THREE–WAY CATALYTIC CONVERTER (TWC) SYSTEM

EC0H7–01
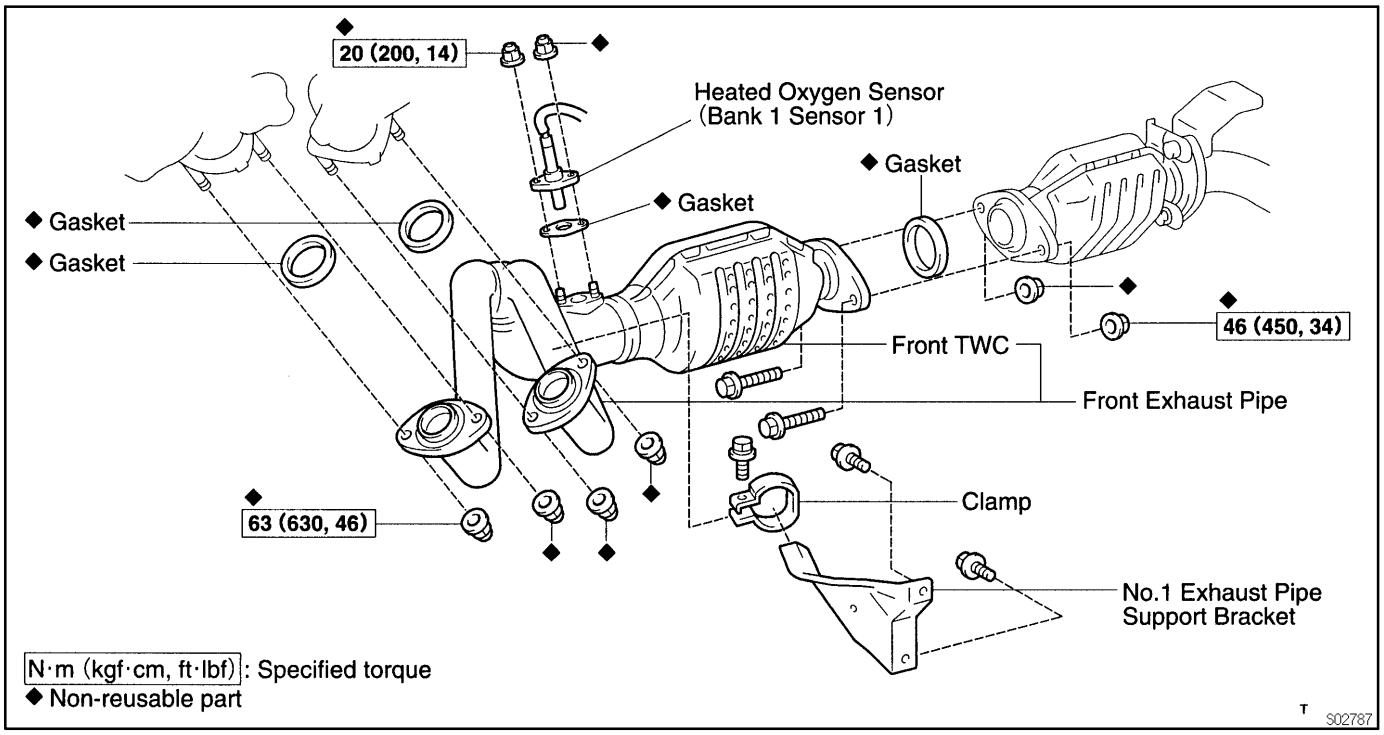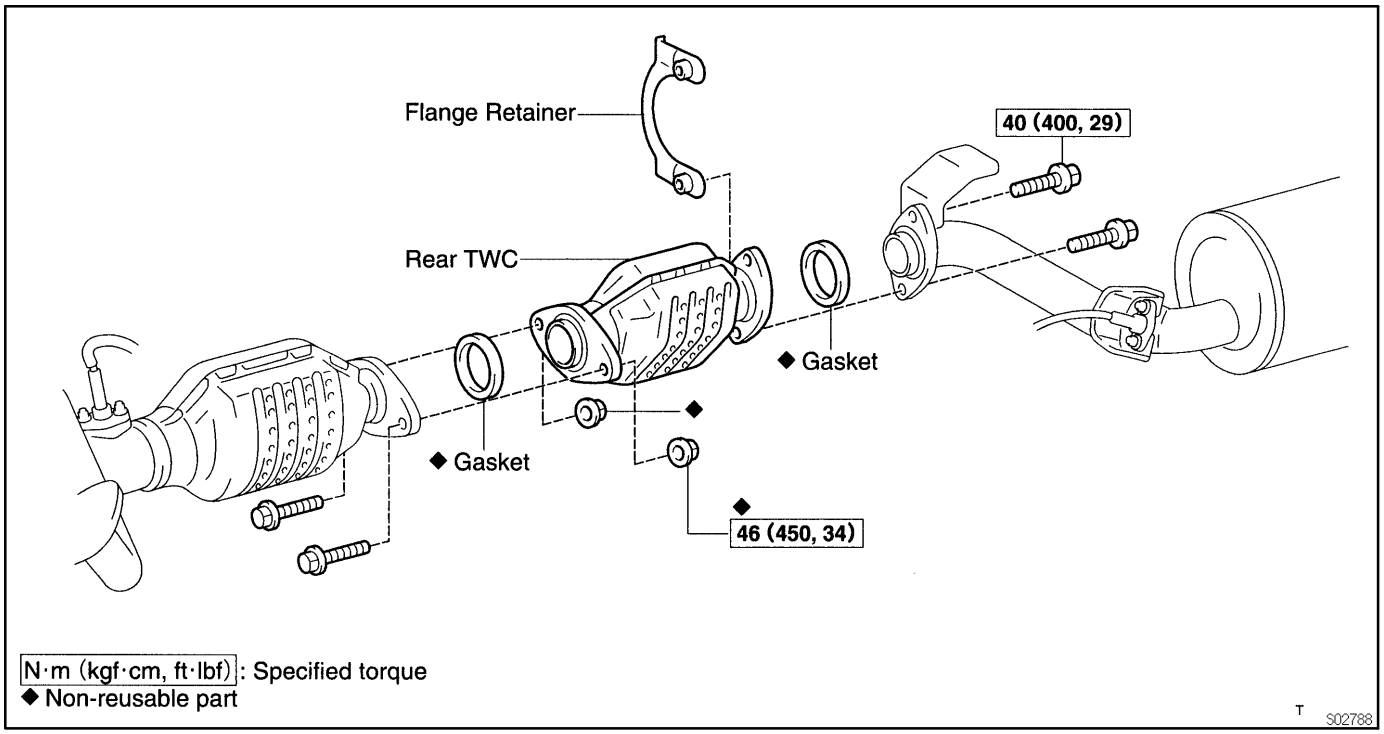
COMPONENTS