AC1KB–01

COMPONENTS

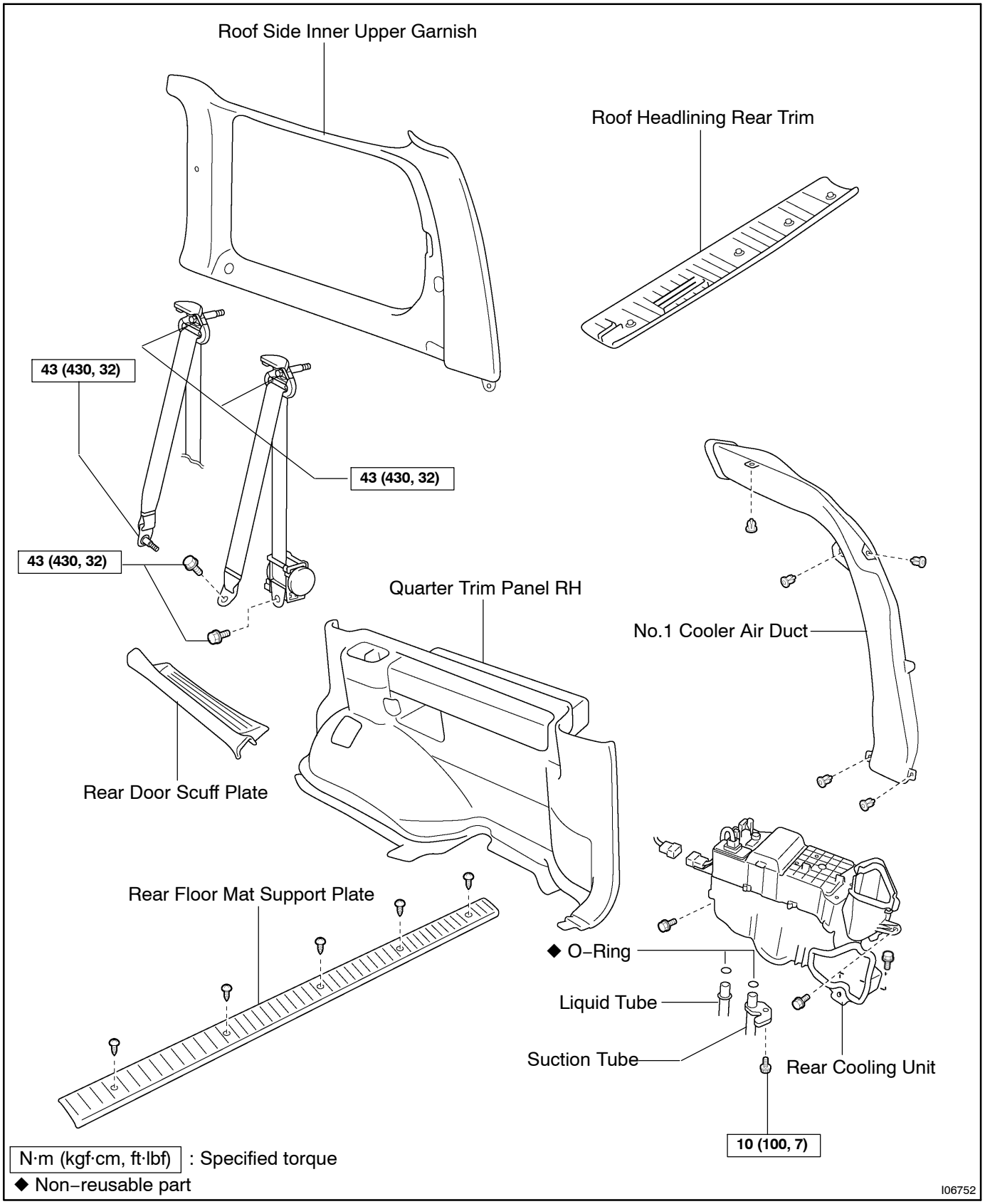

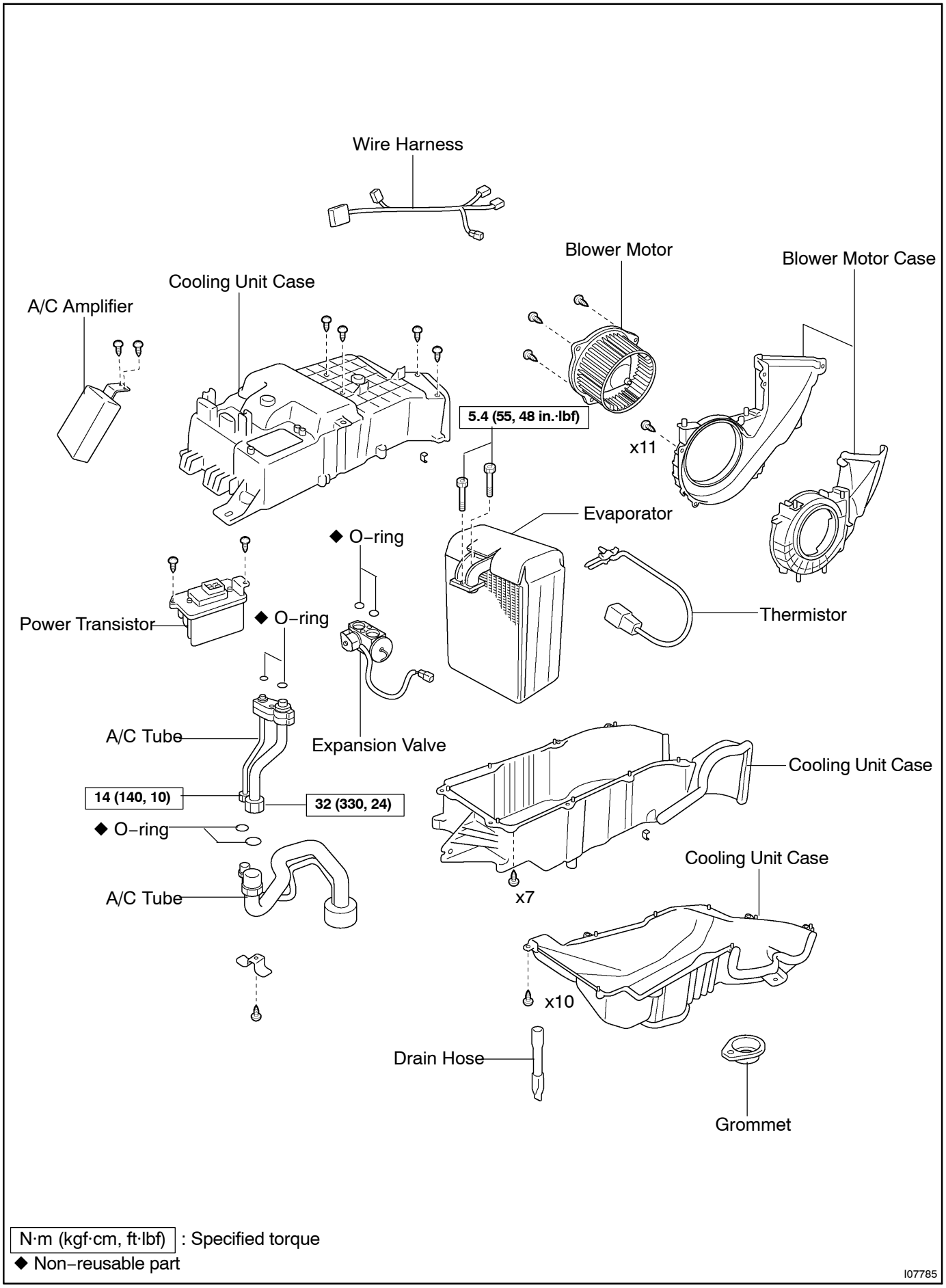
Wire Harness
Blower Motor
Blower Motor Case
Cooling Unit Case
A/C Amplifier
5.4 (55, 48 in.·lbf)
x11
Evaporator
◆ O–ring
Power Transistor
◆ O–ring
Thermistor
A/C Tube
Expansion Valve
Cooling Unit Case
14 (140, 10)
32 (330, 24)
◆ O–ring
Cooling Unit Case
A/C Tube
x7
x10
Drain Hose
Grommet
N·m (kgf·cm, ft·lbf) : Specified torque
◆ Non–reusable part
I07785