TIMING BELT

COMPONENTS

EM0MD–02

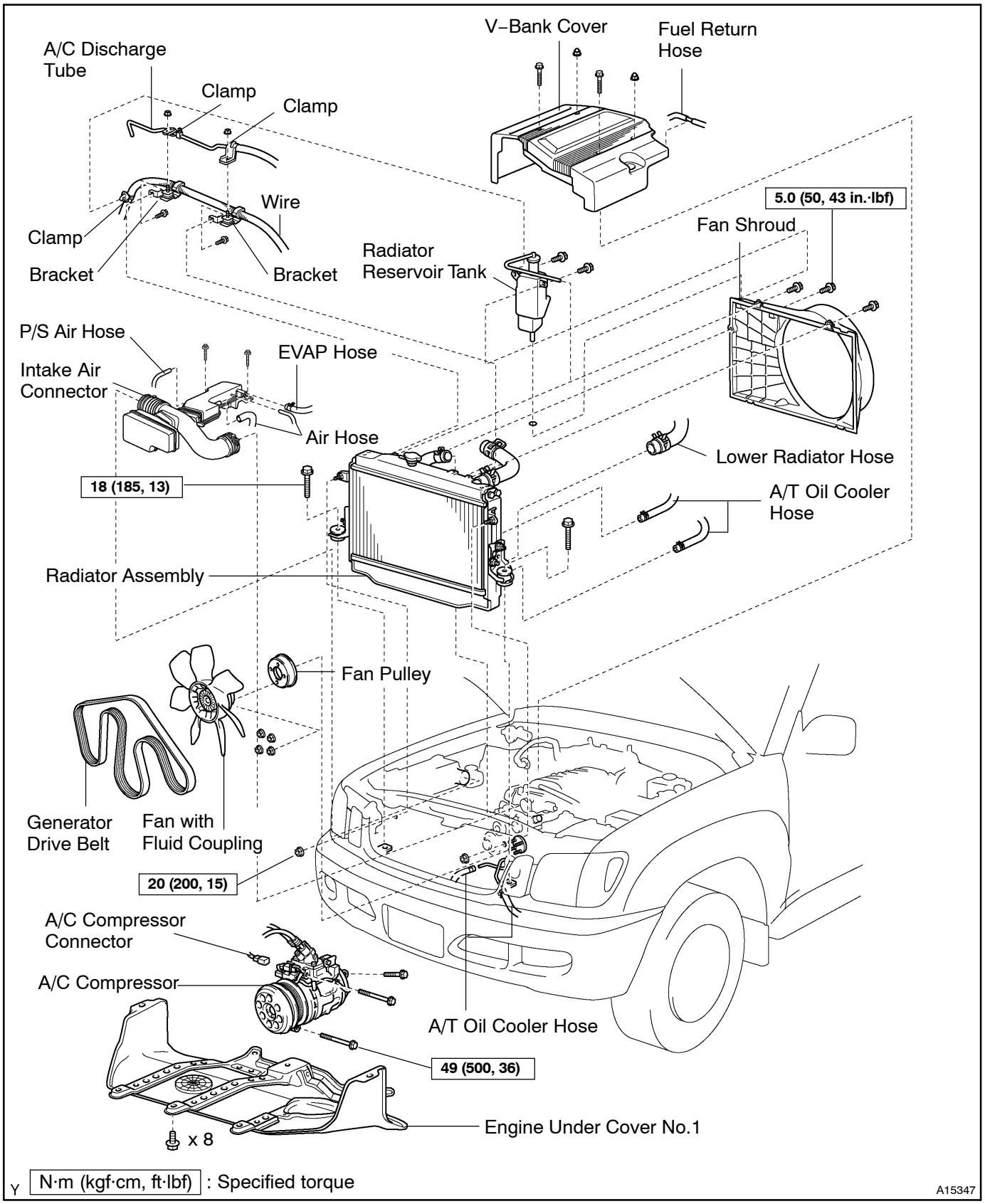

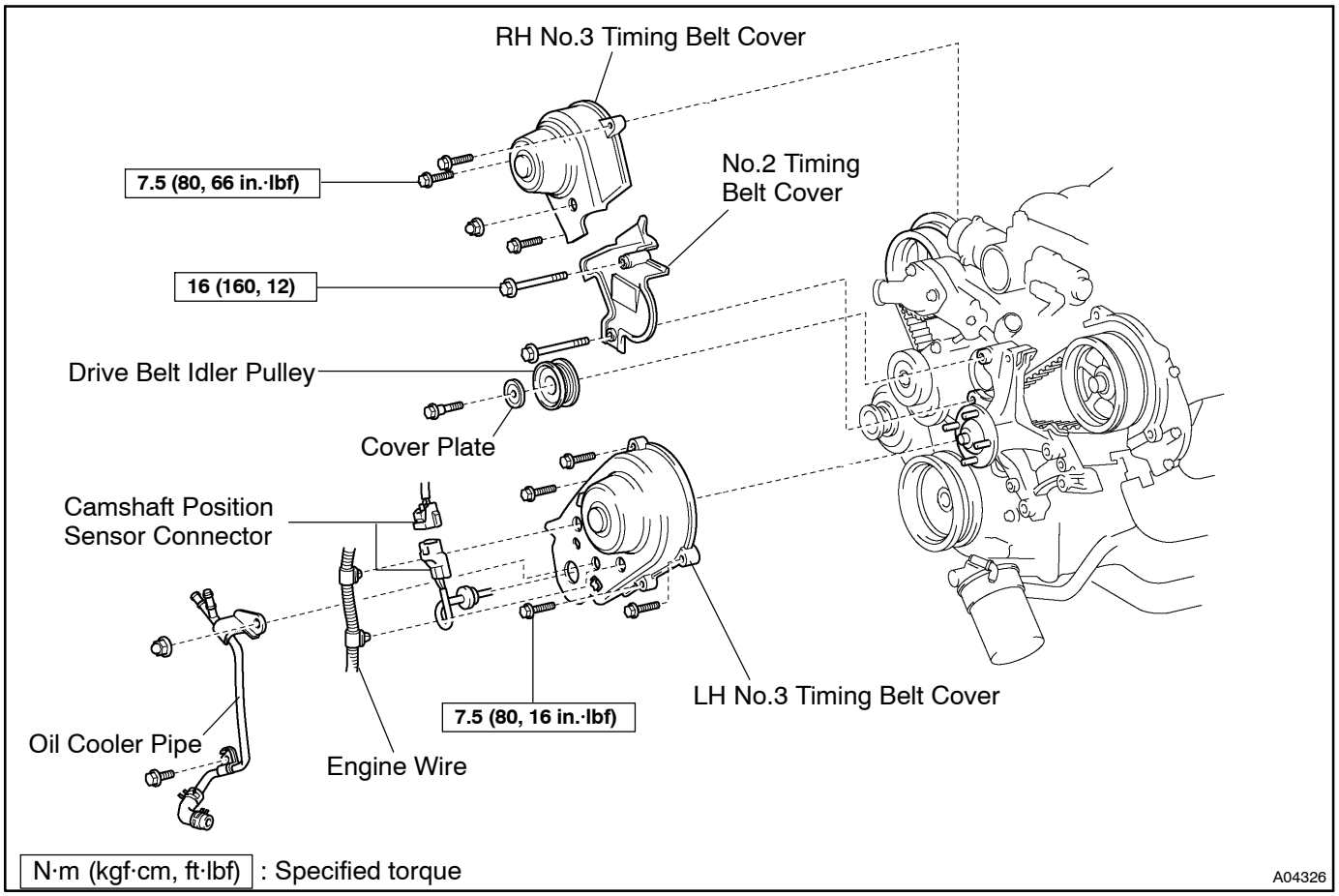
RH No.3 Timing Belt Cover
7.5 (80, 66 in.·lbf)
No.2 Timing Belt Cover
16 (160, 12)
Drive Belt Idler Pulley
Cover Plate
Camshaft Position Sensor Connector
LH No.3 Timing Belt Cover
7.5 (80, 16 in.·lbf)
Oil Cooler Pipe
Engine Wire
N·m (kgf·cm, ft·lbf) : Specified torque
A04326

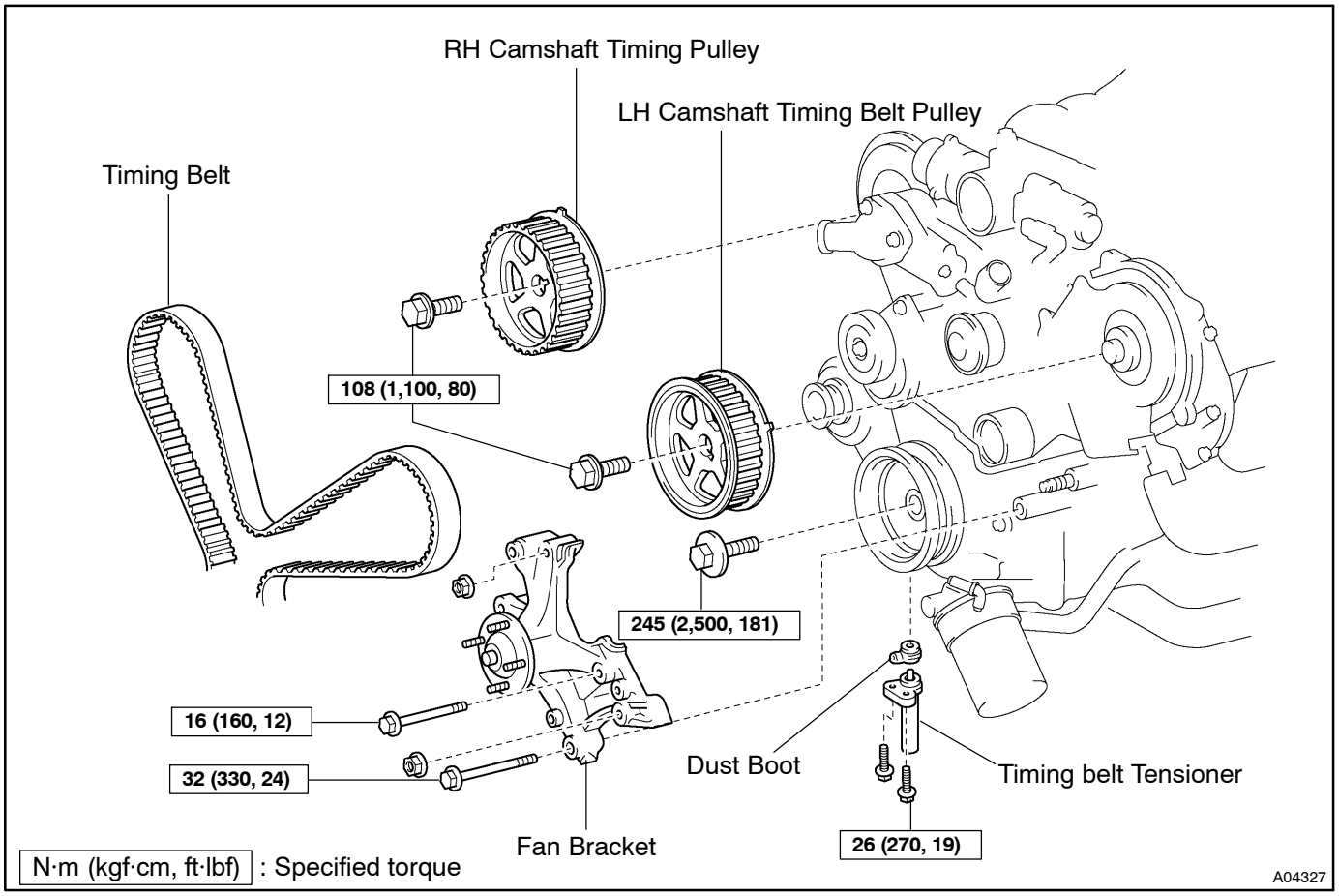
RH Camshaft Timing Pulley
LH Camshaft Timing Belt Pulley
Timing Belt
108 (1,100, 80)
245 (2,500, 181)
16 (160, 12)
32 (330, 24)
Dust Boot
Timing belt Tensioner
Fan Bracket
26 (270, 19)
N·m (kgf·cm, ft·lbf) : Specified torque
A04327

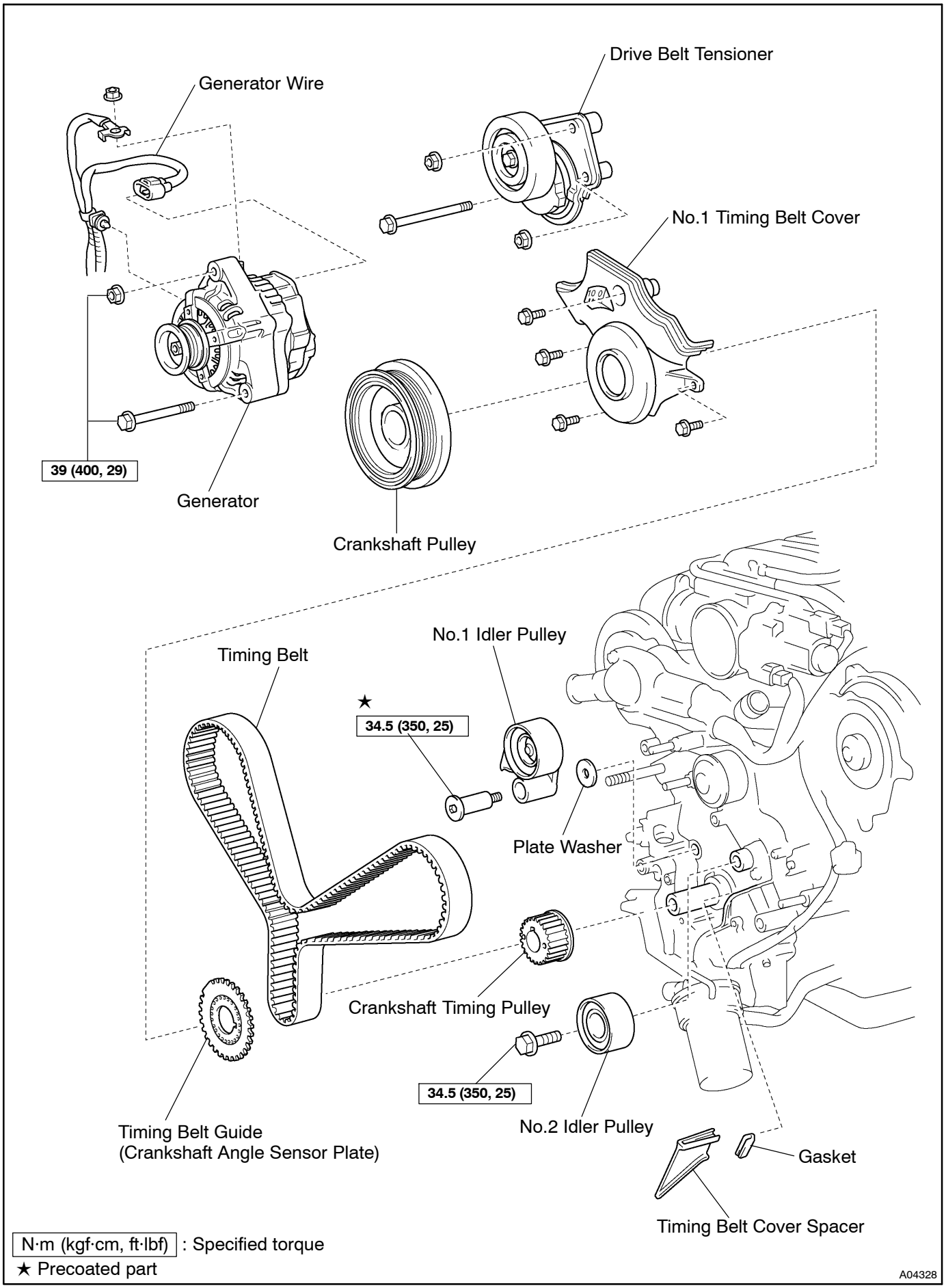
Drive Belt Tensioner
Generator Wire
No.1 Timing Belt Cover
39 (400, 29)
Generator
Crankshaft Pulley
No.1 Idler Pulley
Timing Belt
★
34.5 (350, 25)
Plate Washer
Crankshaft Timing Pulley
34.5 (350, 25)
No.2 Idler Pulley
Timing Belt Guide
(Crankshaft Angle Sensor Plate)
Gasket
Timing Belt Cover Spacer
N·m (kgf·cm, ft·lbf) : Specified torque
★ Precoated part
A04328