BE0TT–04
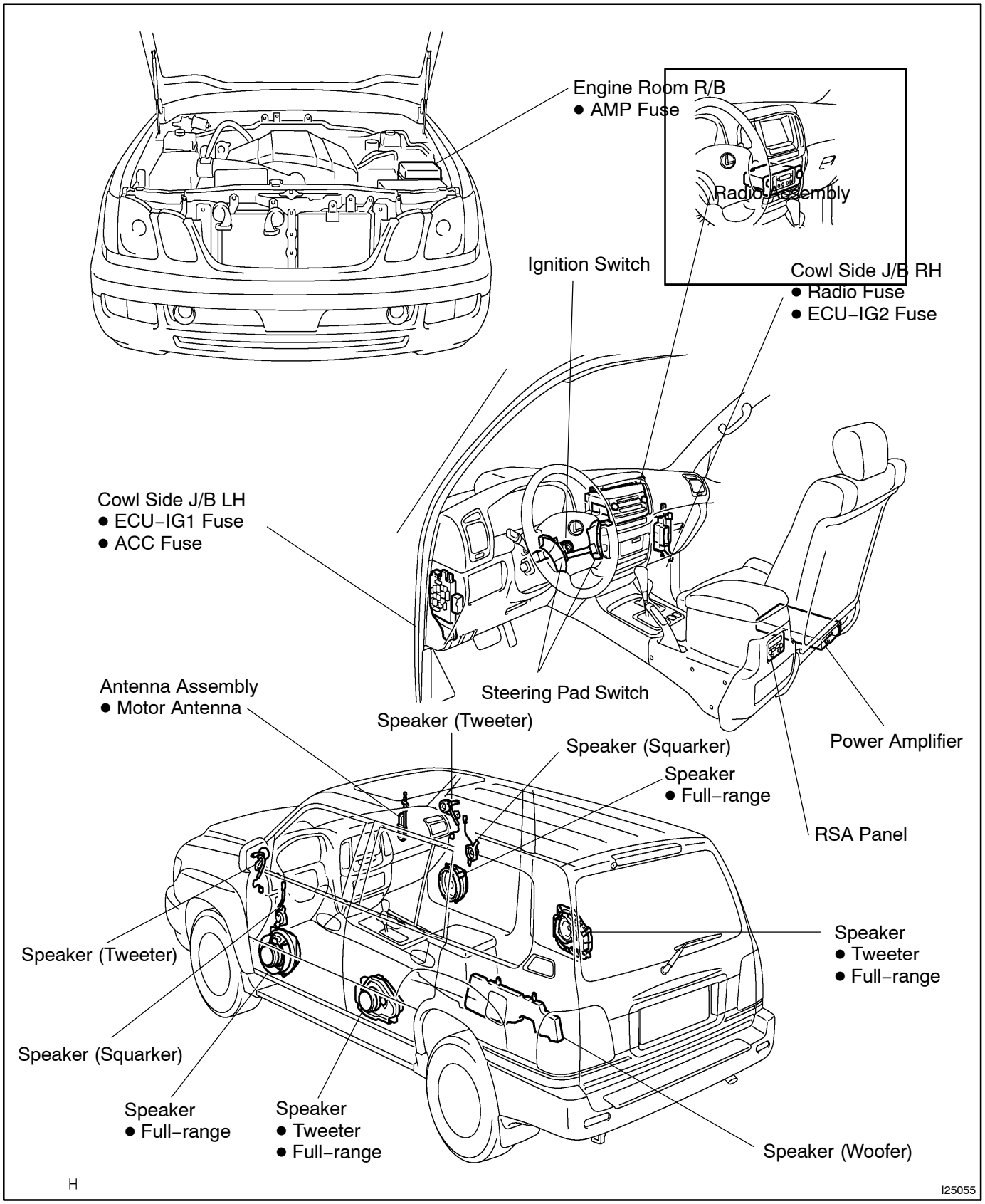
LOCATION