FRONT DIFFERENTIAL CARRIER

COMPONENTS

SA1SF–02

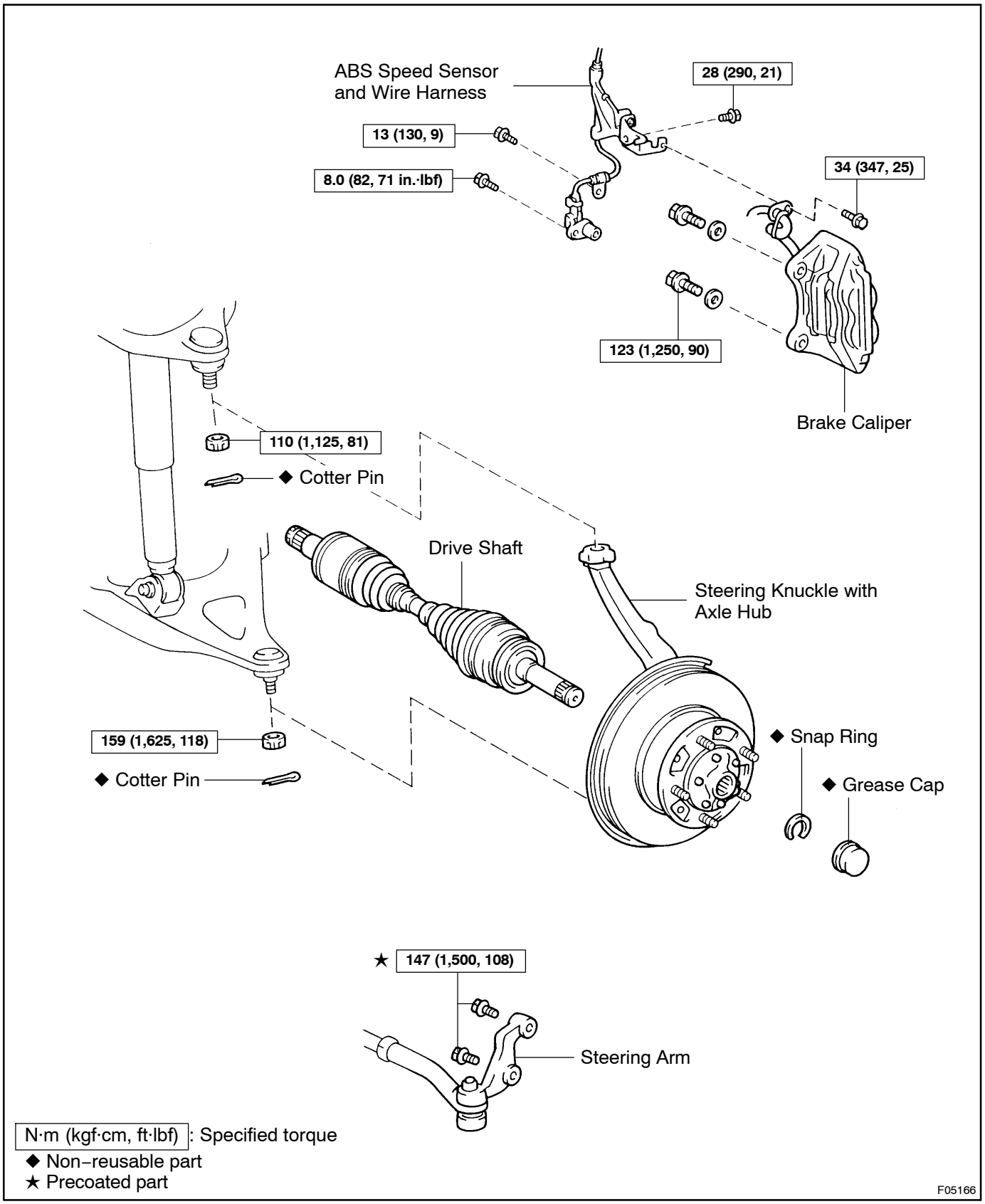

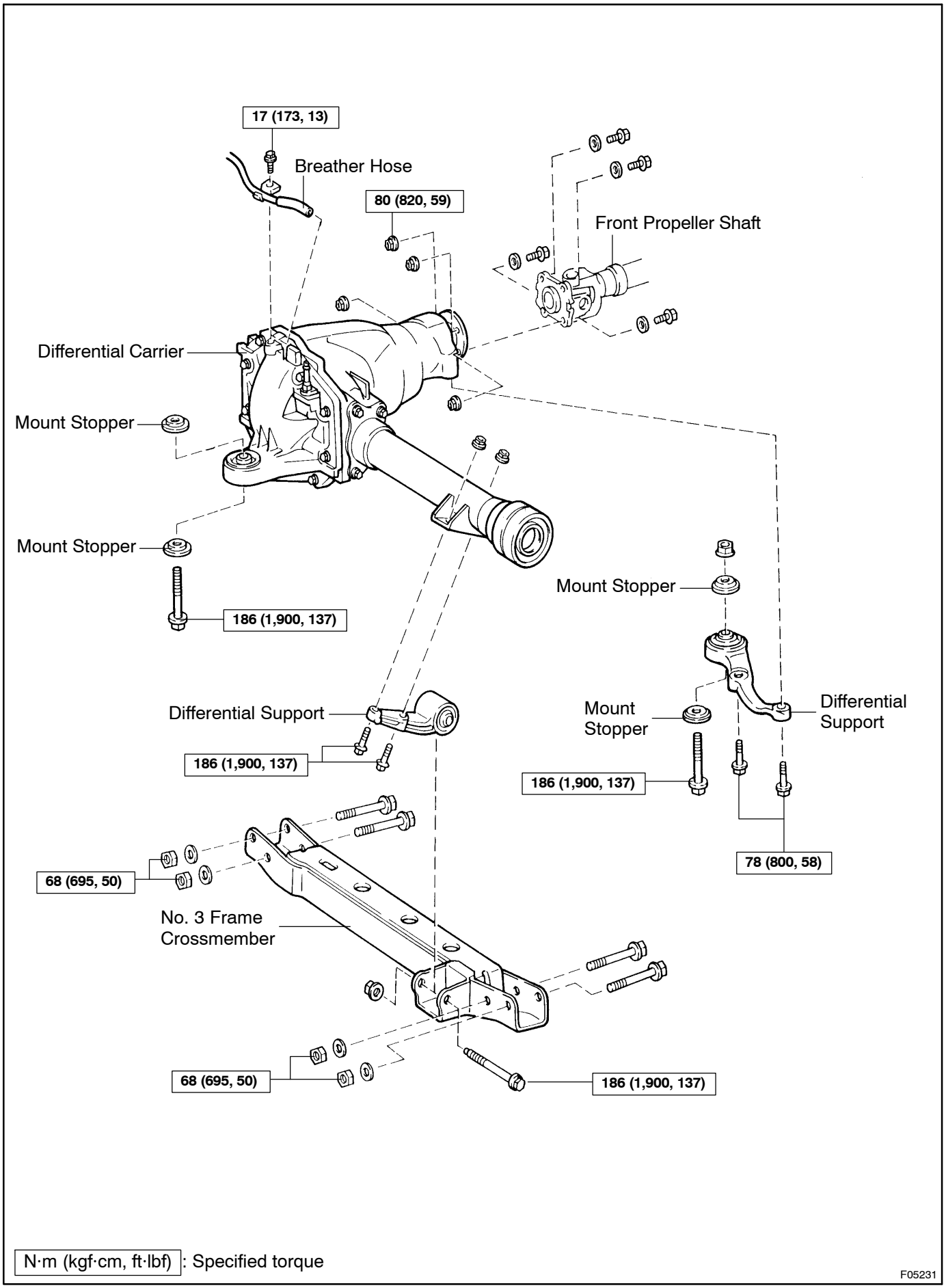
17 (173, 13)
Breather Hose
80 (820, 59)
Front Propeller Shaft
Differential Carrier
Mount Stopper
Mount Stopper
186 (1,900, 137)
Mount Stopper
Differential Support
186 (1,900, 137)
Mount Stopper
Differential Support
186 (1,900, 137)
78 (800, 58)
68 (695, 50)
No. 3 Frame Crossmember
68 (695, 50)
186 (1,900, 137)
N·m (kgf·cm, ft·lbf) : Specified torque
F05231

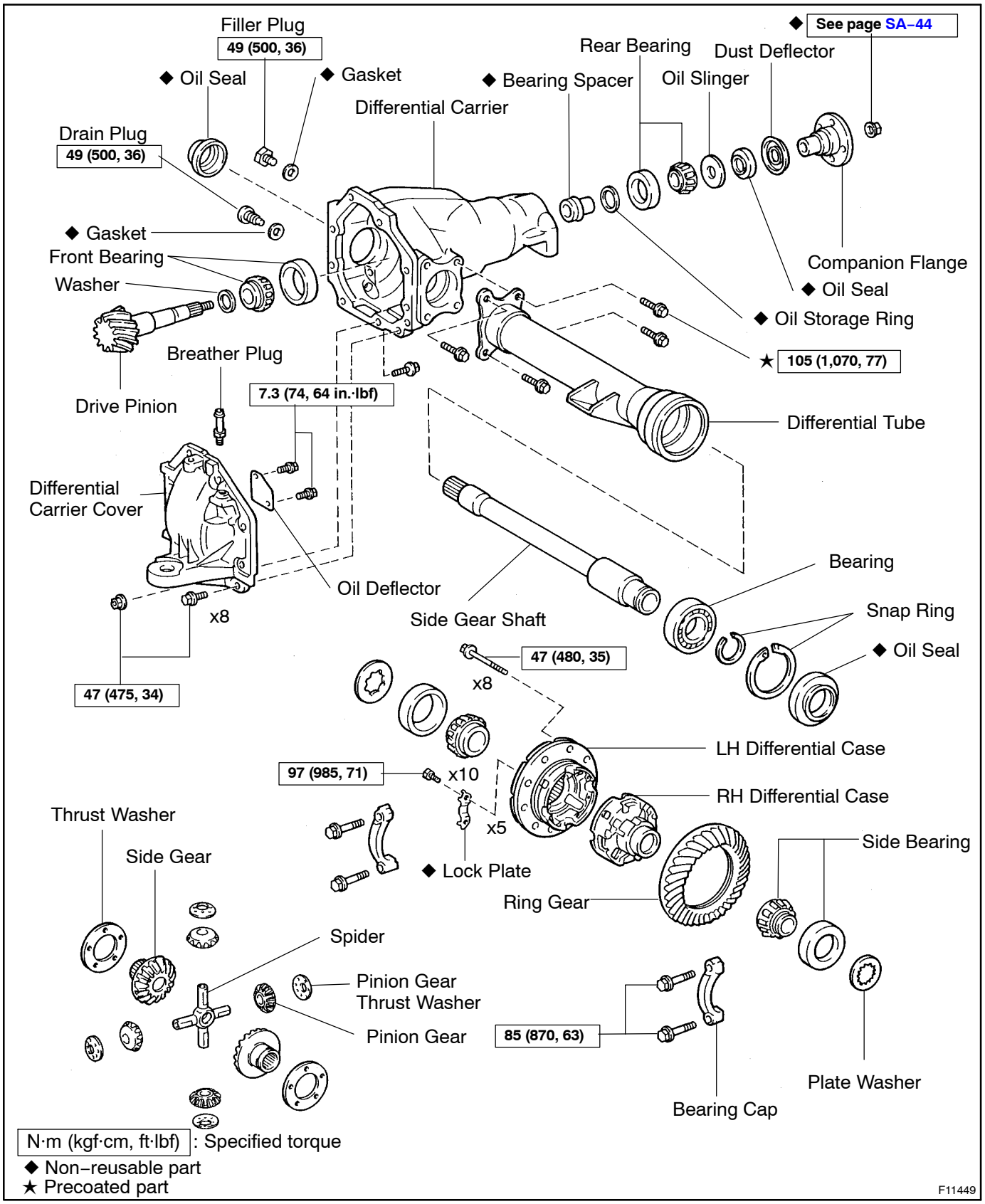
Filler Plug
49 (500, 36)
◆ Oil Seal
◆ Gasket
Differential Carrier
◆ Bearing Spacer
Rear Bearing
Oil Slinger
Dust Deflector
◆ See page SA–44
Drain Plug
49 (500, 36)
◆ Gasket
Front Bearing
Washer
Companion Flange
◆ Oil Seal
◆ Oil Storage Ring
★ 105 (1,070, 77)
Breather Plug
7.3 (74, 64 in.·lbf)
Drive Pinion
Differential Tube
Differential
Carrier Cover
Oil Deflector
x8
Side Gear Shaft
Bearing
Snap Ring
◆ Oil Seal
47 (480, 35)
x8
47 (475, 34)
LH Differential Case
97 (985, 71)
x10
RH Differential Case
x5
Thrust Washer
Side Gear
◆ Lock Plate
Side Bearing
Ring Gear
Spider
Pinion Gear
Thrust Washer
Pinion Gear
85 (870, 63)
Plate Washer
Bearing Cap
N·m (kgf·cm, ft·lbf) : Specified torque
◆ Non–reusable part
★ Precoated part
F11449