QUARTER WINDOW GLASS

COMPONENTS
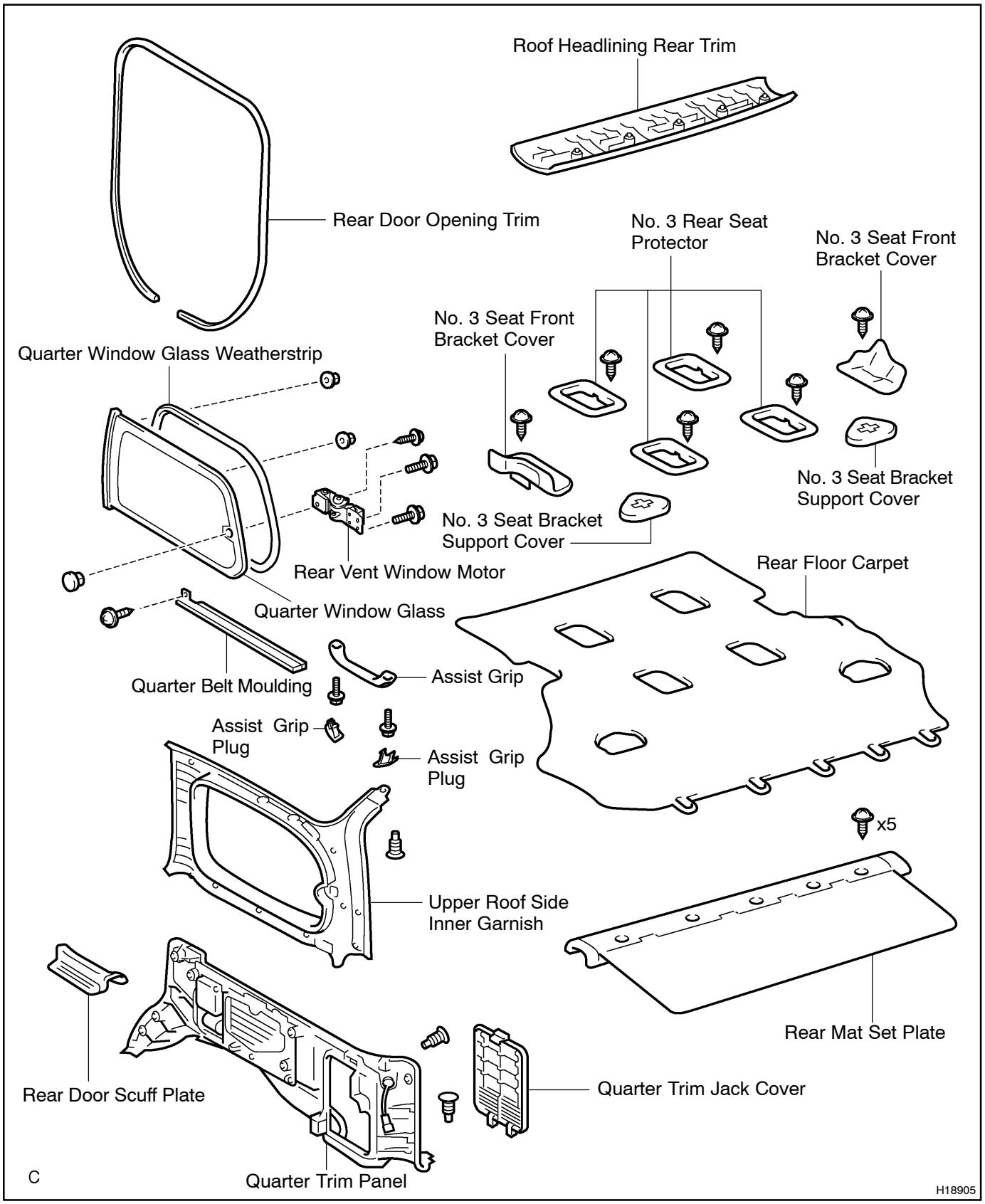
BO1MY–04