REAR BUMPER

COMPONENTS
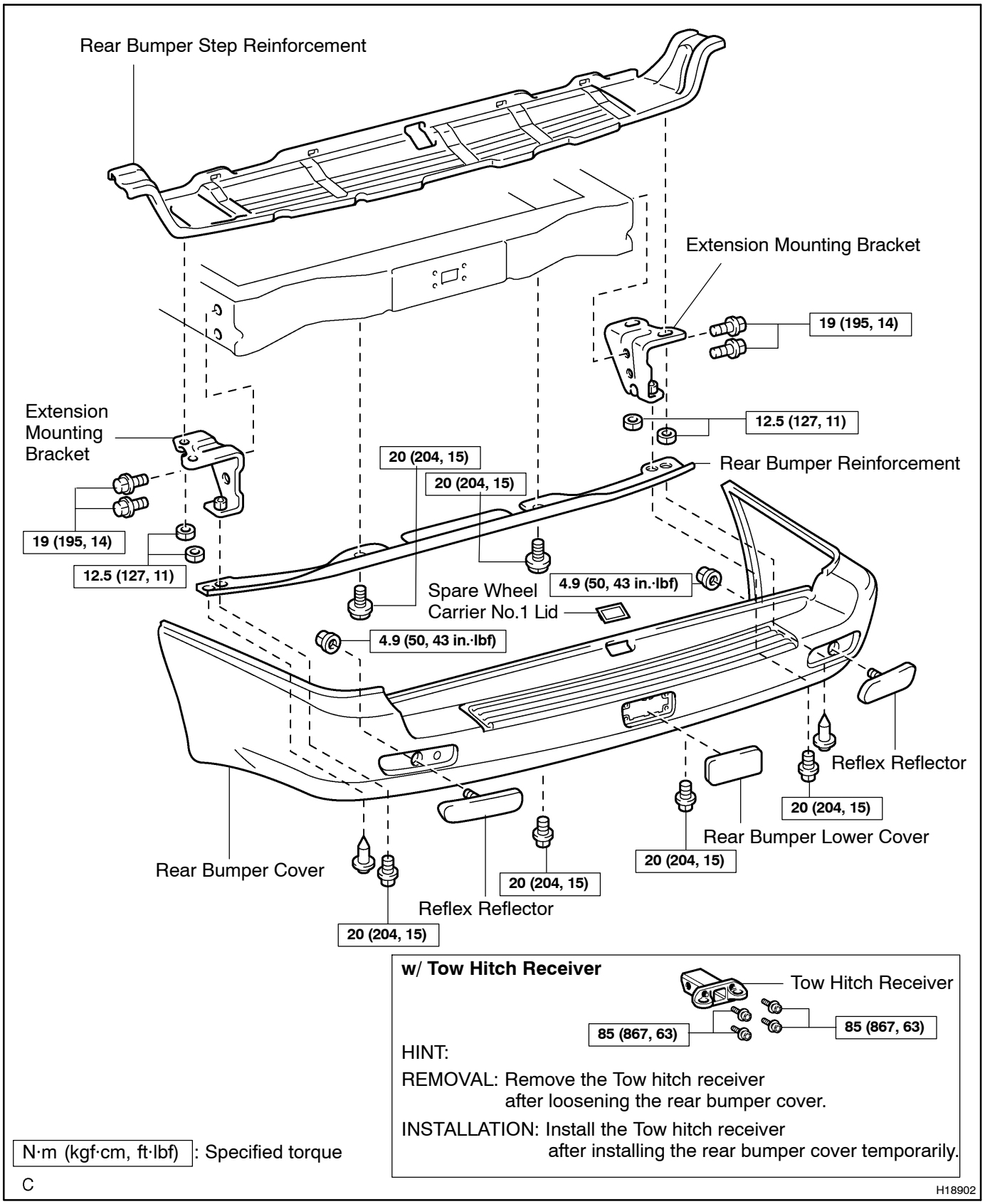
BO1N4–03