M OVERALL ELECTRICAL WIRING DIAGRAM

(Cont. next Page)

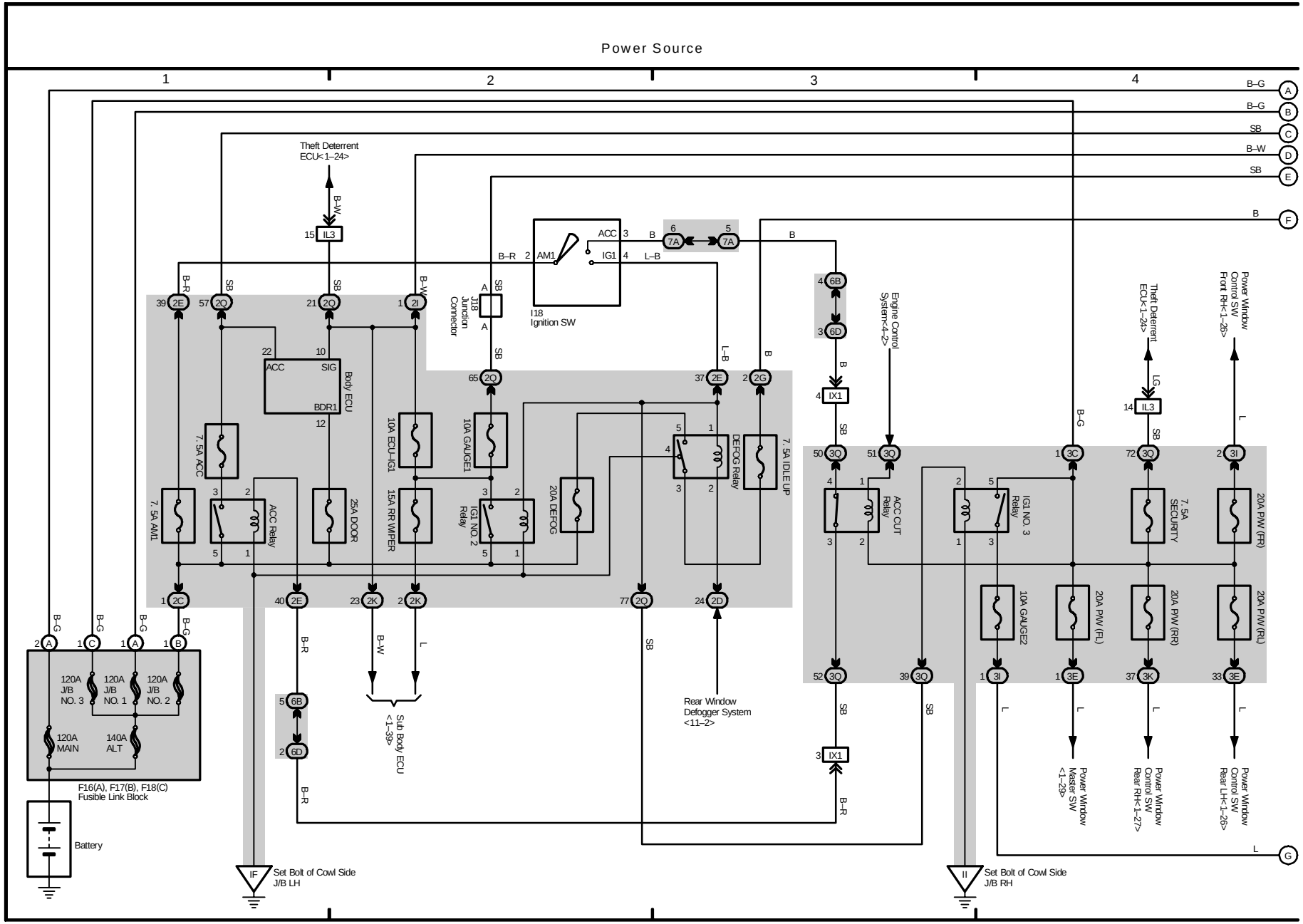

(Cont. next page)

Multiplex Communication System

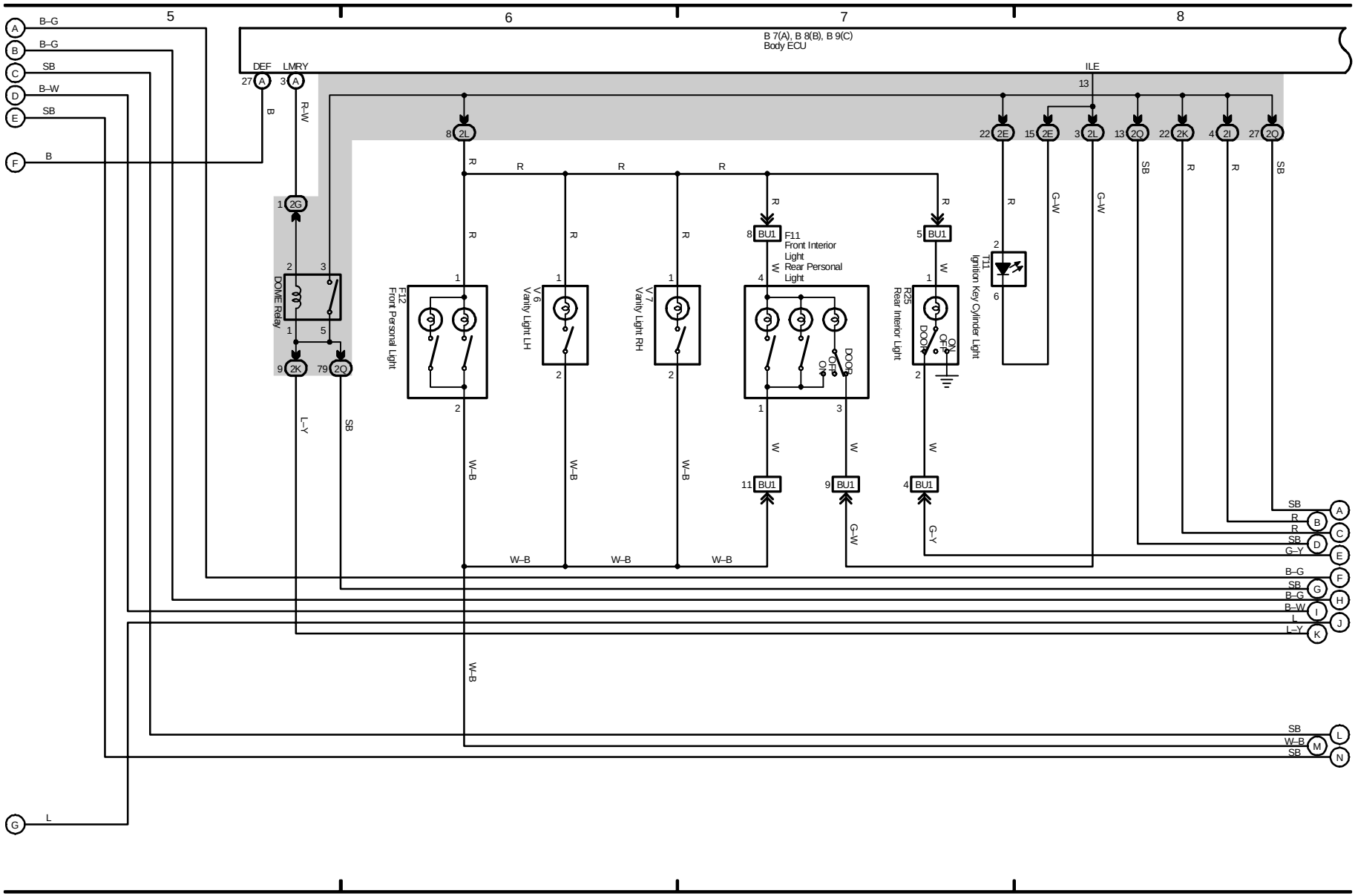

(Cont. next page)

Multiplex Communication System

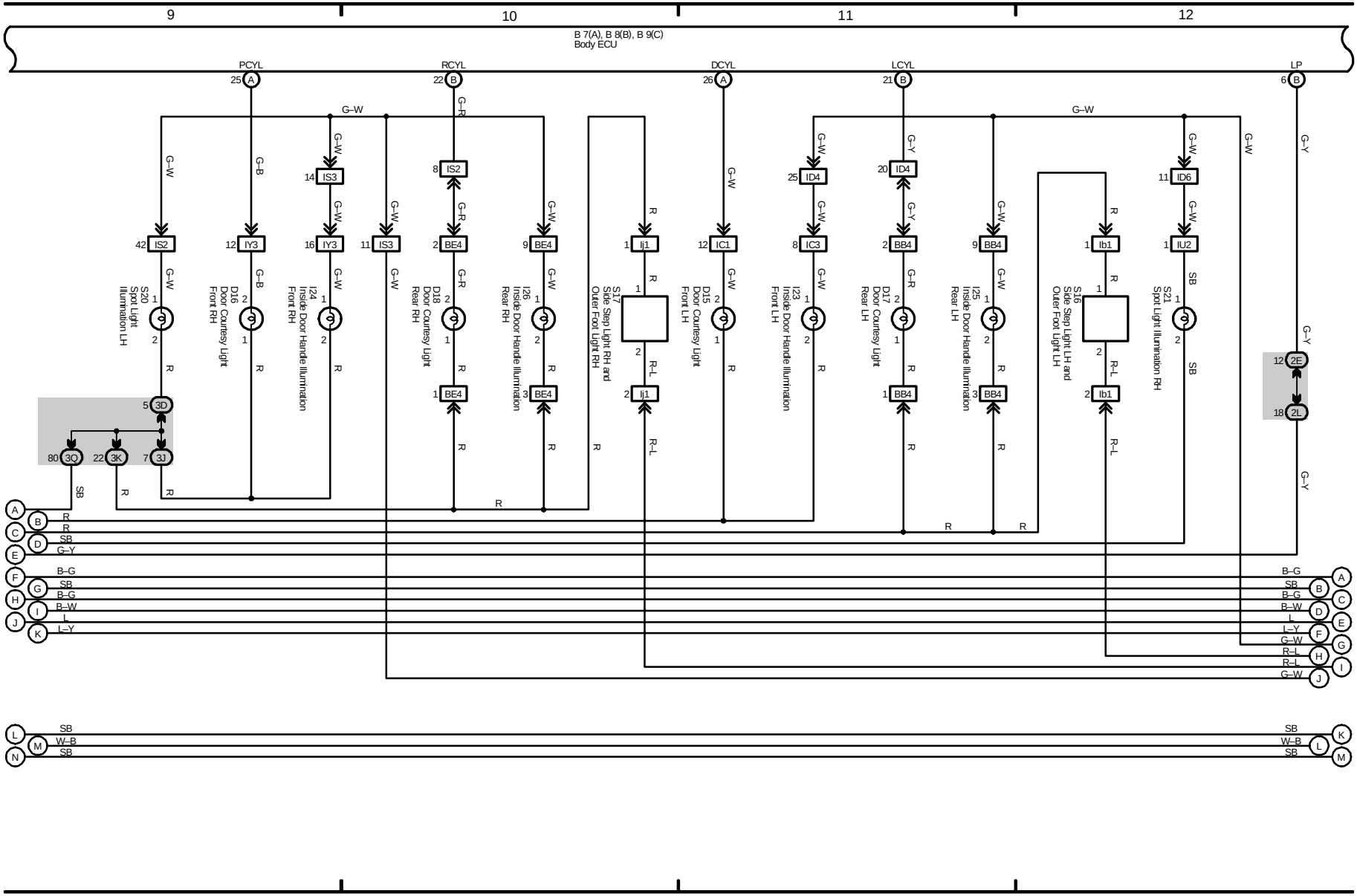

(Cont. next page)

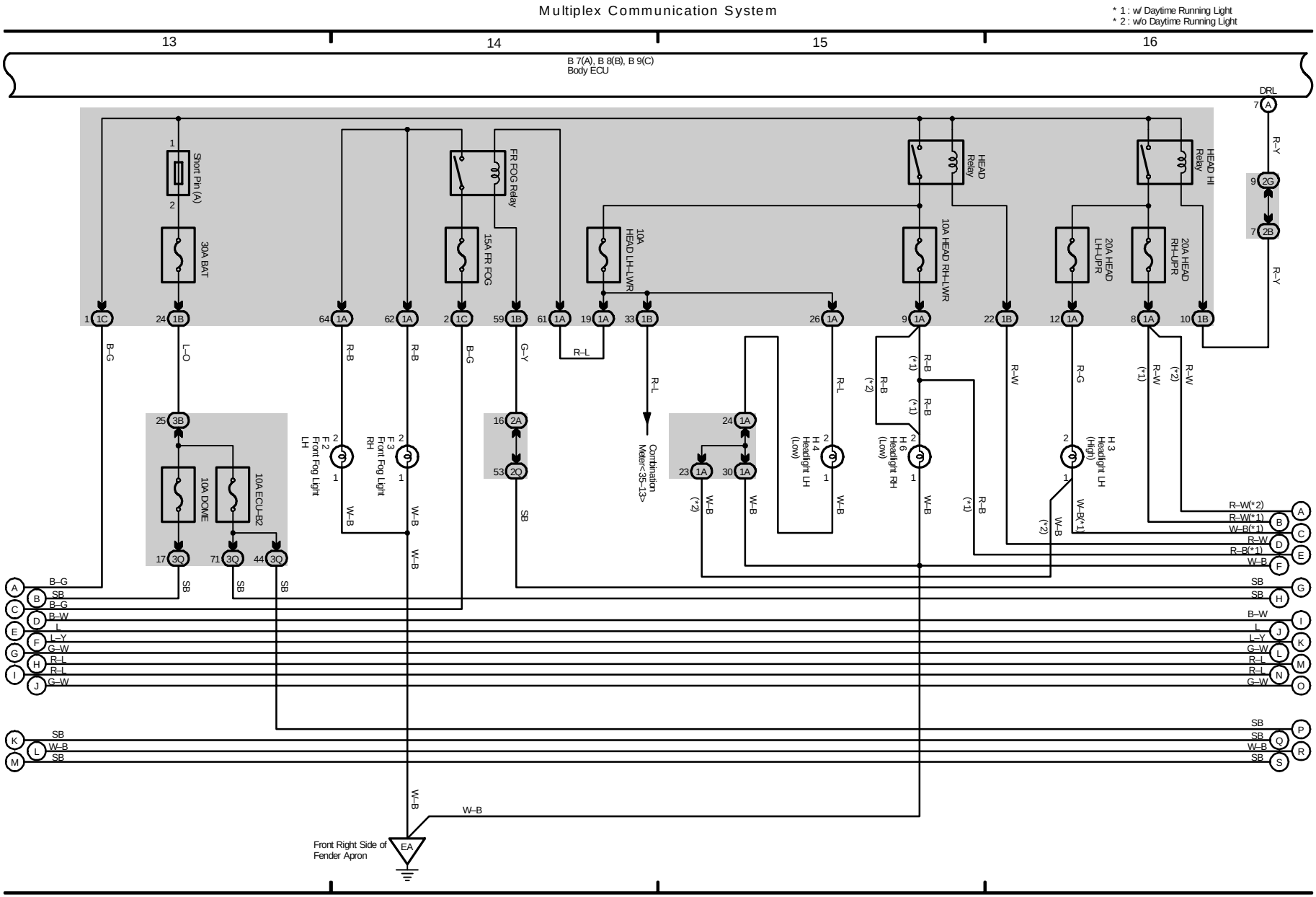

(Cont. next page)

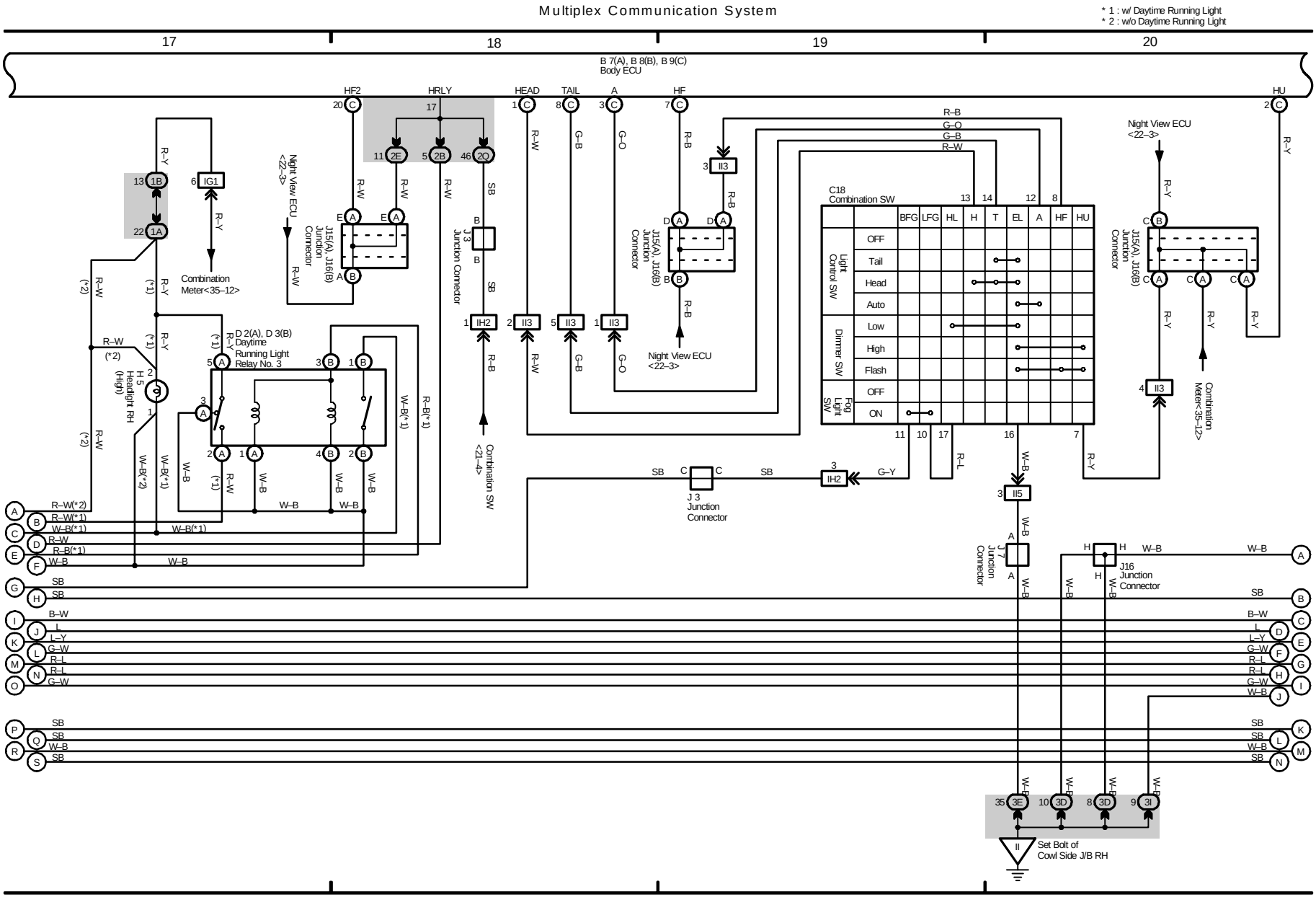

(Cont. next page)

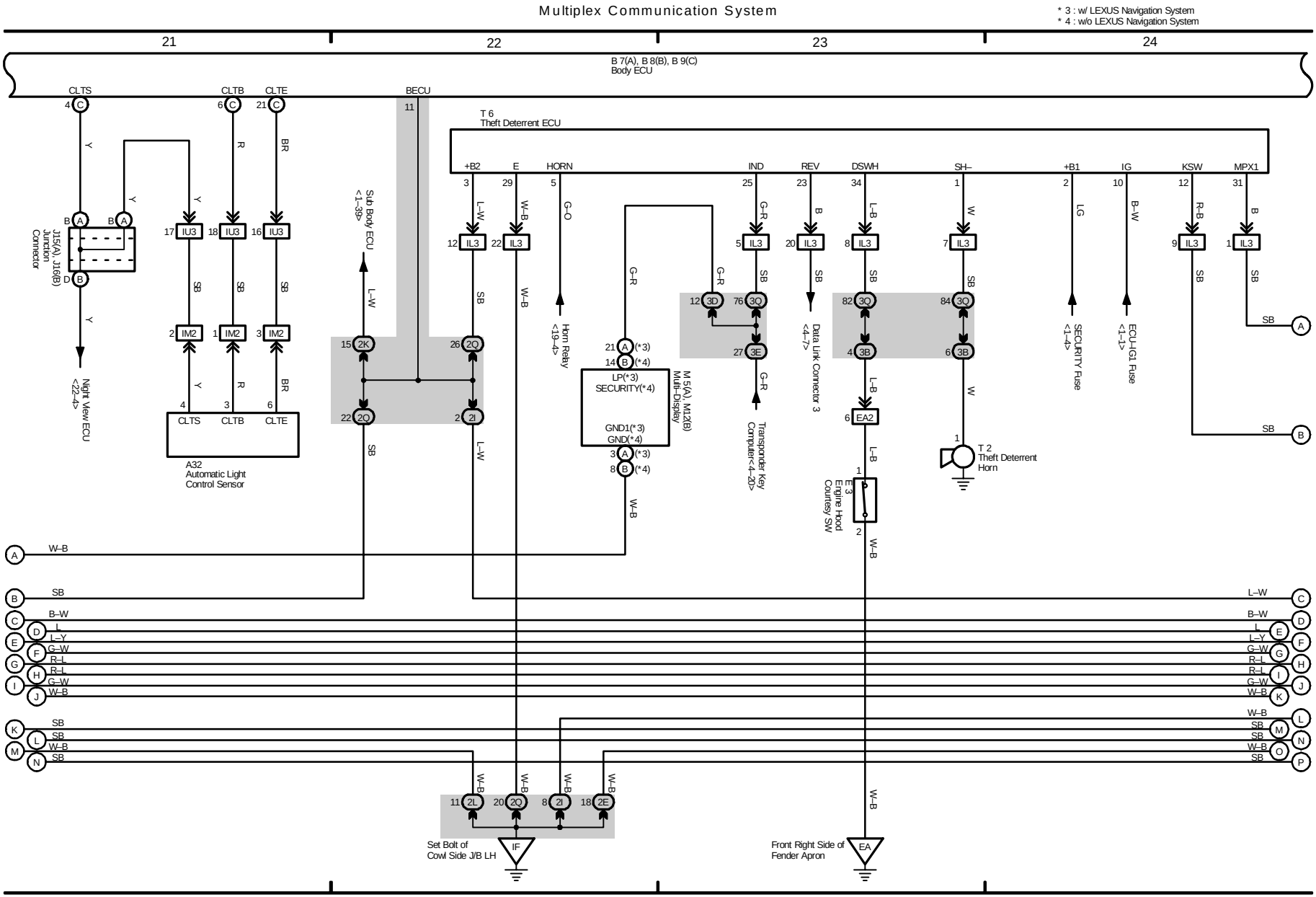

(Cont. next page)

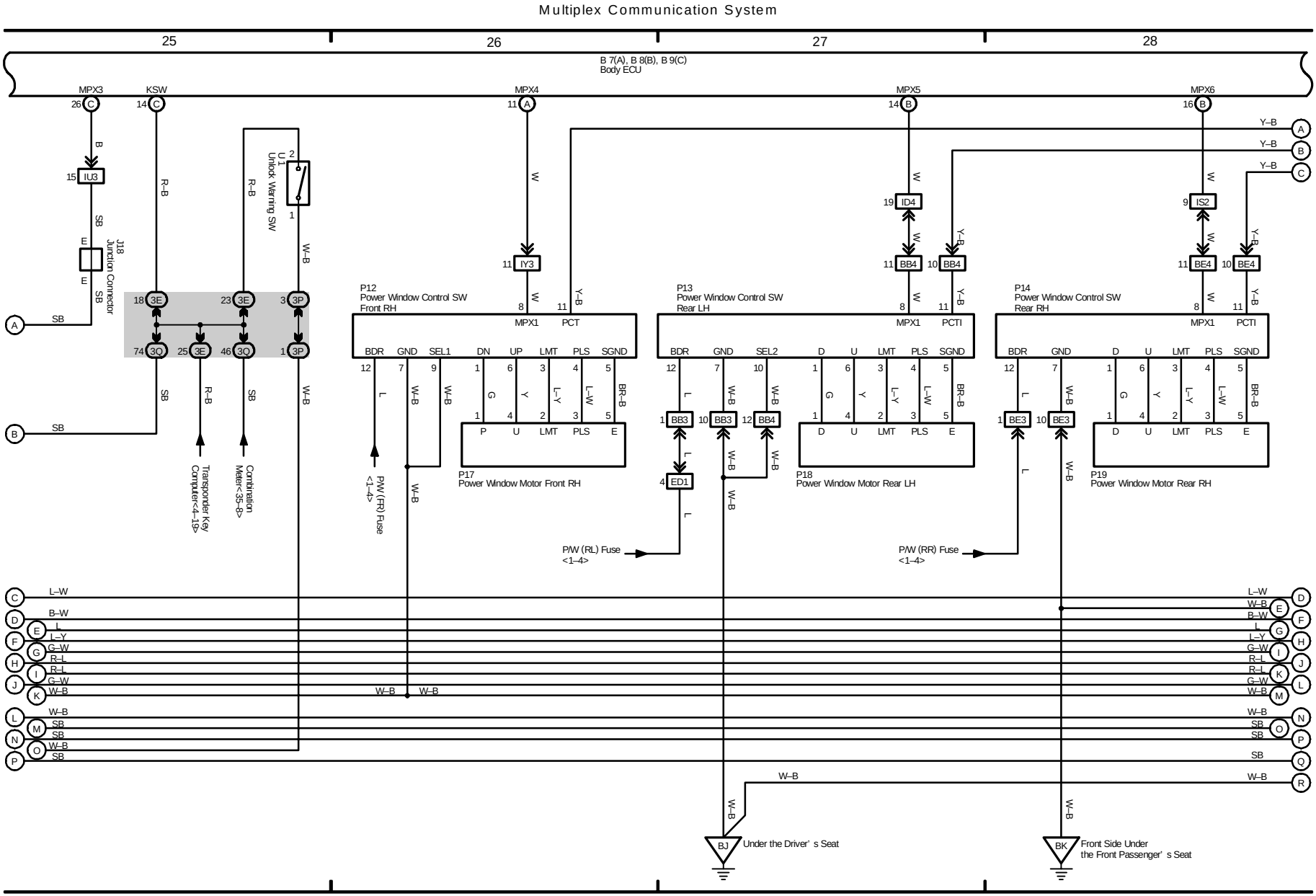

(Cont. next page)

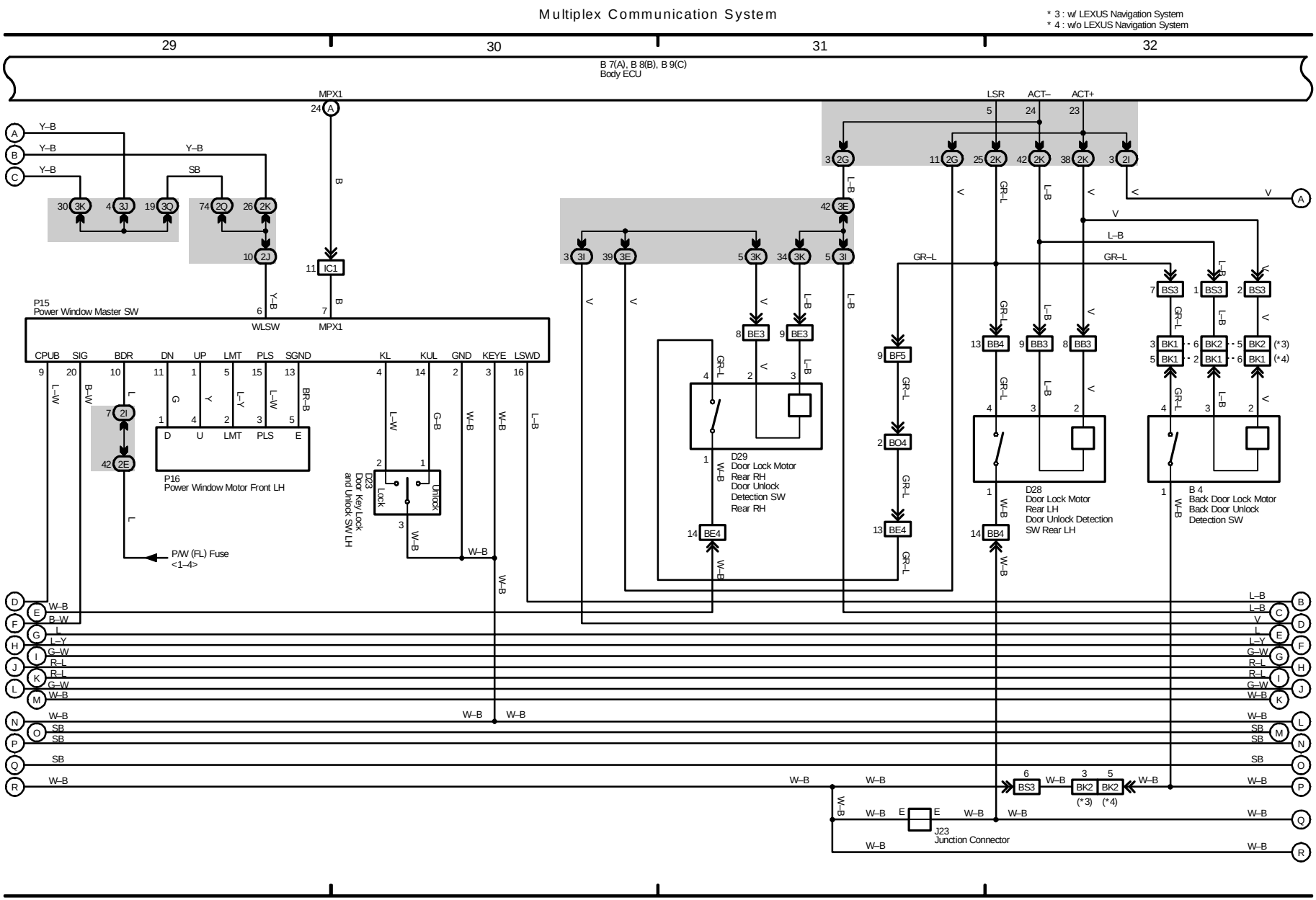

(Cont. next page)

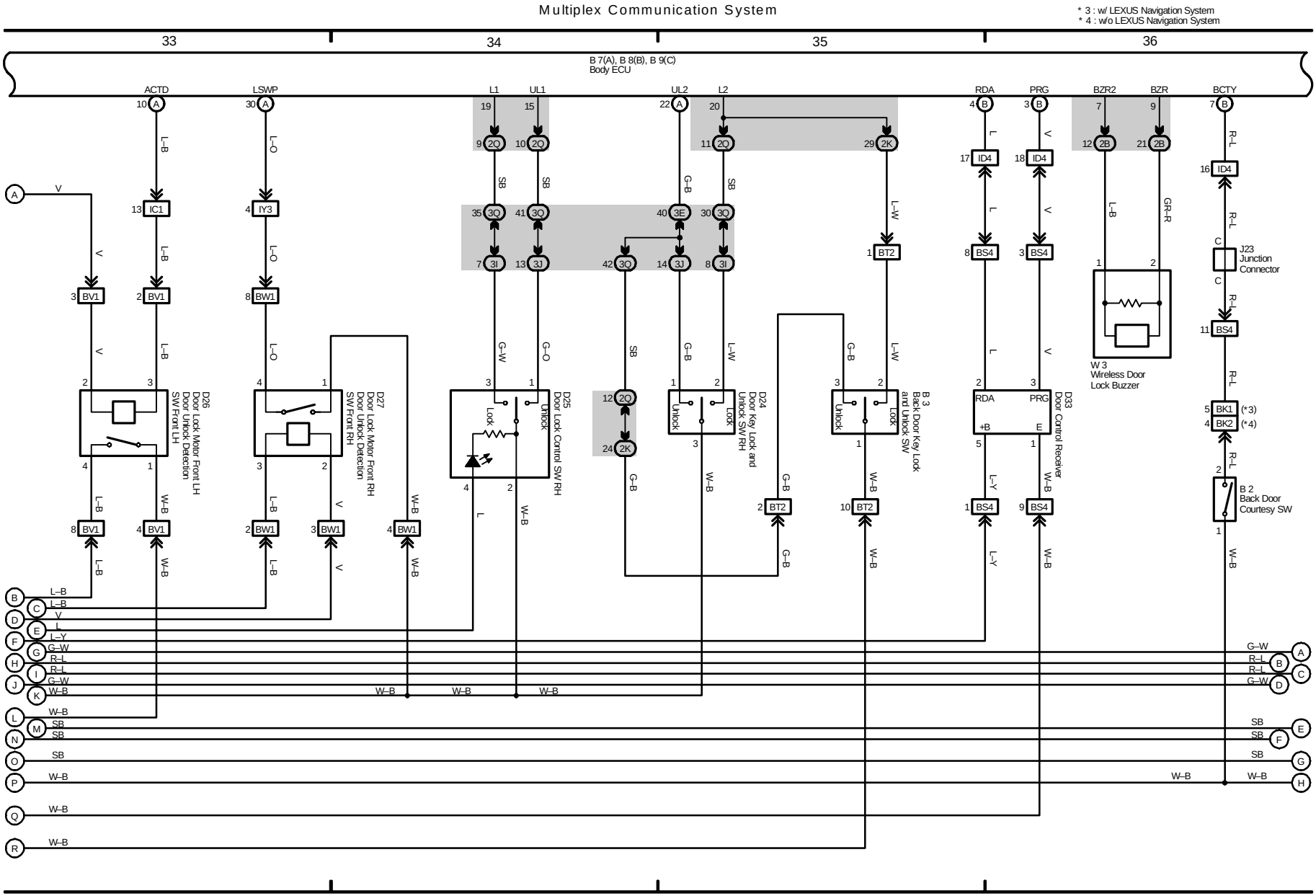

(Cont. next page)

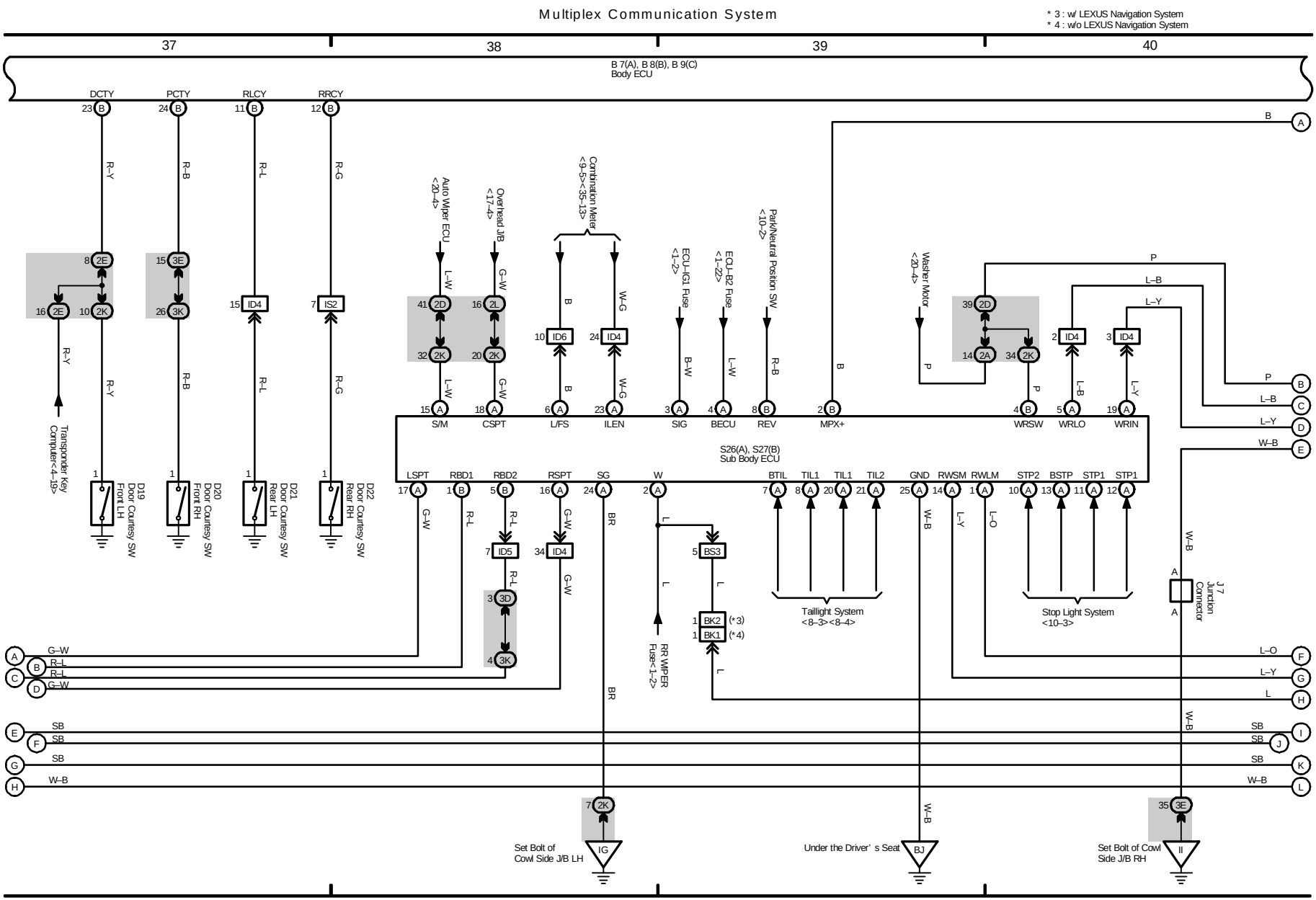

(Cont. next page)

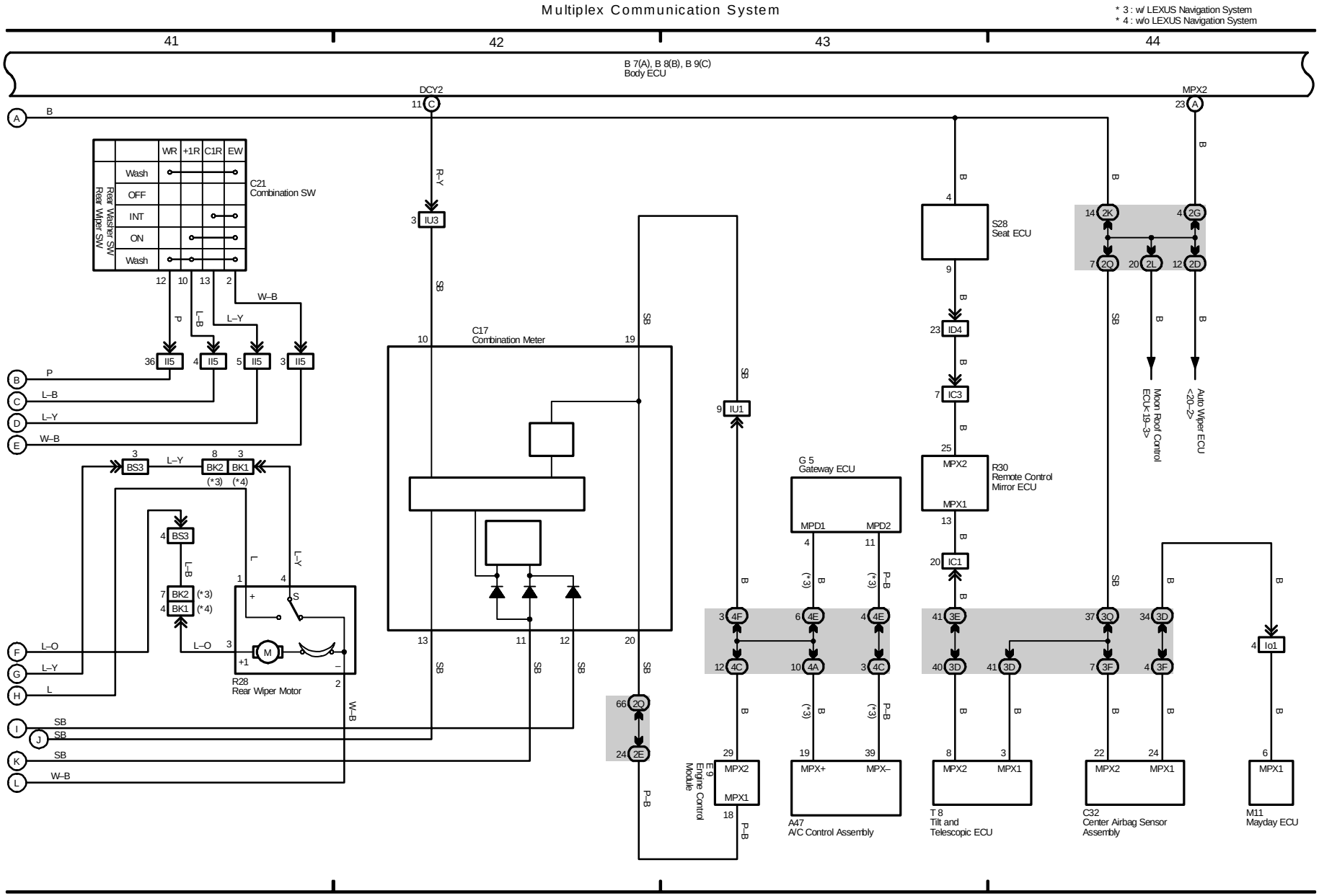

1 LX 470 (Cont' d)

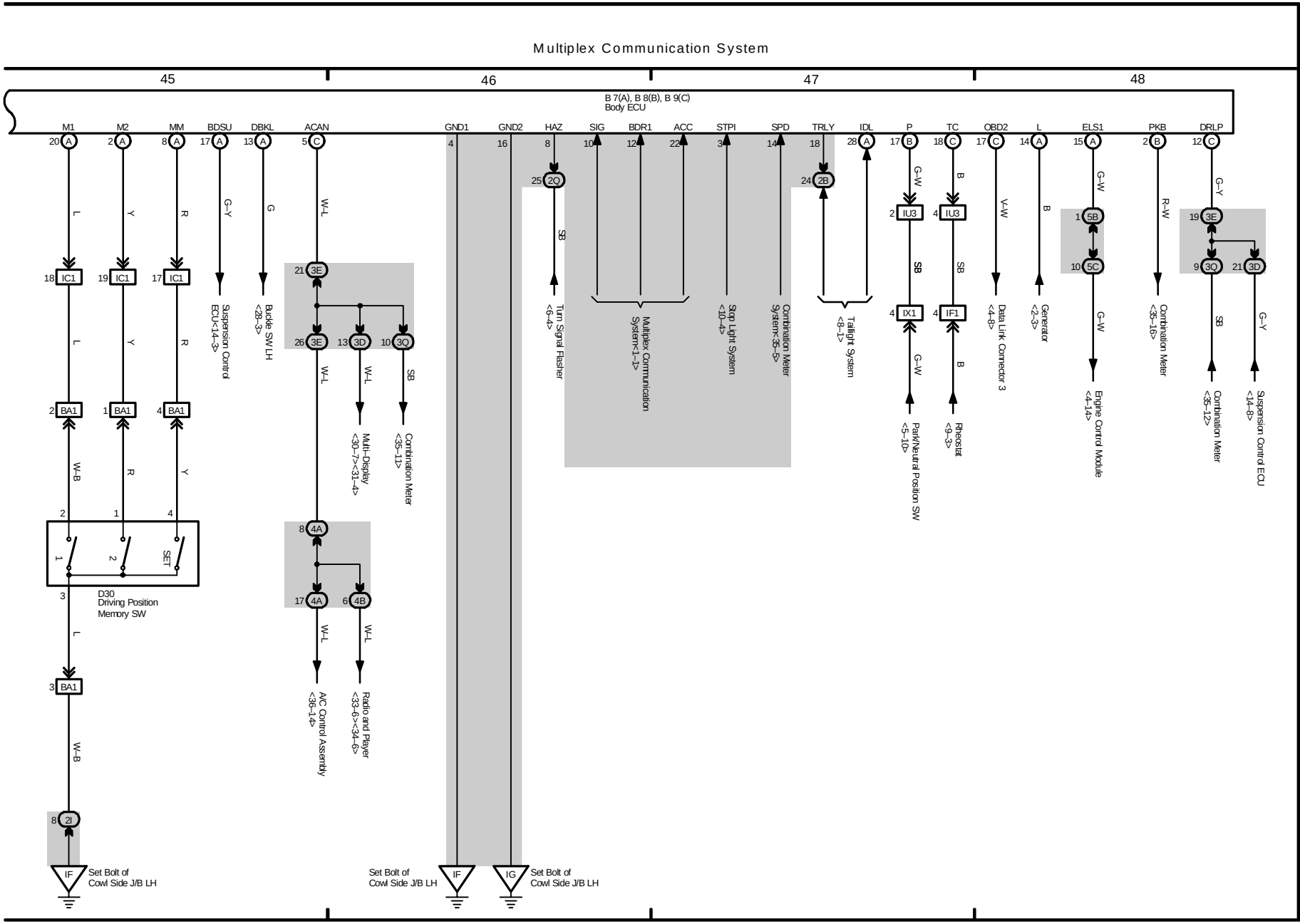

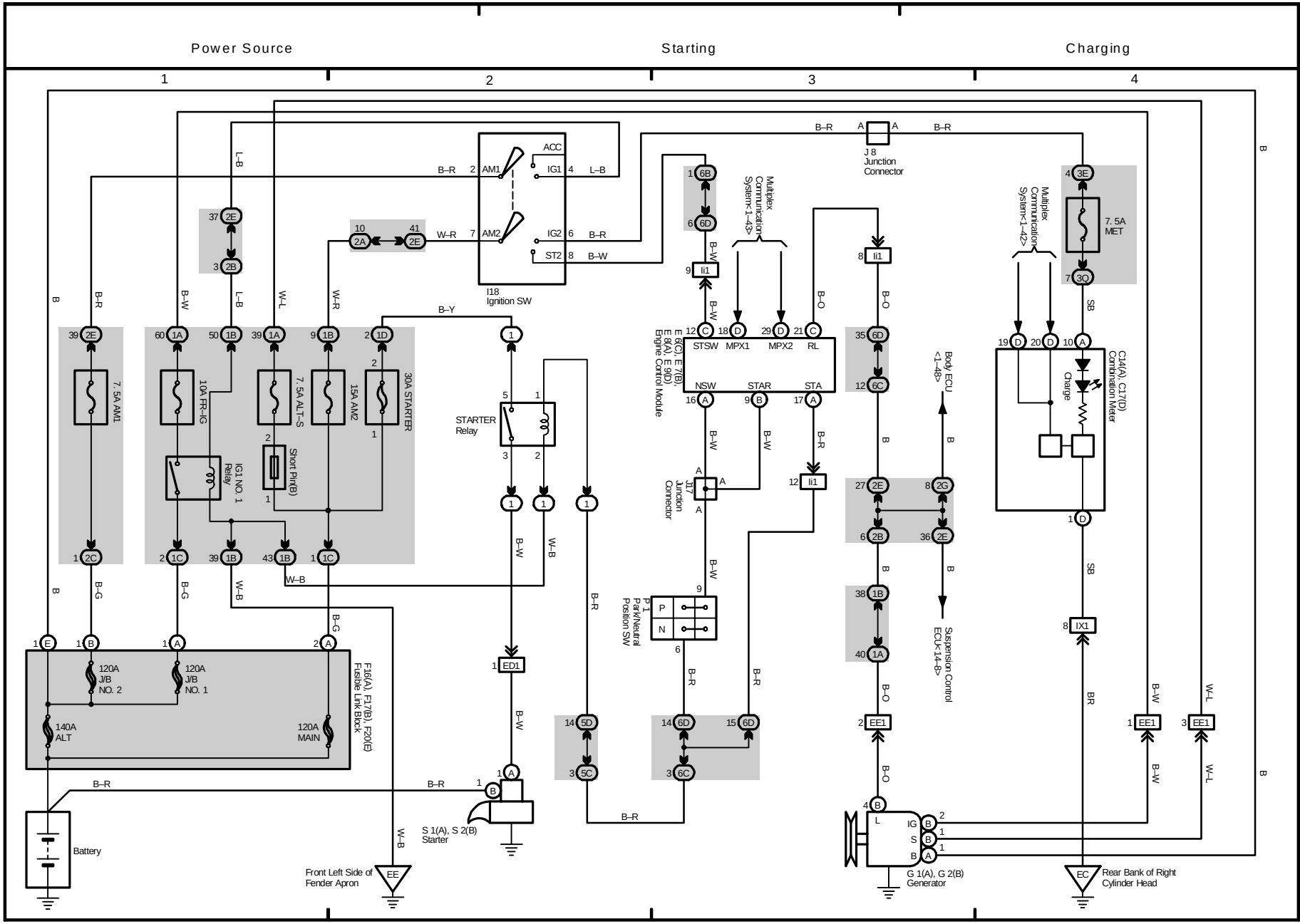
Power Source
Starting
Charging
1
2
3
4
ACC
IG1
AM1
AM2
IG2
ST2
I18
Ignition SW
J 8
Junction
Connector
7. 5A
MET
7. 5A AM1
10A FR–IG
7. 5A ALT–S
15A AM2
30A STARTER
IG1 NO. 1
Relay
Short Pin(B)
STARTER
Relay
E 6(C), E 7(B),
E 8(A), E 9(D),
Engine Control Module
STSW
MPX1
MPX2
RL
NSW
STAR
STA
J17
Junction
Connector
P1
Park/Neutral
Position SW
P
N
Multiplex
Communication
System<1–43>
Multiplex
Communication
System<1–42>
Body ECU
<1–48>
Suspension Control
ECU<14–8>
C14(A), C17(D)
Combination Meter
Charge
120A
J/B
NO. 2
120A
J/B
NO. 1
140A
ALT
120A
MAIN
F16(A), F17(B), F20(E)
Fusible Link Block
Battery
S 1(A), S 2(B)
Starter
Front Left Side of
Fender Apron
G 1(A), G 2(B)
Generator
Rear Bank of Right
Cylinder Head

3 LX 470

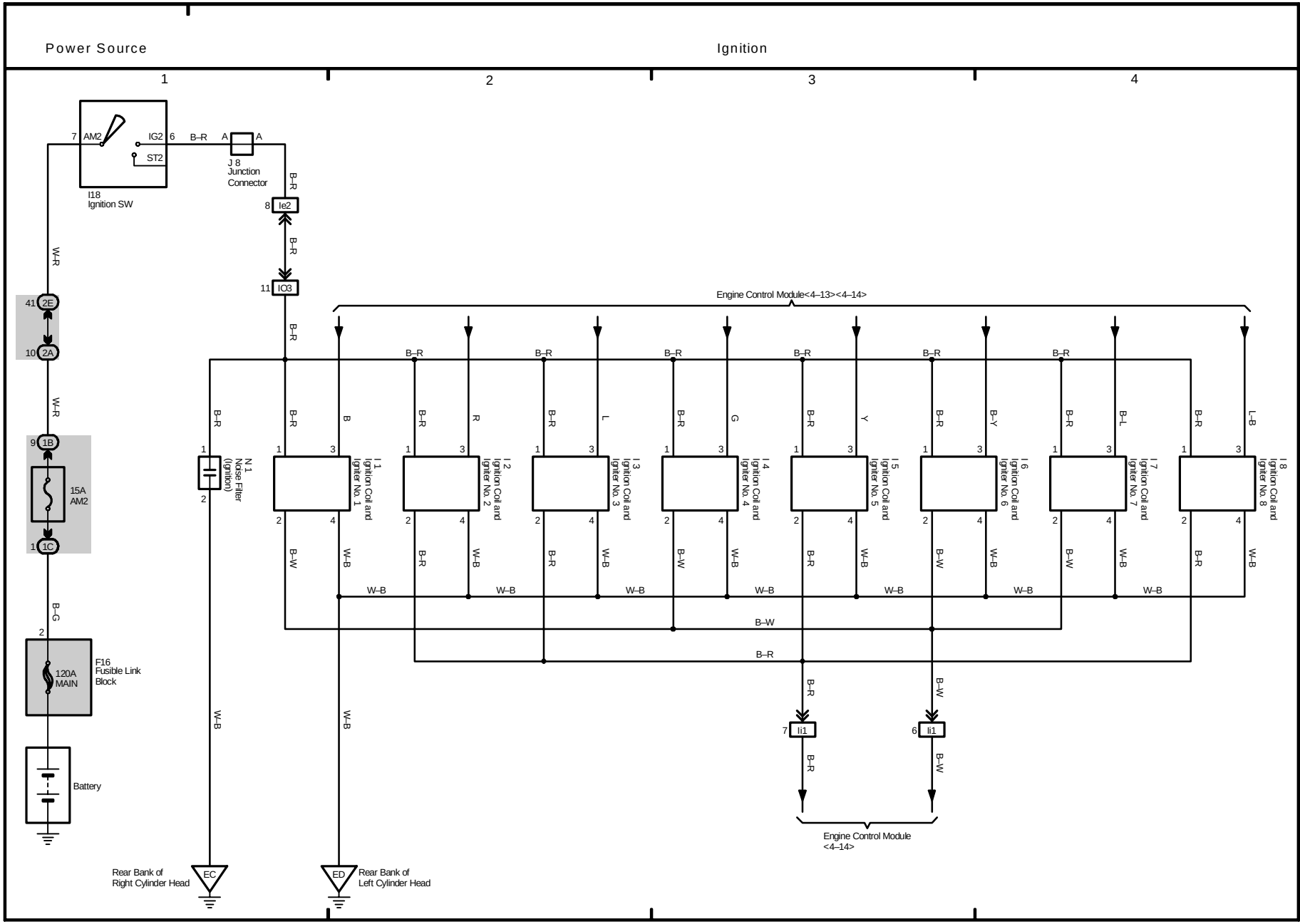
Power Source
Ignition
1
2
3
4
7 AM2
IG2 6
ST2
I18
Ignition SW
B–R
A A
J 8
Junction
Connector
8 Ie2
11 IO3
W–R
41 2E
10 2A
9 1B
15A
AM2
1 1C
B–G
2
120A
MAIN
F16
Fusible Link
Block
Battery
Engine Control Module<4–13><4–14>
N 1
Noise Filter
(Ignition)
I 1
Ignition Coil and
Igniter No. 1
I 2
Ignition Coil and
Igniter No. 2
I 3
Ignition Coil and
Igniter No. 3
I 4
Ignition Coil and
Igniter No. 4
I 5
Ignition Coil and
Igniter No. 5
I 6
Ignition Coil and
Igniter No. 6
I 7
Ignition Coil and
Igniter No. 7
I 8
Ignition Coil and
Igniter No. 8
B
R
L
G
Y
B–Y
B–L
L–B
B–W
W–B
7 Ii1
6 Ii1
Engine Control Module
<4–14>
Rear Bank of
Right Cylinder Head
EC
ED
Rear Bank of
Left Cylinder Head

(Cont. next page)

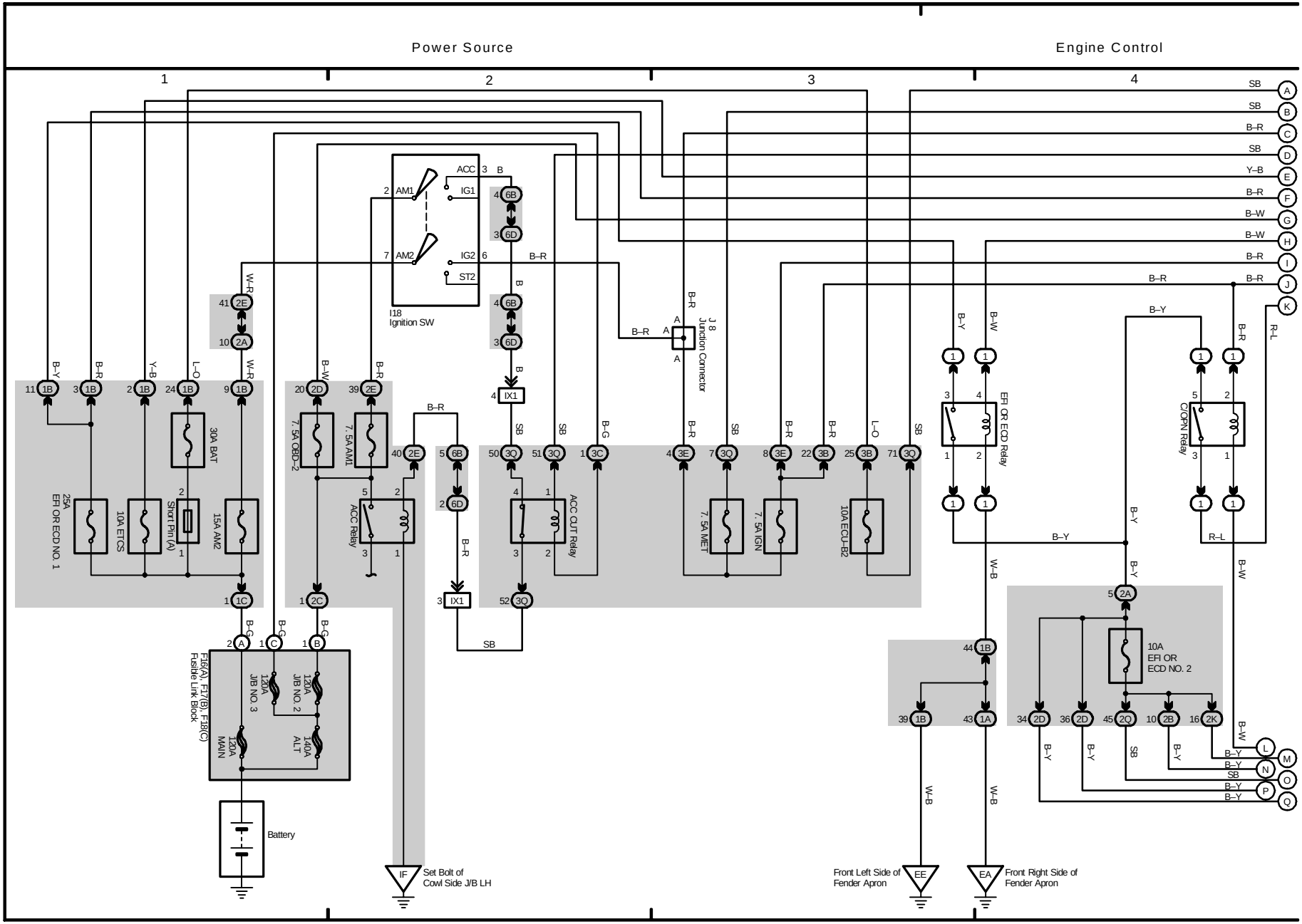

(Cont. next page)

Engine Control

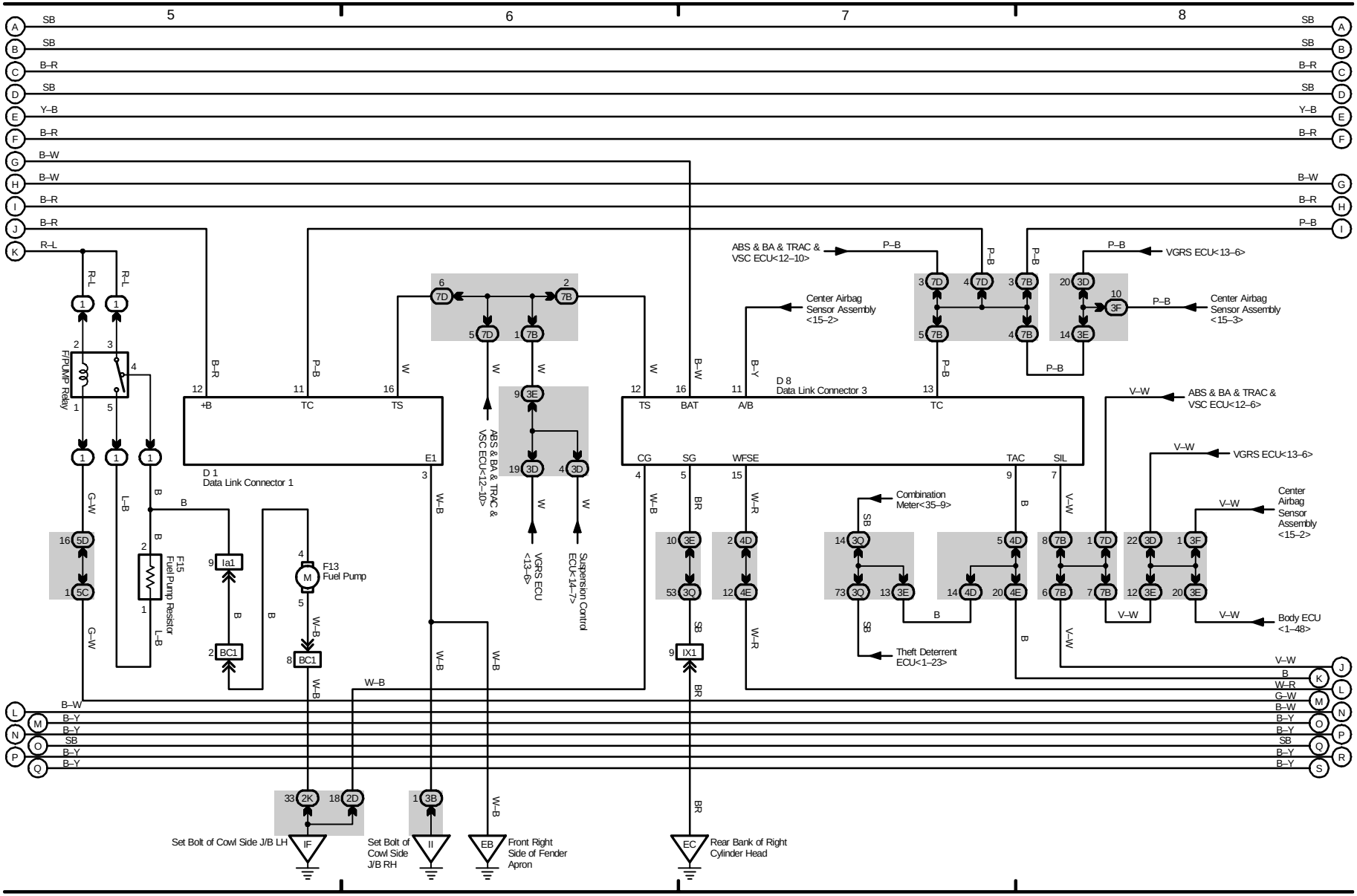

(Cont. next page)

Engine Control

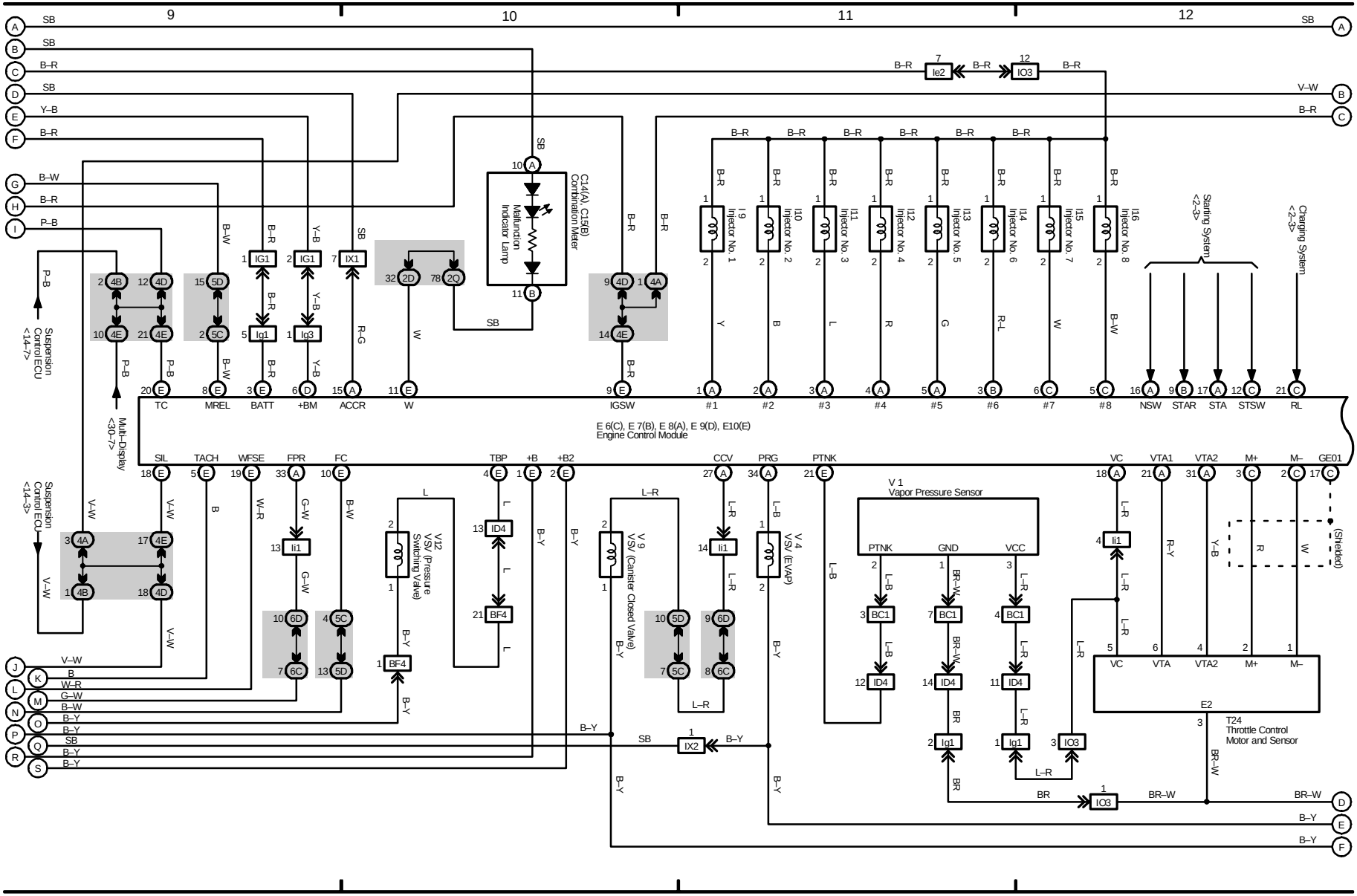

(Cont. next page)

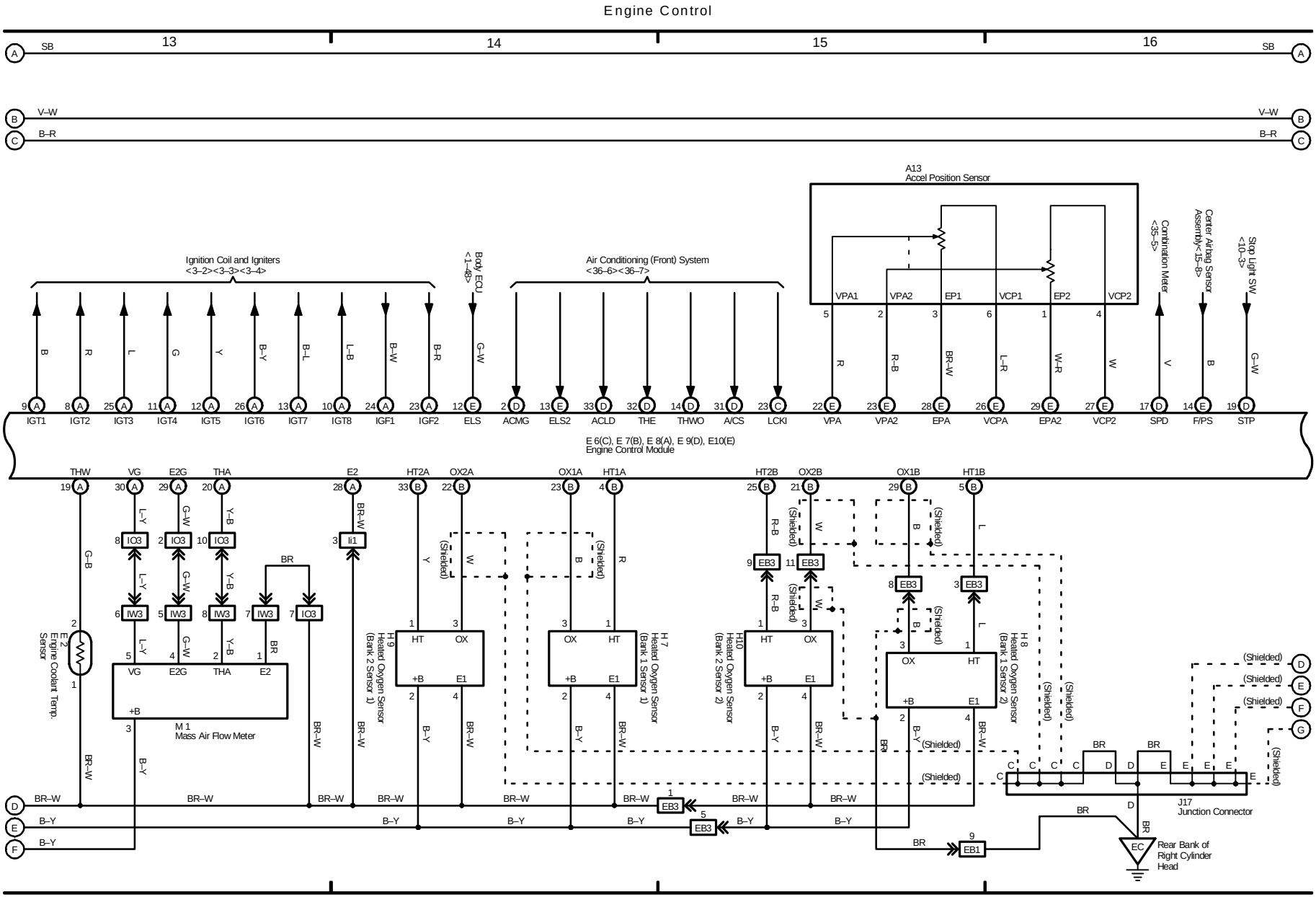

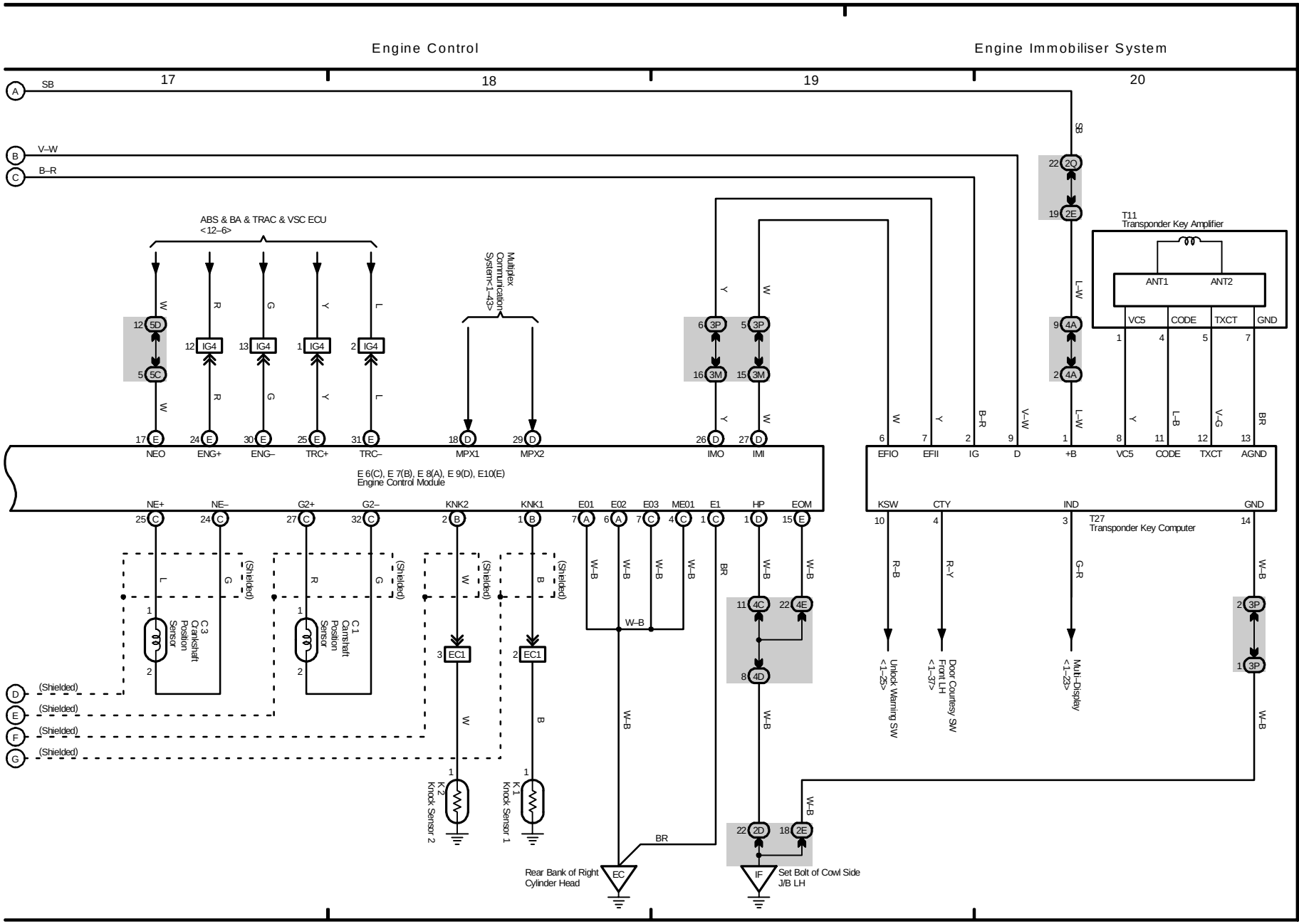
Engine Control
Engine Immobiliser System
17
18
19
20
SB
V–W
B–R
ABS & BA & TRAC & VSC ECU
<12–6>
Multiplex Communication System<1–43>
T11
Transponder Key Amplifier
ANT1
ANT2
VC5
CODE
TXCT
GND
NEO
ENG+
ENG–
TRC+
TRC–
MPX1
MPX2
IMO
IMI
EFIO
EFII
IG
D
+B
AGND
E 6(C), E 7(B), E 8(A), E 9(D), E10(E)
Engine Control Module
NE+
NE–
G2+
G2–
KNK2
KNK1
E01
E02
E03
ME01
E1
HP
EOM
KSW
CTY
IND
T27
Transponder Key Computer
(Shielded)
C 3
Crankshaft Position Sensor
C 1
Camshaft Position Sensor
K 2
Knock Sensor 2
K 1
Knock Sensor 1
Unlock Warning SW
<1–25>
Door Courtesy SW
Front LH
<1–37>
Multi–Display
<1–23>
Rear Bank of Right Cylinder Head
Set Bolt of Cowl Side J/B LH

M OVERALL ELECTRICAL WIRING DIAGRAM

(Cont. next page)

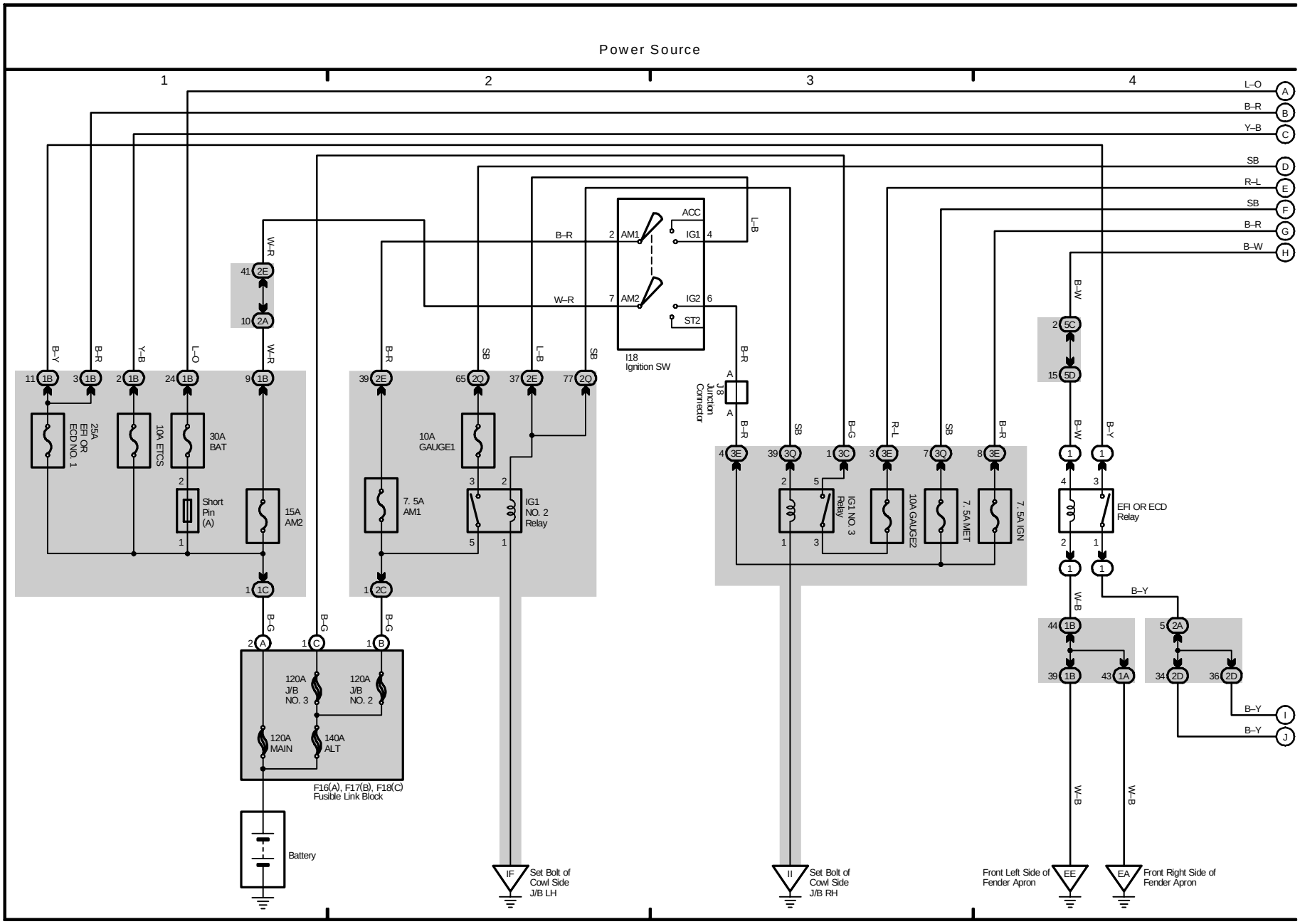

(Cont. next page)

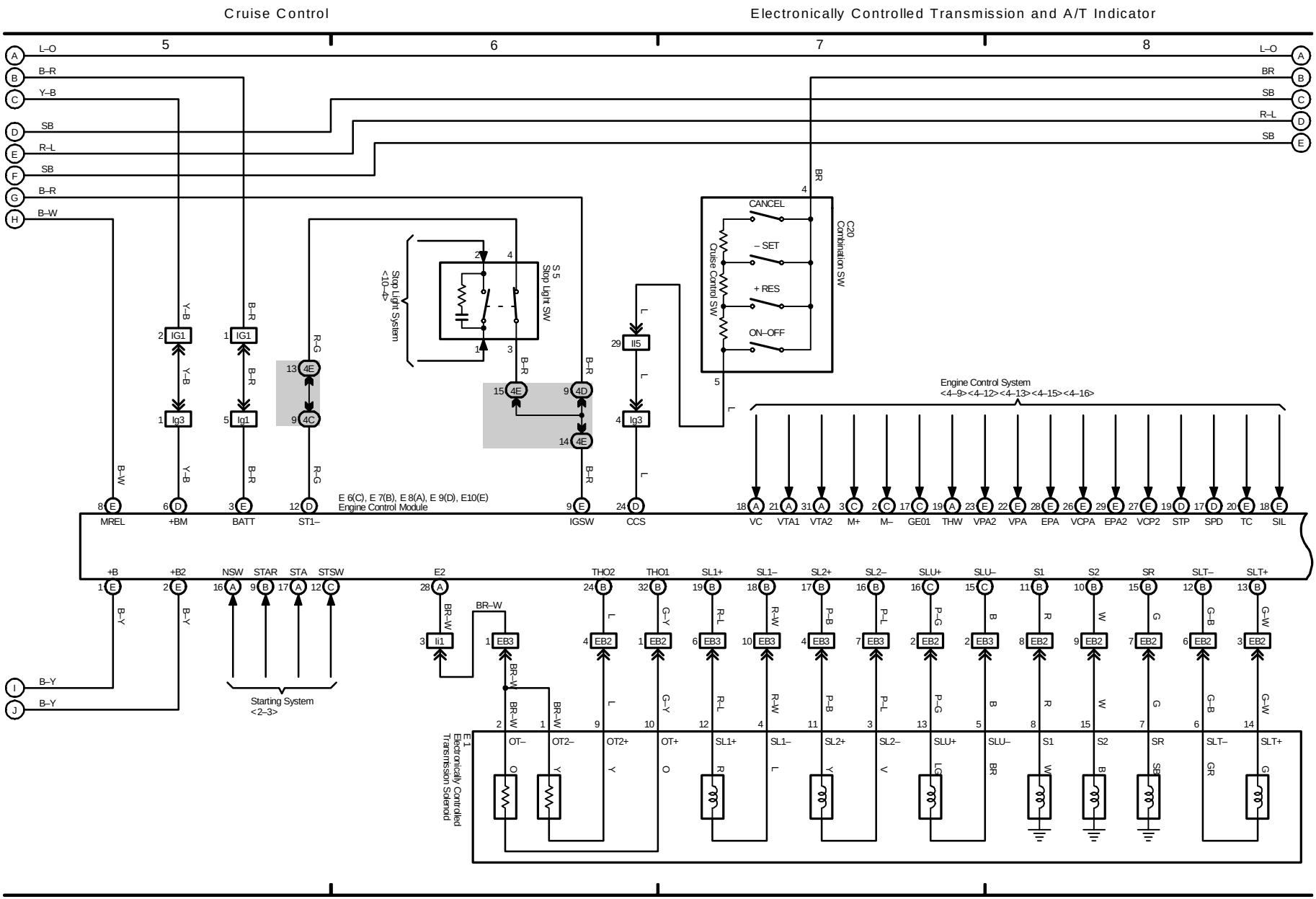

M OVERALL ELECTRICAL WIRING DIAGRAM

Electronically Controlled Transmission and A/T Indicator

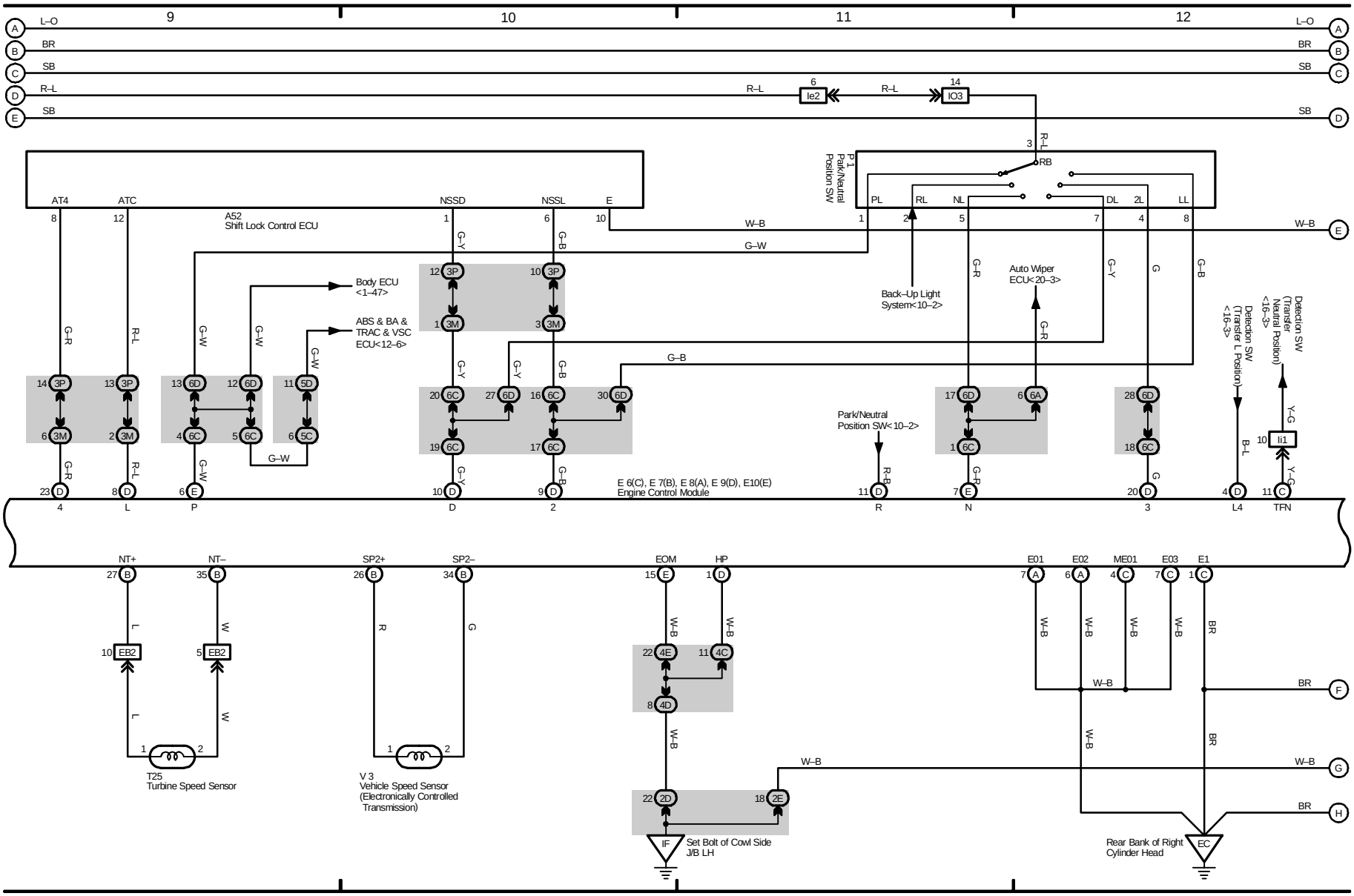

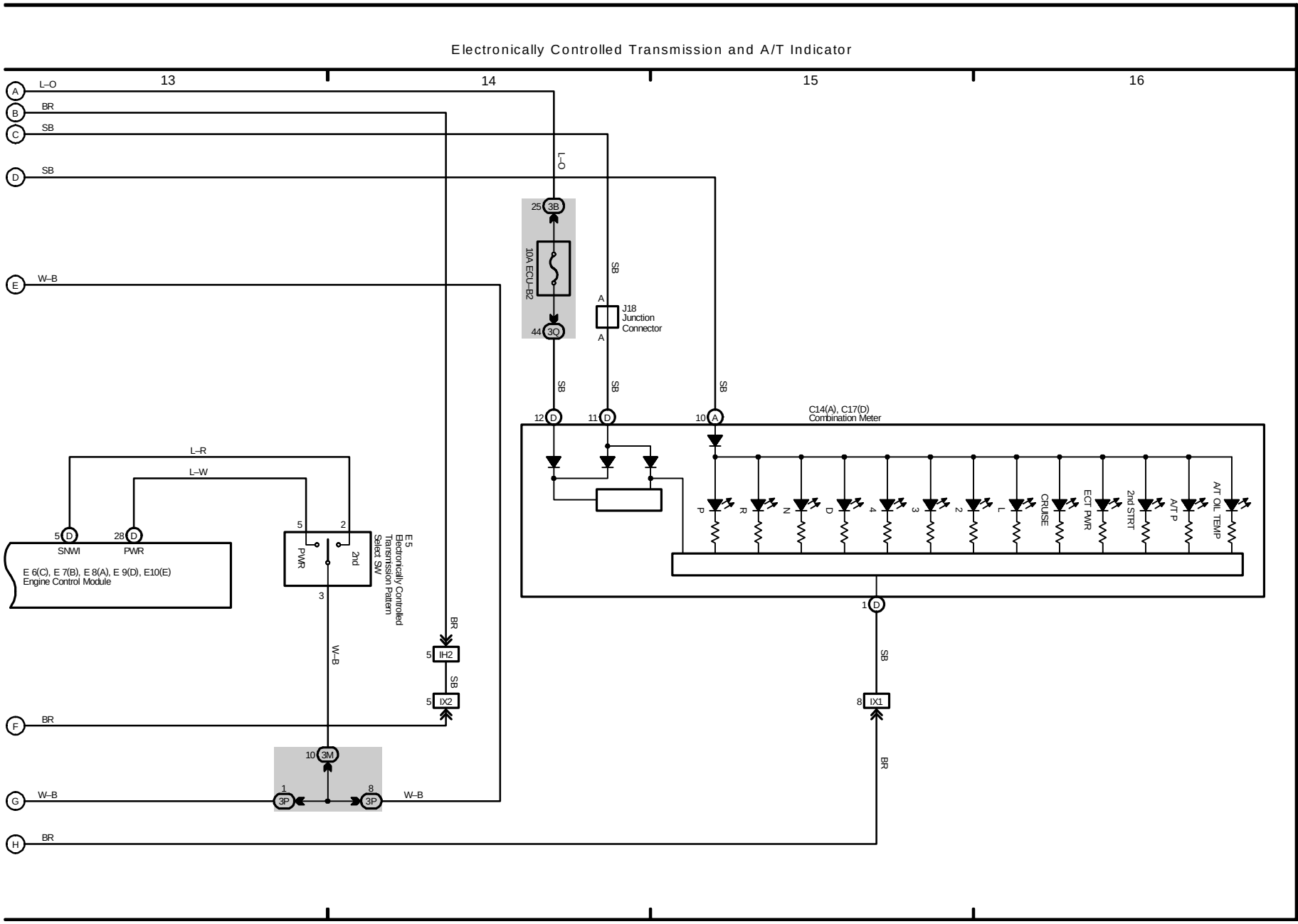
Electronically Controlled Transmission and A/T Indicator
13
14
15
16
A
L–O
B
BR
C
SB
D
SB
E
W–B
F
BR
G
W–B
H
BR
L–O
25 3B
10A ECU–B2
44 3Q
SB
A
J18
Junction
Connector
A
SB
SB
SB
12 D
11 D
10 A
C14(A), C17(D)
Combination Meter
P
R
N
D
4
3
2
L
CRUISE
ECT PWR
2nd STRT
A/T P
A/T OIL TEMP
1 D
SB
8 IX1
BR
L–R
L–W
5 D
SNWI
28 D
PWR
E 6(C), E 7(B), E 8(A), E 9(D), E10(E)
Engine Control Module
5
2
PVR
2nd
3
E 5
Electronically Controlled
Transmission Pattern
Select SW
W–B
BR
5 IH2
SB
5 IX2
10 3M
1
3P
8
3P
W–B

M OVERALL ELECTRICAL WIRING DIAGRAM

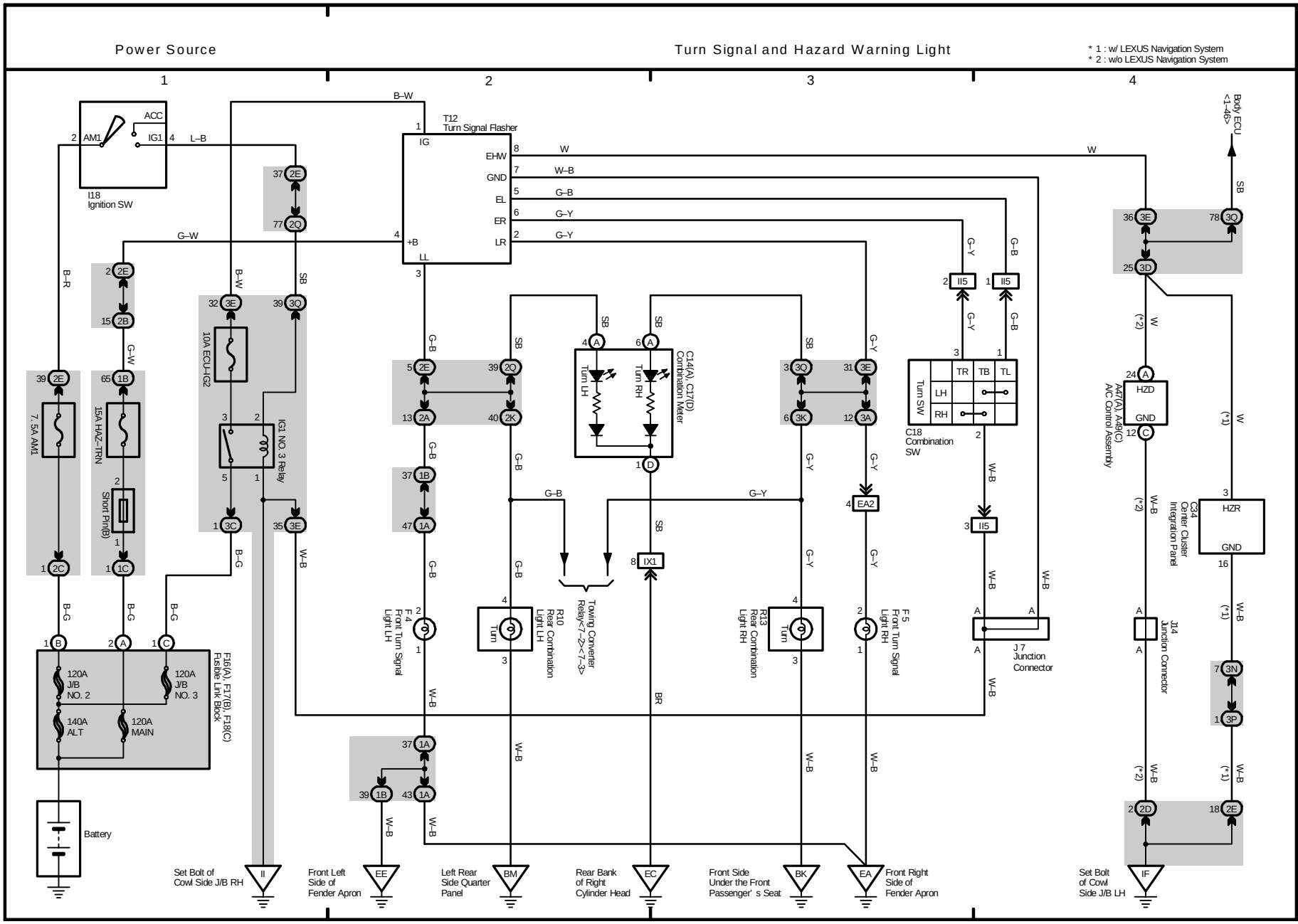
Power Source
Turn Signal and Hazard Warning Light
* 1 : w/ LEXUS Navigation System
* 2 : w/o LEXUS Navigation System
1
2
3
4
I18
Ignition SW
ACC
AM1
IG1
T12
Turn Signal Flasher
IG
EHW
GND
EL
ER
LR
+B
LL
7. 5A AM1
15A HAZ–TRN
Short Pin(B)
10A ECU–IG2
IG1 NO. 3 Relay
F16(A), F17(B), F18(C)
Fusible Link Block
120A
J/B
NO. 2
120A
J/B
NO. 3
140A
ALT
120A
MAIN
Battery
C14(A), C17(D)
Combination Meter
Turn LH
Turn RH
Turn SW
LH
RH
TR
TB
TL
C18
Combination
SW
Towing Converter
Relay<7–2><7–3>
F 4
Front Turn Signal
Light LH
R10
Rear Combination
Light LH
R13
Rear Combination
Light RH
F 5
Front Turn Signal
Light RH
J 7
Junction
Connector
Body ECU
<1–46>
A47(A), A49(C)
A/C Control Assembly
HZD
GND
C34
Center Cluster
Integration Panel
HZR
J14
Junction Connector
Set Bolt of
Cowl Side J/B RH
Front Left
Side of
Fender Apron
Left Rear
Side Quarter
Panel
Rear Bank
of Right
Cylinder Head
Front Side
Under the Front
Passenger' s Seat
Front Right
Side of
Fender Apron
Set Bolt
of Cowl
Side J/B LH

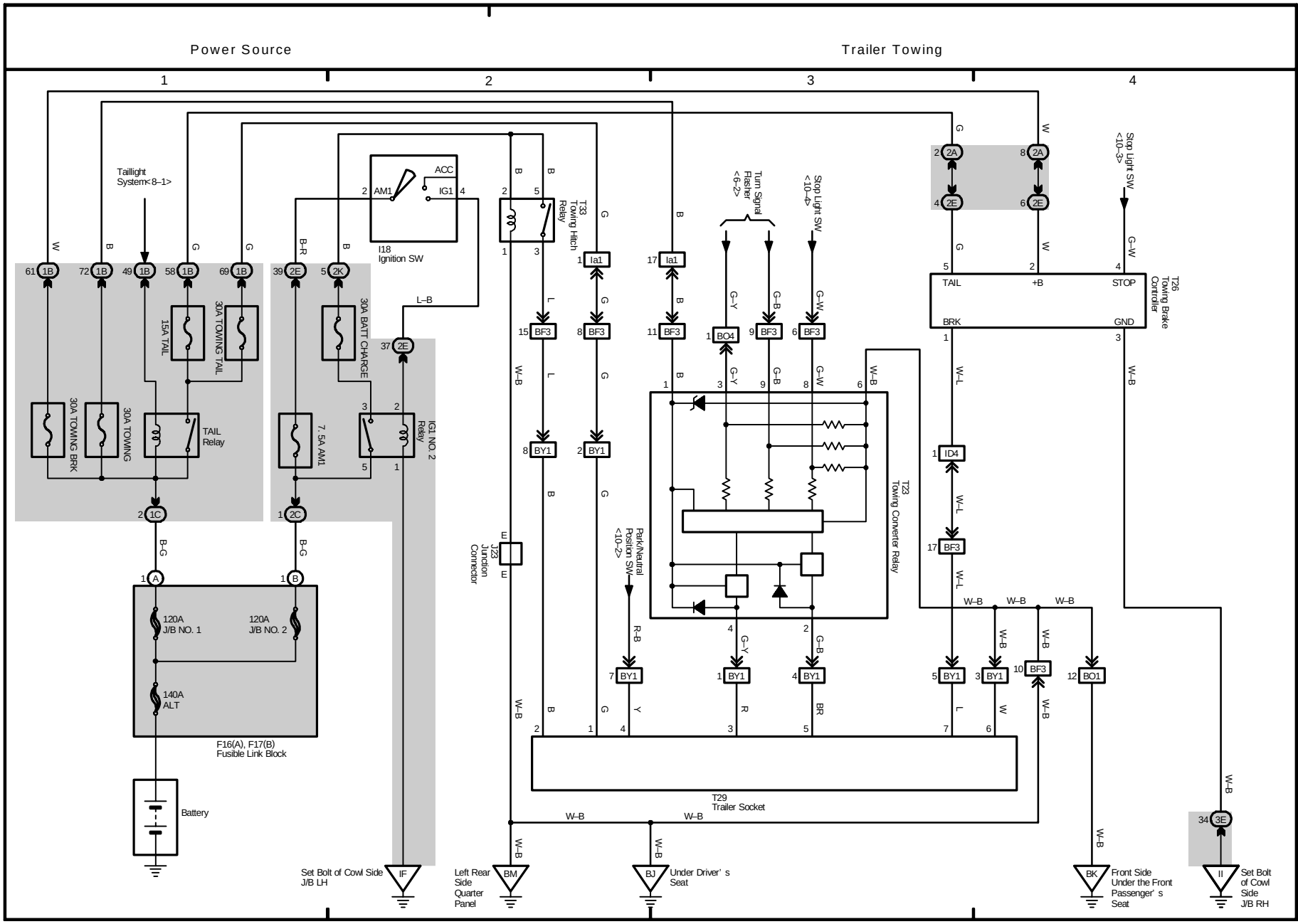
Power Source
Trailer Towing
1
2
3
4
Taillight System<8–1>
I18 Ignition SW
ACC
AM1
IG1
T33 Towing Hitch Relay
Turn Signal Flasher <6–2>
Stop Light SW <10–4>
Stop Light SW <10–3>
T26 Towing Brake Controller
TAIL
+B
STOP
BRK
GND
15A TAIL
30A TOWING TAIL
30A BATT CHARGE
30A TOWING BRK
30A TOWING
TAIL Relay
7.5A AM1
IG1 NO. 2 Relay
J23 Junction Connector
Park/Neutral Position SW <10–2>
T23 Towing Converter Relay
120A J/B NO. 1
120A J/B NO. 2
140A ALT
F16(A), F17(B) Fusible Link Block
Battery
T29 Trailer Socket
Set Bolt of Cowl Side J/B LH
Left Rear Side Quarter Panel
Under Driver's Seat
Front Side Under the Front Passenger's Seat
Set Bolt of Cowl Side J/B RH

M OVERALL ELECTRICAL WIRING DIAGRAM

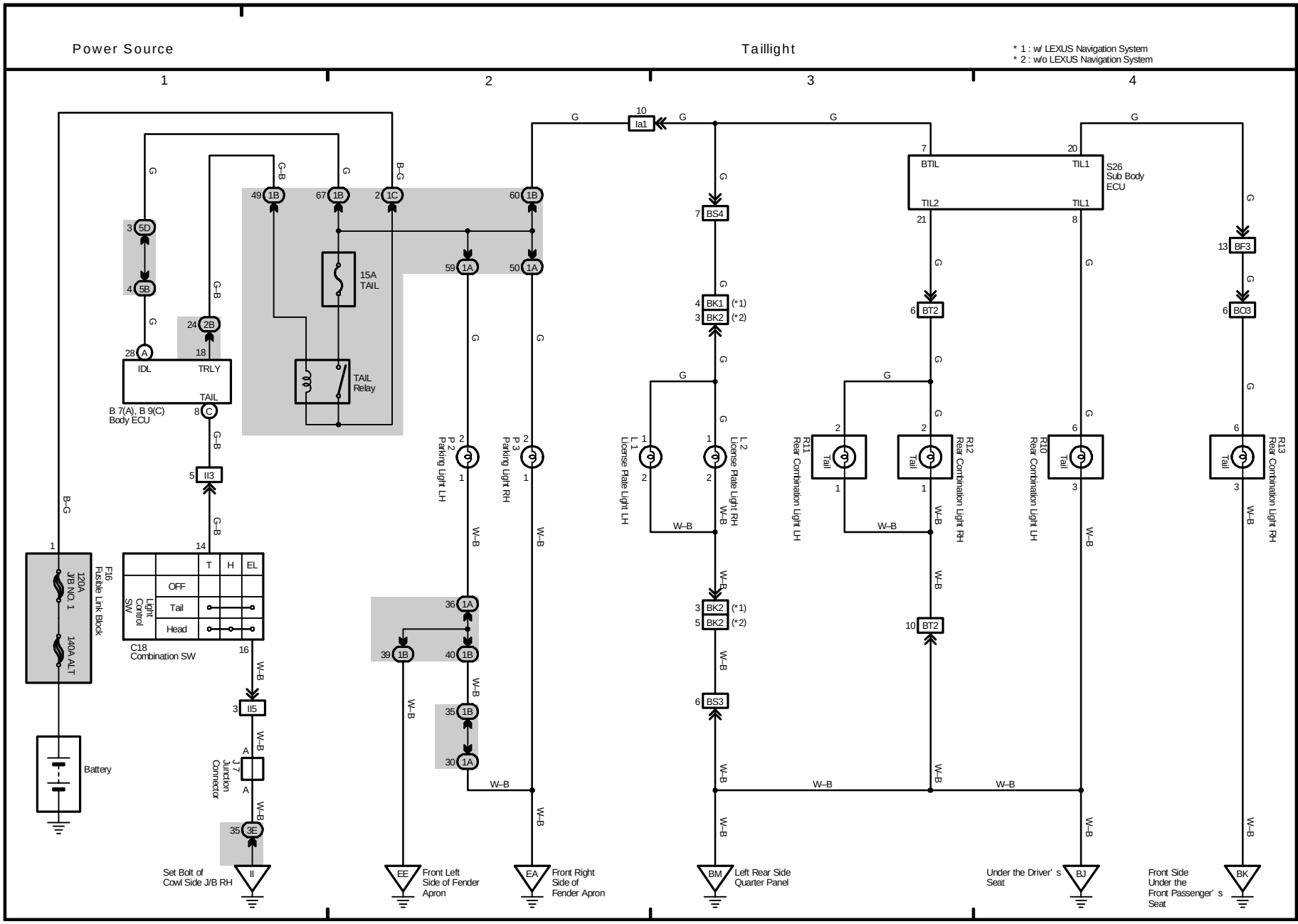
Power Source
Taillight
* 1 : w/ LEXUS Navigation System
* 2 : w/o LEXUS Navigation System
1
2
3
4
F16 Fusible Link Block
120A J/B NO. 1
140A ALT
Battery
B 7(A), B 9(C) Body ECU
IDL
TRLY
TAIL
15A TAIL
TAIL Relay
C18 Combination SW
Light Control SW
OFF
Tail
Head
T
H
EL
J7 Junction Connector
Set Bolt of Cowl Side J/B RH
P 2 Parking Light LH
P 3 Parking Light RH
Front Left Side of Fender Apron
Front Right Side of Fender Apron
L 1 License Plate Light LH
L 2 License Plate Light RH
R11 Rear Combination Light LH
R12 Rear Combination Light RH
R10 Rear Combination Light LH
R13 Rear Combination Light RH
S26 Sub Body ECU
BTIL
TIL1
TIL2
Left Rear Side Quarter Panel
Under the Driver' s Seat
Front Side Under the Front Passenger' s Seat

M OVERALL ELECTRICAL WIRING DIAGRAM

(Cont. next page)

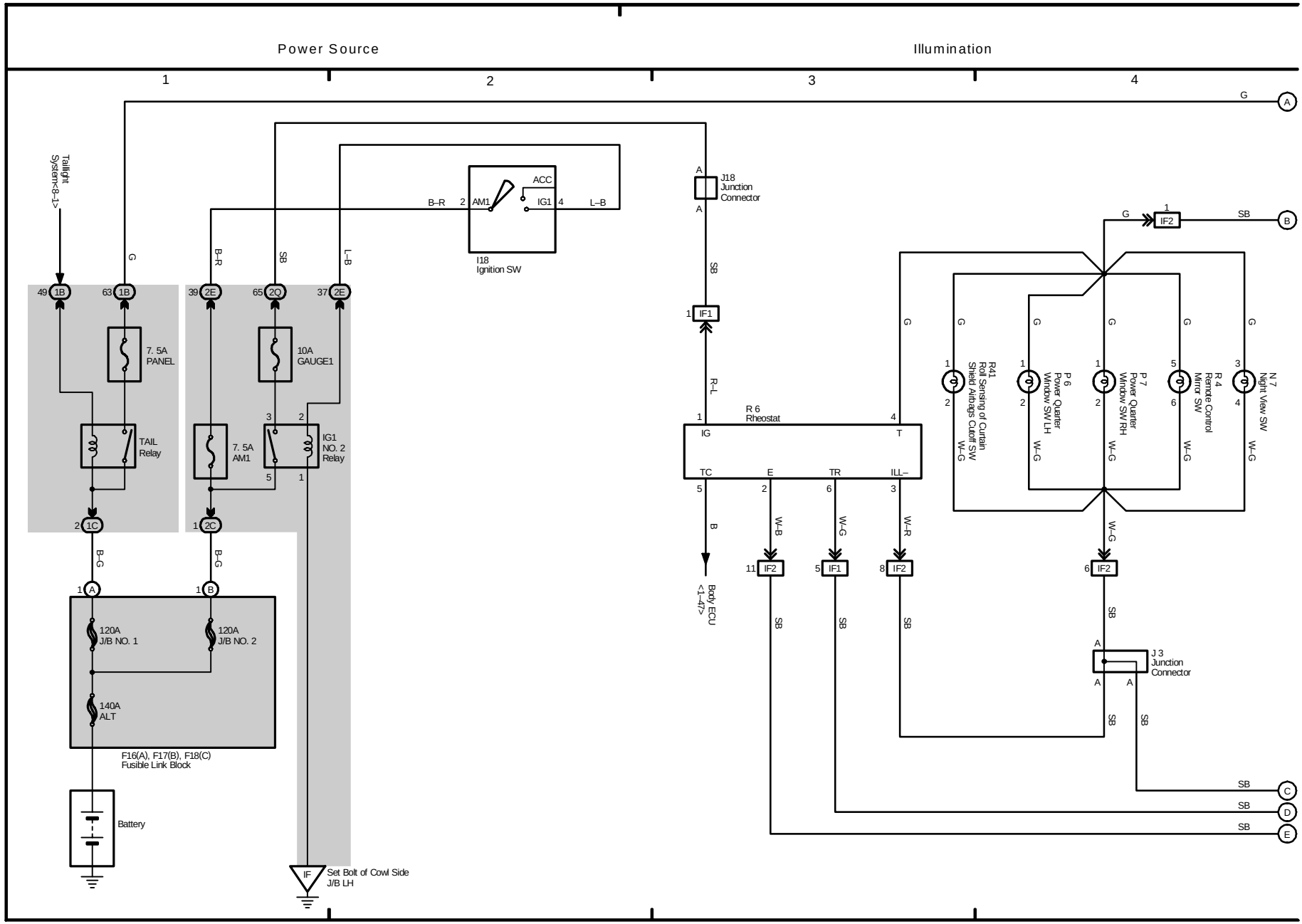

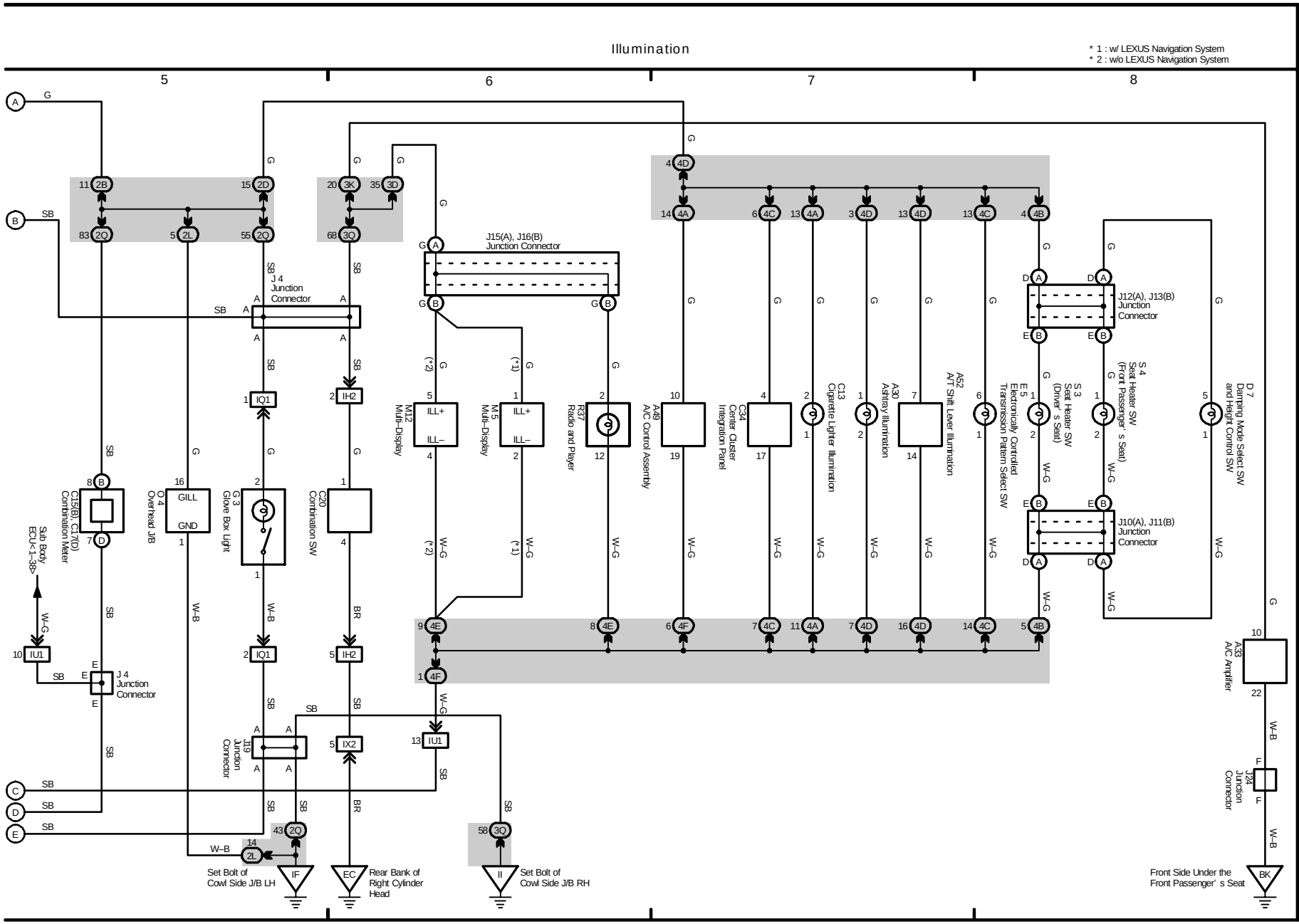
Illumination
* 1 : w/ LEXUS Navigation System
* 2 : w/o LEXUS Navigation System
5
6
7
8
J15(A), J16(B) Junction Connector
J 4 Junction Connector
J12(A), J13(B) Junction Connector
J10(A), J11(B) Junction Connector
M12 Multi-Display
M 5 Multi-Display
R37 Radio and Player
A49 A/C Control Assembly
C34 Center Cluster Integration Panel
C13 Cigarette Lighter Illumination
A30 Ashtray Illumination
A52 A/T Shift Lever Illumination
E 5 Electronically Controlled Transmission Pattern Select SW
S 3 Seat Heater SW (Driver' s Seat)
S 4 Seat Heater SW (Front Passenger' s Seat)
D 7 Damping Mode Select SW and Height Control SW
A33 A/C Amplifier
J24 Junction Connector
C15(B), C17(D) Combination Meter
O 4 Overhead J/B
G 3 Glove Box Light
C20 Combination SW
J19 Junction Connector
Sub Body ECU<1-38>
Set Bolt of Cowl Side J/B LH
Rear Bank of Right Cylinder Head
Set Bolt of Cowl Side J/B RH
Front Side Under the Front Passenger' s Seat

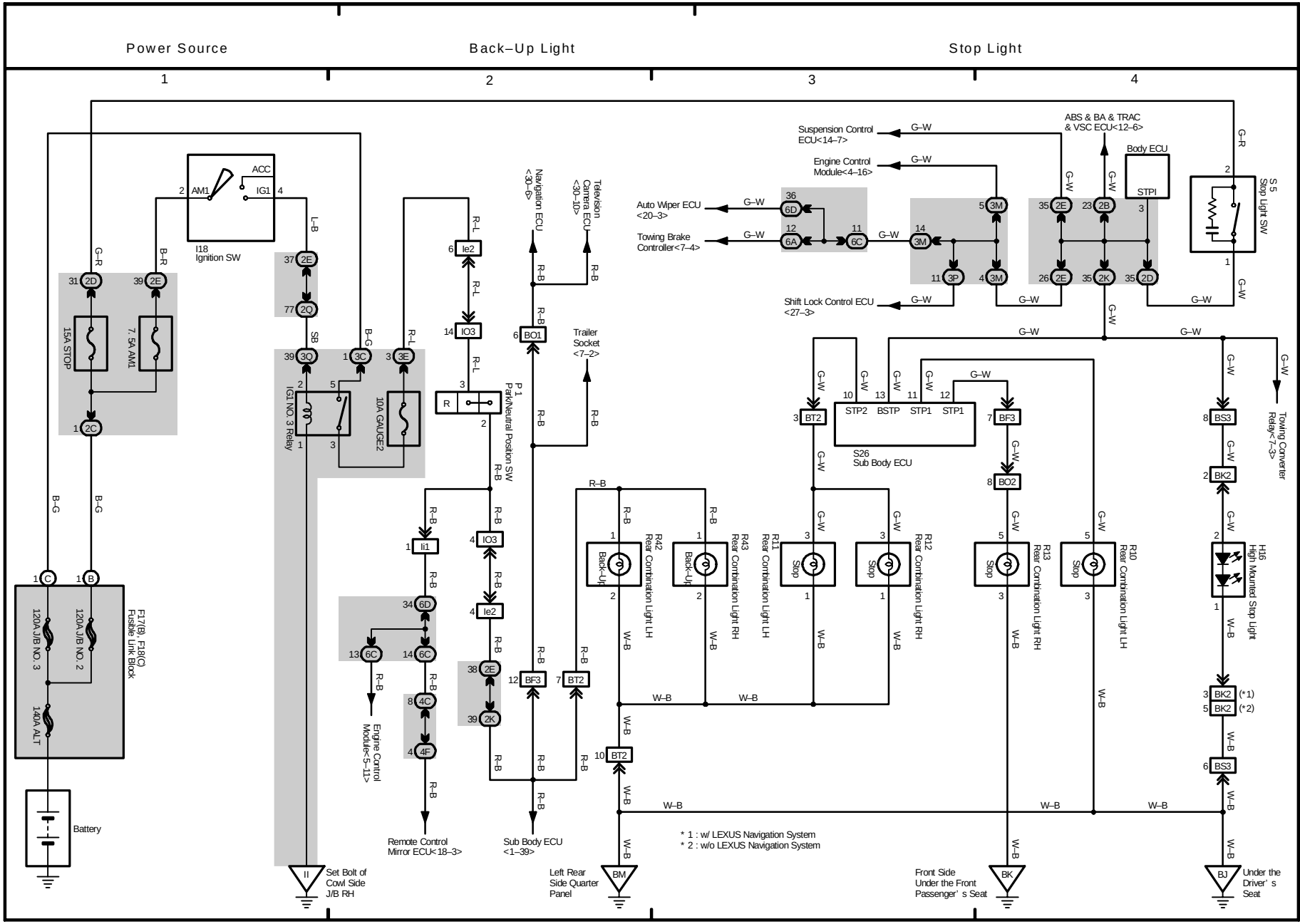
Power Source
Back–Up Light
Stop Light
1
2
3
4
ACC
AM1
IG1
I18
Ignition SW
15A STOP
7. 5A AM1
IG1 NO. 3 Relay
10A GAUGE2
F17(B), F18(C)
Fusible Link Block
120A J/B NO. 3
120A J/B NO. 2
140A ALT
Battery
Navigation ECU
<30–6>
Television
Camera ECU
<30–10>
P 1
Park/Neutral Position SW
Trailer
Socket
<7–2>
Engine Control
Module<5–11>
Remote Control
Mirror ECU<18–3>
Sub Body ECU
<1–39>
Set Bolt of
Cowl Side
J/B RH
Left Rear
Side Quarter
Panel
Front Side
Under the Front
Passenger' s Seat
Under the
Driver' s
Seat
Suspension Control
ECU<14–7>
Engine Control
Module<4–16>
Auto Wiper ECU
<20–3>
Towing Brake
Controller<7–4>
Shift Lock Control ECU
<27–3>
ABS & BA & TRAC
& VSC ECU<12–6>
Body ECU
STPI
S 5
Stop Light SW
S26
Sub Body ECU
STP2
BSTP
STP1
STP1
Towing Converter
Relay<7–3>
R42
Rear Combination Light LH
R43
Rear Combination Light RH
R11
Rear Combination Light LH
R12
Rear Combination Light RH
R13
Rear Combination Light RH
R10
Rear Combination Light LH
H16
High Mounted Stop Light
Back–Up
Stop
* 1 : w/ LEXUS Navigation System
* 2 : w/o LEXUS Navigation System

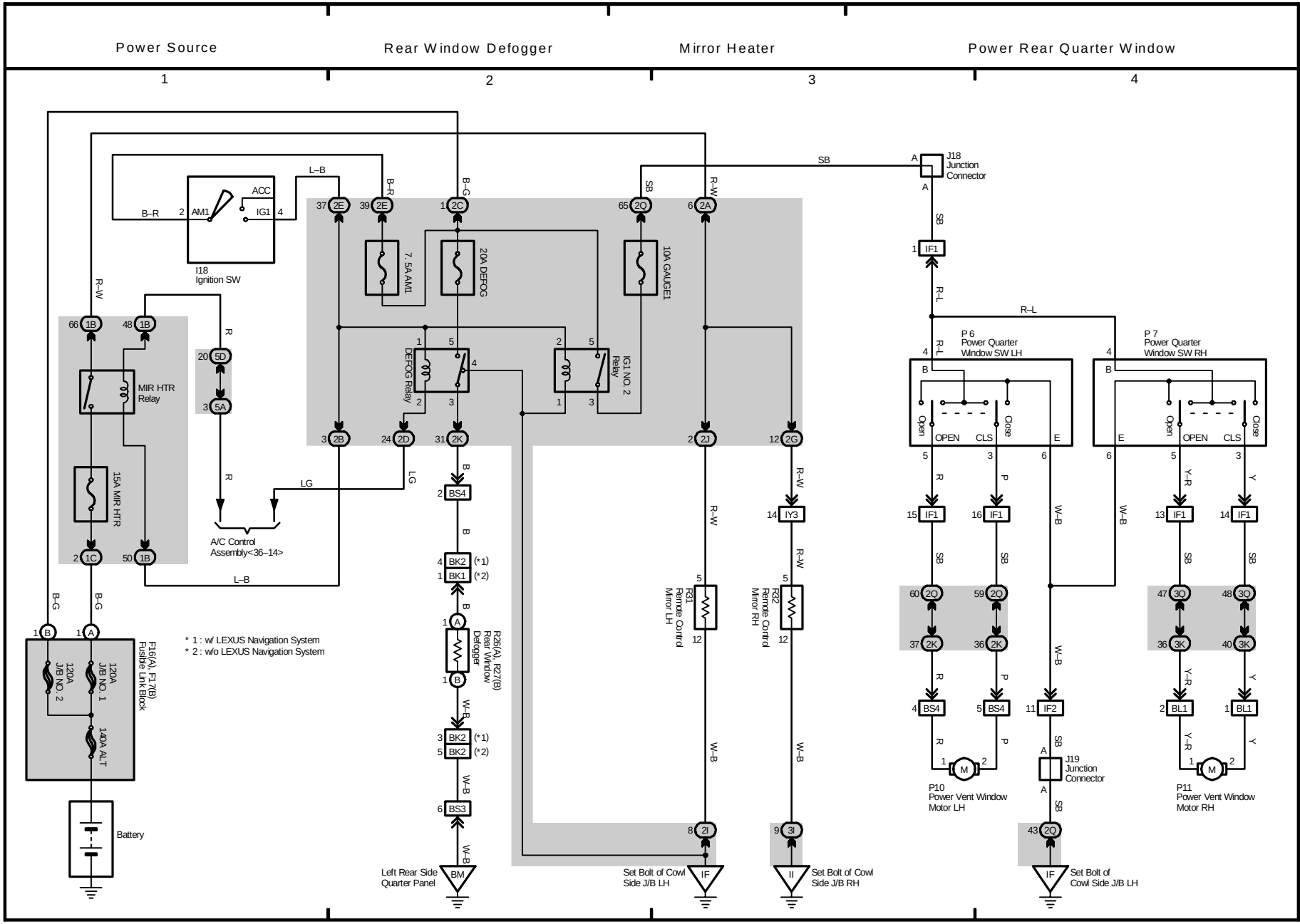
Power Source
Rear Window Defogger
Mirror Heater
Power Rear Quarter Window
1
2
3
4
I18
Ignition SW
AM1
ACC
IG1
7. 5A AM1
20A DEFOG
10A GAUGE1
DEFOG Relay
IG1 NO. 2 Relay
MIR HTR Relay
15A MIR HTR
A/C Control Assembly<36–14>
F16(A), F17(B) Fusible Link Block
120A J/B NO. 2
120A J/B NO. 1
140A ALT
Battery
* 1 : w/ LEXUS Navigation System
* 2 : w/o LEXUS Navigation System
R26(A), R27(B) Rear Window Defogger
Left Rear Side Quarter Panel
R31 Remote Control Mirror LH
R32 Remote Control Mirror RH
Set Bolt of Cowl Side J/B LH
Set Bolt of Cowl Side J/B RH
J18 Junction Connector
P 6 Power Quarter Window SW LH
P 7 Power Quarter Window SW RH
P10 Power Vent Window Motor LH
P11 Power Vent Window Motor RH
J19 Junction Connector
Set Bolt of Cowl Side J/B LH

(Cont. next page)

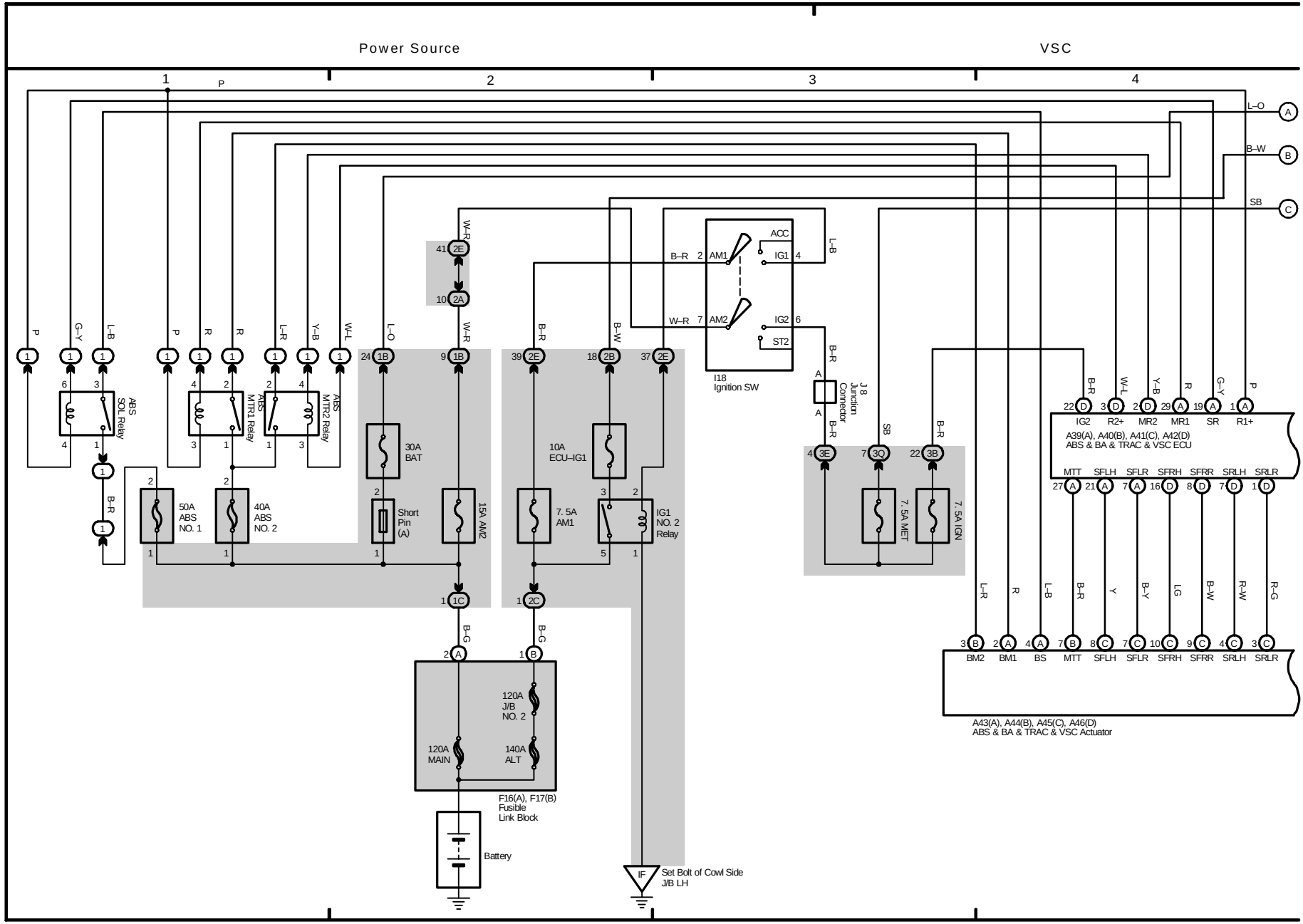

(Cont. next page)

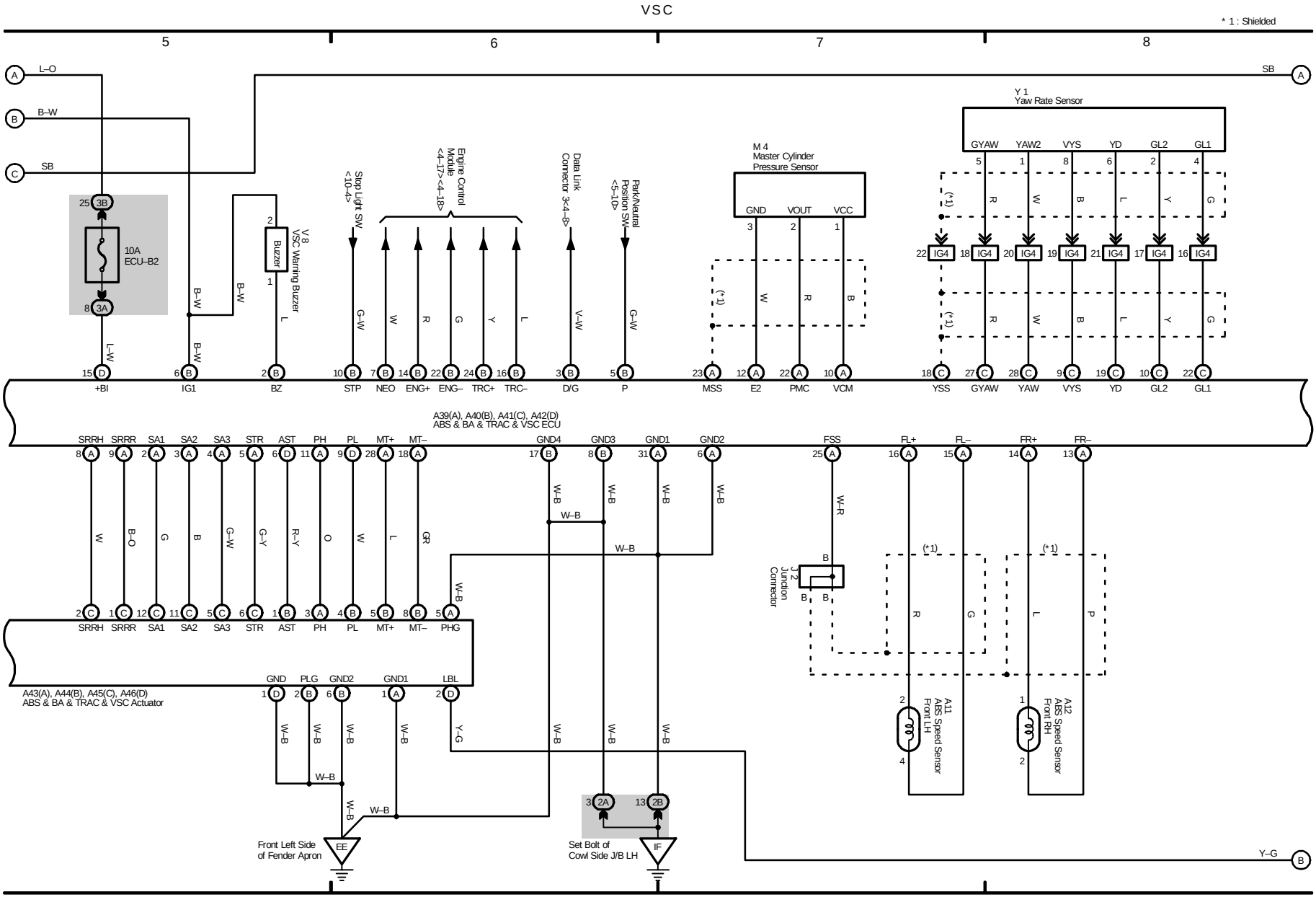

(Cont. next page)

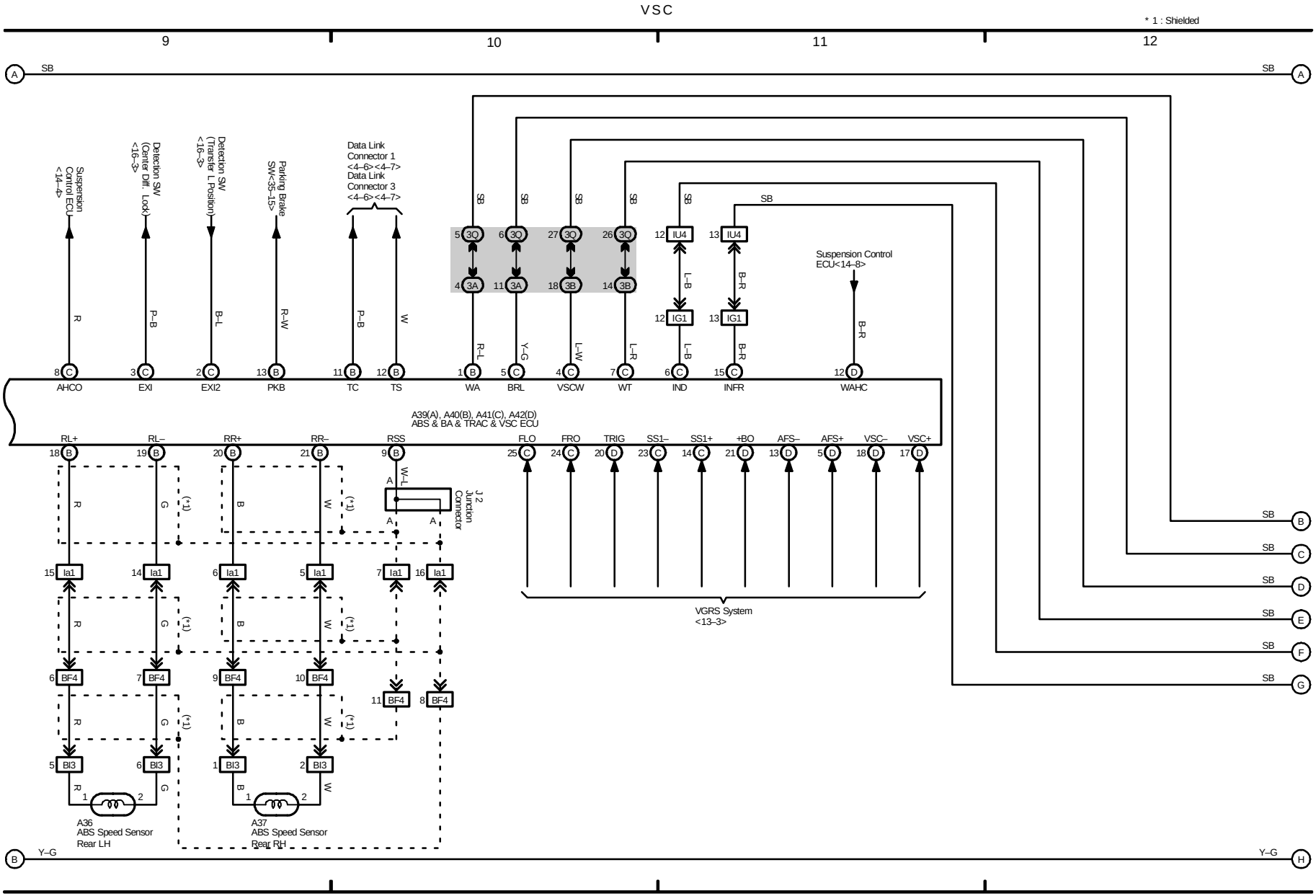

12 LX 470 (Cont' d)

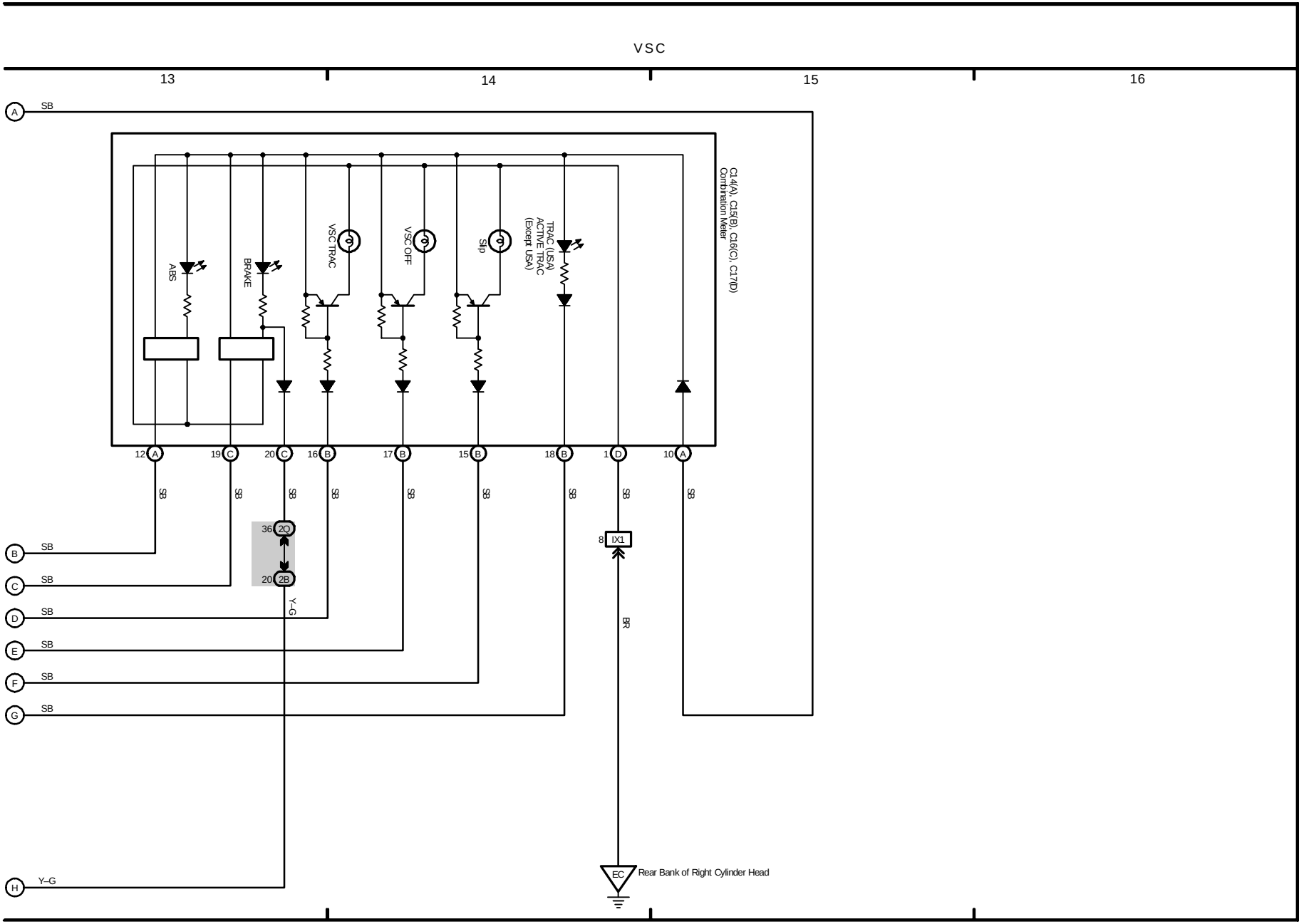

(Cont. next page)

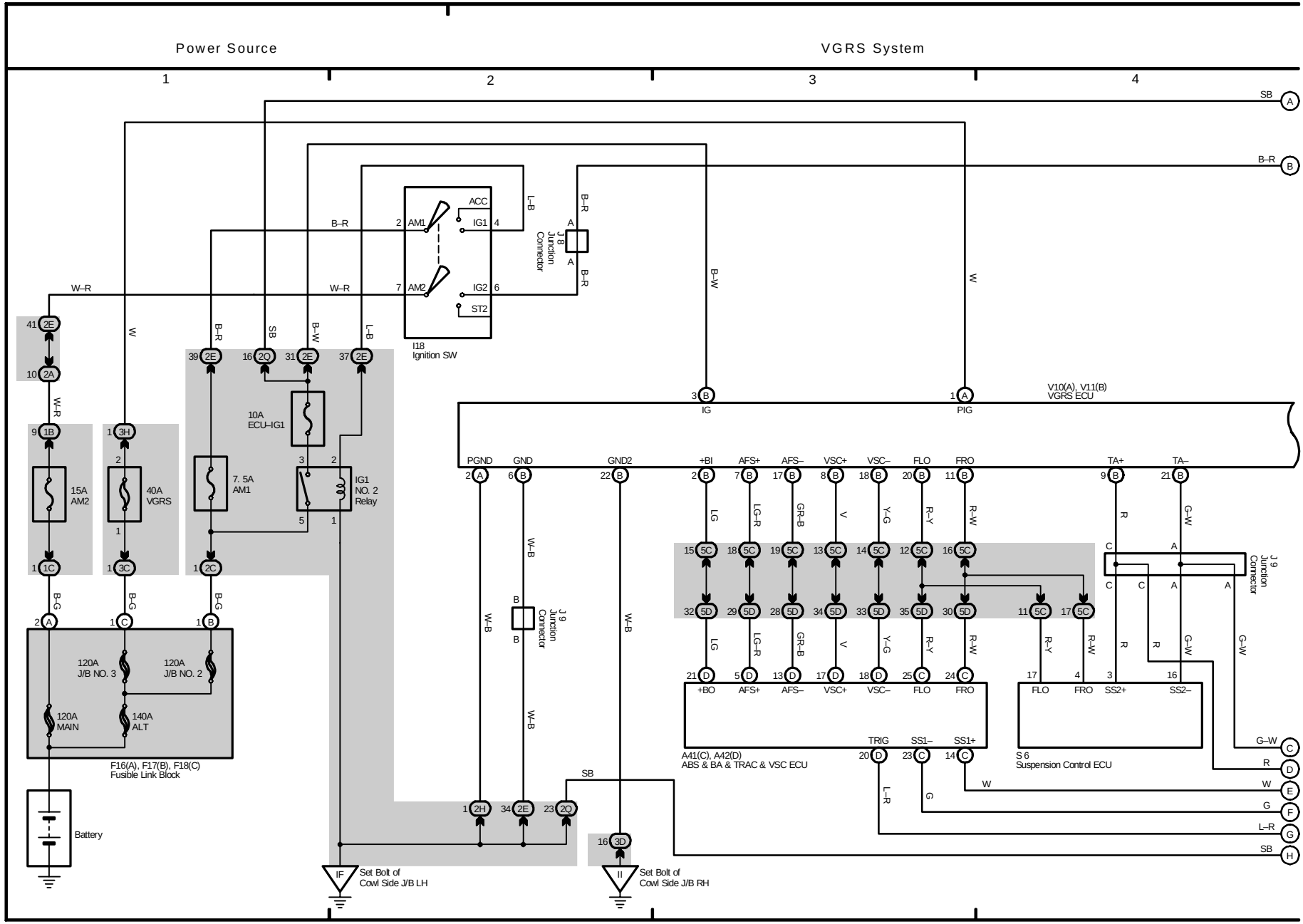

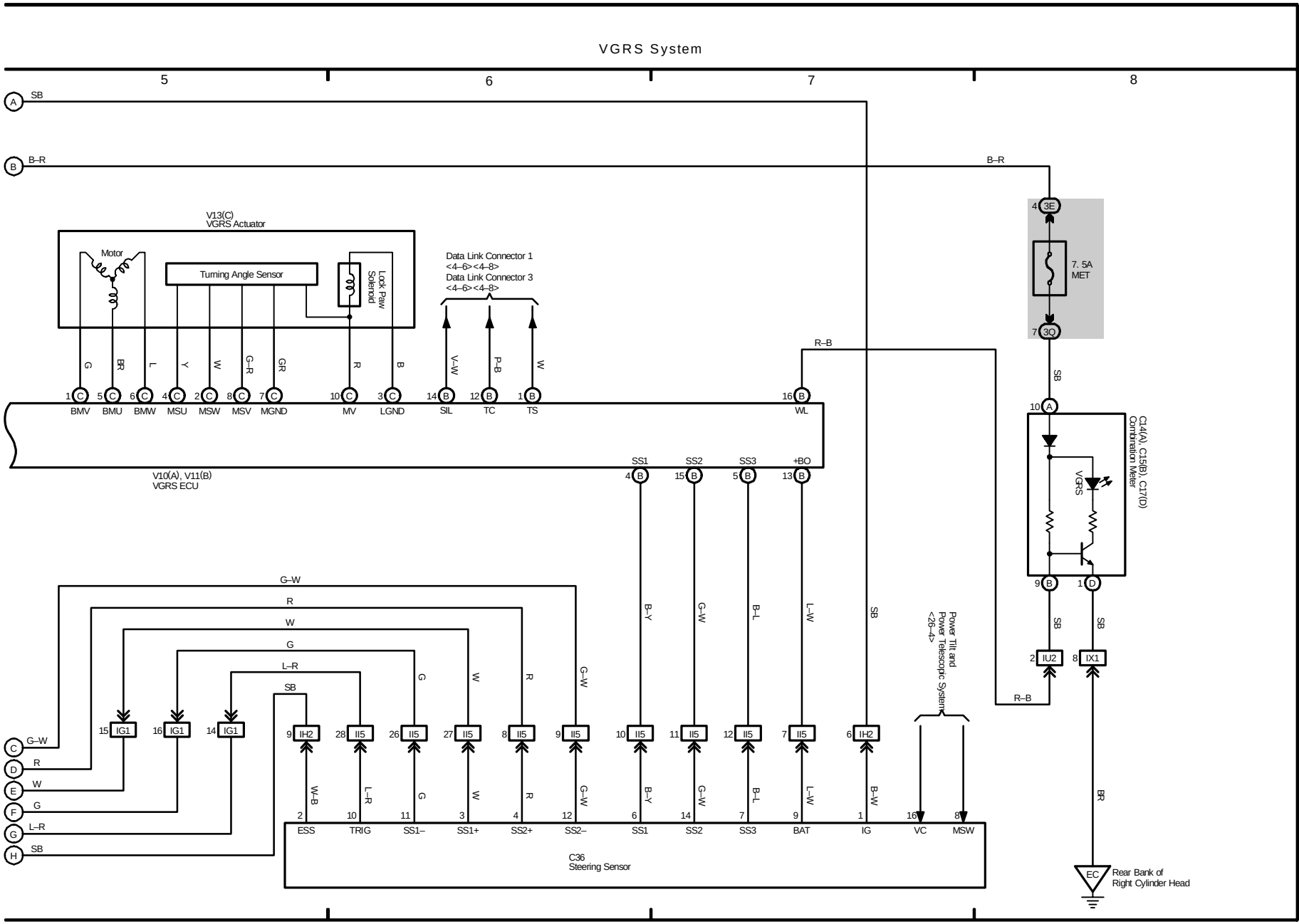
VGRS System
5
6
7
8
SB
B–R
V13(C)
VGRS Actuator
Motor
Turning Angle Sensor
Lock Paw Solenoid
Data Link Connector 1
<4–6><4–8>
Data Link Connector 3
<4–6><4–8>
G
BR
L
Y
W
G–R
GR
R
B
V–W
P–B
W
BMV
BMU
BMW
MSU
MSW
MSV
MGND
MV
LGND
SIL
TC
TS
R–B
WL
V10(A), V11(B)
VGRS ECU
SS1
SS2
SS3
+BO
7. 5A
MET
3E
3Q
CL4(A), C15(B), C17(D)
Combination Meter
VGRS
IU2
IX1
BR
EC
Rear Bank of
Right Cylinder Head
G–W
R
W
G
L–R
SB
IG1
IH2
II5
B–Y
B–L
L–W
B–W
Power Tilt and
Power Telescopic System
<26–4>
ESS
TRIG
SS1–
SS1+
SS2+
SS2–
SS1
SS2
SS3
BAT
IG
VC
MSW
C36
Steering Sensor

(Cont. next page)

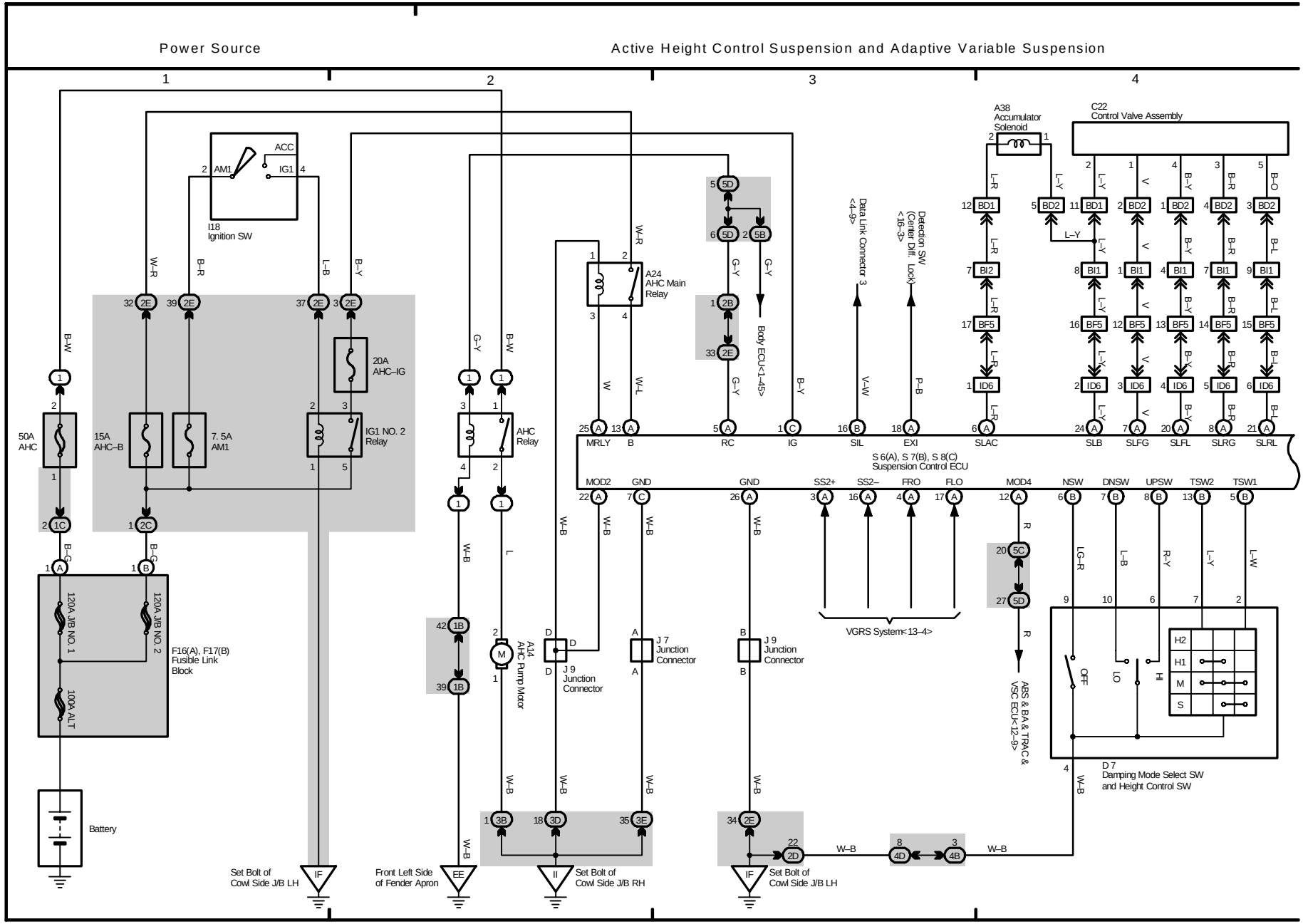

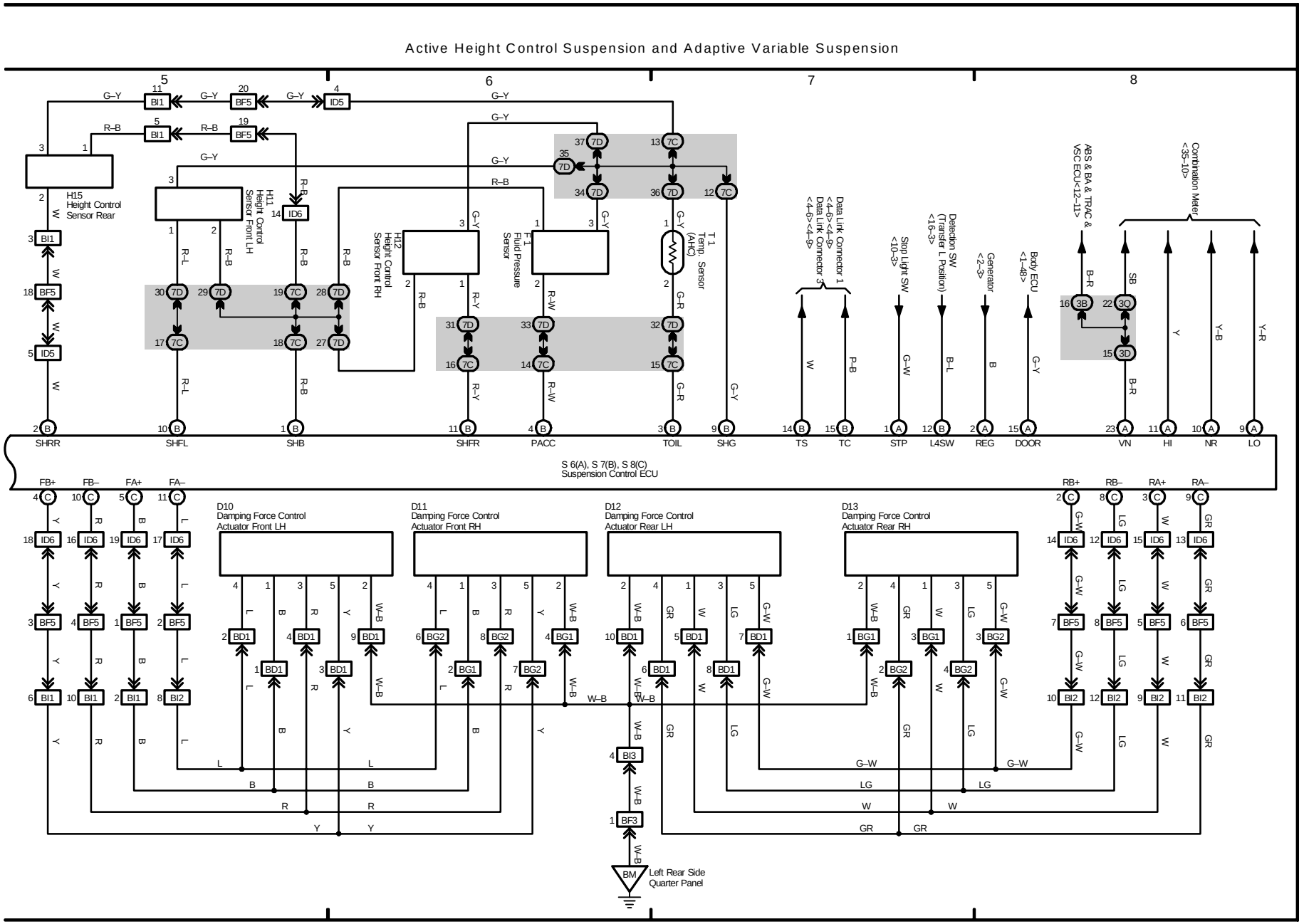
Active Height Control Suspension and Adaptive Variable Suspension
5
6
7
8
H15
Height Control
Sensor Rear
H11
Height Control
Sensor Front LH
H12
Height Control
Sensor Front RH
T1
Fluid Pressure
Sensor
T1
Temp. Sensor
(AHC)
Data Link Connector 1
<4–6><4–9>
Data Link Connector 3
<4–6><4–9>
Stop Light SW
<10–3>
Detection SW
(Transfer L Position)
<16–3>
Generator
<2–3>
Body ECU
<1–48>
ABS & BA & TRAC &
VSC ECU<12–11>
Combination Meter
<35–10>
SHRR
SHFL
SHB
SHFR
PACC
TOIL
SHG
TS
TC
STP
L4SW
REG
DOOR
VN
HI
NR
LO
S 6(A), S 7(B), S 8(C)
Suspension Control ECU
FB+
FB–
FA+
FA–
RB+
RB–
RA+
RA–
D10
Damping Force Control
Actuator Front LH
D11
Damping Force Control
Actuator Front RH
D12
Damping Force Control
Actuator Rear LH
D13
Damping Force Control
Actuator Rear RH
BM
Left Rear Side
Quarter Panel

(Cont. next page)

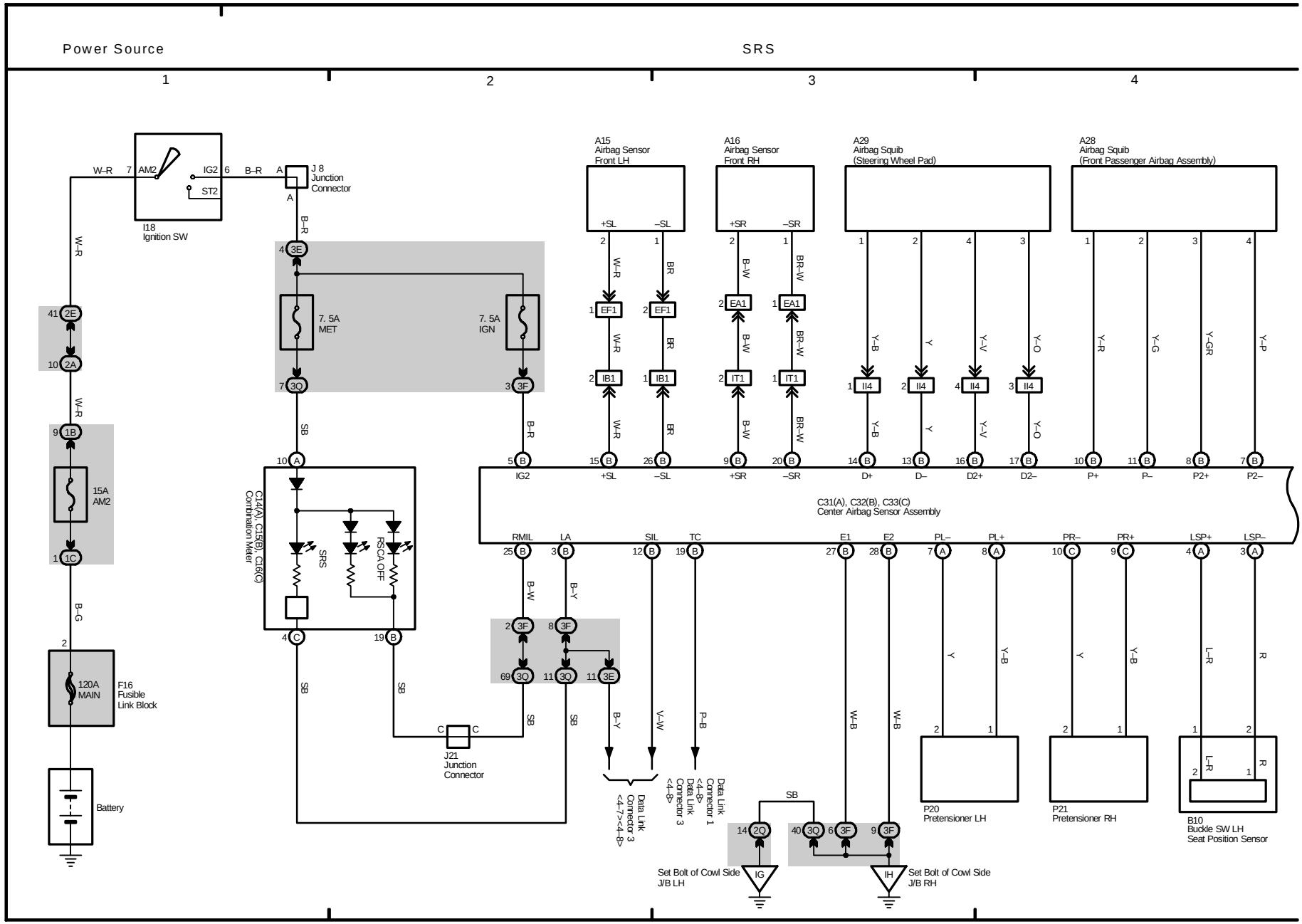

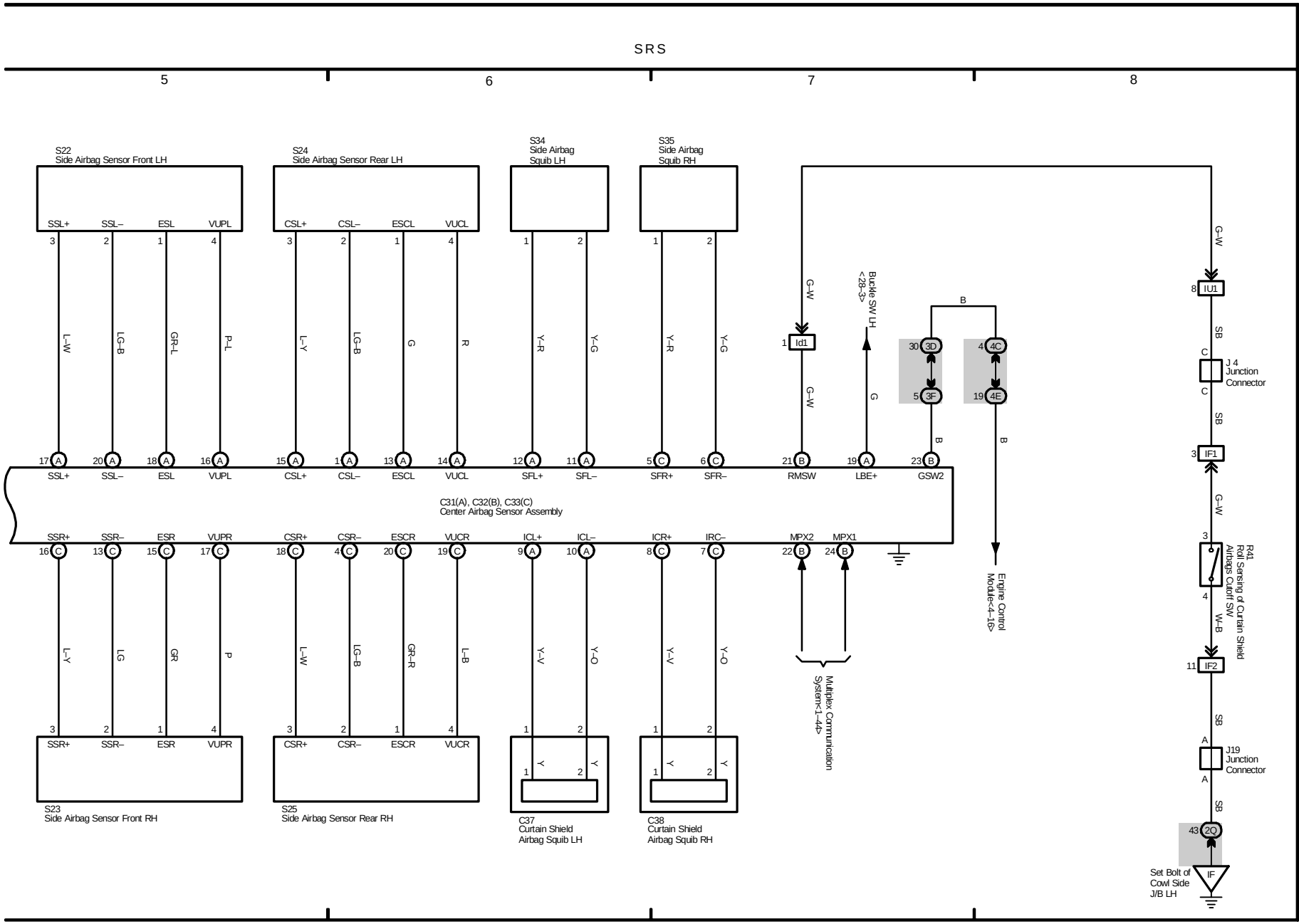
SRS
5
6
7
8
S22
Side Airbag Sensor Front LH
SSL+
SSL–
ESL
VUPL
S24
Side Airbag Sensor Rear LH
CSL+
CSL–
ESCL
VUCL
S34
Side Airbag
Squib LH
S35
Side Airbag
Squib RH
L–W
LG–B
GR–L
P–L
L–Y
LG–B
G
R
Y–R
Y–G
Y–R
Y–G
G–W
Buckle SW LH
<28–3>
G
B
Id1
3D
3F
4C
4E
IU1
J 4
Junction
Connector
IF1
IF2
R41
Roll Sensing of Curtain Shield
Airbags Cutoff SW
W–B
J19
Junction
Connector
2Q
IF
Set Bolt of
Cowl Side
J/B LH
SB
SSL+
SSL–
ESL
VUPL
CSL+
CSL–
ESCL
VUCL
SFL+
SFL–
SFR+
SFR–
RMSW
LBE+
GSW2
C31(A), C32(B), C33(C)
Center Airbag Sensor Assembly
SSR+
SSR–
ESR
VUPR
CSR+
CSR–
ESCR
VUCR
ICL+
ICL–
ICR+
IRC–
MPX2
MPX1
L–Y
LG
GR
P
L–W
LG–B
GR–R
L–B
Y–V
Y–O
Y–V
Y–O
Multiplex Communication
System<1–44>
Engine Control
Module<4–16>
S23
Side Airbag Sensor Front RH
S25
Side Airbag Sensor Rear RH
C37
Curtain Shield
Airbag Squib LH
C38
Curtain Shield
Airbag Squib RH

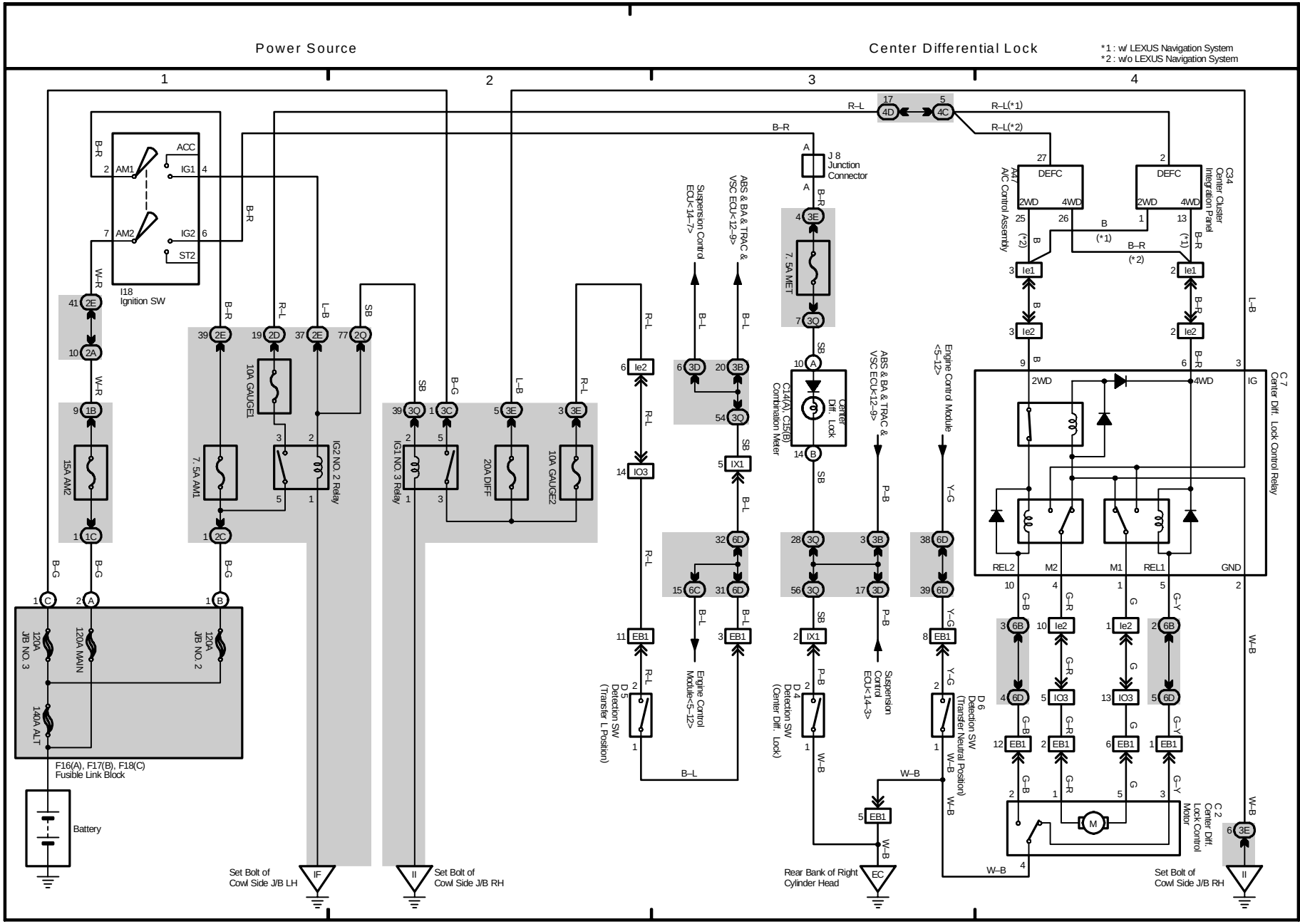
Power Source
Center Differential Lock
*1 : w/ LEXUS Navigation System
*2 : w/o LEXUS Navigation System
I18 Ignition SW
ACC
IG1
IG2
ST2
AM1
AM2
15A AM2
7.5A AM1
10A GAUGE1
IG2 NO. 2 Relay
IG1 NO. 3 Relay
20A DIFF
10A GAUGE2
7.5A MET
J 8 Junction Connector
A47 A/C Control Assembly
C34 Center Cluster Integration Panel
DEFC
C7 Center Diff. Lock Control Relay
C2 Center Diff. Lock Control Motor
Suspension Control ECU<14-7>
ABS & BA & TRAC & VSC ECU<12-9>
C14(A), C15(B) Combination Meter
Center Diff. Lock
ABS & BA & TRAC & VSC ECU<12-9>
Engine Control Module <5-12>
Suspension Control ECU<14-3>
Engine Control Module<5-12>
D 5 Detection SW (Transfer L Position)
D 4 Detection SW (Center Diff. Lock)
D 6 Detection SW (Transfer Neutral Position)
120A JB NO. 3
120A MAIN
120A JB NO. 2
140A ALT
F16(A), F17(B), F18(C) Fusible Link Block
Battery
Set Bolt of Cowl Side J/B LH
Set Bolt of Cowl Side J/B RH
Rear Bank of Right Cylinder Head
Set Bolt of Cowl Side J/B RH

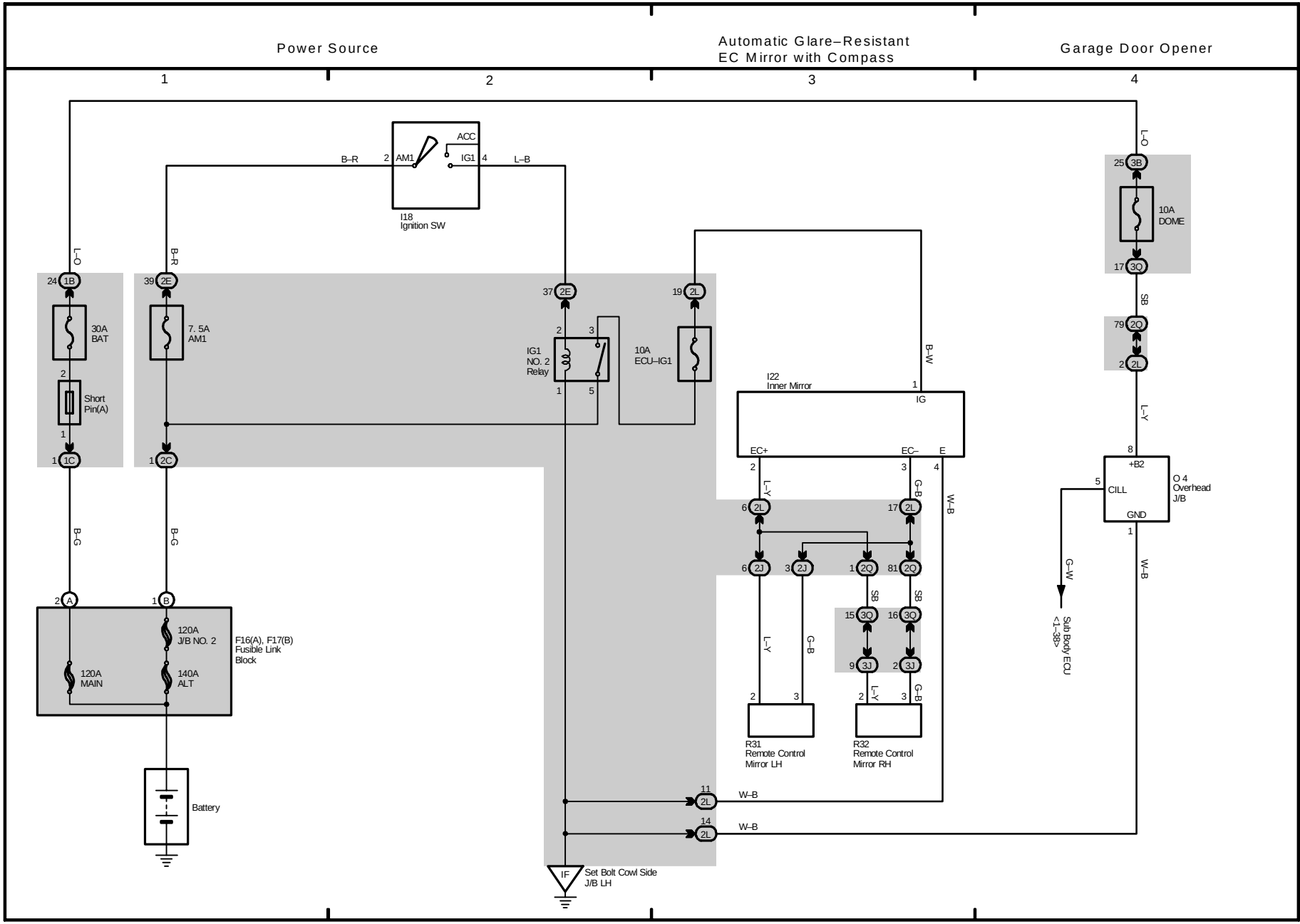
Power Source
Automatic Glare–Resistant EC Mirror with Compass
Garage Door Opener
1
2
3
4
ACC
AM1
IG1
B–R
L–B
I18 Ignition SW
L–O
24 1B
30A BAT
2
Short Pin(A)
1
1 1C
B–G
2 A
39 2E
7. 5A AM1
1 2C
B–G
1 B
120A J/B NO. 2
120A MAIN
140A ALT
F16(A), F17(B) Fusible Link Block
Battery
37 2E
IG1 NO. 2 Relay
10A ECU–IG1
19 2L
B–W
I22 Inner Mirror
IG
EC+
EC–
E
L–Y
6 2L
6 2J
3 2J
G–B
17 2L
1 2Q
81 2Q
SB
15 3Q
16 3Q
9 3J
2 3J
R31 Remote Control Mirror LH
R32 Remote Control Mirror RH
W–B
11 2L
14 2L
IF
Set Bolt Cowl Side J/B LH
25 3B
10A DOME
17 3Q
79 2Q
2 2L
8
+B2
CILL
GND
O 4 Overhead J/B
G–W
Sub Body ECU <1–38>
W–B

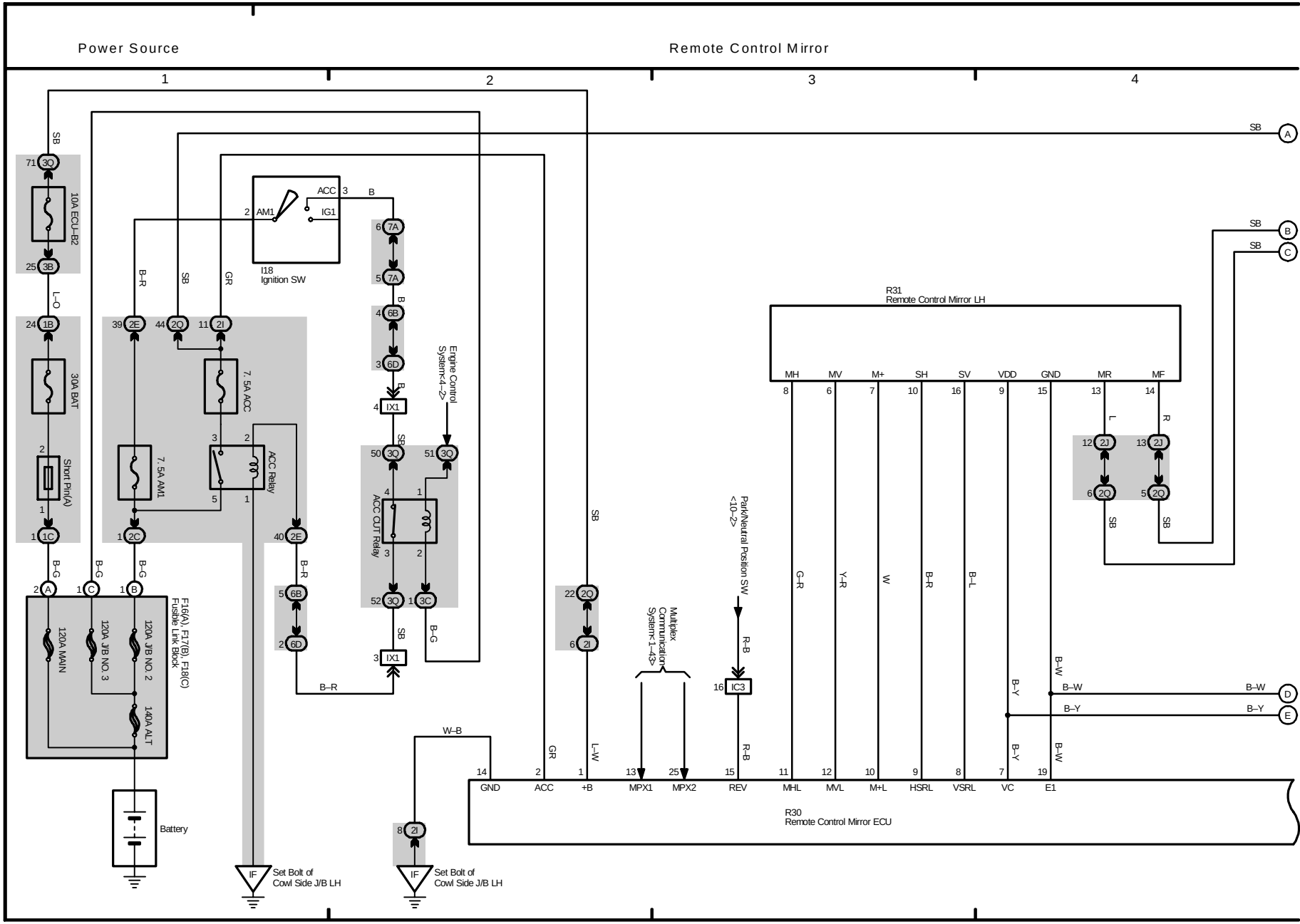
Power Source
Remote Control Mirror
1
2
3
4
10A ECU-B2
30A BAT
Short Pin(A)
7.5A ACC
7.5A AM1
ACC Relay
ACC CUT Relay
Engine Control System<4~2>
I18 Ignition SW
ACC
IG1
AM1
F16(A), F17(B), F18(C) Fusible Link Block
120A MAIN
120A J/B NO. 3
120A J/B NO. 2
140A ALT
Battery
Set Bolt of Cowl Side J/B LH
R31 Remote Control Mirror LH
MH
MV
M+
SH
SV
VDD
GND
MR
MF
Park/Neutral Position SW <10~2>
Multiplex Communication System<1~43>
R30 Remote Control Mirror ECU
GND
ACC
+B
MPX1
MPX2
REV
MHL
MVL
M+L
HSRL
VSRL
VC
E1

Remote Control Mirror

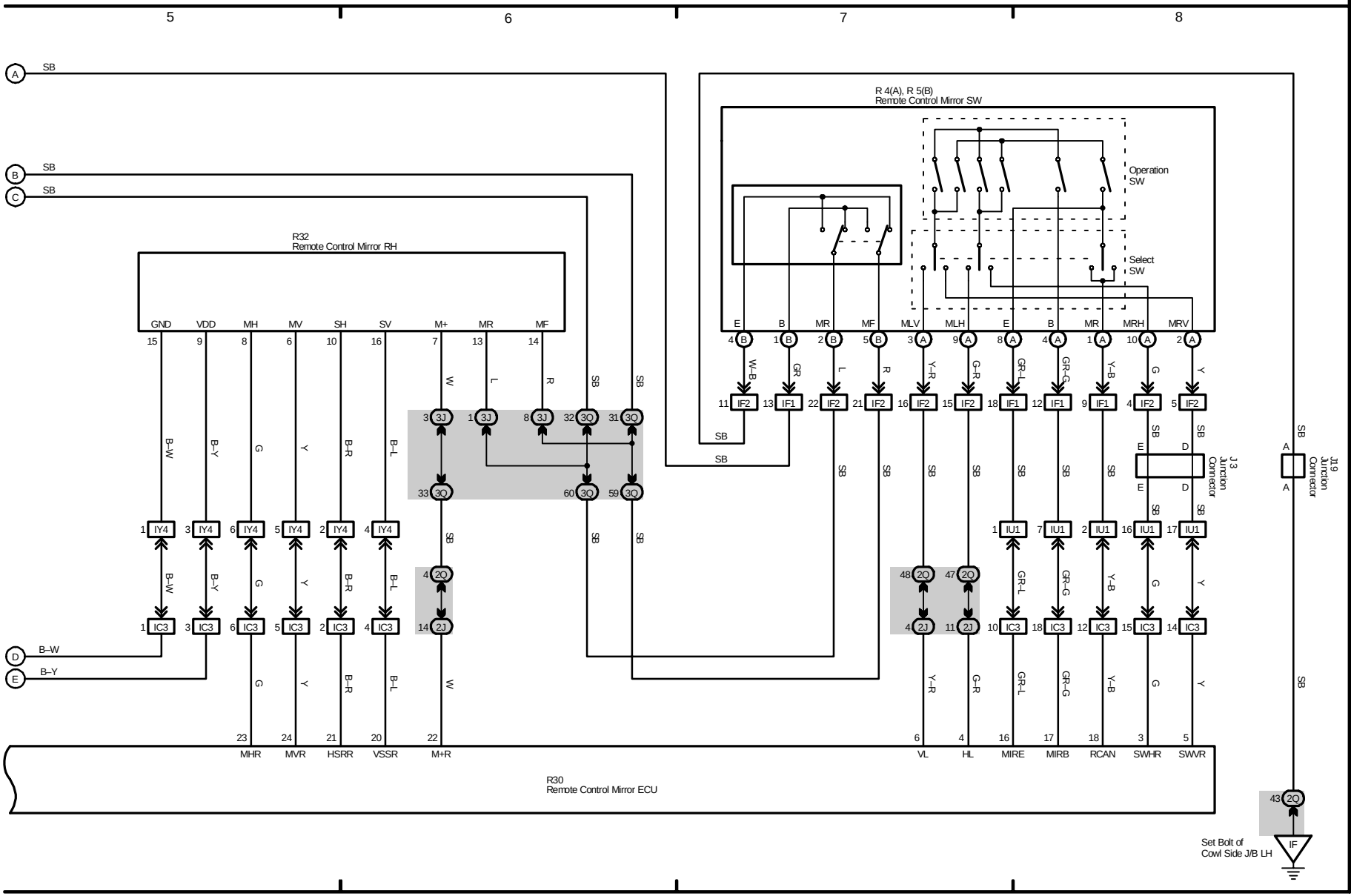

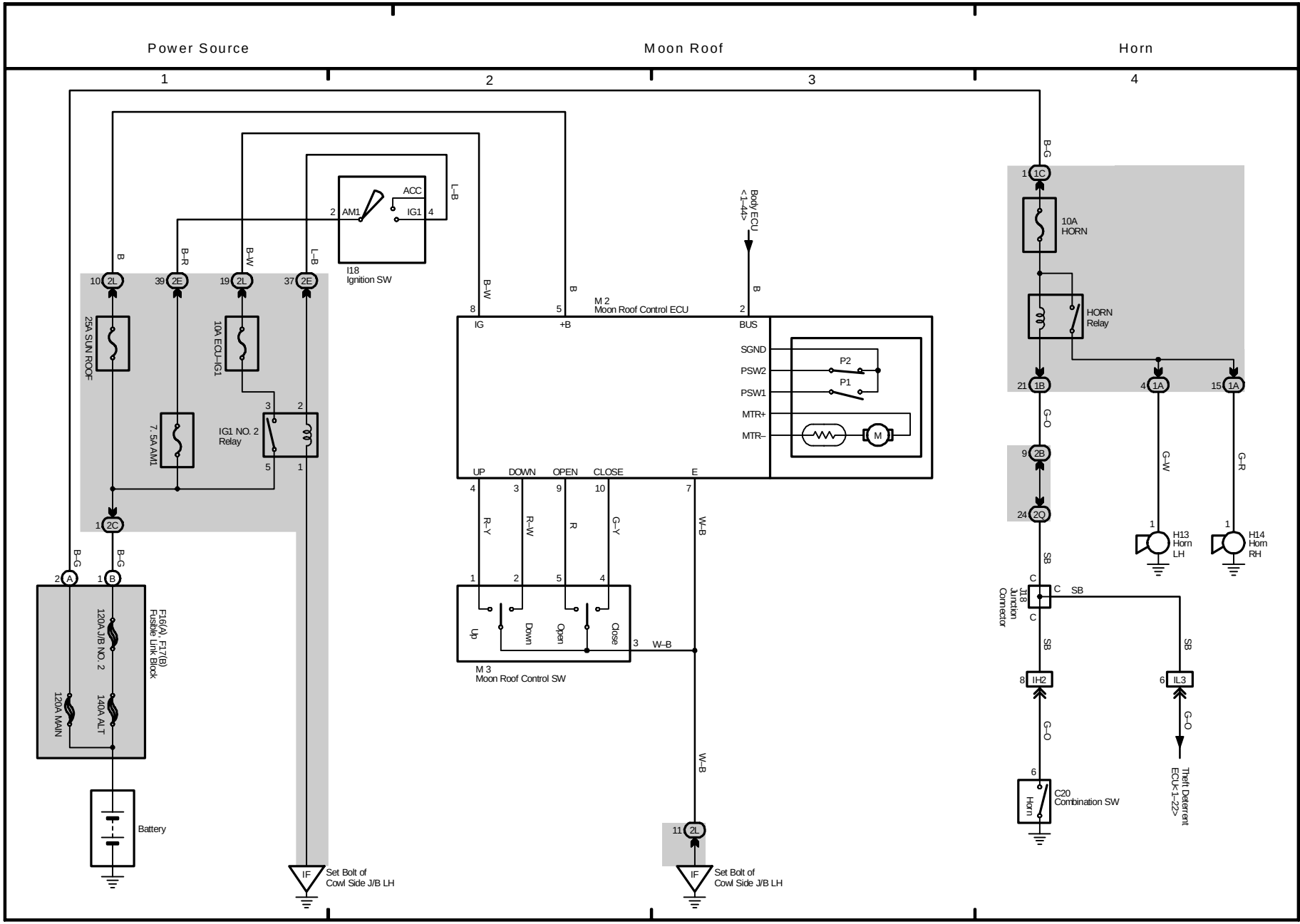
Power Source
Moon Roof
Horn
1
2
3
4
I18
Ignition SW
ACC
AM1
IG1
25A SUN ROOF
10A ECU-IG1
7. 5A AM1
IG1 NO. 2
Relay
F16(A), F17(B)
Fusible Link Block
120A J/B NO. 2
120A MAIN
140A ALT
Battery
Set Bolt of
Cowl Side J/B LH
M 2
Moon Roof Control ECU
IG
+B
BUS
Body ECU
<1-44>
SGND
PSW2
PSW1
MTR+
MTR–
P2
P1
M
UP
DOWN
OPEN
CLOSE
E
M 3
Moon Roof Control SW
Up
Down
Open
Close
10A
HORN
HORN
Relay
H13
Horn
LH
H14
Horn
RH
J18
Junction
Connector
IH2
IL3
C20
Combination SW
Horn
Theft Deterrent
ECU<1-22>

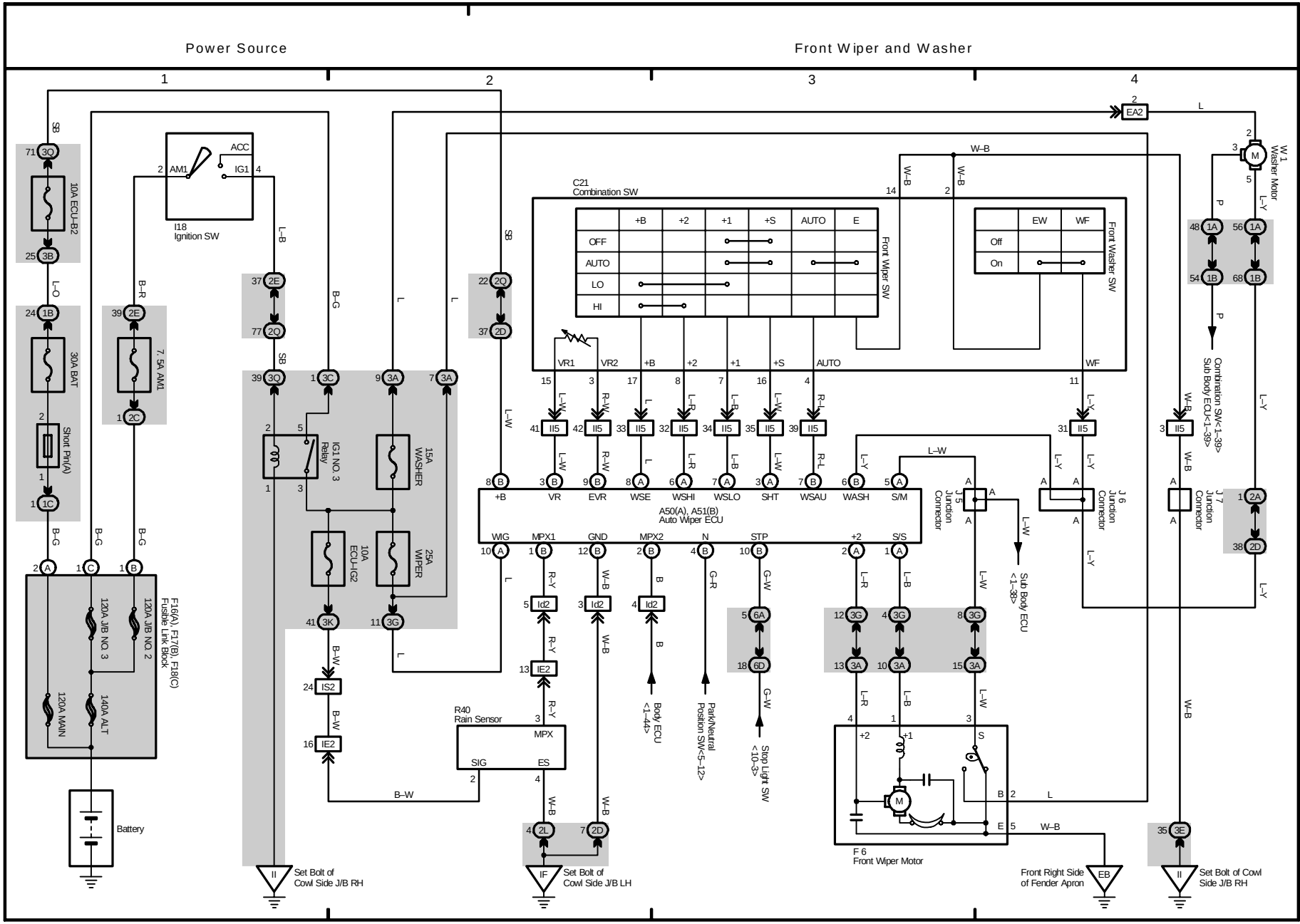
Power Source
Front Wiper and Washer
1
2
3
4
10A ECU-B2
30A BAT
Short Pin(A)
7.5A AM1
I18
Ignition SW
ACC
AM1
IG1
IG1 NO. 3 Relay
15A WASHER
10A ECU-IG2
25A WIPER
F16(A), F17(B), F18(C)
Fusible Link Block
120A J/B NO. 3
120A J/B NO. 2
120A MAIN
140A ALT
Battery
Set Bolt of Cowl Side J/B RH
Set Bolt of Cowl Side J/B LH
R40
Rain Sensor
MPX
SIG
ES
C21
Combination SW
Front Wiper SW
Front Washer SW
OFF
AUTO
LO
HI
Off
On
VR1
VR2
A50(A), A51(B)
Auto Wiper ECU
VR
EVR
WSE
WSHI
WSLO
SHT
WSAU
WASH
S/M
WIG
MPX1
GND
MPX2
N
STP
S/S
Body ECU
<1–44>
Park/Neutral
Position SW<5–12>
Stop Light SW
<10–3>
Sub Body ECU
<1–38>
J 5
Junction
Connector
J 6
Junction
Connector
J 7
Junction
Connector
Combination SW<1–39>
Sub Body ECU<1–39>
W 1
Washer Motor
F 6
Front Wiper Motor
Front Right Side
of Fender Apron
Set Bolt of Cowl
Side J/B RH

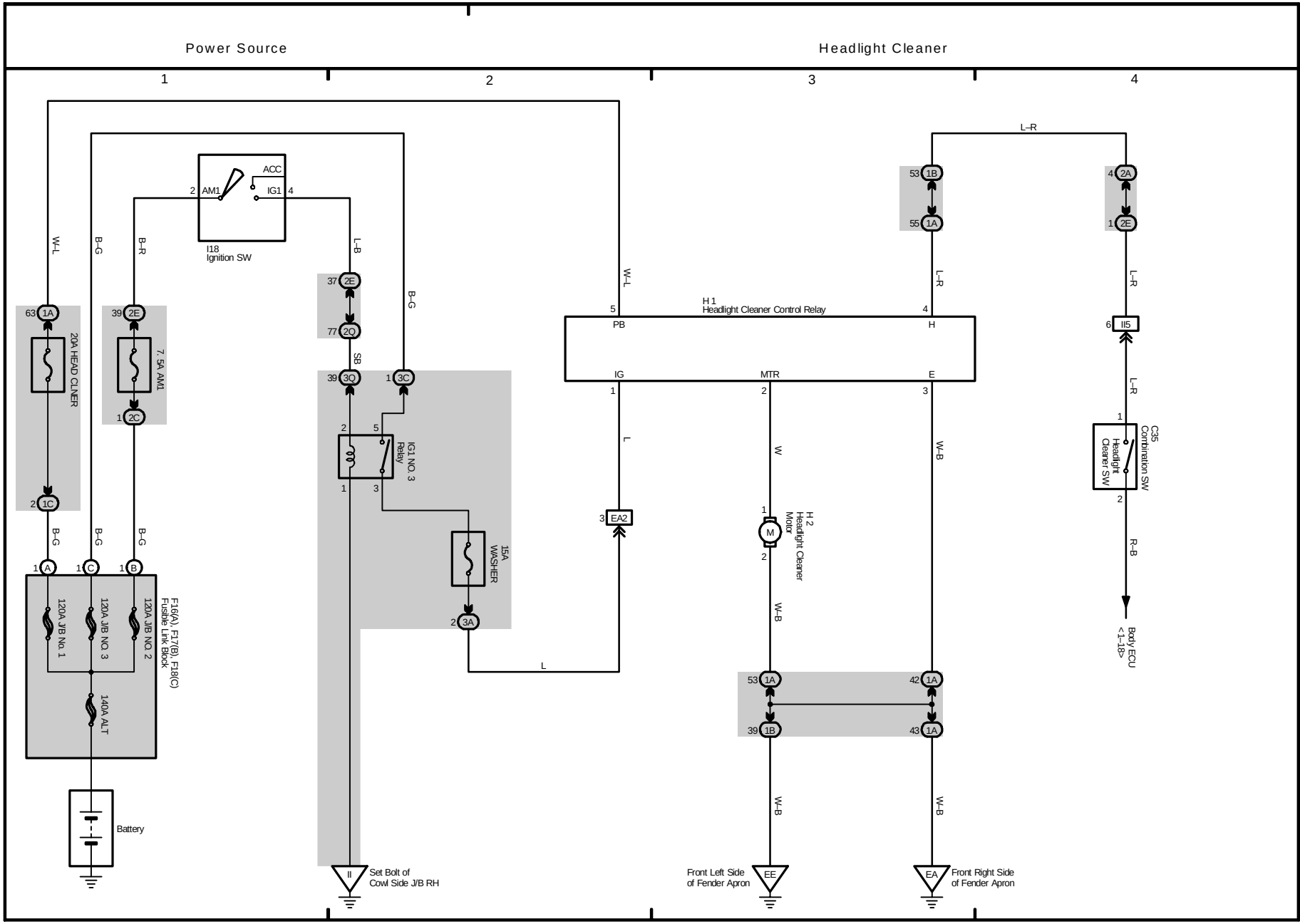
Power Source
Headlight Cleaner
1
2
3
4
ACC
AM1
IG1
I18
Ignition SW
20A HEAD CLNER
7.5A AM1
IG1 NO. 3 Relay
15A WASHER
F16(A), F17(B), F18(C) Fusible Link Block
120A J/B No. 1
120A J/B NO. 3
120A J/B NO. 2
140A ALT
Battery
Set Bolt of Cowl Side J/B RH
H 1 Headlight Cleaner Control Relay
PB
IG
MTR
H
E
H 2 Headlight Cleaner Motor
Front Left Side of Fender Apron
Front Right Side of Fender Apron
C35 Combination SW
Headlight Cleaner SW
Body ECU <1-18>

(Cont. next page)

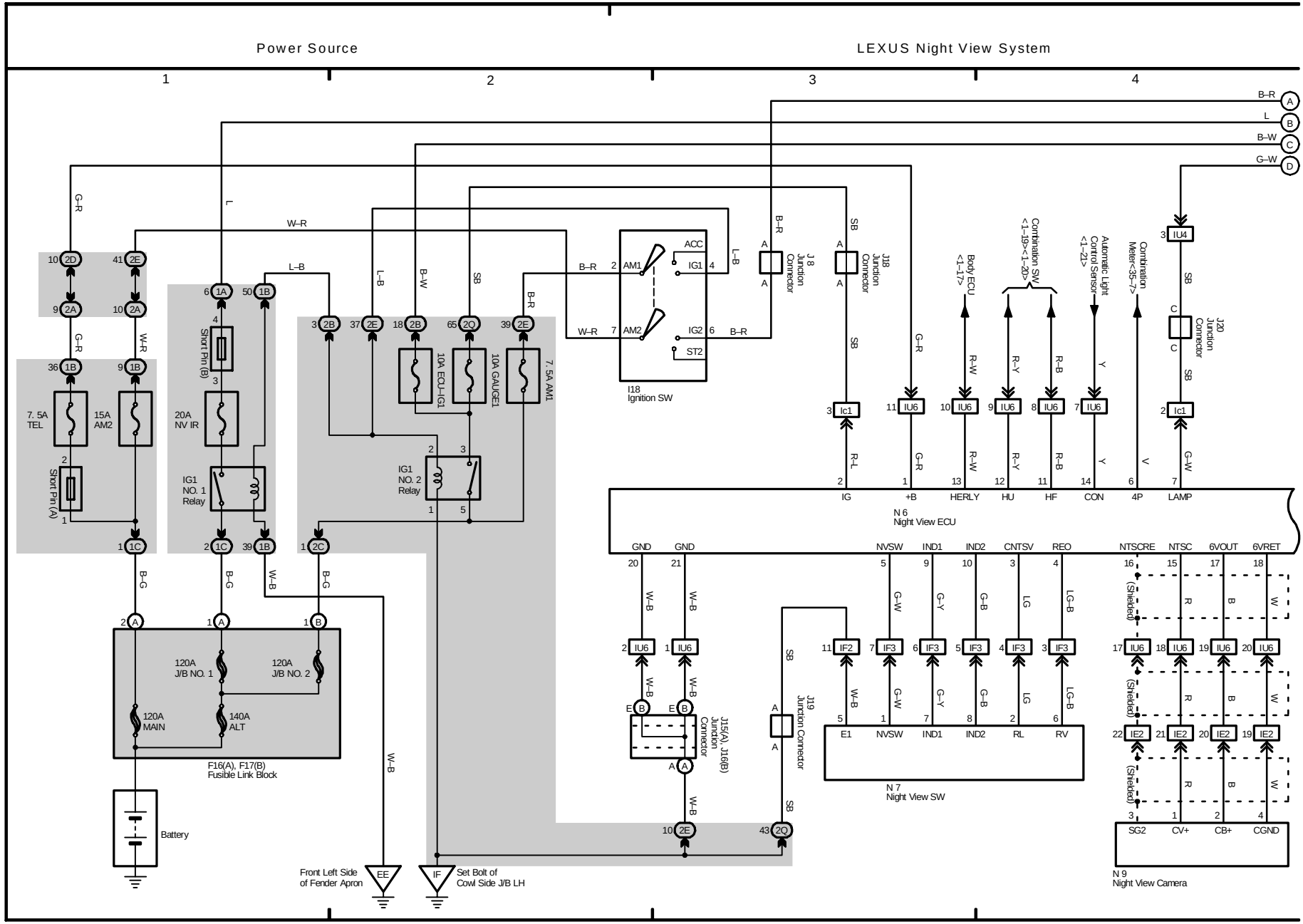

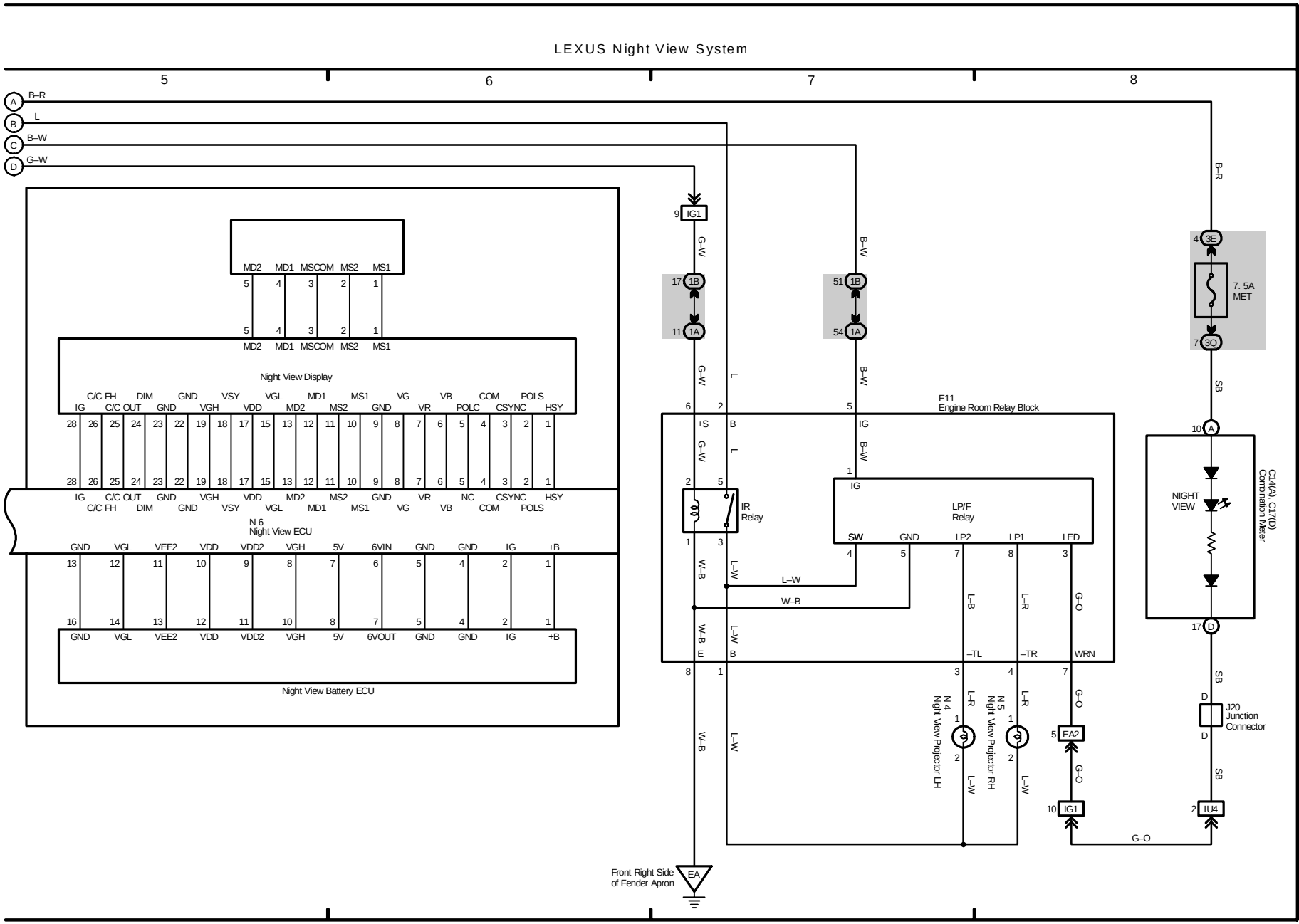
LEXUS Night View System
5
6
7
8
A B–R
B L
C B–W
D G–W
Night View Display
MD2 MD1 MSCOM MS2 MS1
C/C FH DIM GND VSY VGL MD1 MS1 VG VB COM POLS
IG C/C OUT GND VGH VDD MD2 MS2 GND VR POLC CSYNC HSY
N 6
Night View ECU
GND VGL VEE2 VDD VDD2 VGH 5V 6VIN GND GND IG +B
GND VGL VEE2 VDD VDD2 VGH 5V 6VOUT GND GND IG +B
Night View Battery ECU
IG1
1B
1A
3E
3Q
7. 5A
MET
E11
Engine Room Relay Block
+S
IG
B
E
IR
Relay
LP/F
Relay
SW GND LP2 LP1 LED
–TL –TR WRN
N 4
Night View Projector LH
N 5
Night View Projector RH
EA2
IU4
NIGHT
VIEW
C14(A), C17(D)
Combination Meter
J20
Junction
Connector
Front Right Side
of Fender Apron
EA
B–R
L
B–W
G–W
W–B
L–W
L–B
L–R
G–O
SB

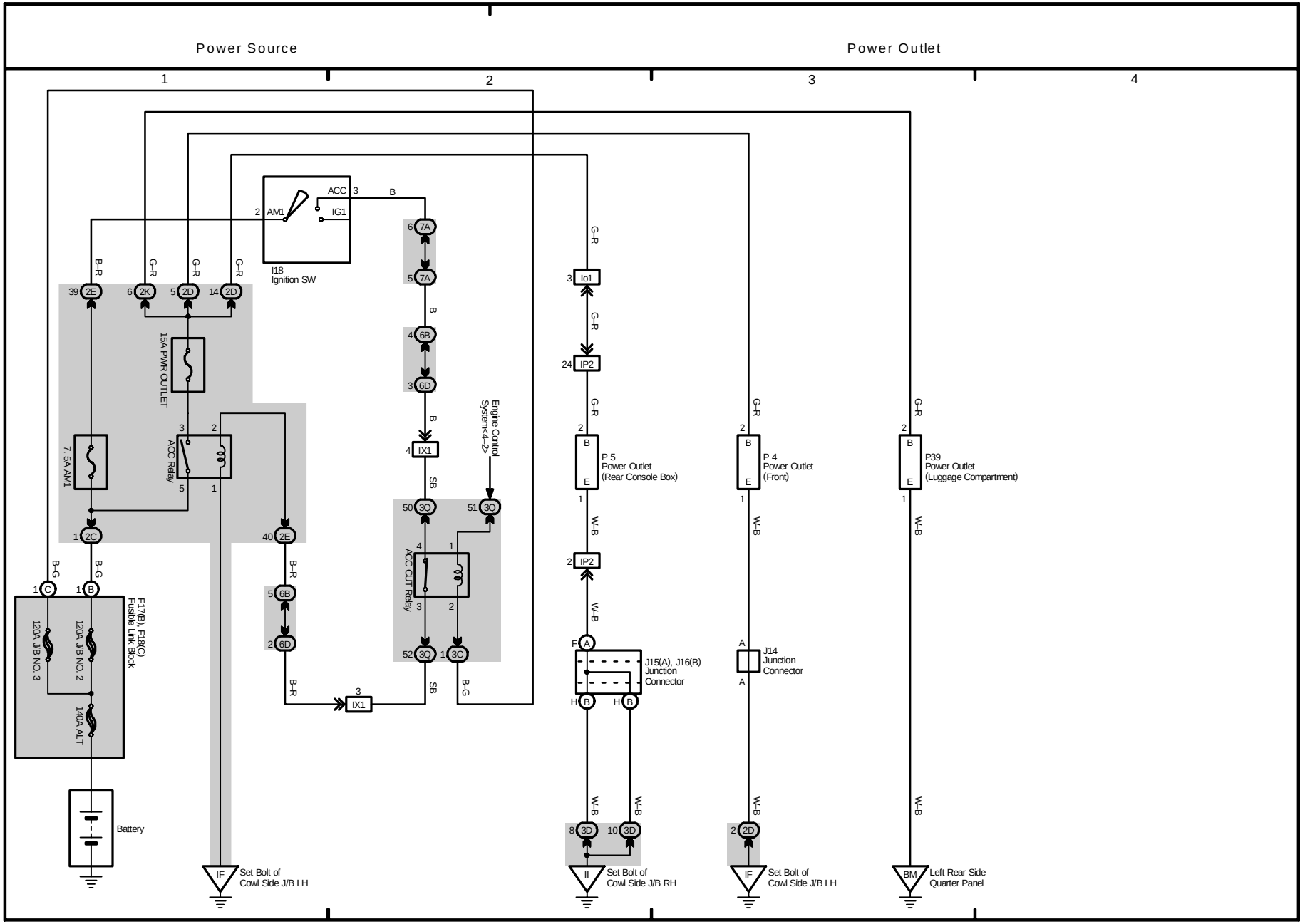
Power Source
Power Outlet
1
2
3
4
I18
Ignition SW
ACC
IG1
AM1
15A PWR OUTLET
7. 5A AM1
ACC Relay
ACC CUT Relay
Engine Control System<4~2>
F17(B), F18(C)
Fusible Link Block
120A J/B NO. 3
120A J/B NO. 2
140A ALT
Battery
P 5
Power Outlet
(Rear Console Box)
P 4
Power Outlet
(Front)
P39
Power Outlet
(Luggage Compartment)
J15(A), J16(B)
Junction
Connector
J14
Junction
Connector
Set Bolt of
Cowl Side J/B LH
Set Bolt of
Cowl Side J/B RH
Set Bolt of
Cowl Side J/B LH
Left Rear Side
Quarter Panel

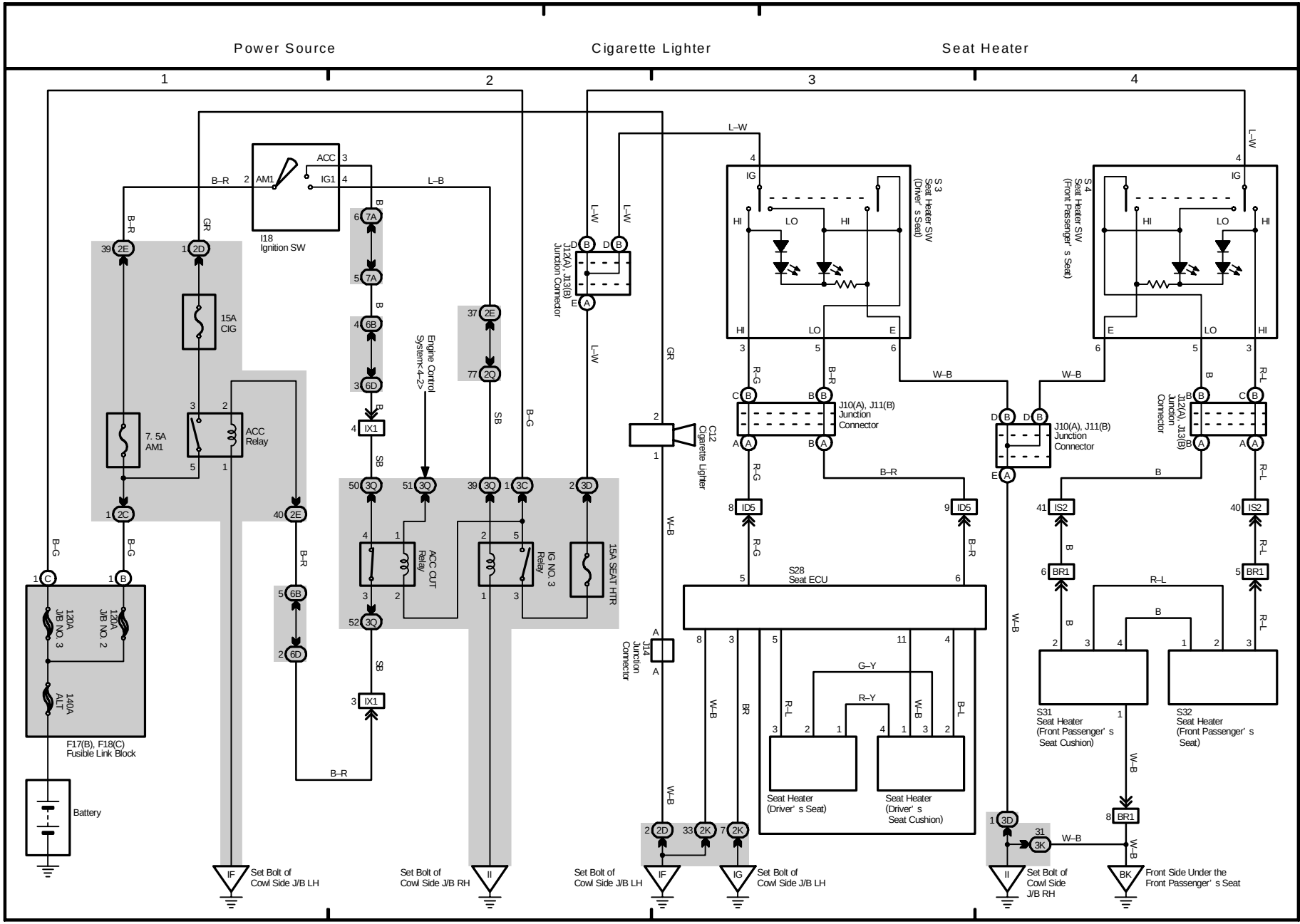
Power Source
Cigarette Lighter
Seat Heater
1
2
3
4
I18
Ignition SW
ACC
IG1
AM1
15A
CIG
7. 5A
AM1
ACC
Relay
Engine Control
System<4-2>
ACC CUT
Relay
IG NO. 3
Relay
15A SEAT HTR
J12(A), J13(B)
Junction Connector
C12
Cigarette Lighter
J14
Junction Connector
S 3
Seat Heater SW
(Driver' s Seat)
S 4
Seat Heater SW
(Front Passenger' s Seat)
J10(A), J11(B)
Junction
Connector
S28
Seat ECU
S31
Seat Heater
(Front Passenger' s
Seat Cushion)
S32
Seat Heater
(Front Passenger' s
Seat)
Seat Heater
(Driver' s Seat)
Seat Heater
(Driver' s
Seat Cushion)
120A
J/B NO. 3
120A
J/B NO. 2
140A
ALT
F17(B), F18(C)
Fusible Link Block
Battery
Set Bolt of
Cowl Side J/B LH
Set Bolt of
Cowl Side J/B RH
Set Bolt of
Cowl Side J/B LH
Set Bolt of
Cowl Side J/B LH
Set Bolt of
Cowl Side
J/B RH
Front Side Under the
Front Passenger' s Seat

M OVERALL ELECTRICAL WIRING DIAGRAM

(Cont. next page)

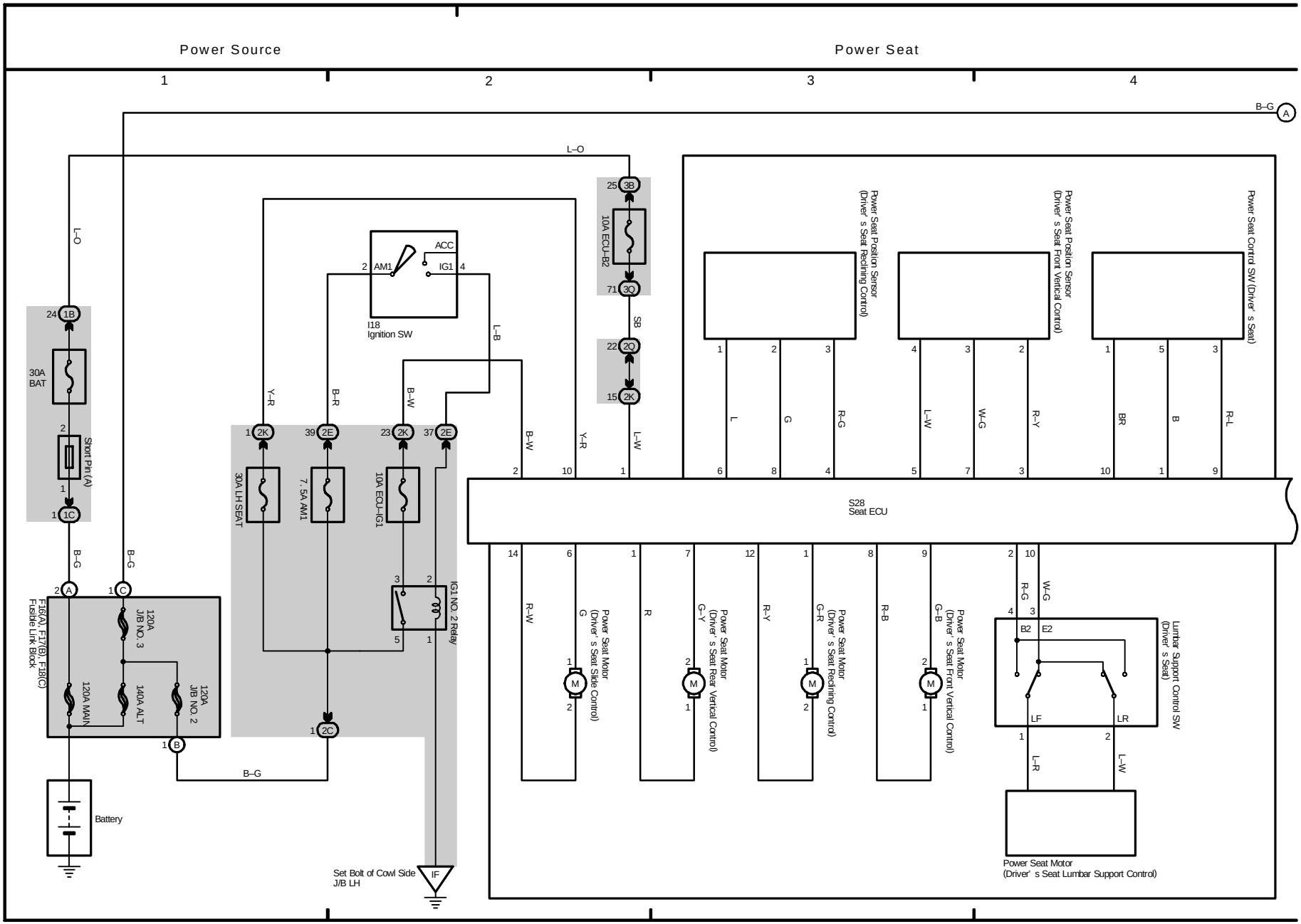

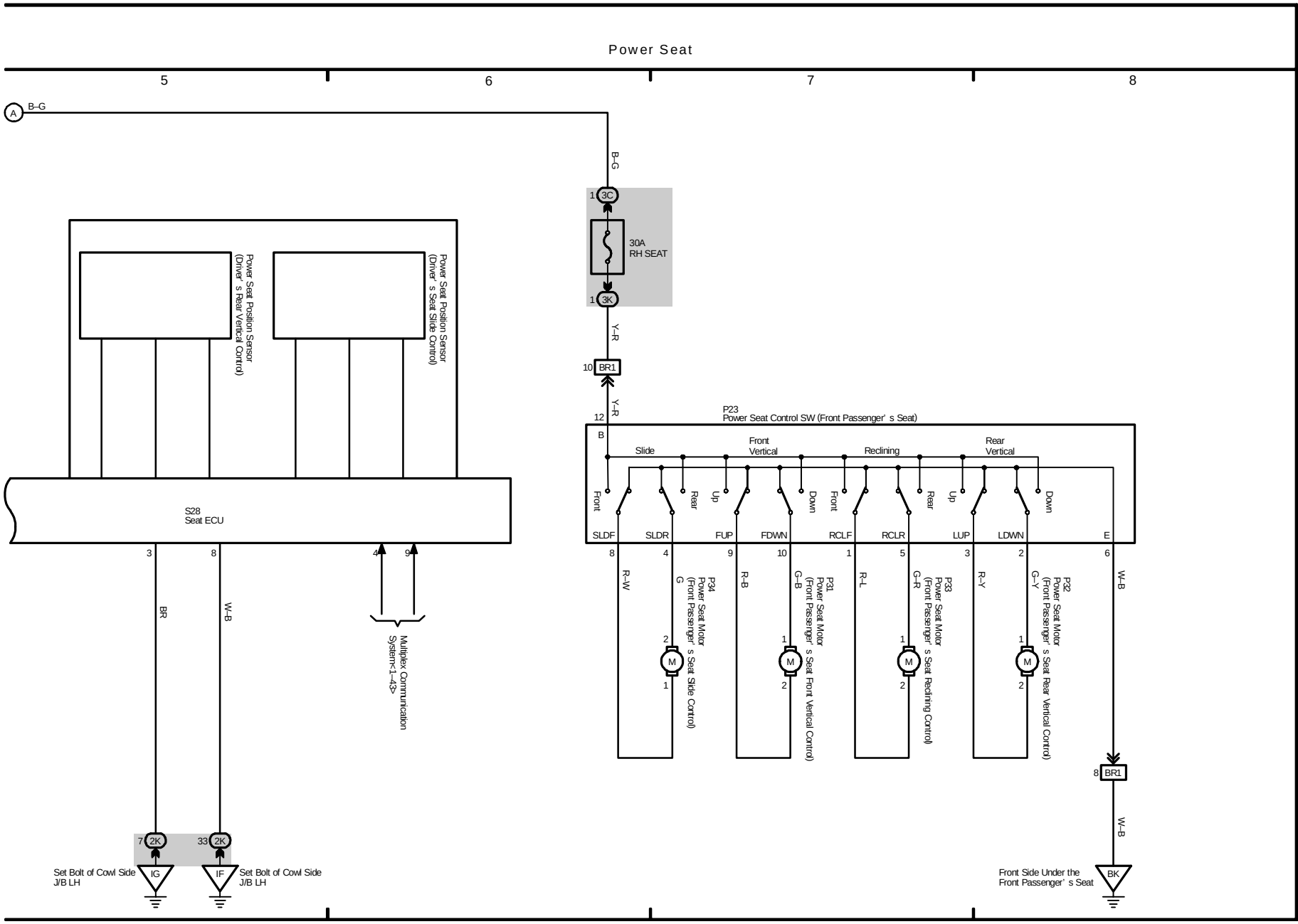
Power Seat
5
6
7
8
A
B–G
B–G
1 3C
30A
RH SEAT
1 3K
Y–R
10 BR1
Y–R
12
P23
Power Seat Control SW (Front Passenger' s Seat)
B
Slide
Front
Vertical
Reclining
Rear
Vertical
Front
Rear
Up
Down
Front
Rear
Up
Down
SLDF
SLDR
FUP
FDWN
RCLF
RCLR
LUP
LDWN
E
8
4
9
10
1
5
3
2
6
R–W
G
R–B
G–B
R–L
G–R
R–Y
G–Y
W–B
P34
Power Seat Motor
(Front Passenger' s Seat Slide Control)
P31
Power Seat Motor
(Front Passenger' s Seat Front Vertical Control)
P33
Power Seat Motor
(Front Passenger' s Seat Reclining Control)
P32
Power Seat Motor
(Front Passenger' s Seat Rear Vertical Control)
M
8 BR1
W–B
BK
Front Side Under the
Front Passenger' s Seat
Power Seat Position Sensor
(Driver' s Rear Vertical Control)
Power Seat Position Sensor
(Driver' s Seat Slide Control)
S28
Seat ECU
3
8
4
9
BR
W–B
Multiplex Communication
System<1–43>
7 2K
33 2K
IG
IF
Set Bolt of Cowl Side
J/B LH
Set Bolt of Cowl Side
J/B LH

M OVERALL ELECTRICAL WIRING DIAGRAM

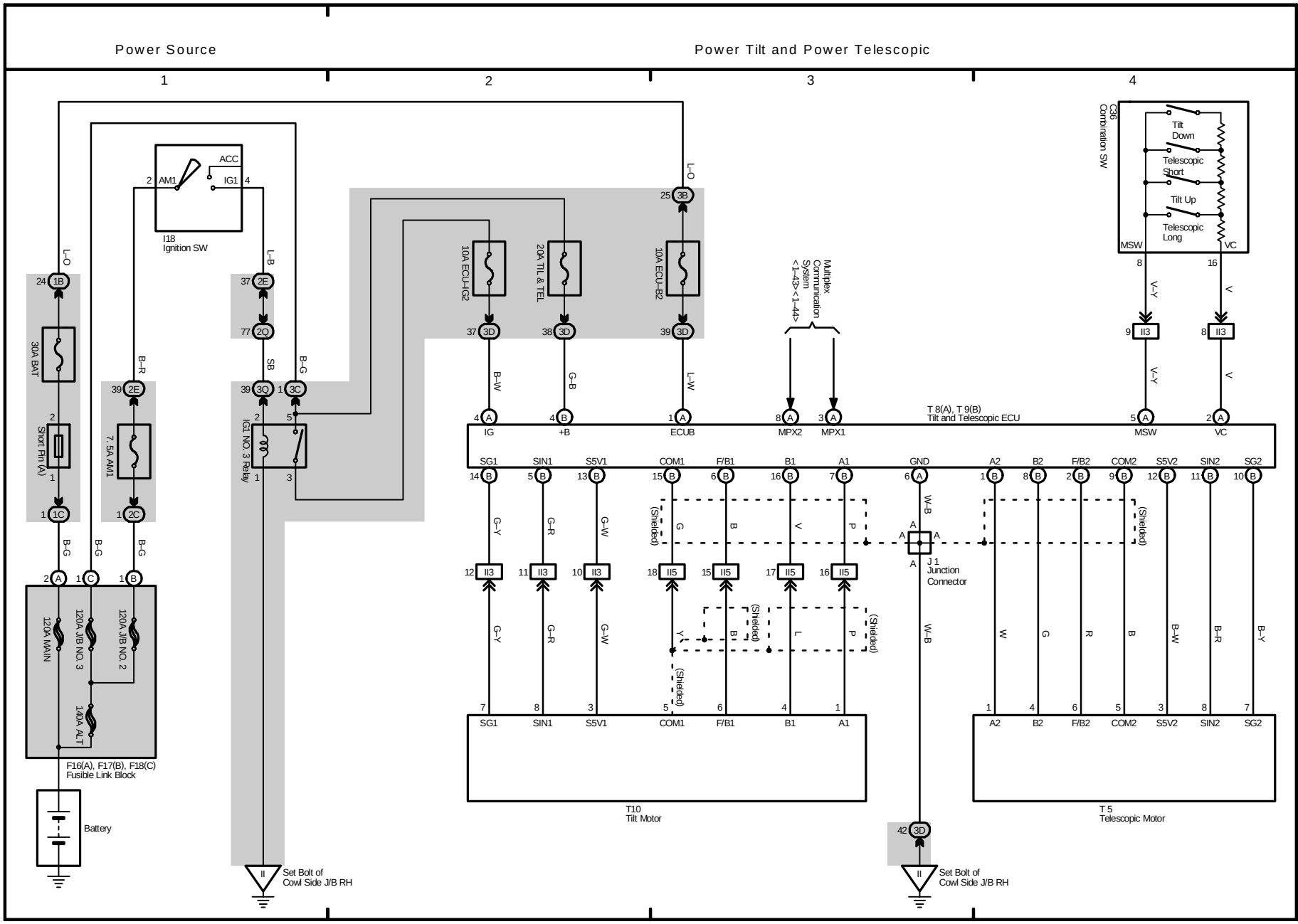
Power Source
Power Tilt and Power Telescopic
1
2
3
4
I18
Ignition SW
ACC
AM1
IG1
30A BAT
Short Pin (A)
7.5A AM1
IG1 NO. 3 Relay
10A ECU-IG2
20A TIL & TEL
10A ECU-B2
Multiplex Communication System
<1-43> <1-44>
C36
Combination SW
Tilt Down
Telescopic Short
Tilt Up
Telescopic Long
MSW
VC
T 8(A), T 9(B)
Tilt and Telescopic ECU
IG
+B
ECUB
MPX2
MPX1
SG1
SIN1
S5V1
COM1
F/B1
B1
A1
GND
A2
B2
F/B2
COM2
S5V2
SIN2
SG2
(Shielded)
J 1
Junction Connector
120A MAIN
120A J/B NO. 3
120A J/B NO. 2
140A ALT
F16(A), F17(B), F18(C)
Fusible Link Block
Battery
Set Bolt of
Cowl Side J/B RH
T10
Tilt Motor
T 5
Telescopic Motor

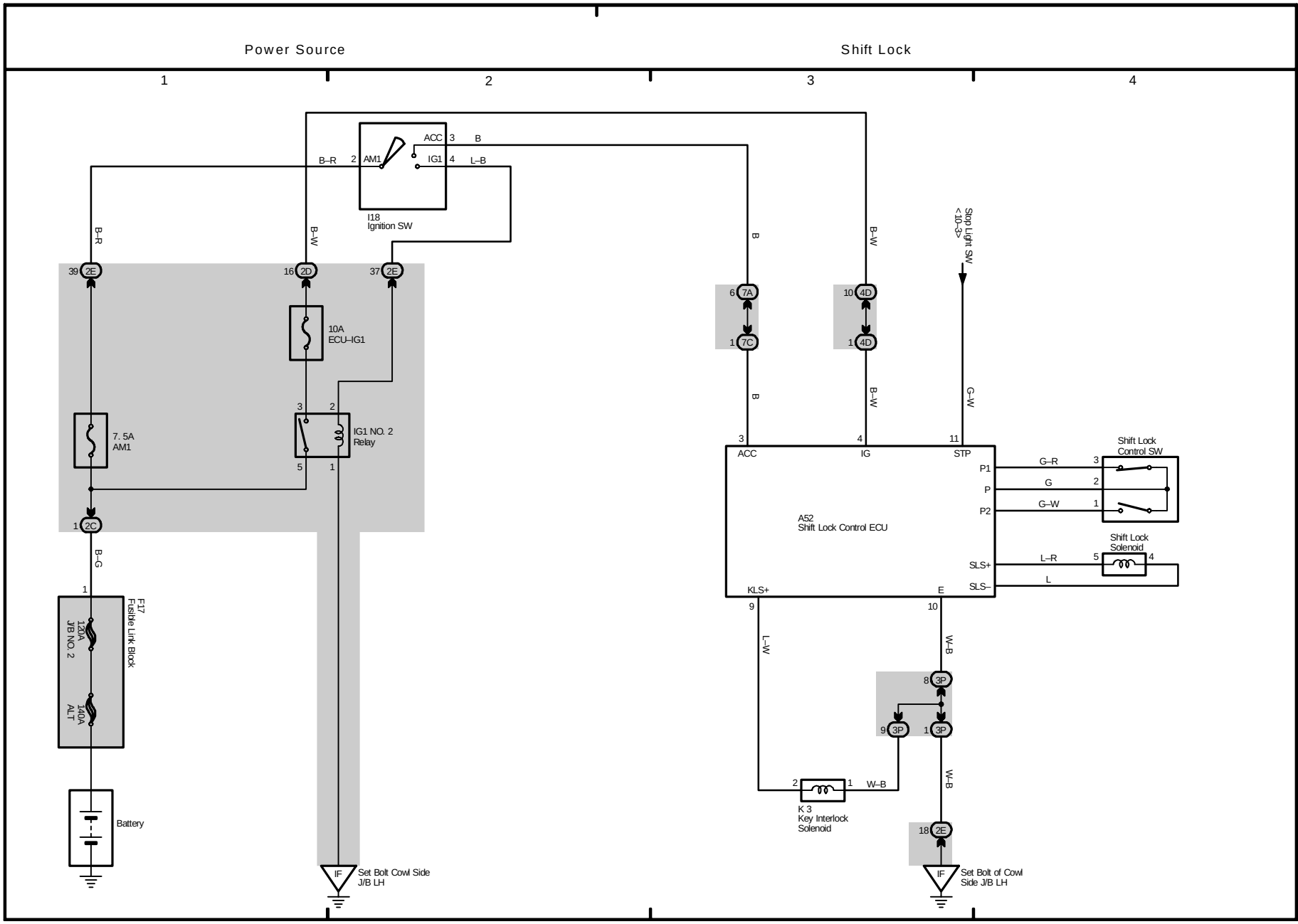
Power Source
Shift Lock
1
2
3
4
I18
Ignition SW
ACC
AM1
IG1
B–R
B
L–B
B–W
39 2E
16 2D
37 2E
10A
ECU–IG1
7. 5A
AM1
IG1 NO. 2
Relay
1 2C
B–G
F17
Fusible Link Block
120A
J/B NO. 2
140A
ALT
Battery
IF
Set Bolt Cowl Side
J/B LH
6 7A
1 7C
10 4D
1 4D
G–W
Stop Light SW
<10–3>
ACC
IG
STP
A52
Shift Lock Control ECU
P1
P
P2
SLS+
SLS–
KLS+
E
G–R
G
L–R
L
Shift Lock
Control SW
Shift Lock
Solenoid
L–W
W–B
8 3P
9 3P
1 3P
K 3
Key Interlock
Solenoid
18 2E
Set Bolt of Cowl
Side J/B LH

M OVERALL ELECTRICAL WIRING DIAGRAM

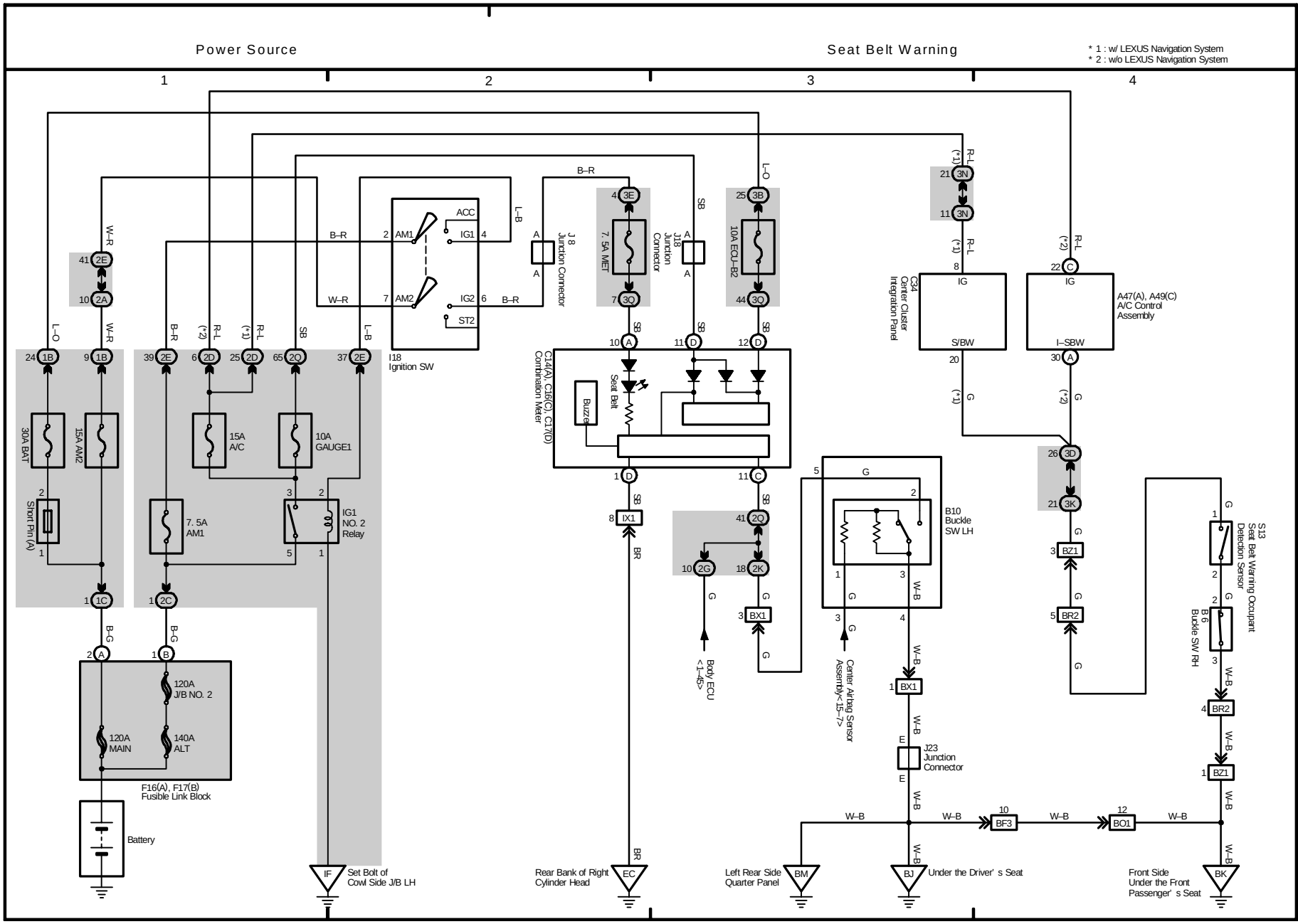
Power Source
Seat Belt Warning
* 1 : w/ LEXUS Navigation System
* 2 : w/o LEXUS Navigation System
1
2
3
4
30A BAT
15A AM2
Short Pin (A)
15A A/C
10A GAUGE1
7. 5A AM1
IG1 NO. 2 Relay
I18 Ignition SW
ACC
IG1
IG2
ST2
AM1
AM2
J 8 Junction Connector
7. 5A MET
J18 Junction Connector
10A ECU-B2
C14(A), C16(C), C17(D) Combination Meter
Seat Belt
Buzzer
C34 Center Cluster Integration Panel
A47(A), A49(C) A/C Control Assembly
B10 Buckle SW LH
S13 Seat Belt Warning Occupant Detection Sensor
B6 Buckle SW RH
Body ECU <1-45>
Center Airbag Sensor Assembly<15-7>
J23 Junction Connector
120A J/B NO. 2
120A MAIN
140A ALT
F16(A), F17(B) Fusible Link Block
Battery
Set Bolt of Cowl Side J/B LH
Rear Bank of Right Cylinder Head
Left Rear Side Quarter Panel
Under the Driver' s Seat
Front Side Under the Front Passenger' s Seat

M OVERALL ELECTRICAL WIRING DIAGRAM

(Cont. next page)

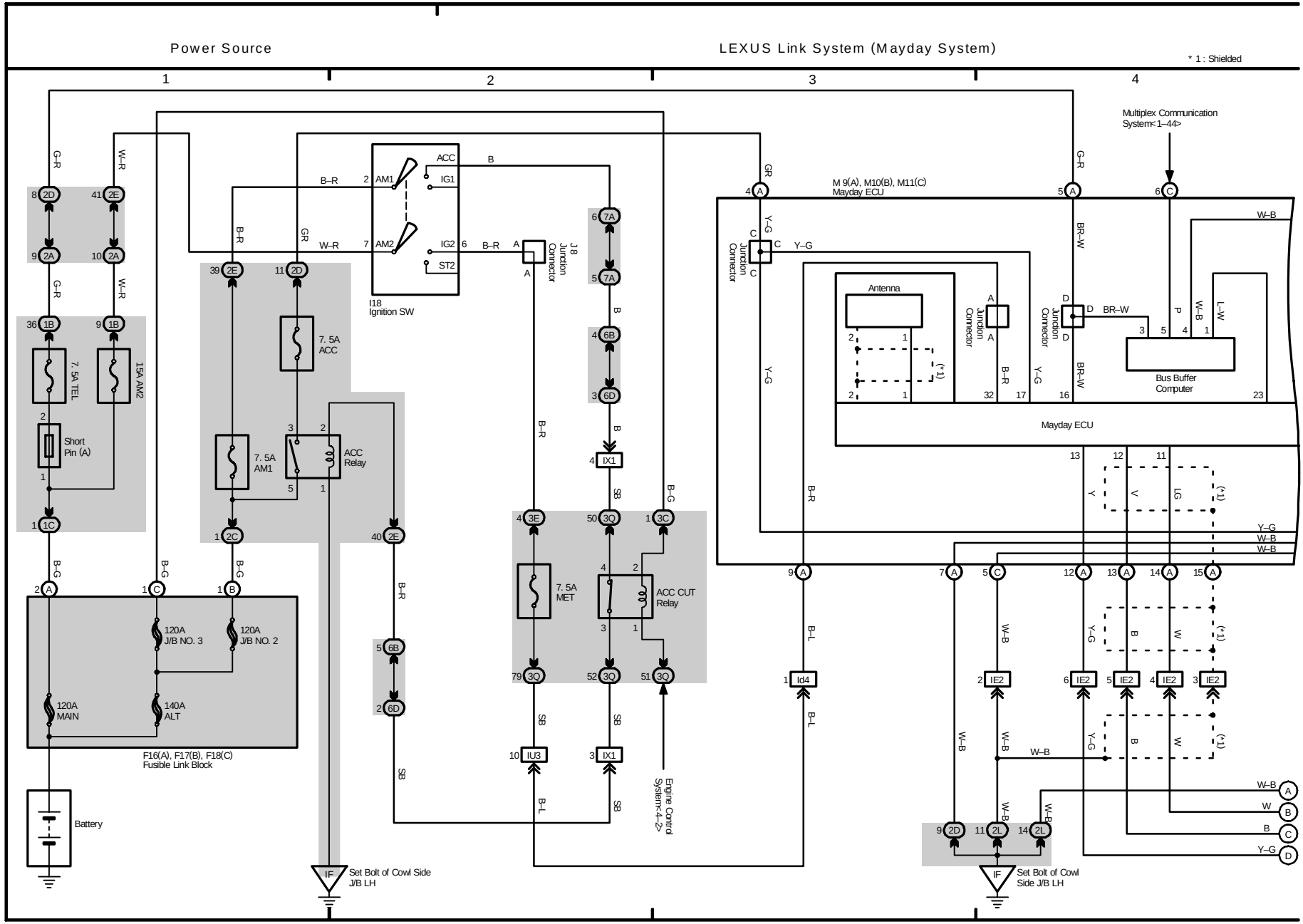

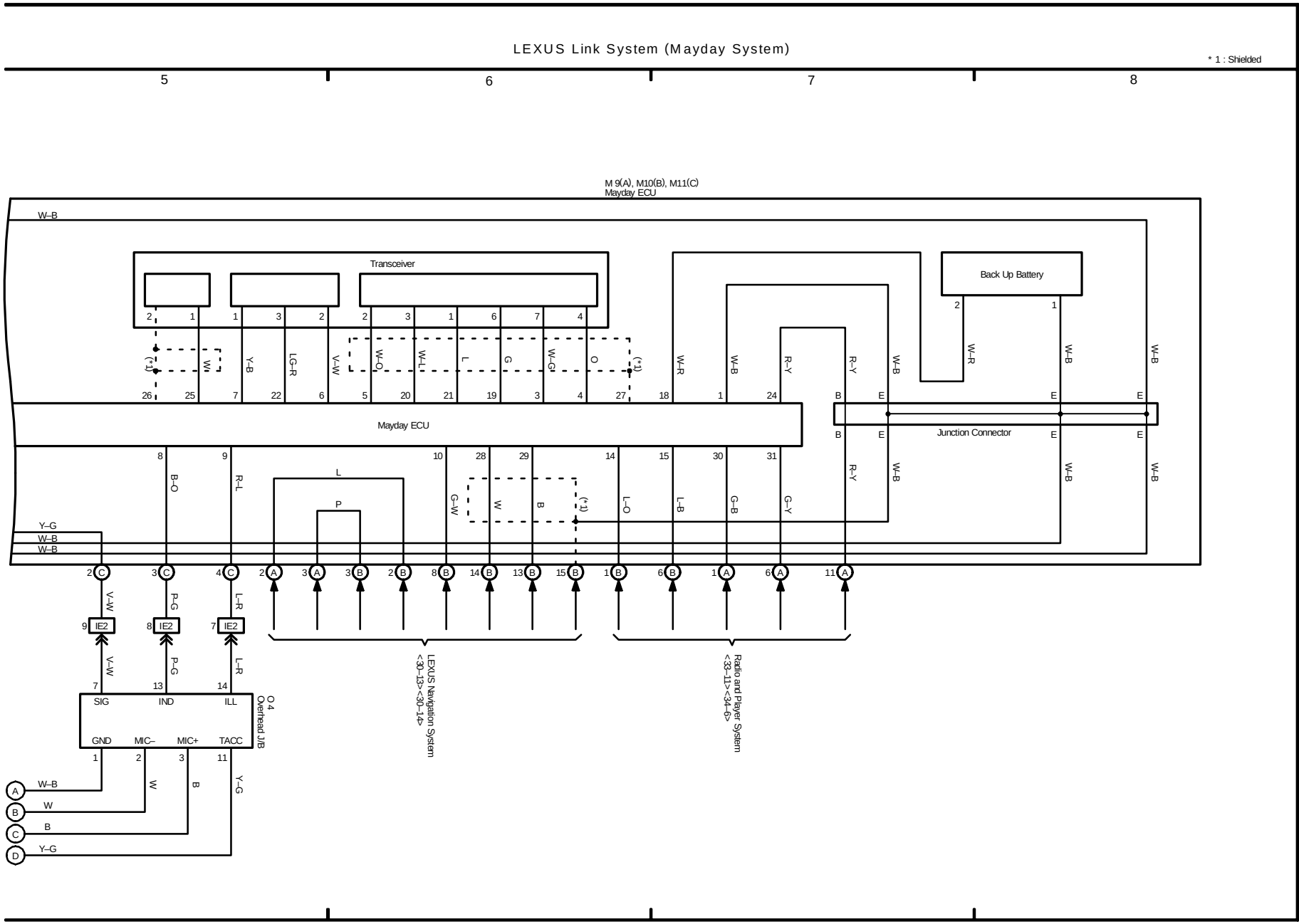
LEXUS Link System (Mayday System)
* 1 : Shielded
5
6
7
8
M 9(A), M10(B), M11(C)
Mayday ECU
Transceiver
Back Up Battery
Mayday ECU
Junction Connector
IE2
O 4
Overhead J/B
SIG
IND
ILL
GND
MIC–
MIC+
TACC
LEXUS Navigation System
<30–13><30–14>
Radio and Player System
<33–11><34–6>
W–B
W
B
Y–G

(Cont. next page)

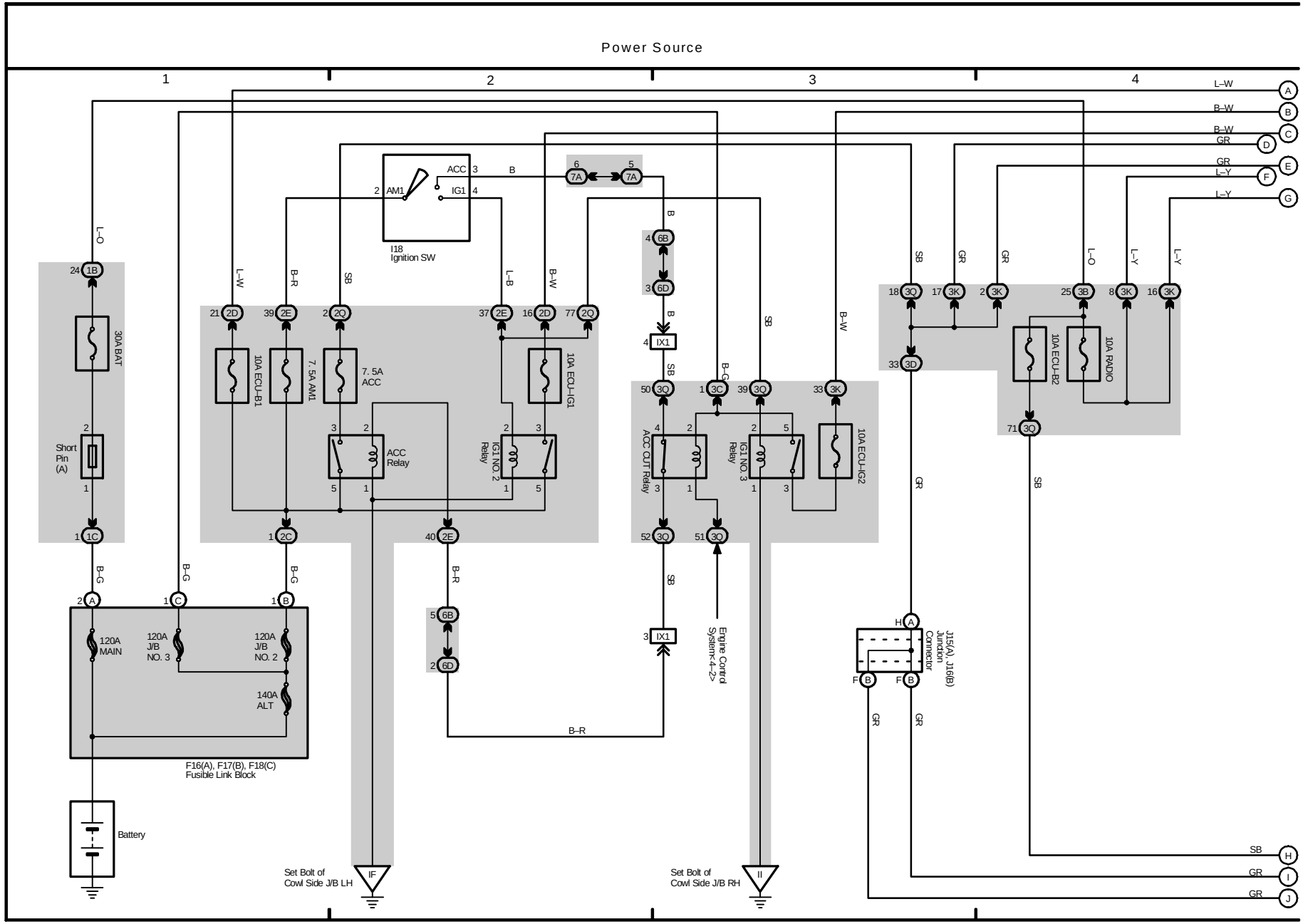

(Cont. next page)

LEXUS Navigation System, LEXUS Parking Assist (Rear View Monitor)

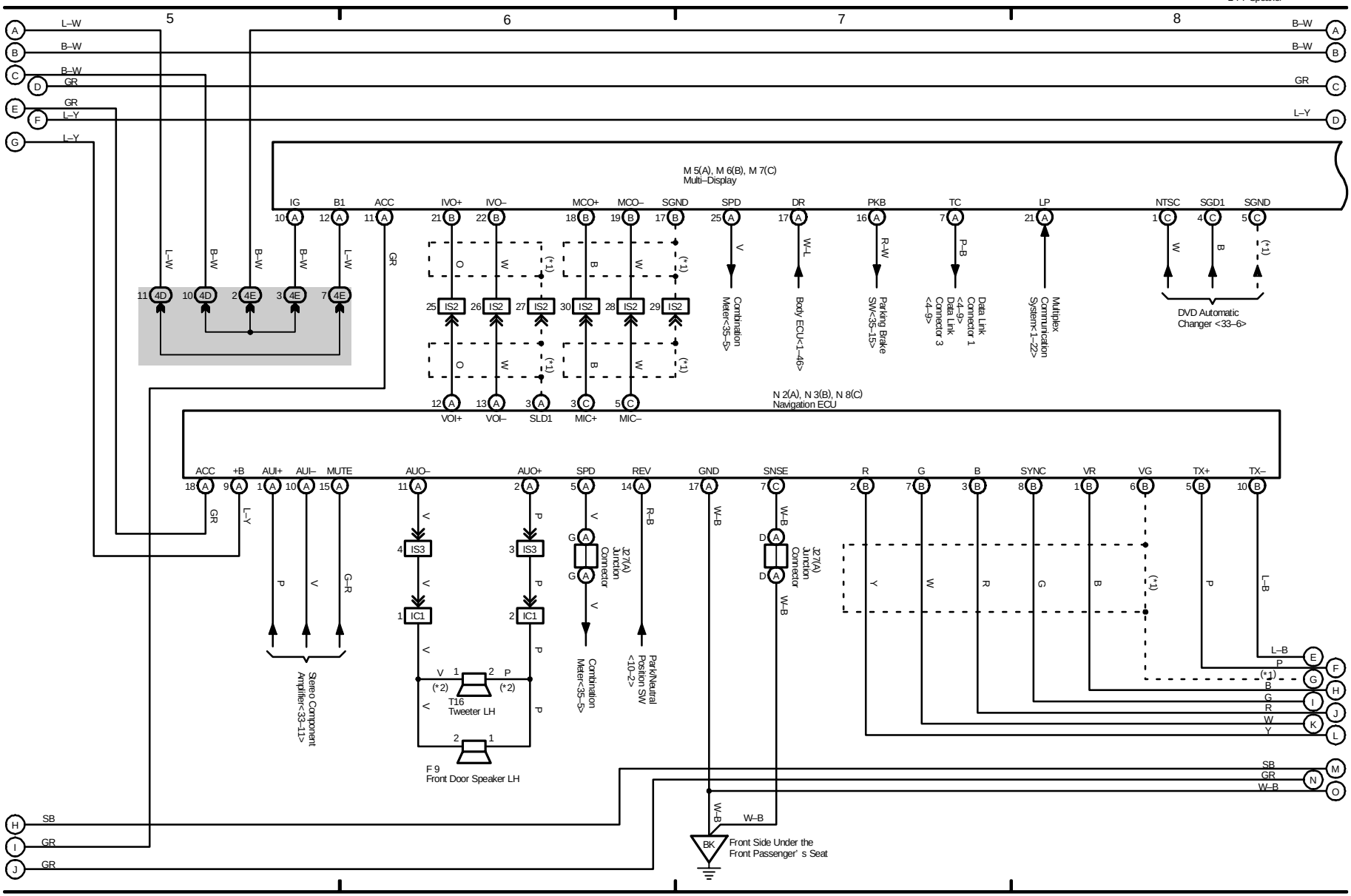

(Cont. next page)

LEXUS Navigation System, LEXUS Parking Assist (Rear View Monitor)

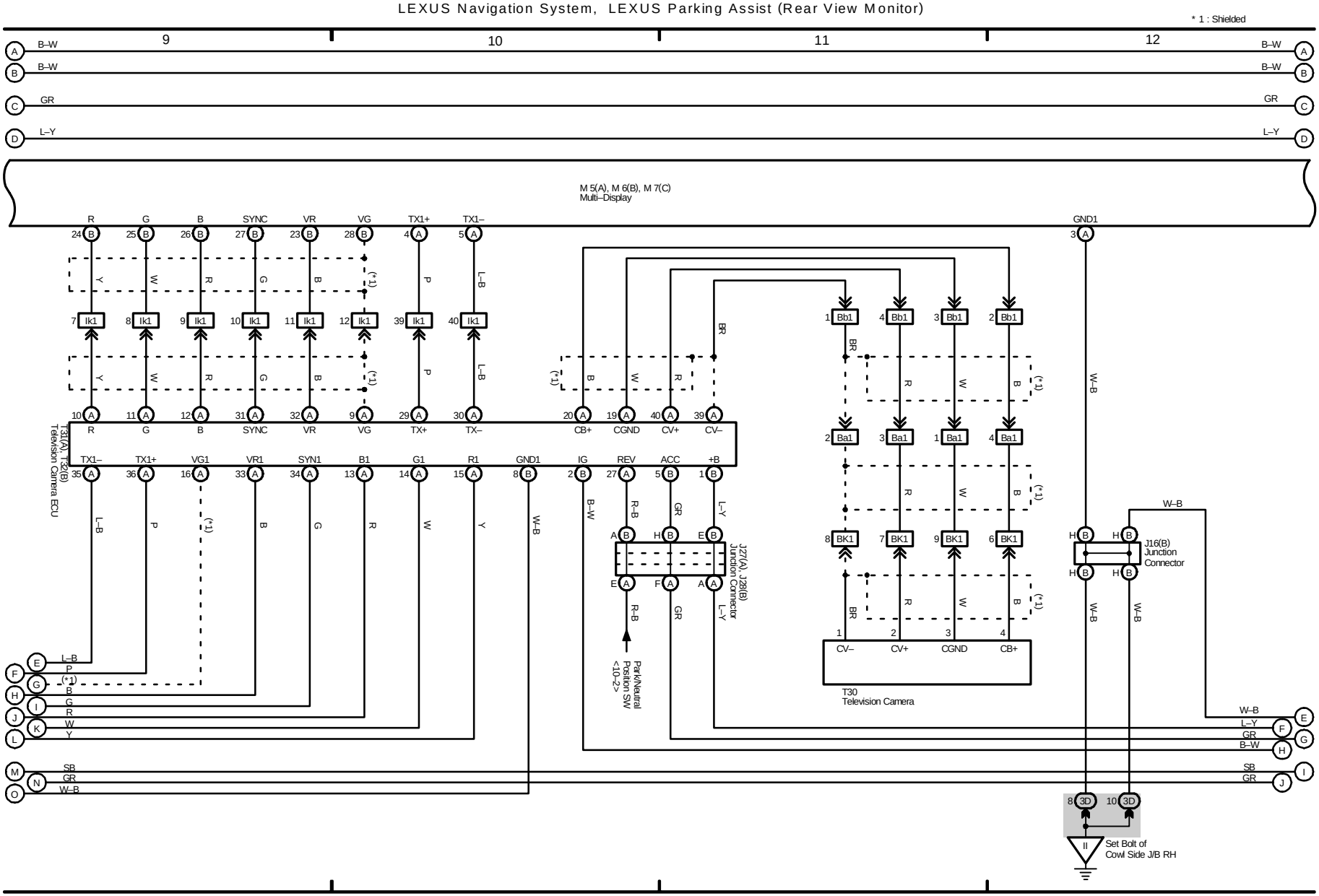

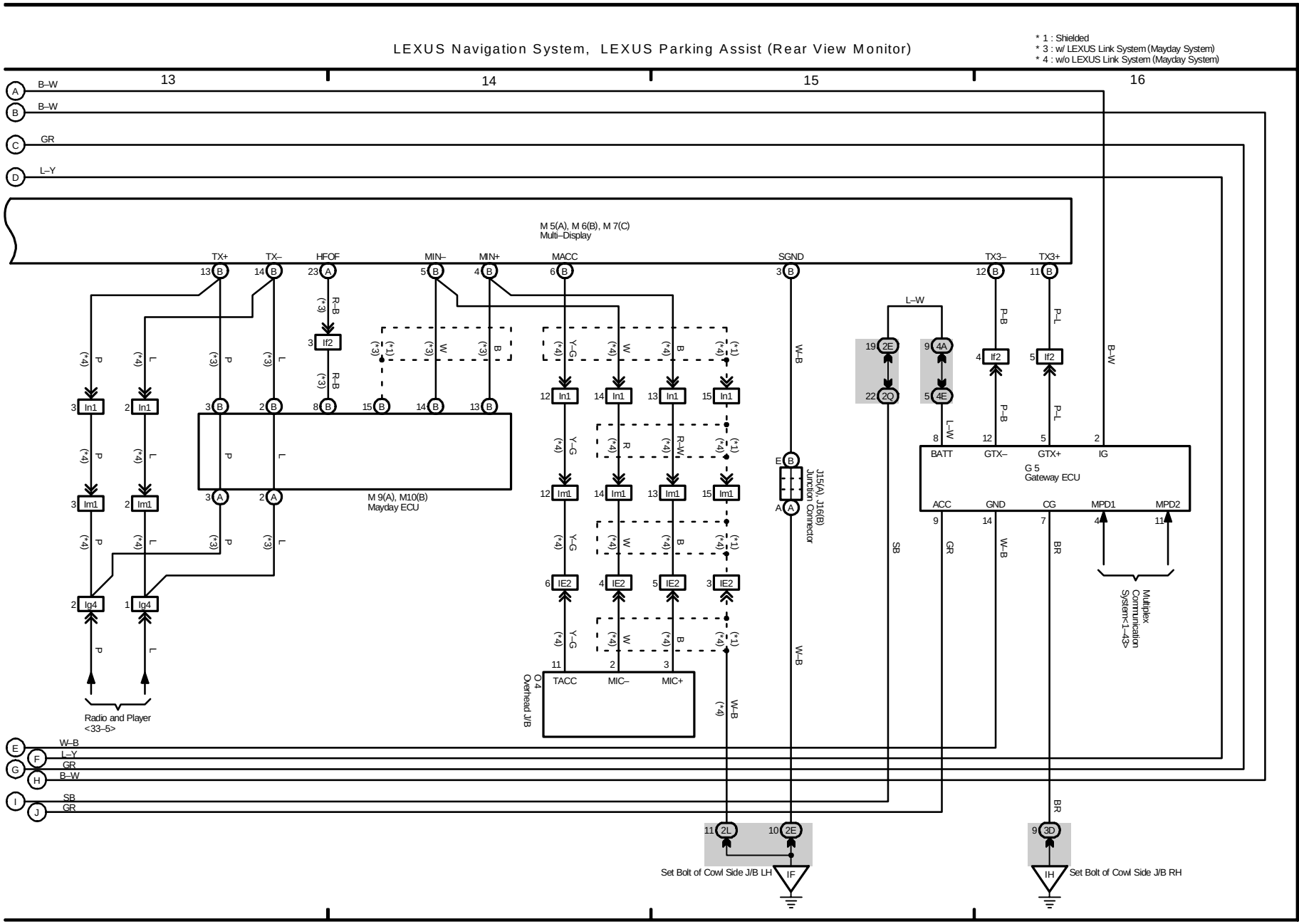
LEXUS Navigation System, LEXUS Parking Assist (Rear View Monitor)
* 1 : Shielded
* 3 : w/ LEXUS Link System (Mayday System)
* 4 : w/o LEXUS Link System (Mayday System)
13
14
15
16
M 5(A), M 6(B), M 7(C)
Multi–Display
TX+
TX–
HFOF
MIN–
MIN+
MACC
SGND
TX3–
TX3+
M 9(A), M10(B)
Mayday ECU
Radio and Player
<33–5>
O 4
Overhead J/B
TACC
MIC–
MIC+
J15(A), J16(B)
Junction Connector
G 5
Gateway ECU
BATT
GTX–
GTX+
IG
ACC
GND
CG
MPD1
MPD2
Multiplex
Communication
System<1–43>
Set Bolt of Cowl Side J/B LH
Set Bolt of Cowl Side J/B RH

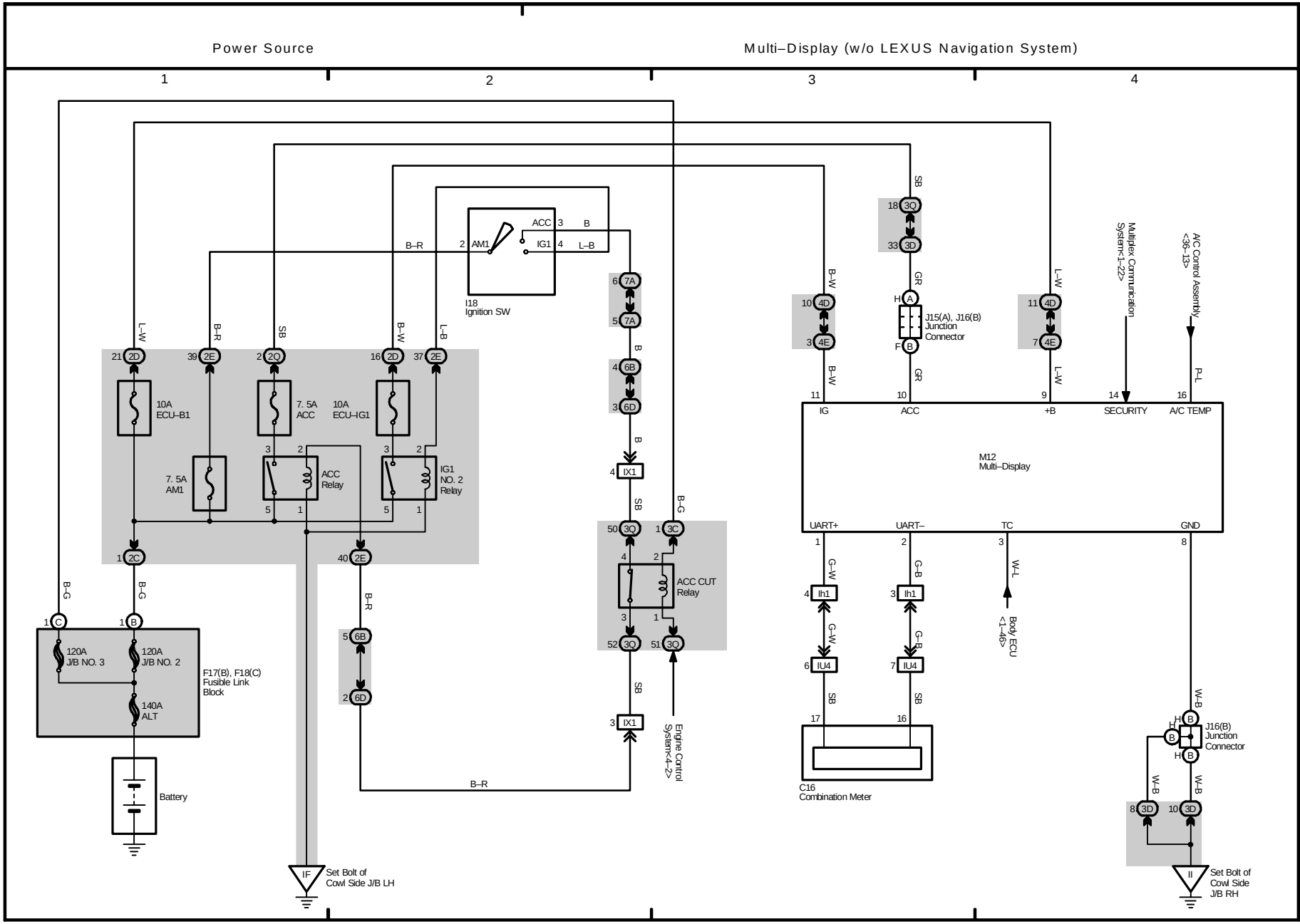
Power Source
Multi–Display (w/o LEXUS Navigation System)
1
2
3
4
I18
Ignition SW
ACC
IG1
AM1
10A
ECU–B1
7. 5A
ACC
10A
ECU–IG1
7. 5A
AM1
ACC
Relay
IG1
NO. 2
Relay
ACC CUT
Relay
120A
J/B NO. 3
120A
J/B NO. 2
140A
ALT
F17(B), F18(C)
Fusible Link
Block
Battery
Set Bolt of
Cowl Side J/B LH
Engine Control
System<4–2>
J15(A), J16(B)
Junction
Connector
M12
Multi–Display
IG
ACC
+B
SECURITY
A/C TEMP
UART+
UART–
TC
GND
Multiplex Communication
System<1–22>
A/C Control Assembly
<36–13>
Body ECU
<1–46>
C16
Combination Meter
J16(B)
Junction
Connector
Set Bolt of
Cowl Side
J/B RH

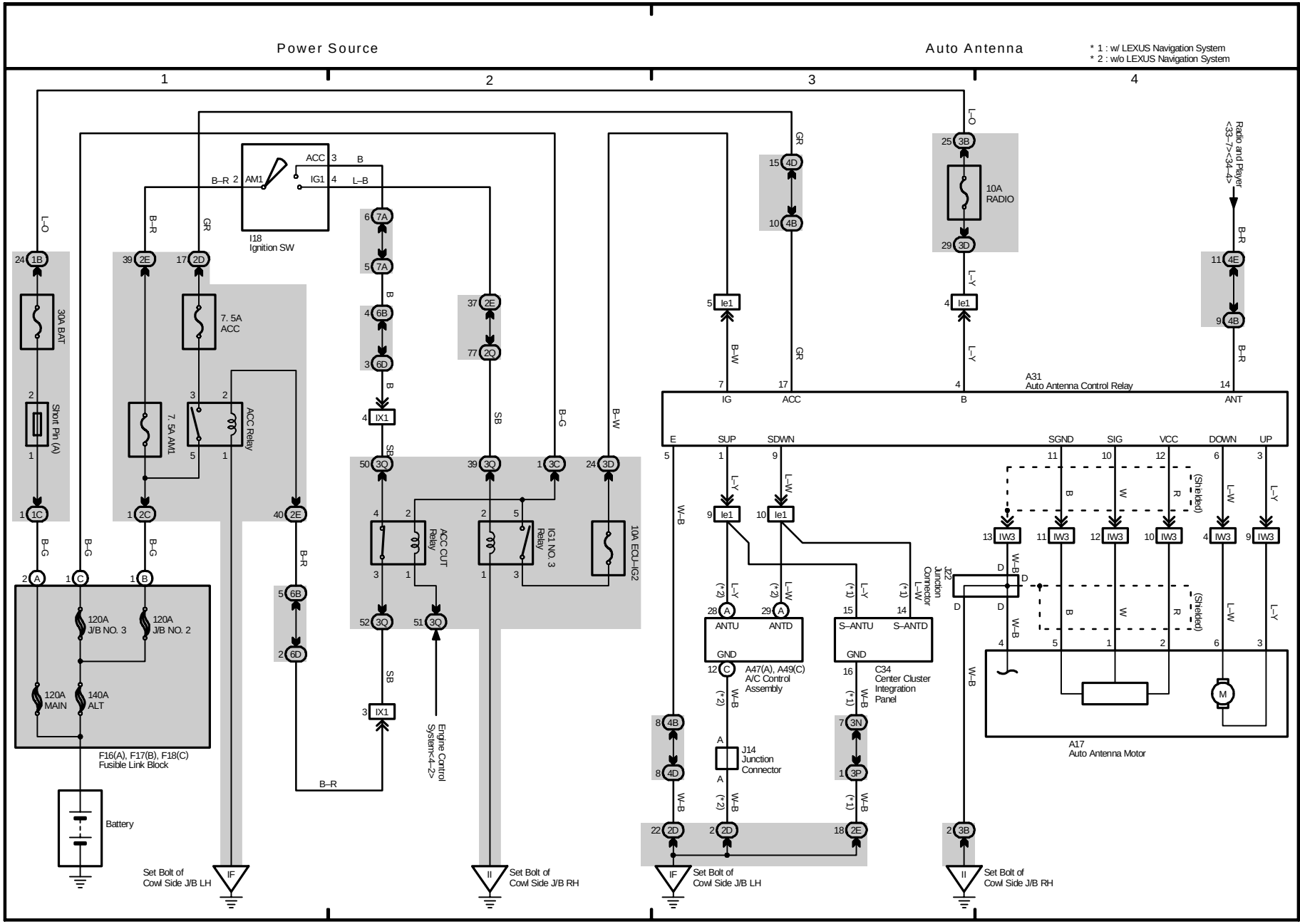
Power Source
Auto Antenna
* 1 : w/ LEXUS Navigation System
* 2 : w/o LEXUS Navigation System
1
2
3
4
I18
Ignition SW
ACC
IG1
AM1
30A BAT
Short Pin (A)
7. 5A
ACC
7. 5A AM1
ACC Relay
ACC CUT Relay
IG1 NO. 3 Relay
10A ECU–IG2
10A
RADIO
Radio and Player
<33–7><34–4>
A31
Auto Antenna Control Relay
IG
ACC
B
ANT
E
SUP
SDWN
SGND
SIG
VCC
DOWN
UP
ANTU
ANTD
GND
A47(A), A49(C)
A/C Control
Assembly
S–ANTU
S–ANTD
C34
Center Cluster
Integration
Panel
J14
Junction
Connector
J22
Junction
Connector
(Shielded)
A17
Auto Antenna Motor
120A
J/B NO. 3
120A
J/B NO. 2
120A
MAIN
140A
ALT
F16(A), F17(B), F18(C)
Fusible Link Block
Battery
Engine Control
System<4–2>
Set Bolt of
Cowl Side J/B LH
Set Bolt of
Cowl Side J/B RH

(Cont. next page)

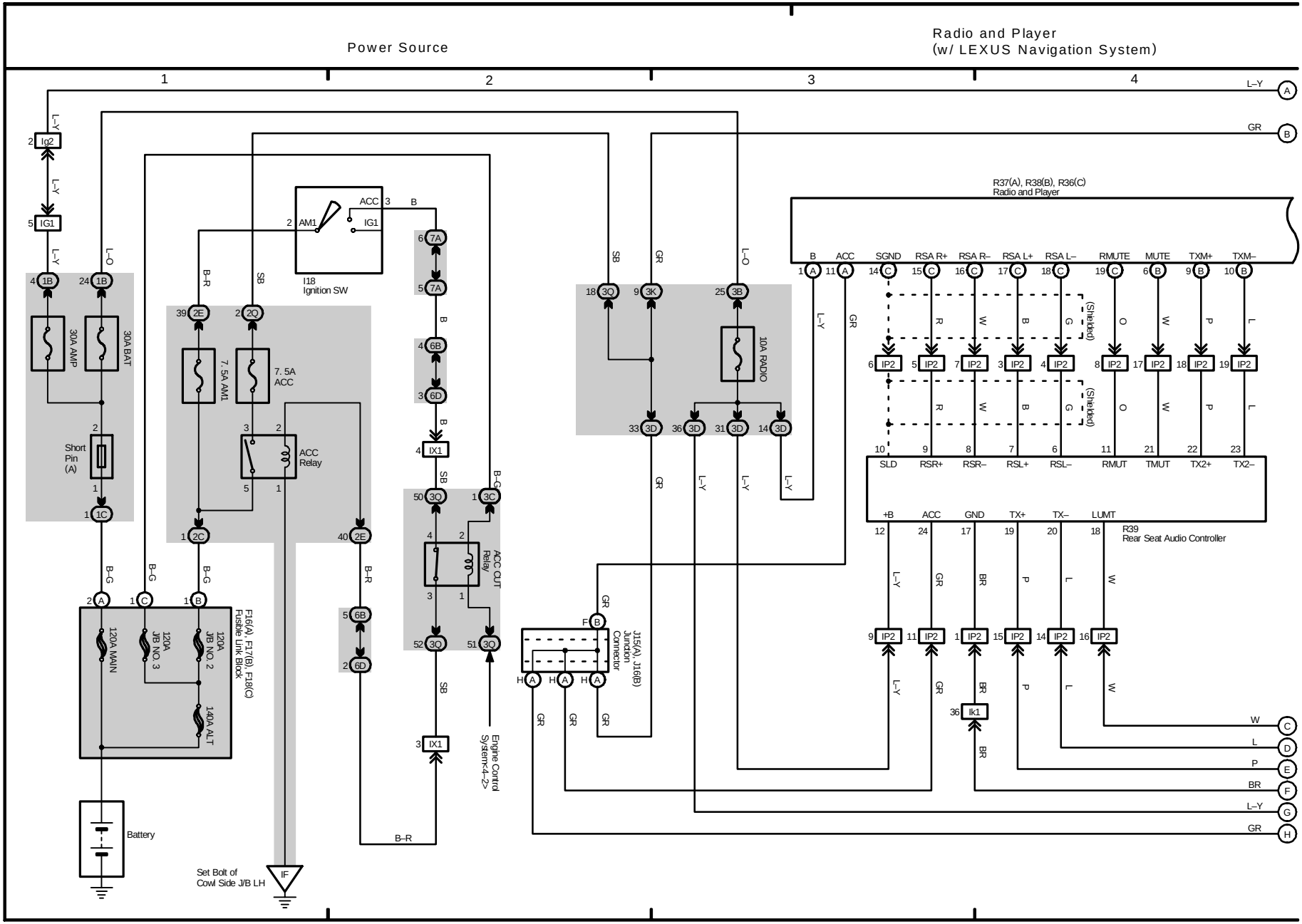

(Cont. next page)

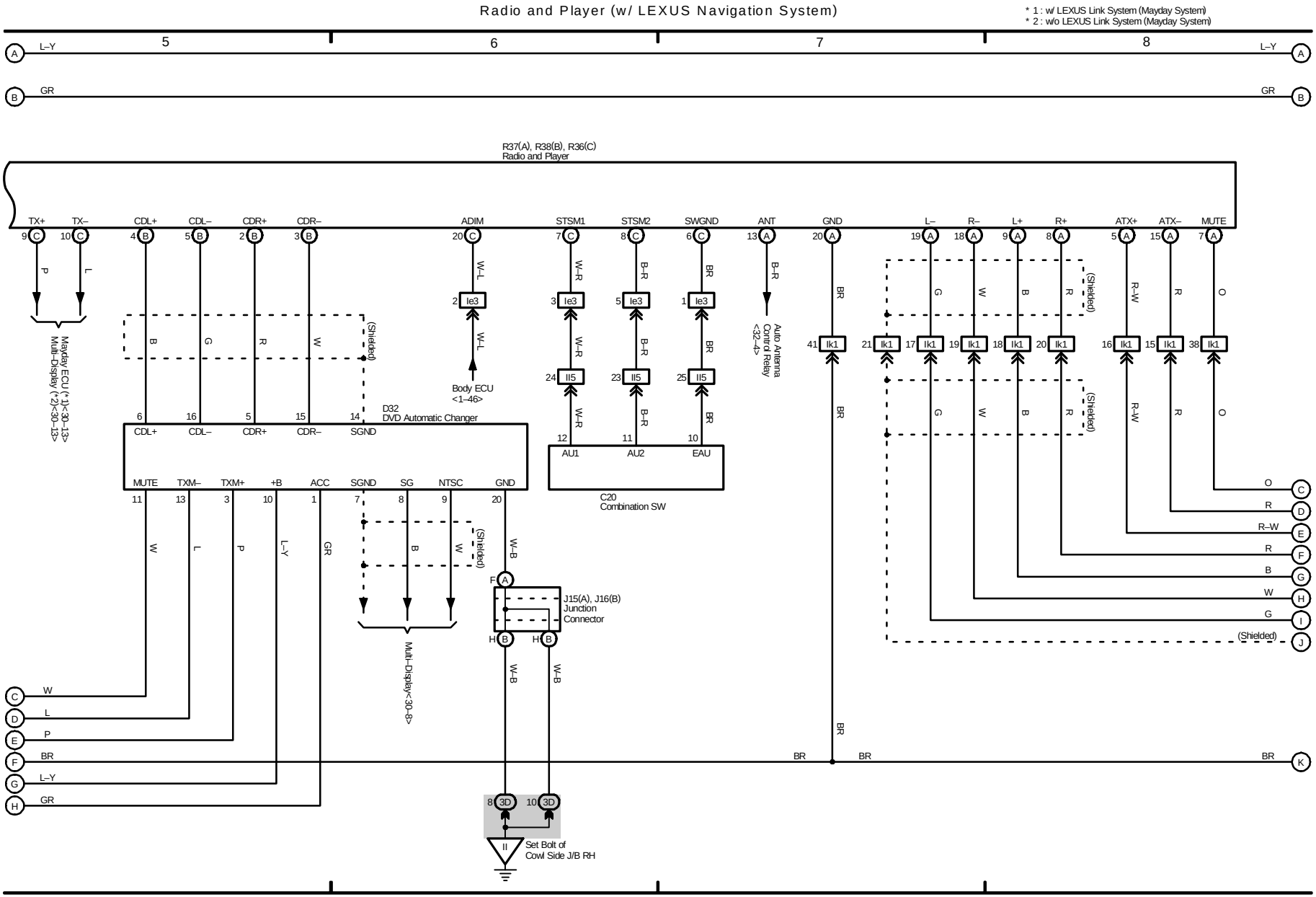

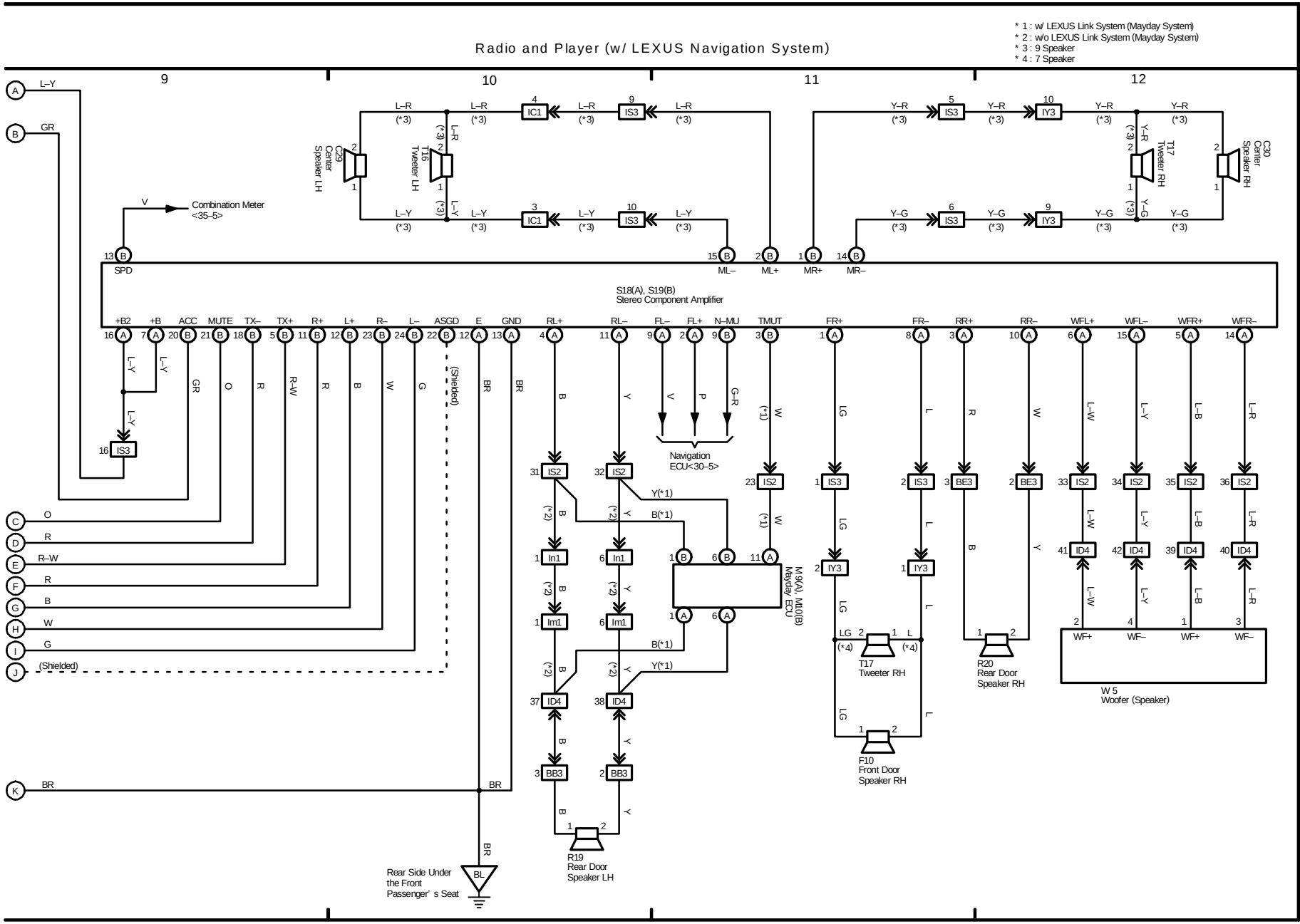
Radio and Player (w/ LEXUS Navigation System)
* 1 : w/ LEXUS Link System (Mayday System)
* 2 : w/o LEXUS Link System (Mayday System)
* 3 : 9 Speaker
* 4 : 7 Speaker
9
10
11
12
Combination Meter <35–5>
C29 Center Speaker LH
T16 Tweeter LH
T17 Tweeter RH
C30 Center Speaker RH
S18(A), S19(B) Stereo Component Amplifier
+B2 +B ACC MUTE TX– TX+ R+ L+ R– L– ASGD E GND RL+ RL– FL– FL+ N–MU TMUT FR+ FR– RR+ RR– WFL+ WFL– WFR+ WFR–
SPD
ML– ML+ MR+ MR–
Navigation ECU<30–5>
M9(A) M10(B) Mayday ECU
T17 Tweeter RH
R20 Rear Door Speaker RH
W 5 Woofer (Speaker)
F10 Front Door Speaker RH
R19 Rear Door Speaker LH
Rear Side Under the Front Passenger' s Seat
(Shielded)

M OVERALL ELECTRICAL WIRING DIAGRAM

(Cont. next page)

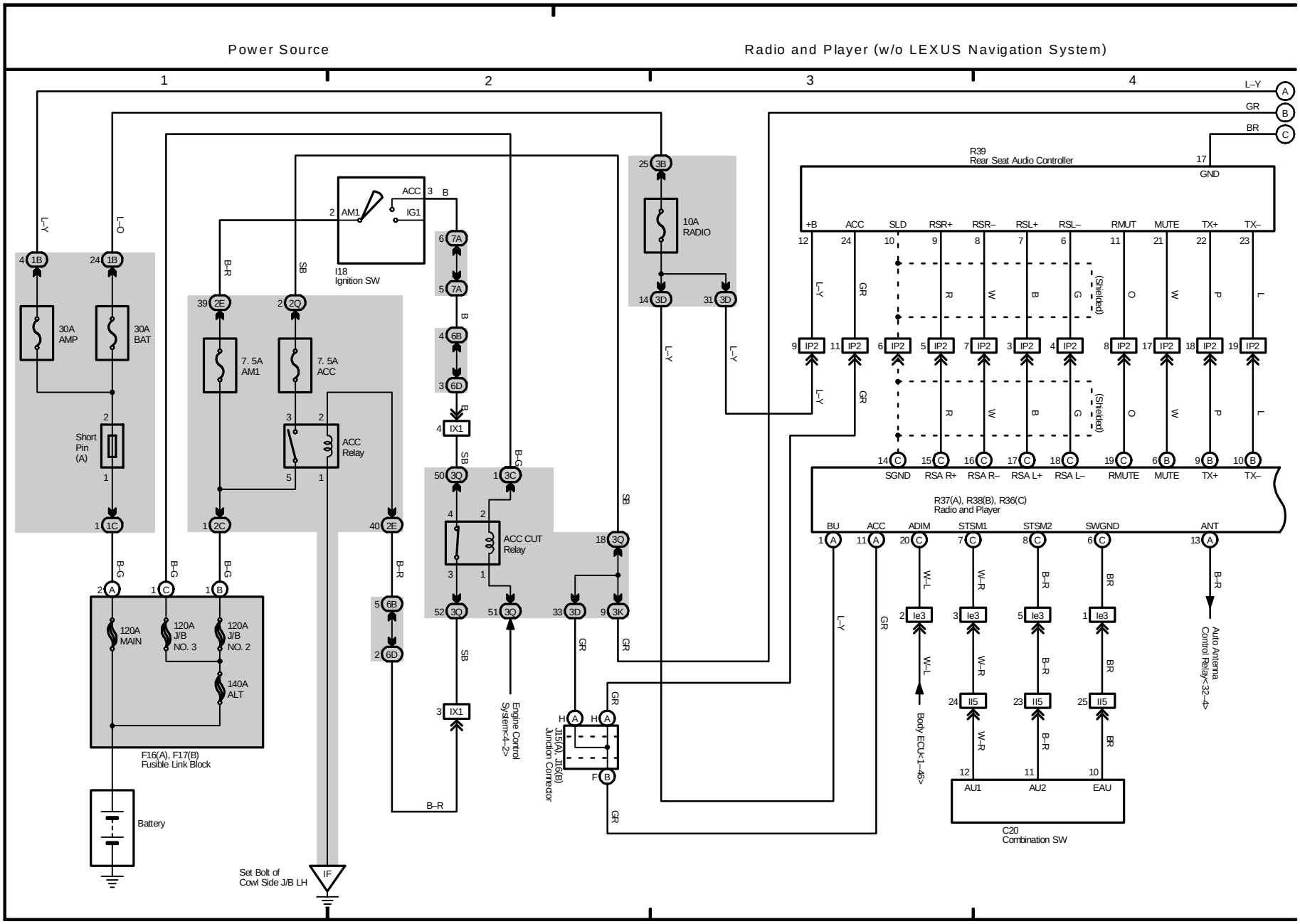

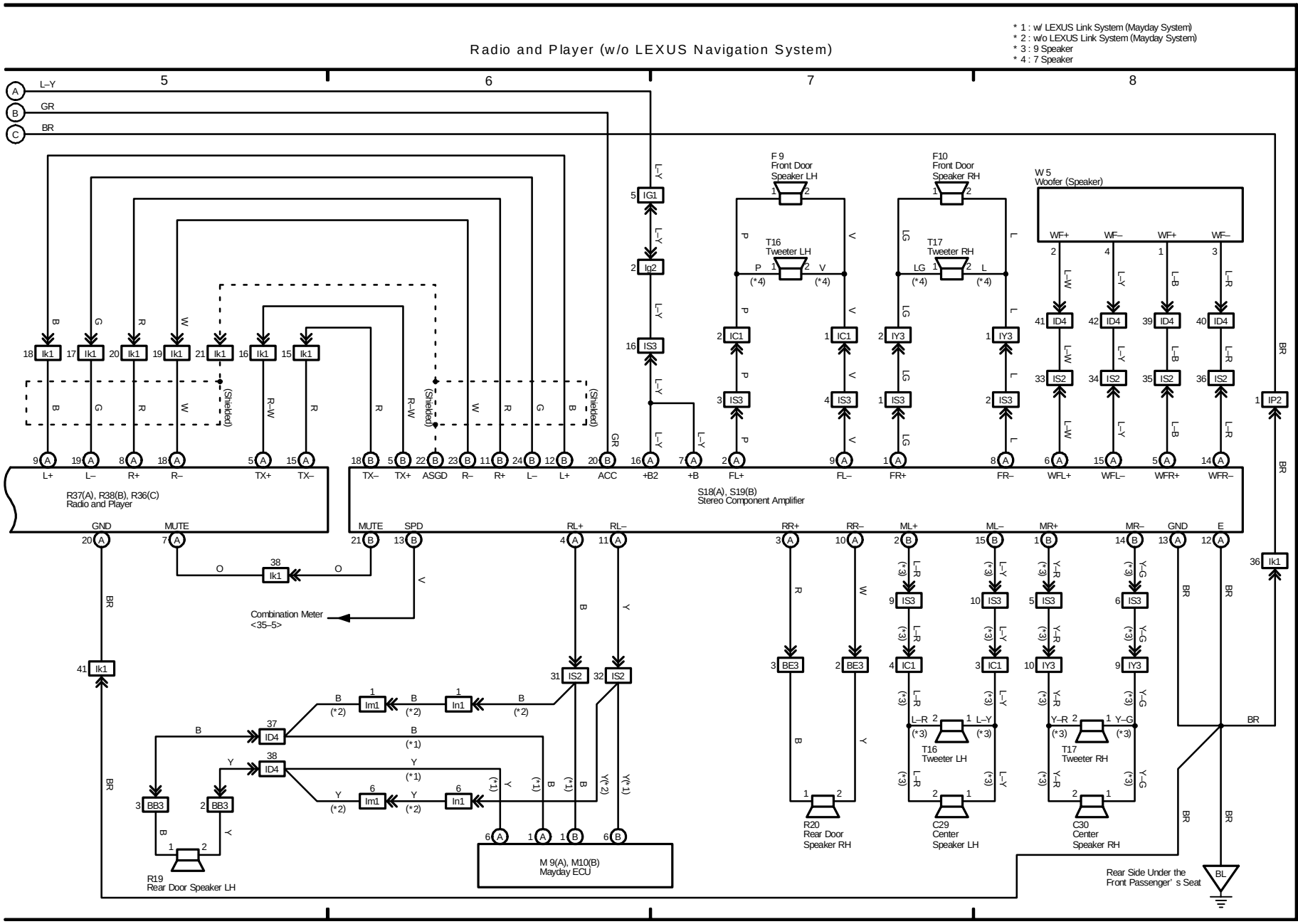
Radio and Player (w/o LEXUS Navigation System)
* 1 : w/ LEXUS Link System (Mayday System)
* 2 : w/o LEXUS Link System (Mayday System)
* 3 : 9 Speaker
* 4 : 7 Speaker
5
6
7
8
R37(A), R38(B), R36(C)
Radio and Player
S18(A), S19(B)
Stereo Component Amplifier
F 9
Front Door
Speaker LH
F10
Front Door
Speaker RH
W 5
Woofer (Speaker)
T16
Tweeter LH
T17
Tweeter RH
Combination Meter
<35–5>
M 9(A), M10(B)
Mayday ECU
R19
Rear Door Speaker LH
R20
Rear Door
Speaker RH
C29
Center
Speaker LH
C30
Center
Speaker RH
Rear Side Under the
Front Passenger' s Seat
(Shielded)

M OVERALL ELECTRICAL WIRING DIAGRAM

(Cont. next page)

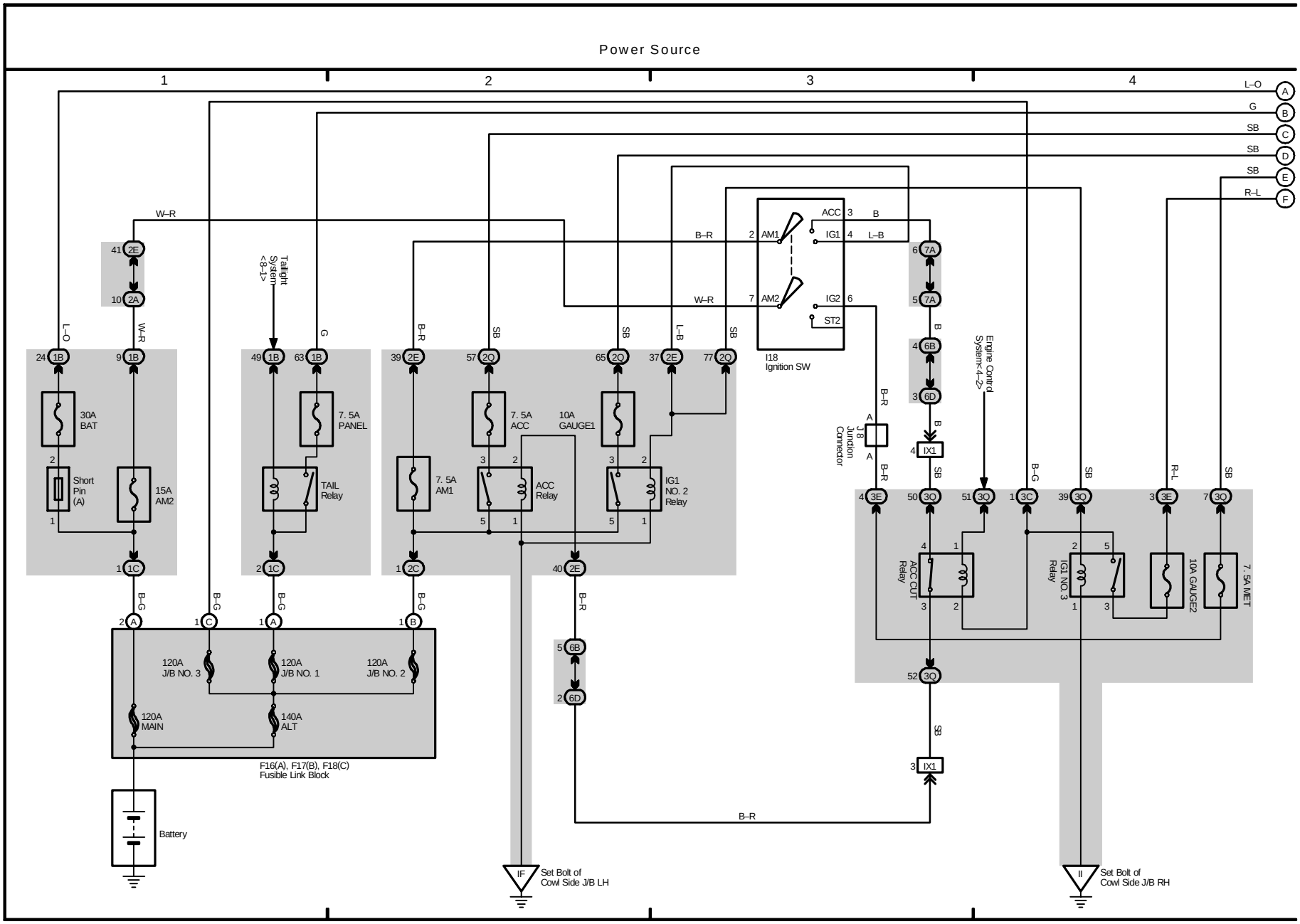

(Cont. next page)

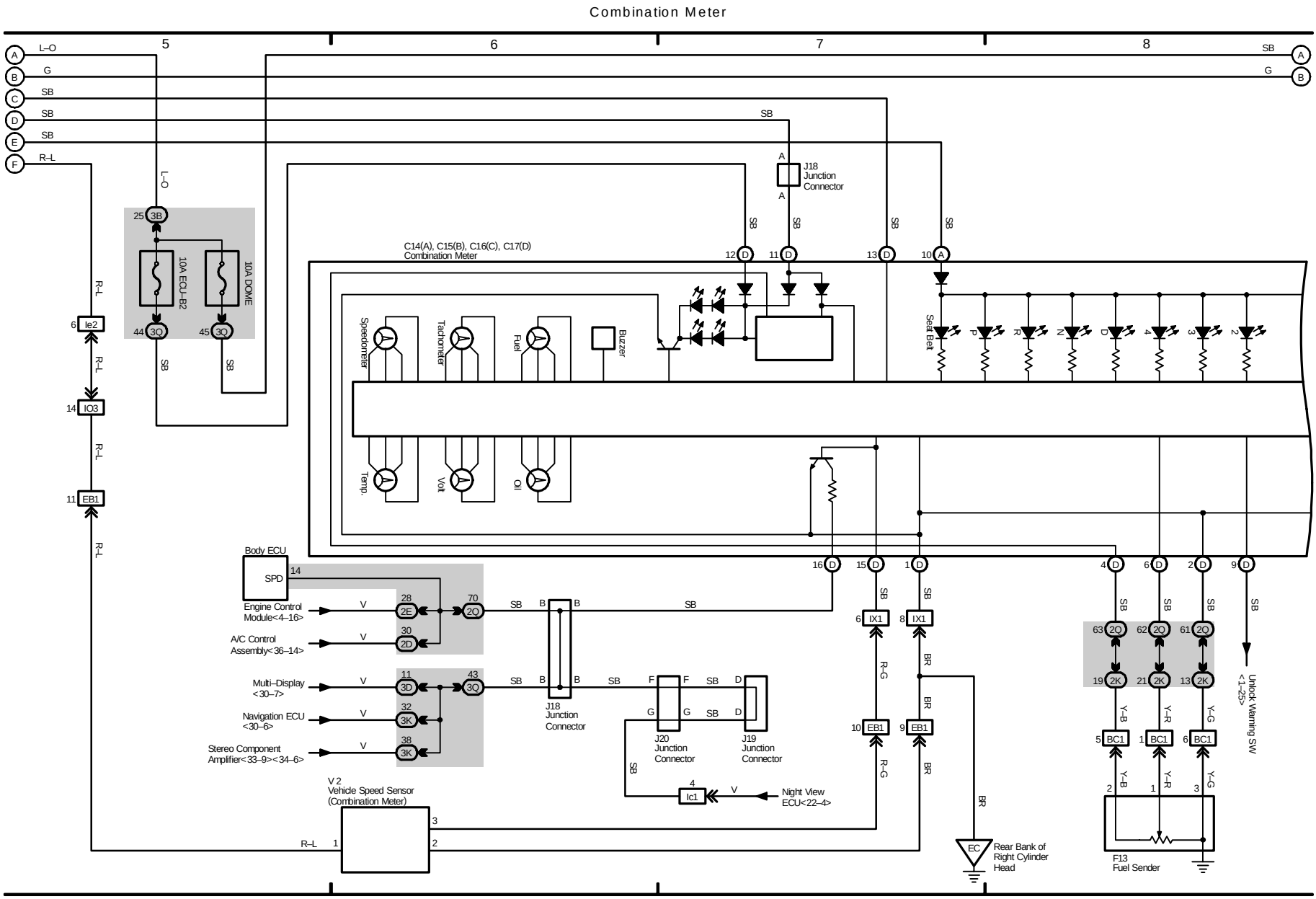

M OVERALL ELECTRICAL WIRING DIAGRAM

(Cont. next page)

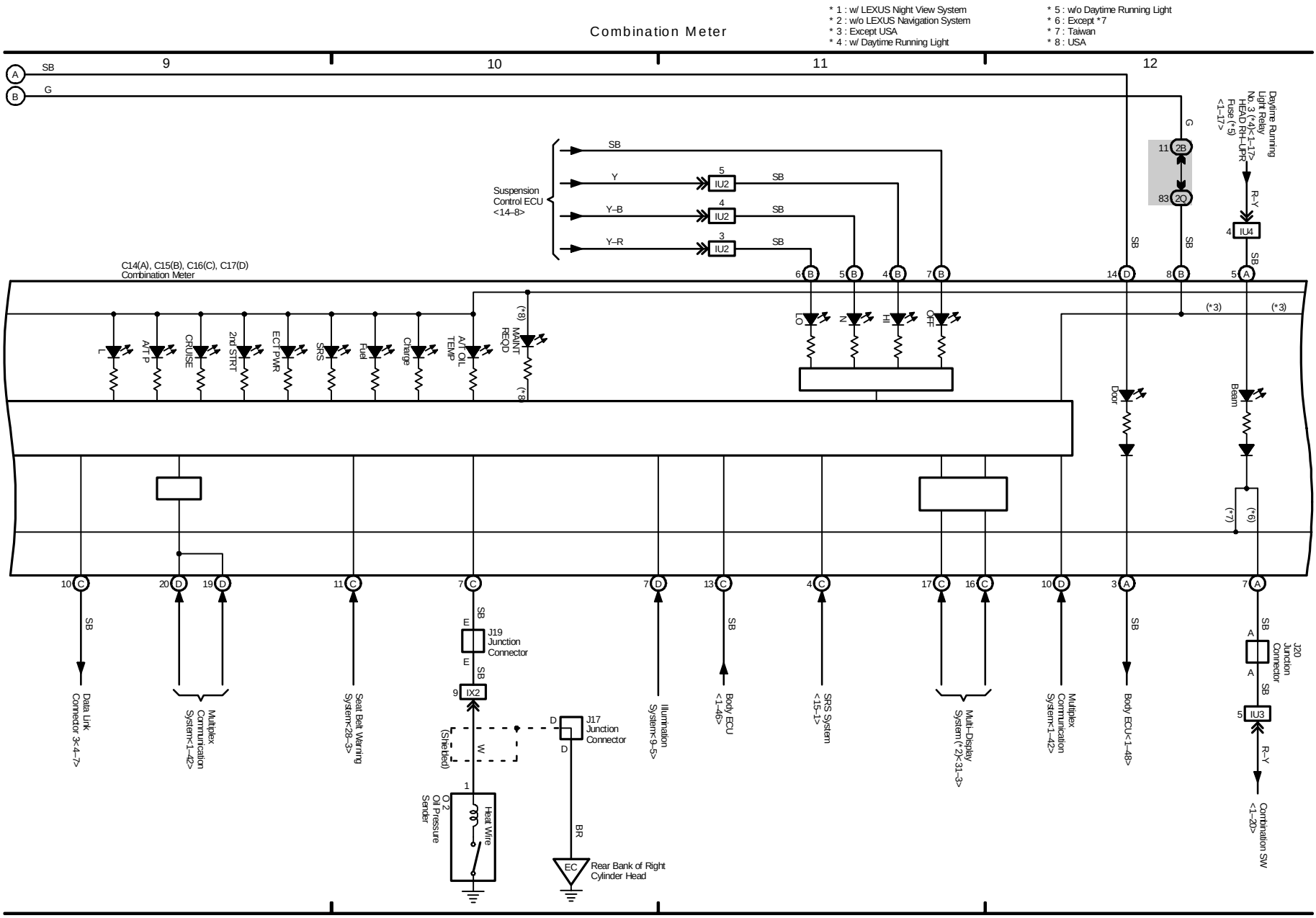

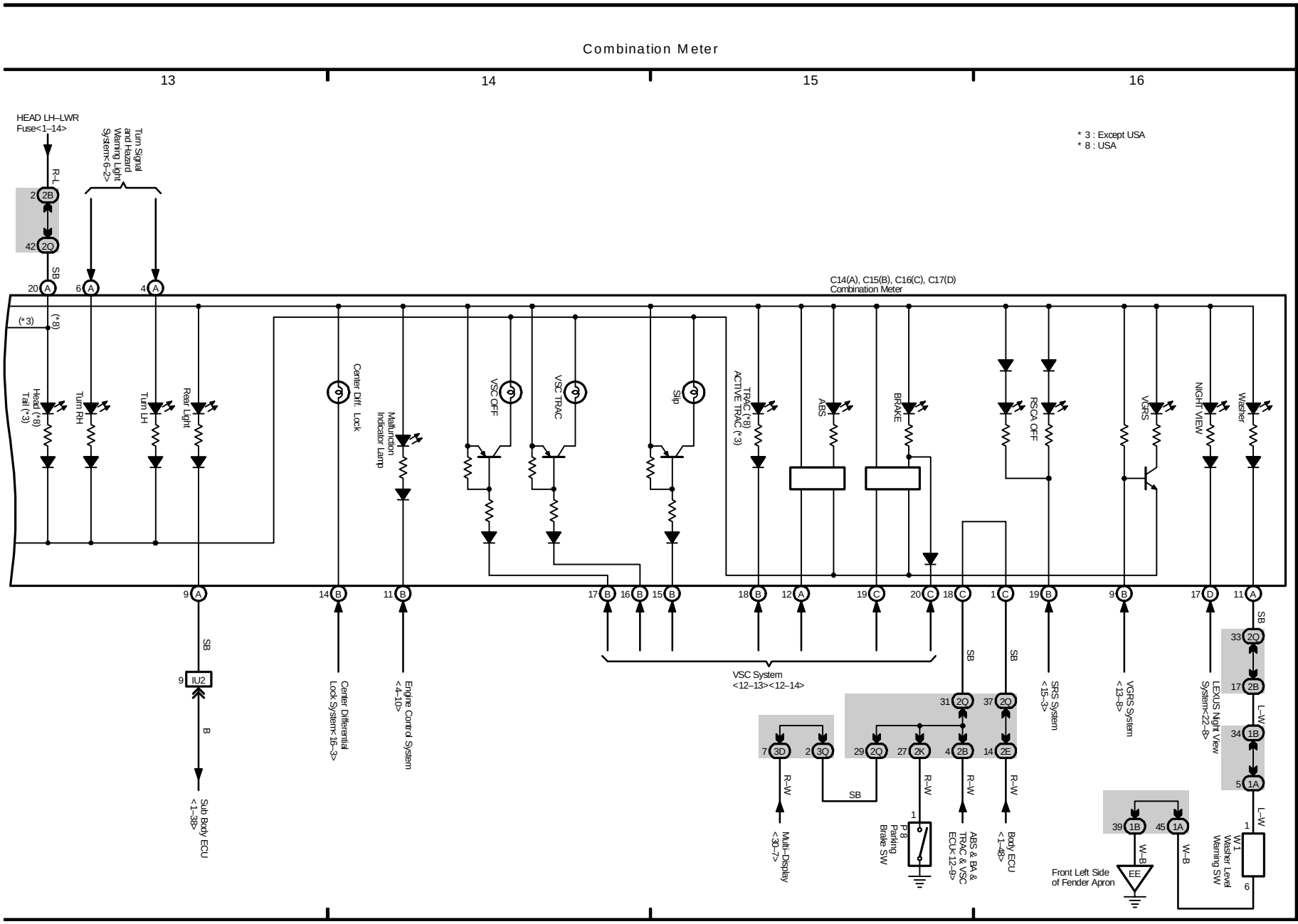
Combination Meter
13
14
15
16
HEAD LH–LWR
Fuse<1–14>
Turn Signal and Hazard Warning Light System<6–2>
* 3 : Except USA
* 8 : USA
C14(A), C15(B), C16(C), C17(D)
Combination Meter
Head (*8)
Tail (*3)
Turn RH
Turn LH
Rear Light
Center Diff. Lock
Malfunction Indicator Lamp
VSC OFF
VSC TRAC
Slip
TRAC (*8)
ACTIVE TRAC (*3)
ABS
BRAKE
RSCA OFF
VGRS
NIGHT VIEW
Washer
VSC System
<12–13><12–14>
Sub Body ECU
<1–38>
Center Differential Lock System<16–3>
Engine Control System
<4–10>
Multi–Display
<30–7>
P & Parking Brake SW
ABS & BA & TRAC & VSC ECU<12–9>
Body ECU
<1–48>
SRS System
<15–3>
VGRS System
<13–8>
LEXUS Night View System<22–8>
Washer Level Warning SW
Front Left Side of Fender Apron

M OVERALL ELECTRICAL WIRING DIAGRAM

(Cont. next page)

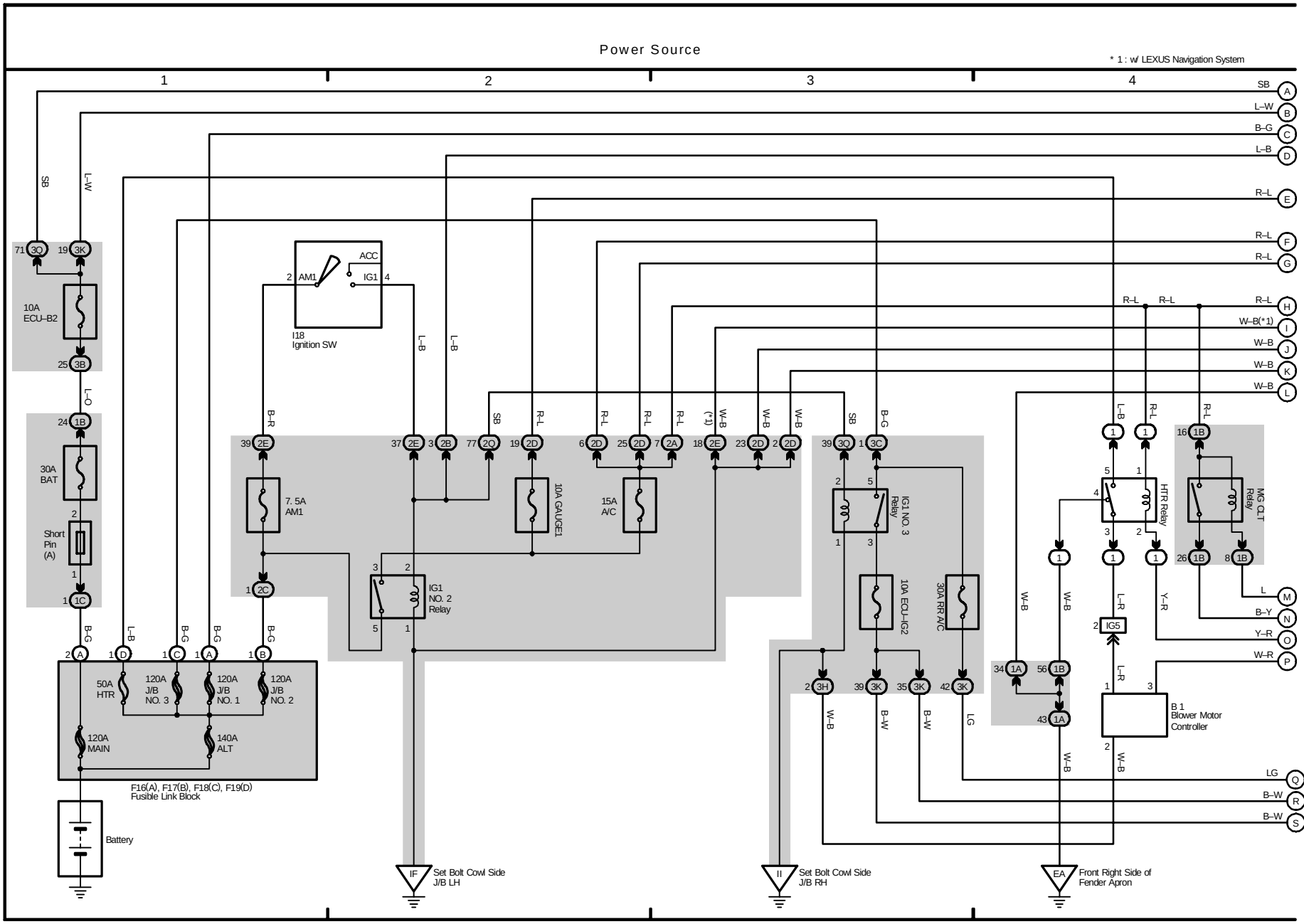

(Cont. next page)

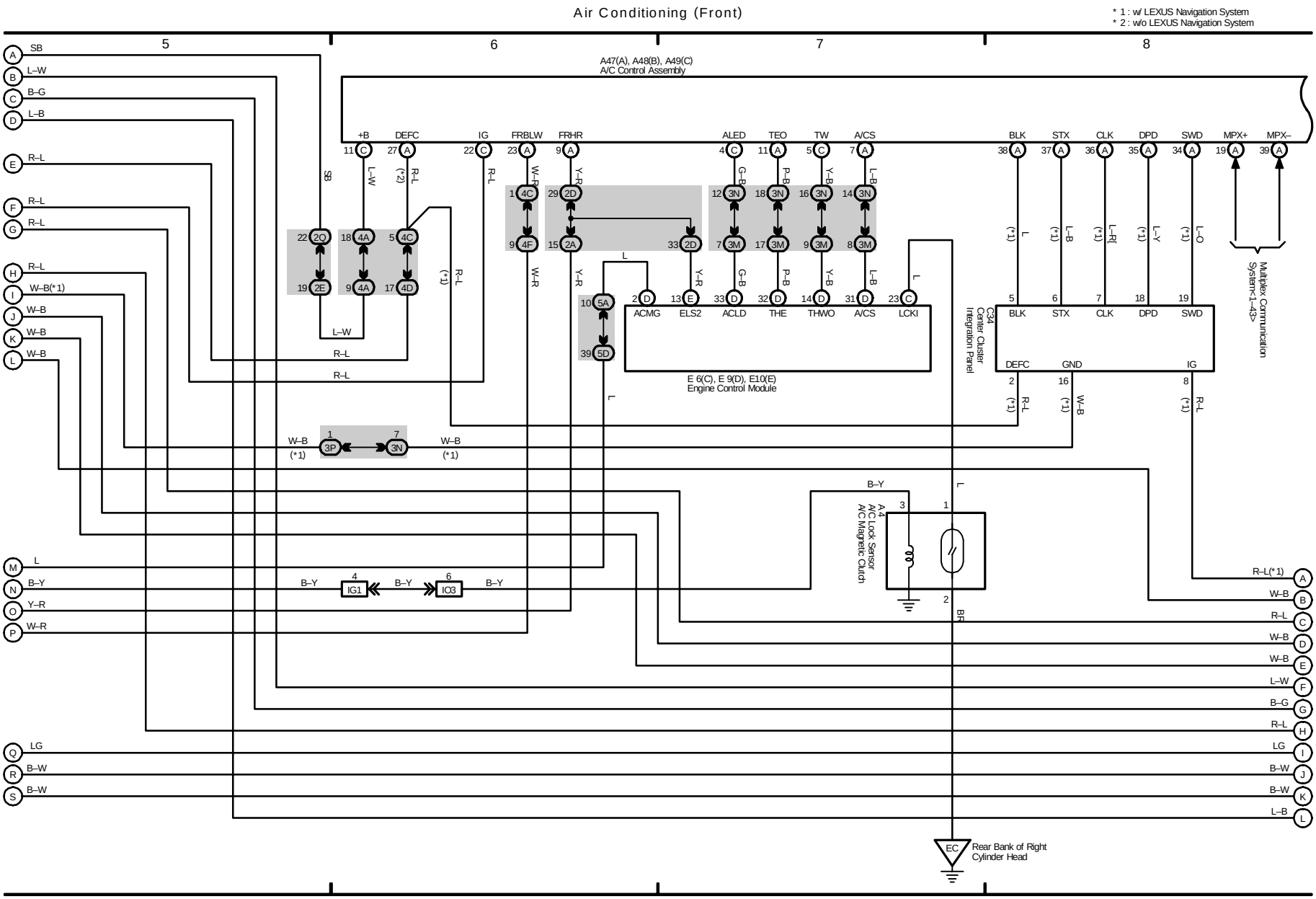

M OVERALL ELECTRICAL WIRING DIAGRAM

(Cont. next page)

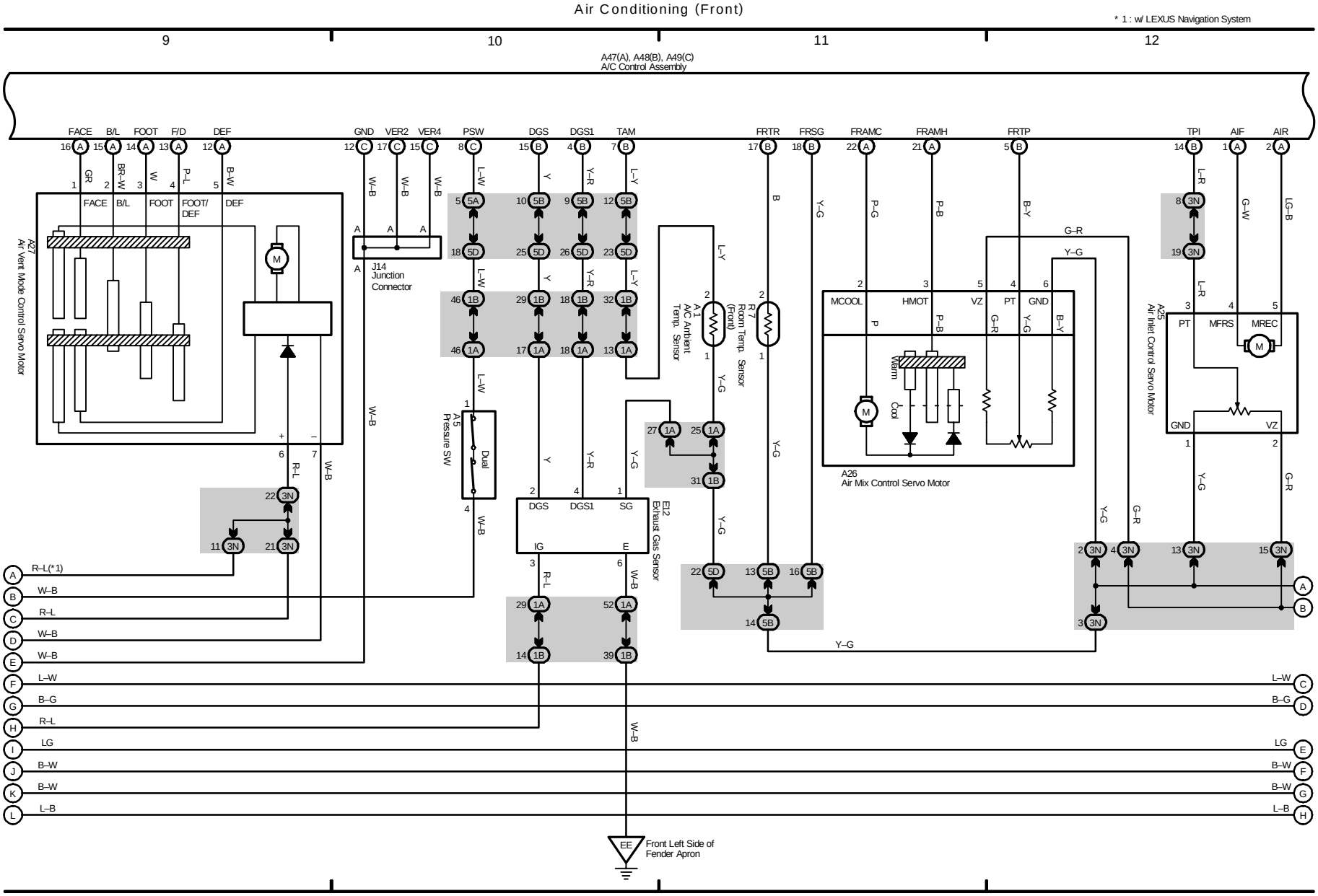

(Cont. next page)

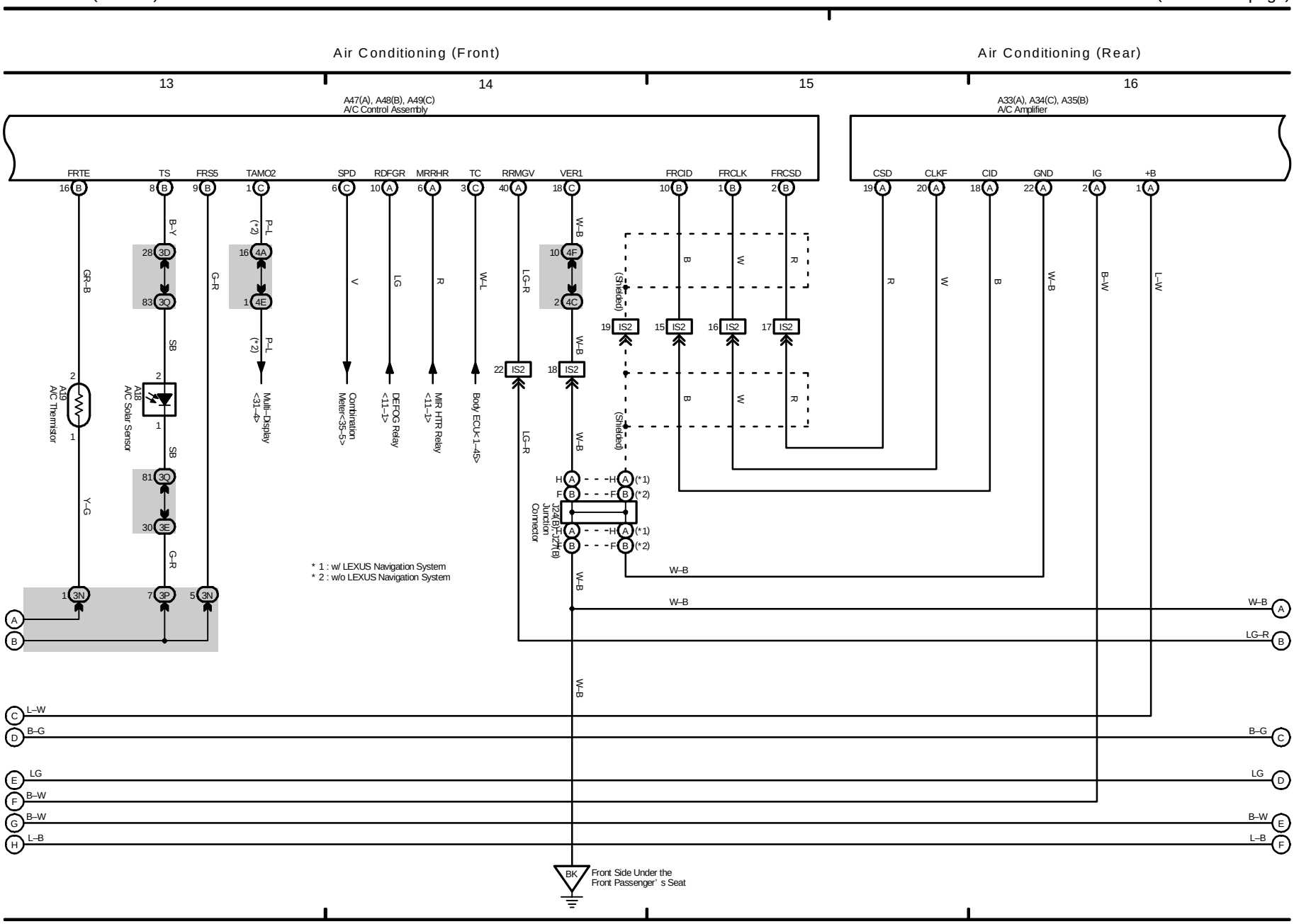

M OVERALL ELECTRICAL WIRING DIAGRAM

(Cont. next page)

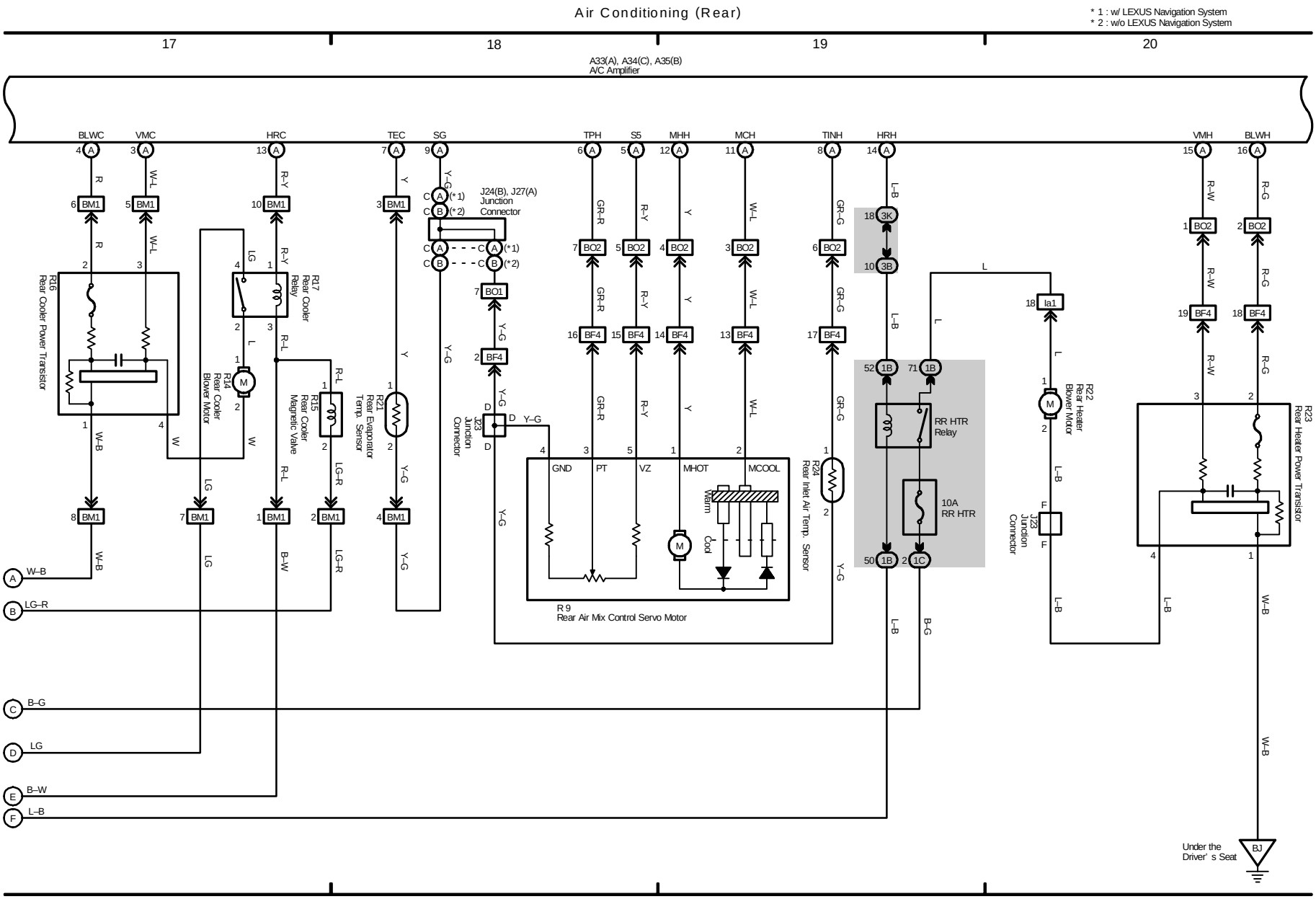

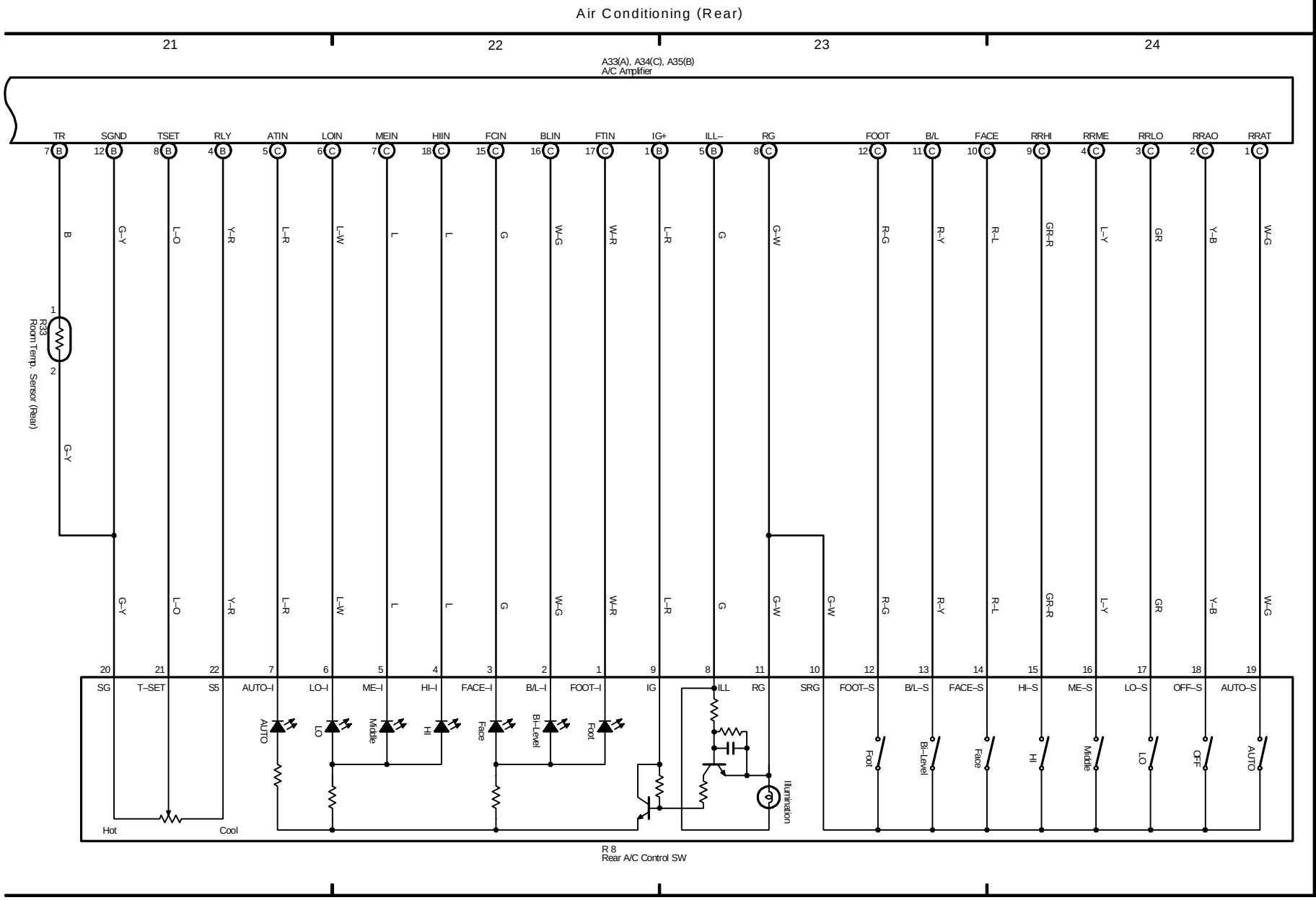
Air Conditioning (Rear)
21
22
23
24
A33(A), A34(C), A35(B)
A/C Amplifier
TR
SGND
TSET
RLY
ATIN
LOIN
MEIN
HIIN
FCIN
BLIN
FTIN
IG+
ILL–
RG
FOOT
B/L
FACE
RRHI
RRME
RRLO
RRAO
RRAT
R33
Room Temp. Sensor (Rear)
SG
T–SET
S5
AUTO–I
LO–I
ME–I
HI–I
FACE–I
B/L–I
FOOT–I
IG
ILL
RG
SRG
FOOT–S
B/L–S
FACE–S
HI–S
ME–S
LO–S
OFF–S
AUTO–S
AUTO
LO
Middle
HI
Face
Bi–Level
Foot
Illumination
Hot
Cool
R 8
Rear A/C Control SW