HEADLIGHT AND TAILLIGHT SYSTEM

BE0SM–03
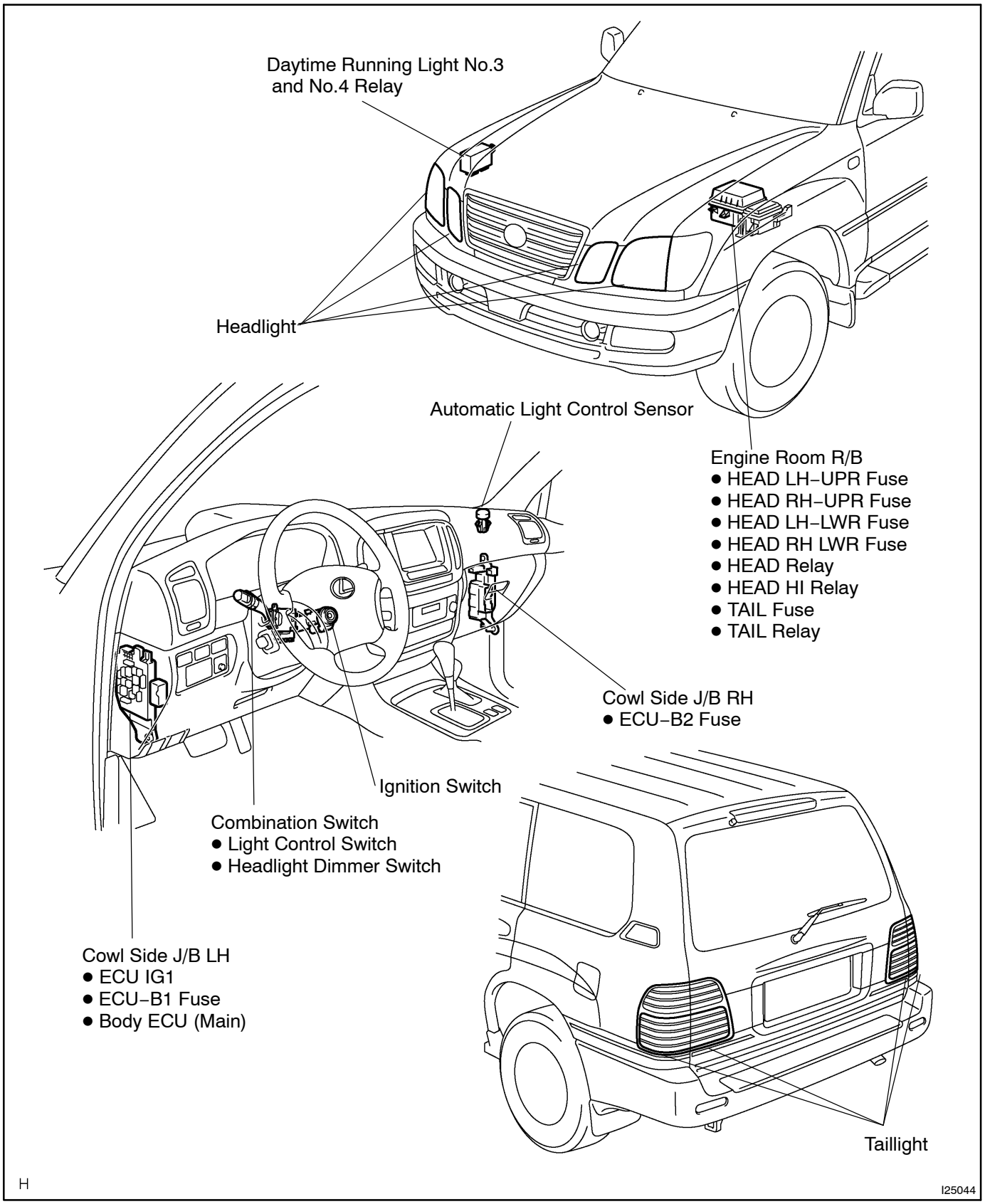
LOCATION