35 LX 470

(Cont. next page)

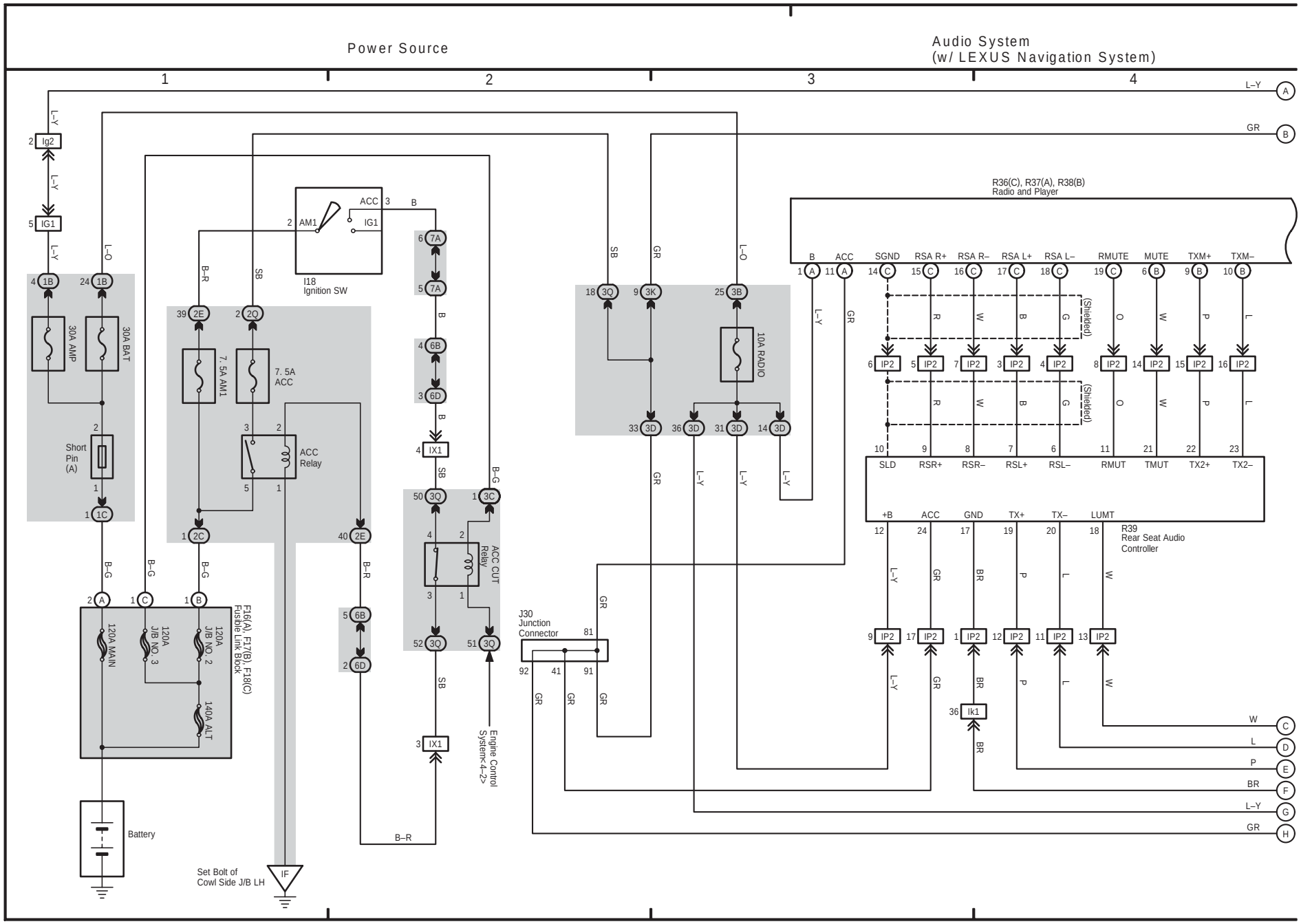

(Cont. next page)

Audio System (w/ LEXUS Navigation System)

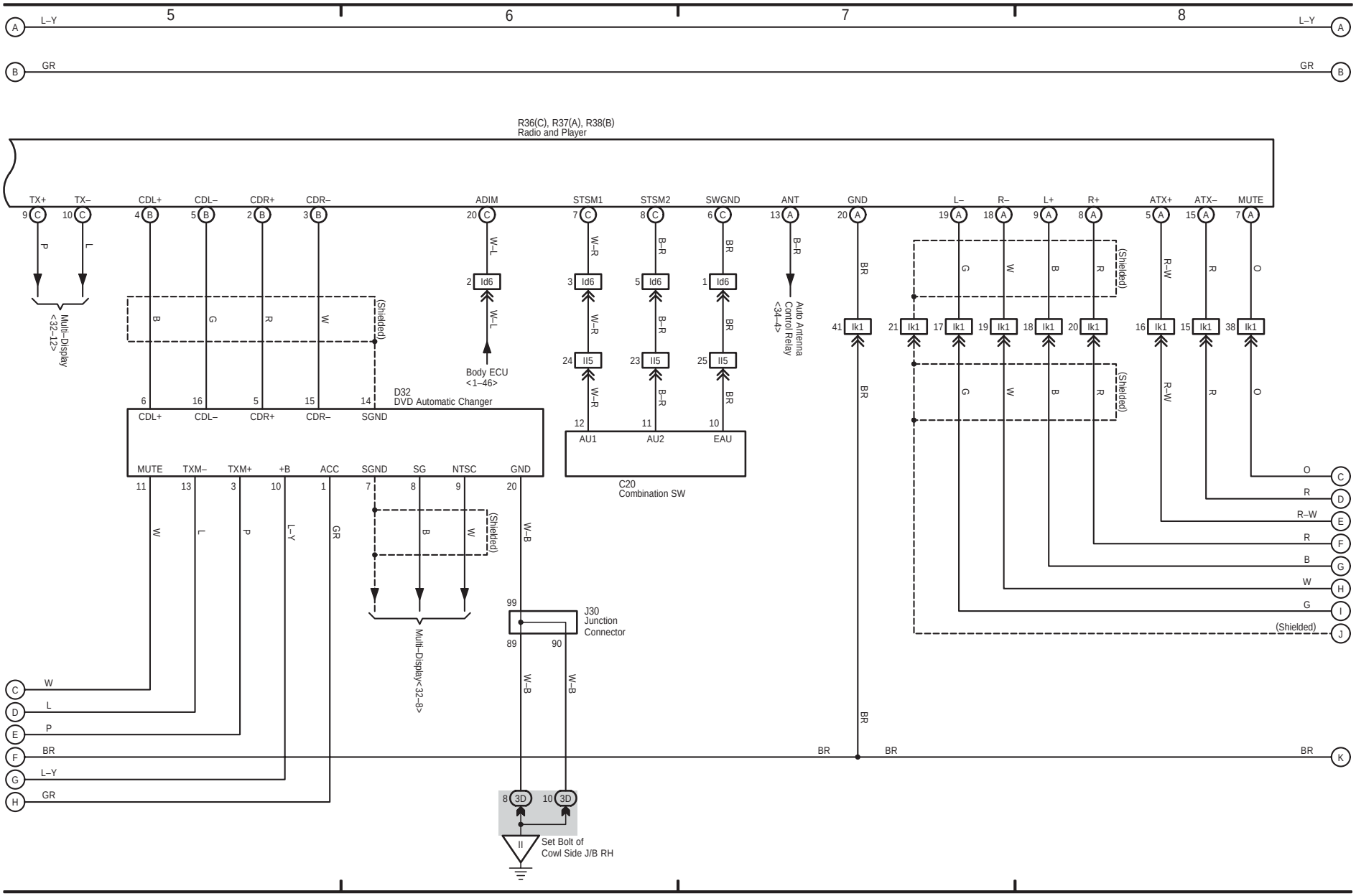
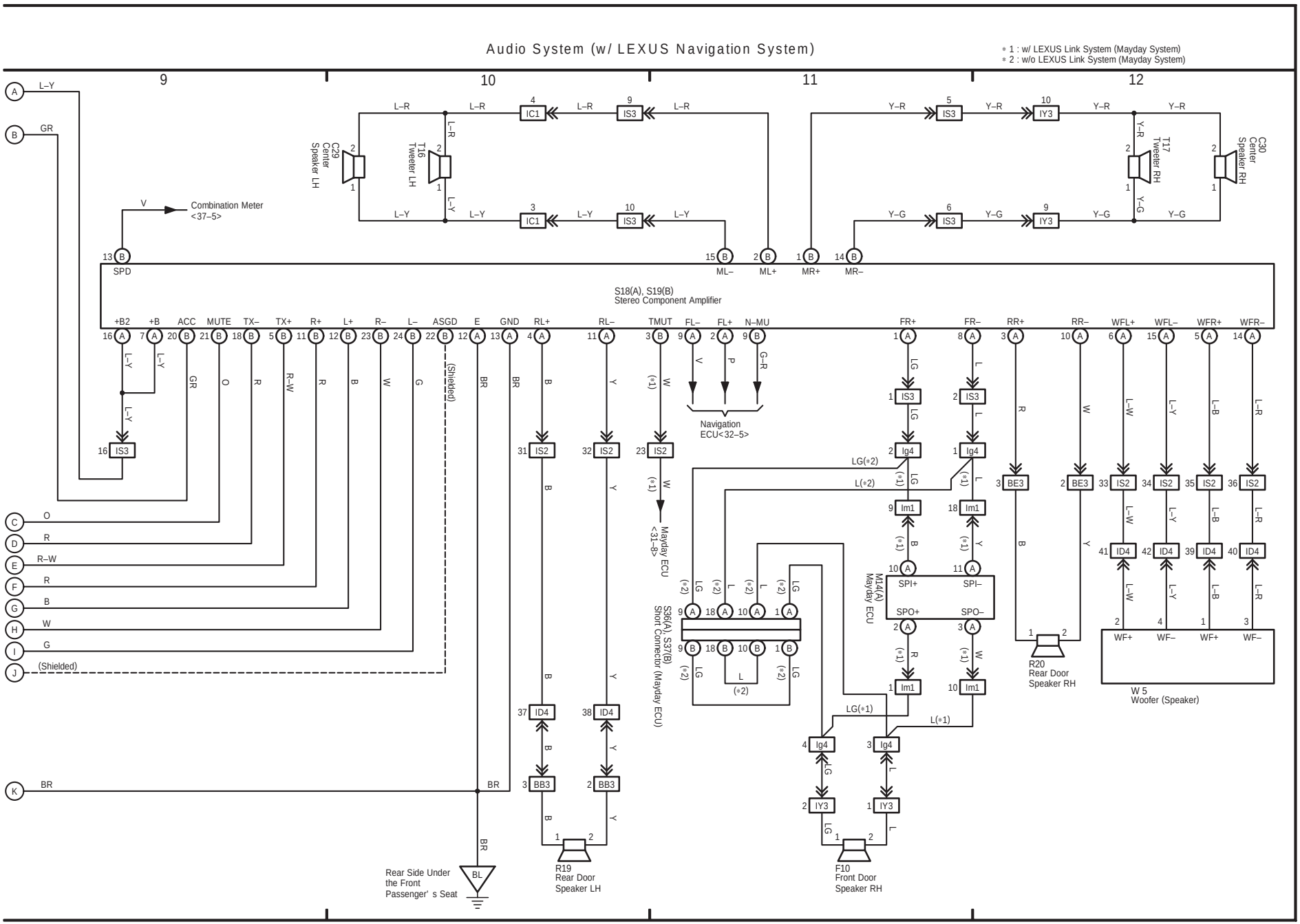
35 LX 470 (Cont' d)