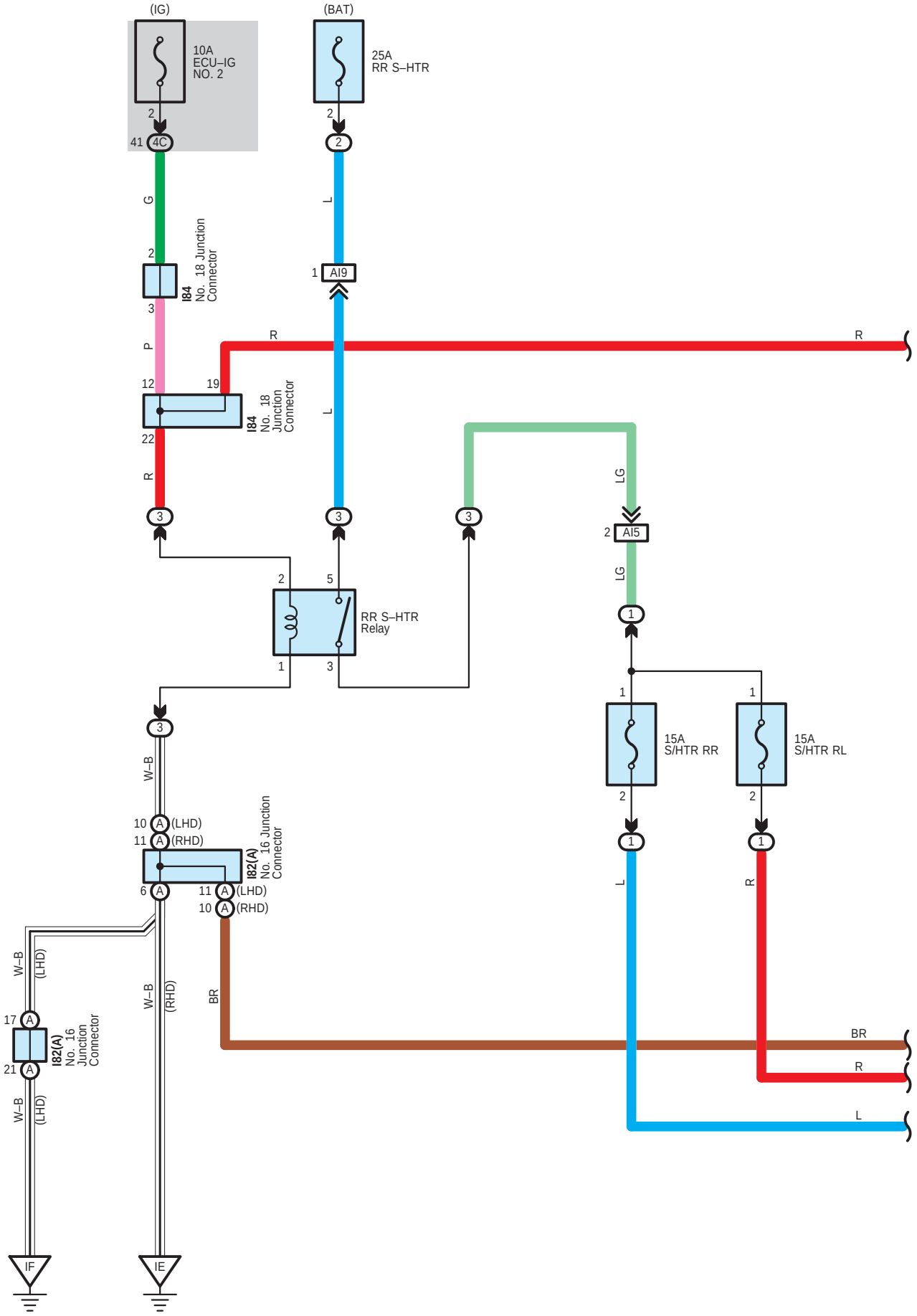
(IG)
10A
ECU–IG
NO. 2
(BAT)
25A
RR S–HTR
41 4C
G
L
I84
No. 18 Junction
Connector
AI9
P
R
12
19
22
I84
No. 18
Junction
Connector
LG
AI5
RR S–HTR
Relay
15A
S/HTR RR
15A
S/HTR RL
W–B
10 (LHD)
11 (RHD)
I82(A)
No. 16 Junction
Connector
6
11 (LHD)
10 (RHD)
BR
17
21
I82(A)
No. 16
Junction
Connector
IF
IE

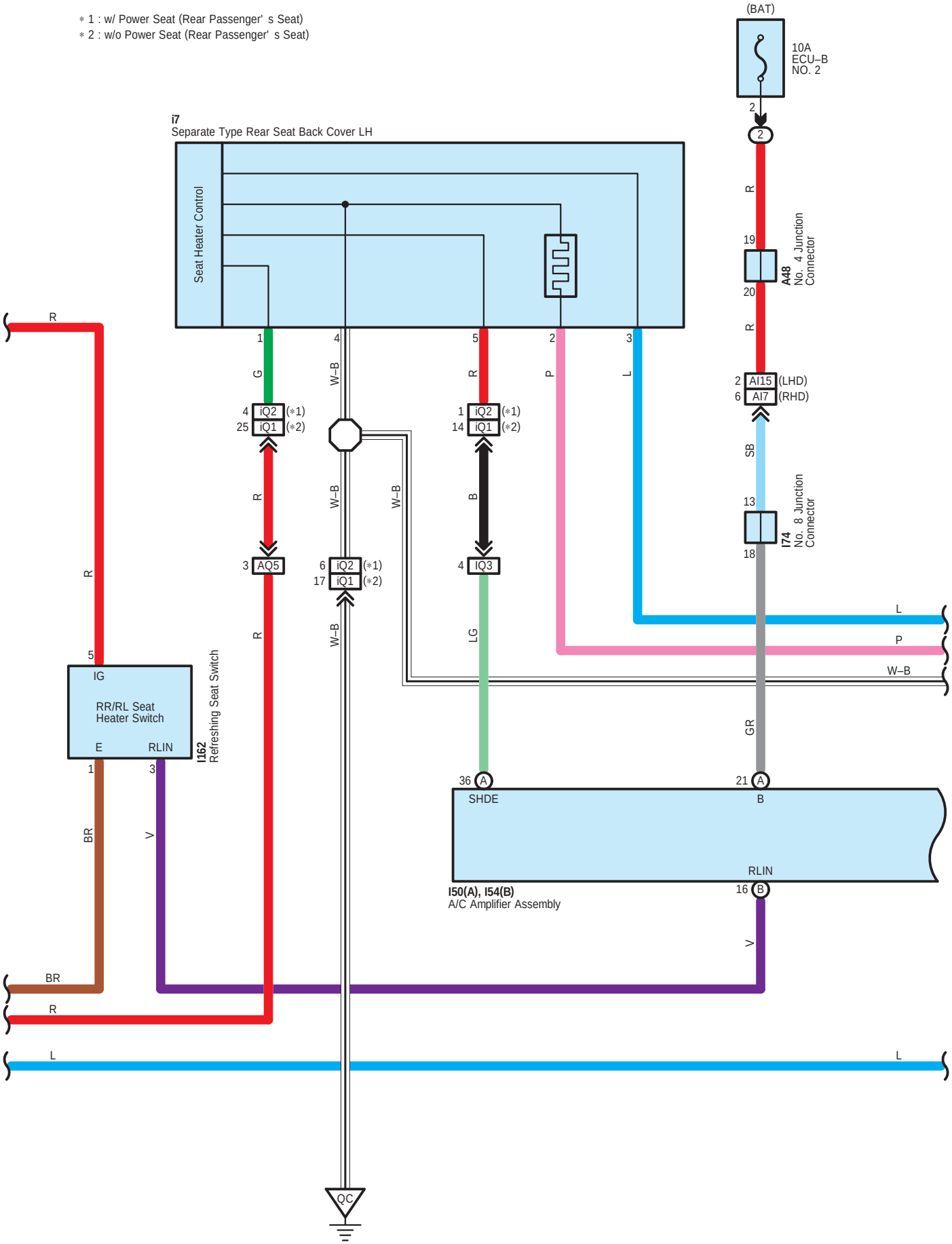
∗ 1 : w/ Power Seat (Rear Passenger' s Seat)
∗ 2 : w/o Power Seat (Rear Passenger' s Seat)
(BAT)
10A
ECU–B
NO. 2
i7
Separate Type Rear Seat Back Cover LH
Seat Heater Control
A48
No. 4 Junction Connector
AI15 (LHD)
AI7 (RHD)
I74
No. 8 Junction Connector
iQ2 (∗1)
iQ1 (∗2)
AQ5
IQ3
IG
RR/RL Seat Heater Switch
E
RLIN
I162
Refreshing Seat Switch
SHDE
B
RLIN
I50(A), I54(B)
A/C Amplifier Assembly
QC

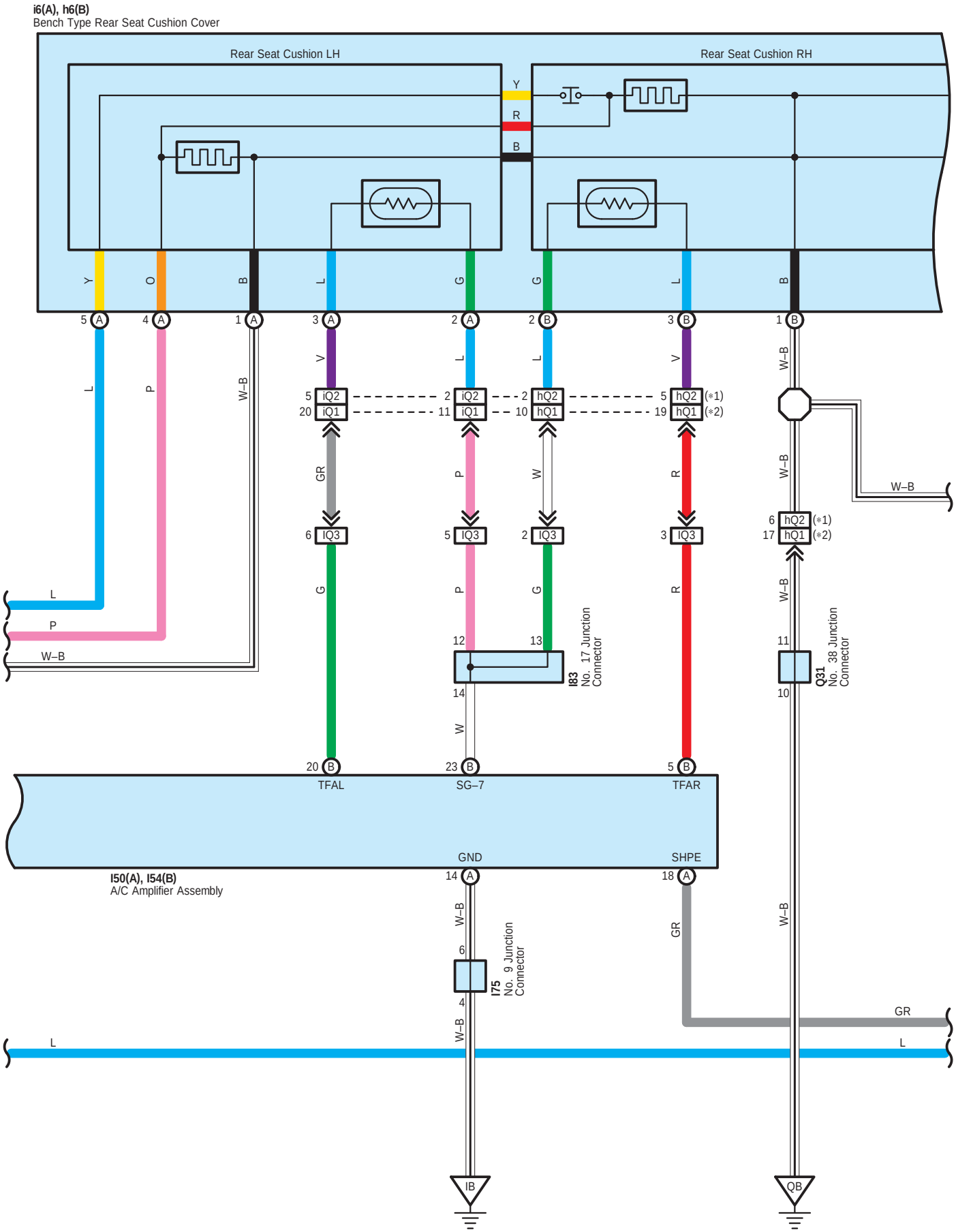
i6(A), h6(B)
Bench Type Rear Seat Cushion Cover
Rear Seat Cushion LH
Rear Seat Cushion RH
Y
R
B
Y
O
B
L
G
G
L
B
5 A
4 A
1 A
3 A
2 A
2 B
3 B
1 B
L
P
W–B
V
L
L
V
W–B
5 iQ2
20 iQ1
2 iQ2
11 iQ1
2 hQ2
10 hQ1
5 hQ2 (*1)
19 hQ1 (*2)
GR
P
W
R
W–B
W–B
6 IQ3
5 IQ3
2 IQ3
3 IQ3
6 hQ2 (*1)
17 hQ1 (*2)
G
P
G
R
W–B
L
P
W–B
12
13
14
I83
No. 17 Junction Connector
11
10
Q31
No. 38 Junction Connector
W
20 B
23 B
5 B
TFAL
SG–7
TFAR
GND
SHPE
I50(A), I54(B)
A/C Amplifier Assembly
14 A
18 A
W–B
GR
W–B
6
4
I75
No. 9 Junction Connector
W–B
GR
L
L
IB
QB

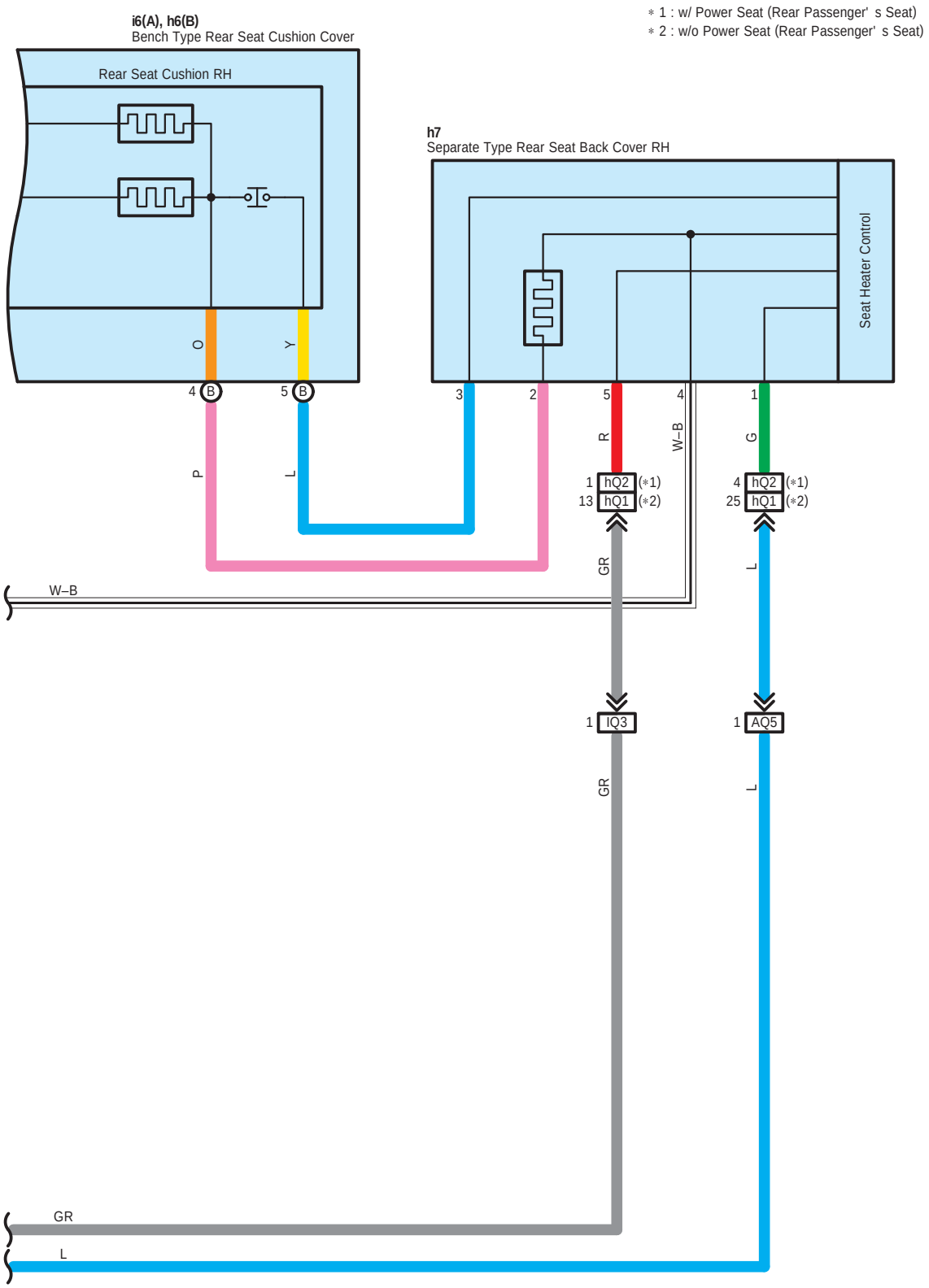
i6(A), h6(B)
Bench Type Rear Seat Cushion Cover
Rear Seat Cushion RH
∗ 1 : w/ Power Seat (Rear Passenger' s Seat)
∗ 2 : w/o Power Seat (Rear Passenger' s Seat)
h7
Separate Type Rear Seat Back Cover RH
Seat Heater Control
O
Y
4 B
5 B
3
2
5
4
1
R
W–B
G
P
L
1 hQ2 (∗1)
13 hQ1 (∗2)
4 hQ2 (∗1)
25 hQ1 (∗2)
GR
L
W–B
1 IQ3
1 AQ5
GR
L
GR
L

A48
Blue

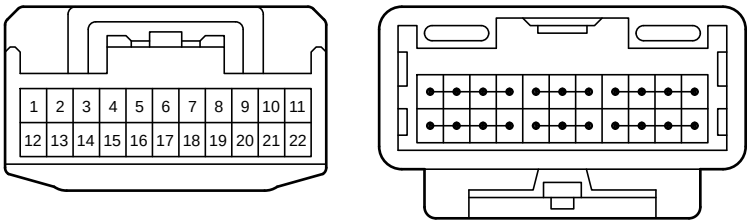

90980-12372

I50
White

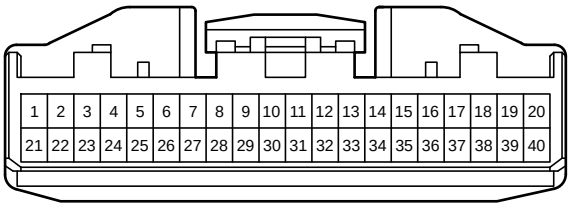

90980-12557

I54
White

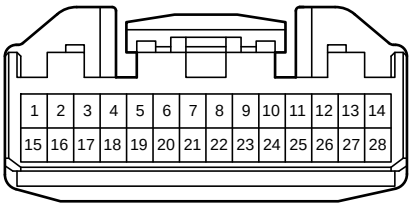

90980-12555

I74
Black

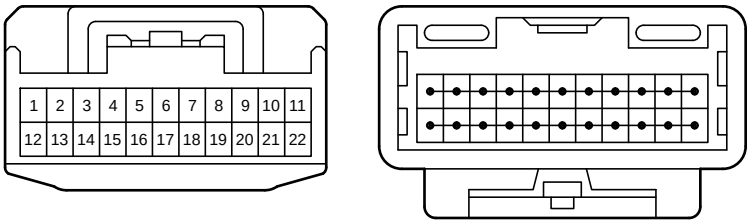

90980-12372

I75
Gray

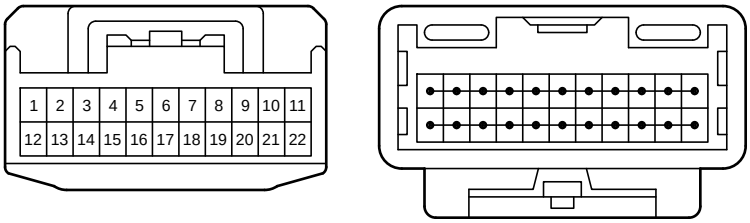

90980-12372
(LHD Before Sep. 2017 Production)

I75
White

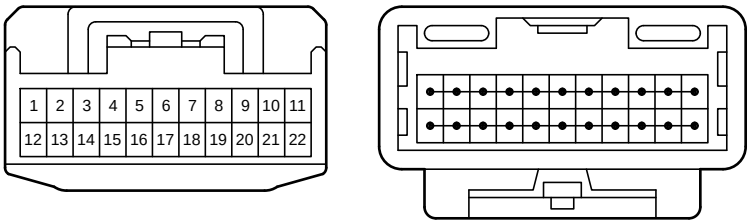

90980-12372
(LHD From Sep. 2017 Production)

I75
Blue

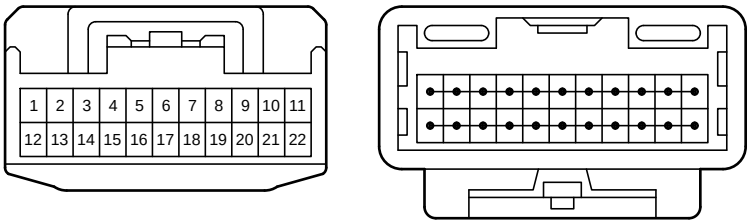

90980-12372
(RHD)

I82
Blue

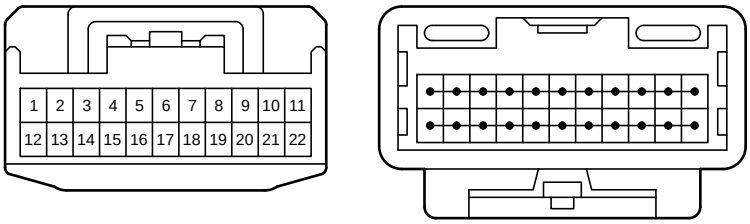

90980-12372
(LHD)

I82
White

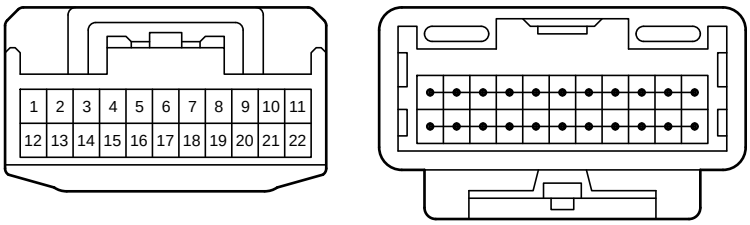

90980-12372
(RHD)

I83
Black

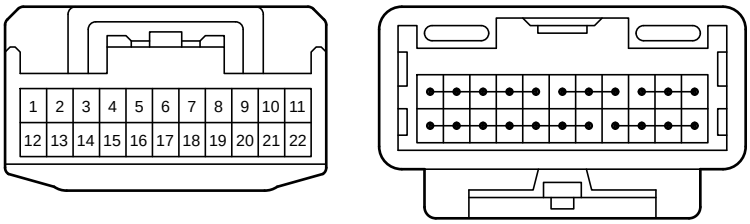

90980-12372
(LHD)

I83
White

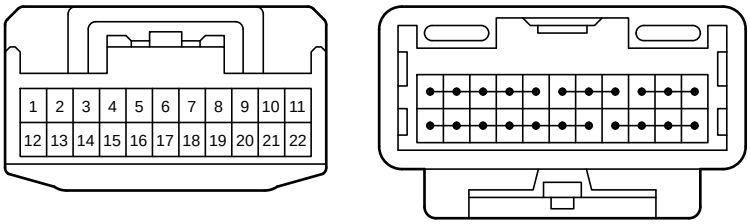

90980-12372
(RHD)

I84
Black

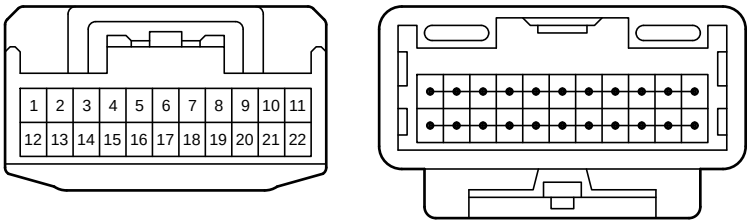

90980-12372
(LHD)

I84
Gray

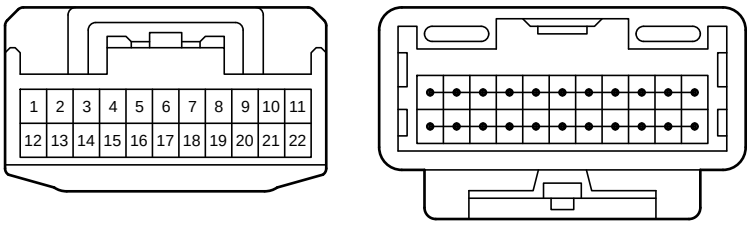

90980-12372
(RHD)

I162
White

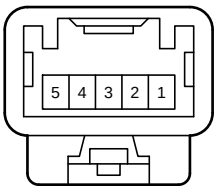

90980-12365

Q31
White

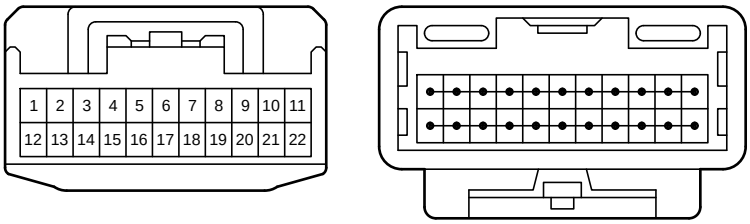

90980-12372

h6
Gray

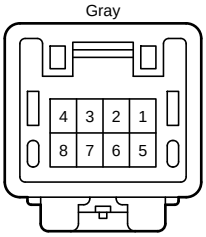

90980-12734

h7
Gray

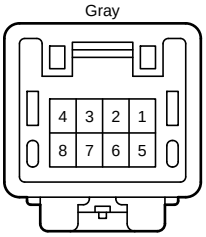

90980-12734

i6
White

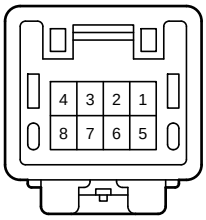

90980-12734

i7
White

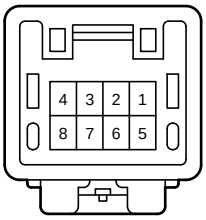

90980-12734

4C
White

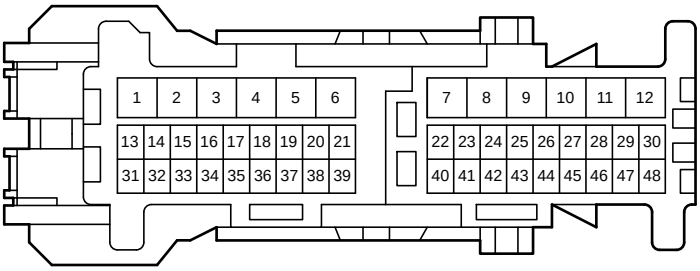

90980-12887

AI5
White

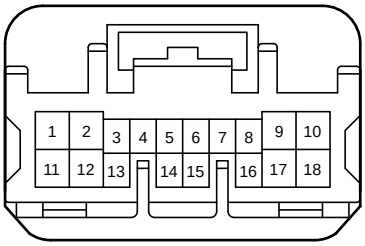

90980-12739

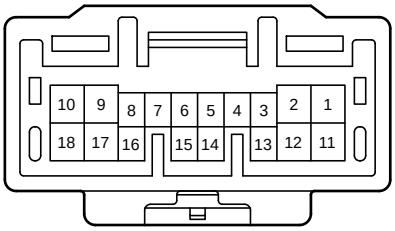

90980-12738

(LHD)

AI5
Black

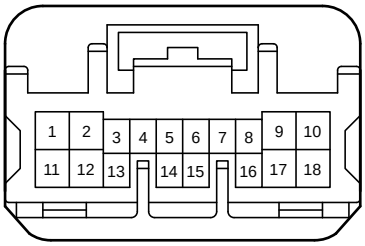

90980-12739

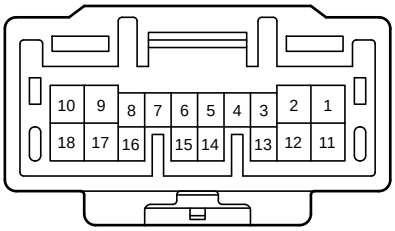

90980-12738

(RHD)

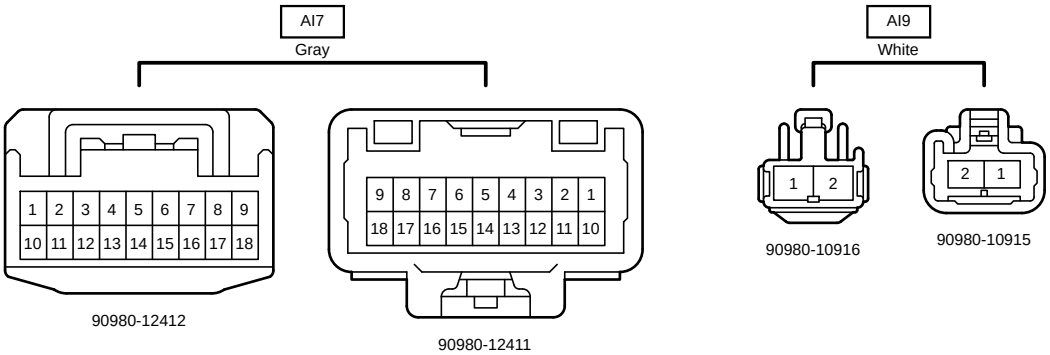
AI7
Gray
1 2 3 4 5 6 7 8 9
10 11 12 13 14 15 16 17 18
90980-12412
9 8 7 6 5 4 3 2 1
18 17 16 15 14 13 12 11 10
90980-12411
AI9
White
1 2
90980-10916
2 1
90980-10915

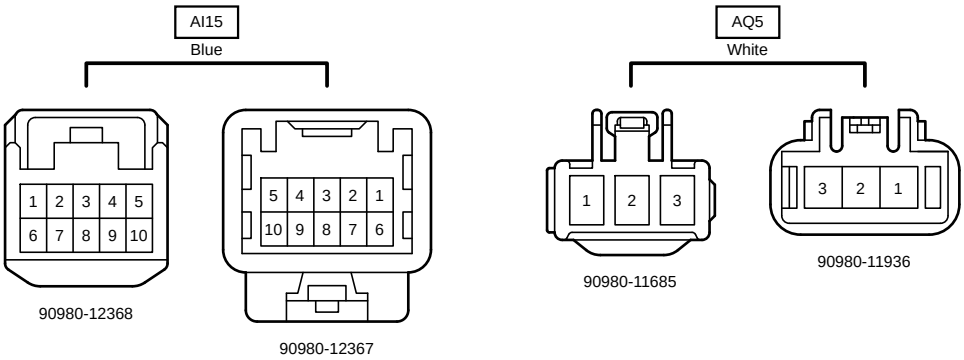
AI15
Blue
1 2 3 4 5
6 7 8 9 10
90980-12368
5 4 3 2 1
10 9 8 7 6
90980-12367
AQ5
White
1 2 3
90980-11685
3 2 1
90980-11936

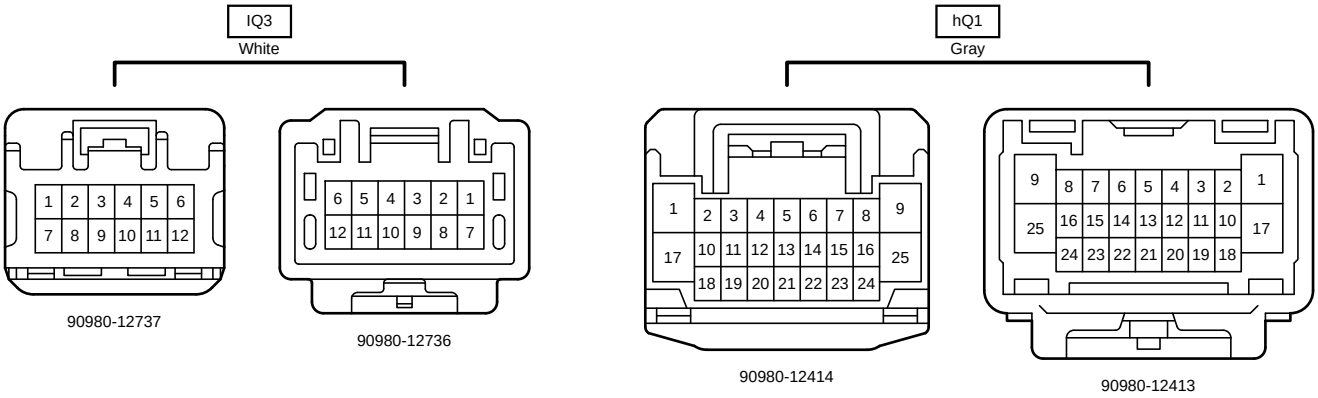
IQ3
White
1 2 3 4 5 6
7 8 9 10 11 12
90980-12737
6 5 4 3 2 1
12 11 10 9 8 7
90980-12736
hQ1
Gray
1 2 3 4 5 6 7 8 9
17 10 11 12 13 14 15 16 25
18 19 20 21 22 23 24
90980-12414
9 8 7 6 5 4 3 2 1
25 16 15 14 13 12 11 10 17
24 23 22 21 20 19 18
90980-12413

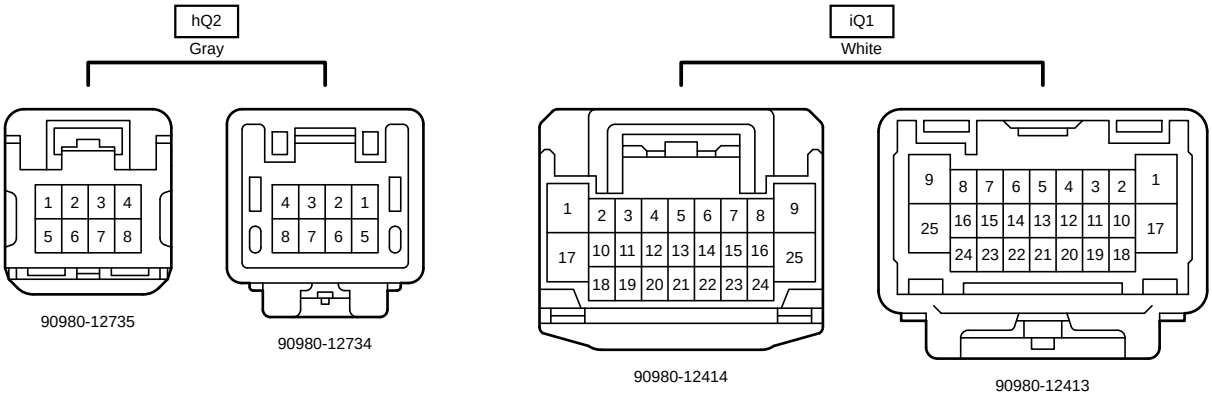
hQ2
Gray
1 2 3 4
5 6 7 8
90980-12735
4 3 2 1
8 7 6 5
90980-12734
iQ1
White
1 2 3 4 5 6 7 8 9
17 10 11 12 13 14 15 16 25
18 19 20 21 22 23 24
90980-12414
9 8 7 6 5 4 3 2 1
25 16 15 14 13 12 11 10 17
24 23 22 21 20 19 18
90980-12413

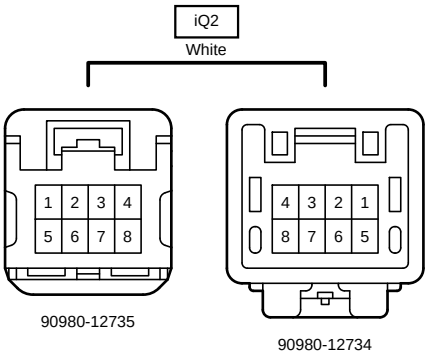
iQ2
White
1 2 3 4
5 6 7 8
90980-12735
4 3 2 1
8 7 6 5
90980-12734