(Cont. next page)

Adaptive Variable Suspension

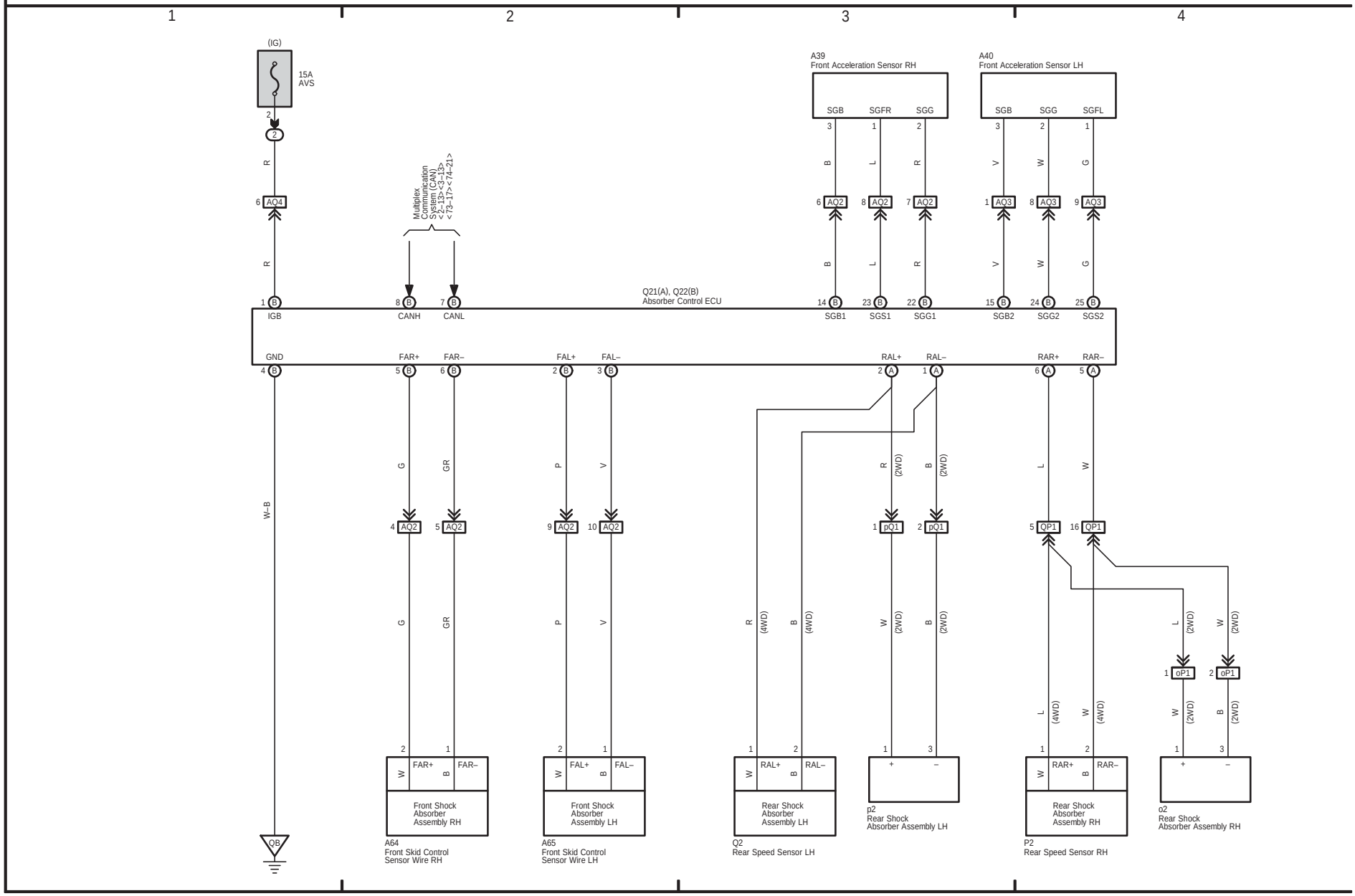
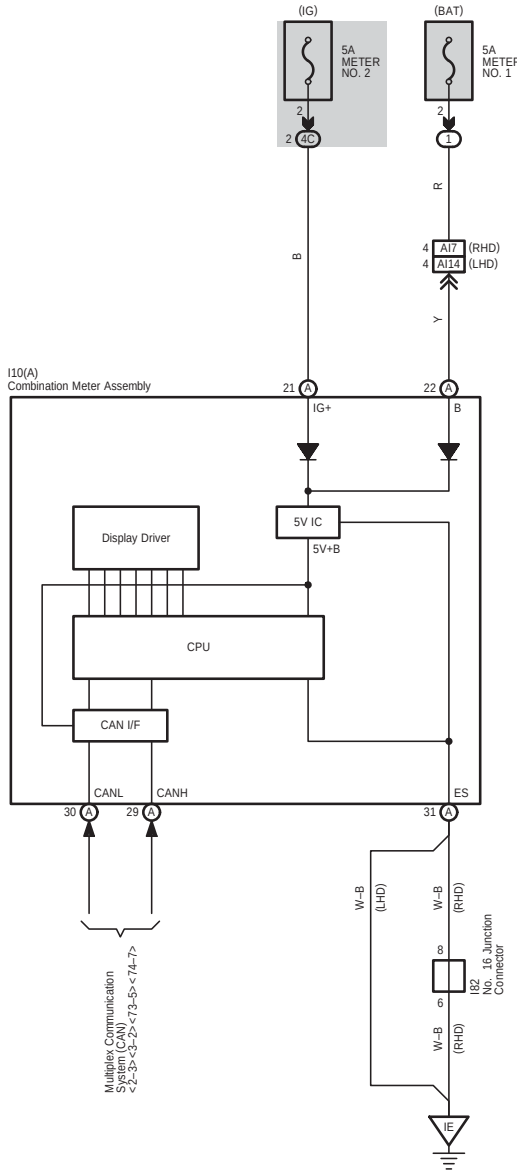
Adaptive Variable Suspension