(Cont. next page)

Power Window (RHD)

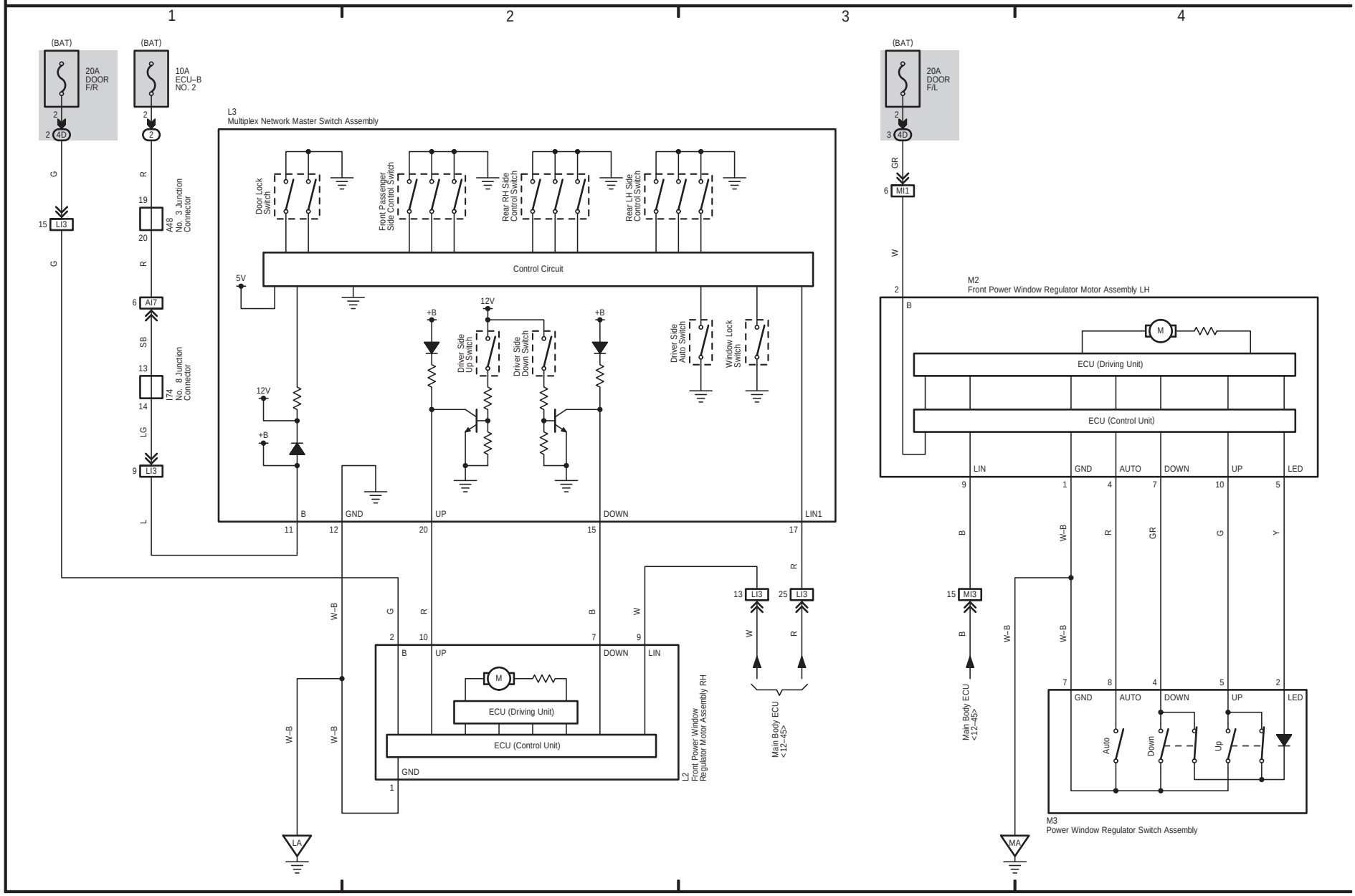
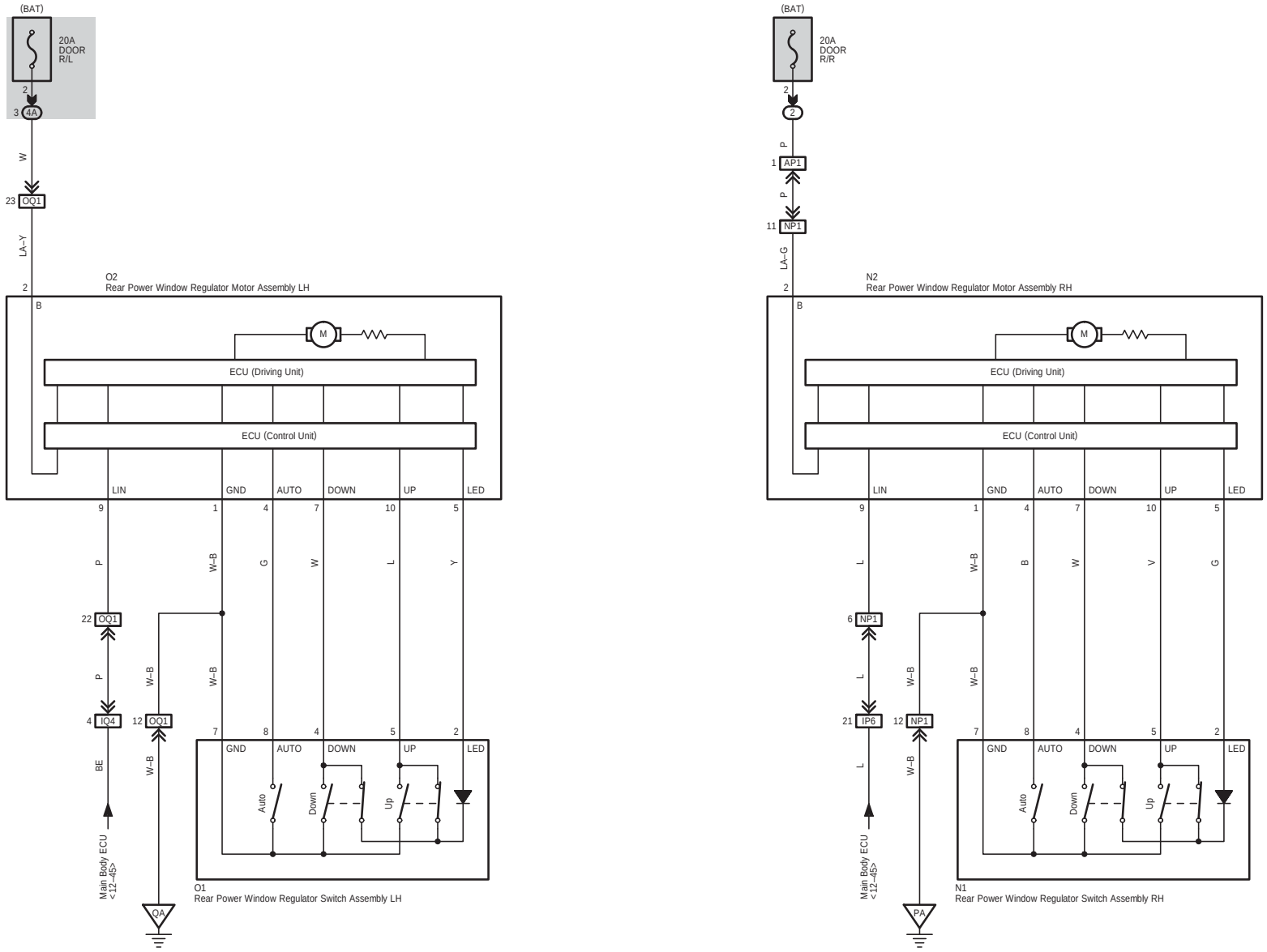
Power Window (RHD)