(Cont. next page)

Audio System (w/ LEXUS Navigation System) (Before Sep. 2017 Production), Back Guide Monitor System (Before Sep. 2017 Production), LEXUS Navigation System (Before Sep. 2017 Production)

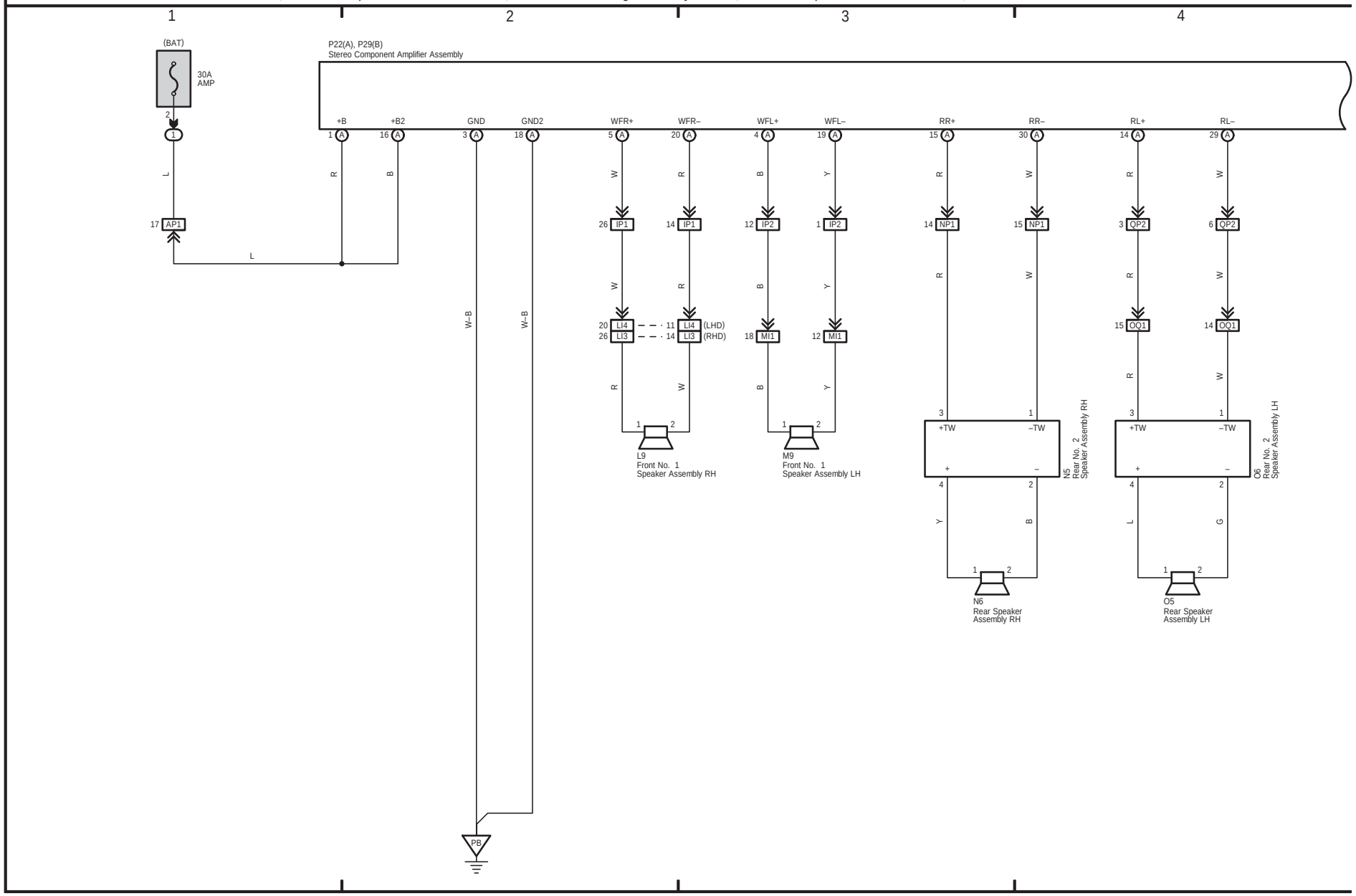

(Cont. next page)

Audio System (w/ LEXUS Navigation System) (Before Sep. 2017 Production), Back Guide Monitor System (Before Sep. 2017 Production), LEXUS Navigation System (Before Sep. 2017 Production)

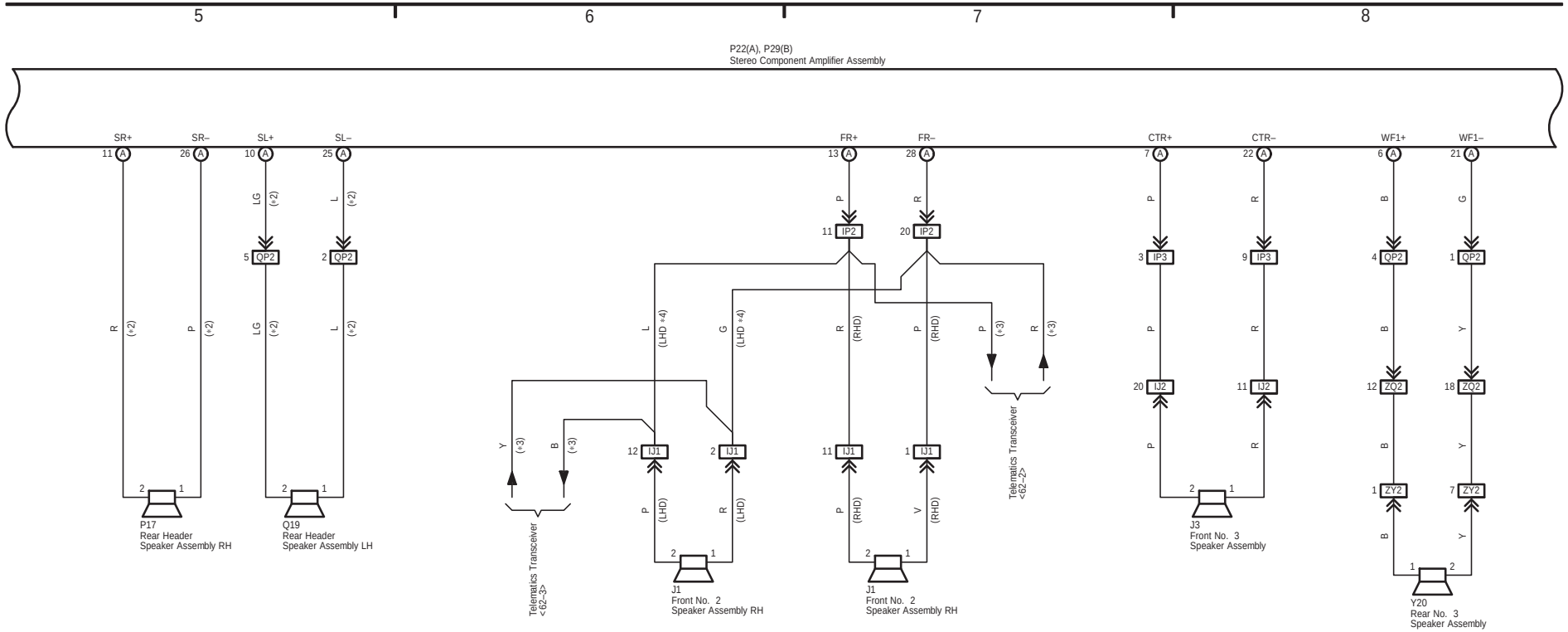

* 2 : 14 Speaker
* 3 : w/ Telematics System
* 4 : w/o Telematics System

(Cont. next page)

Audio System (w/ LEXUS Navigation System) (Before Sep. 2017 Production), Back Guide Monitor System (Before Sep. 2017 Production), LEXUS Navigation System (Before Sep. 2017 Production)

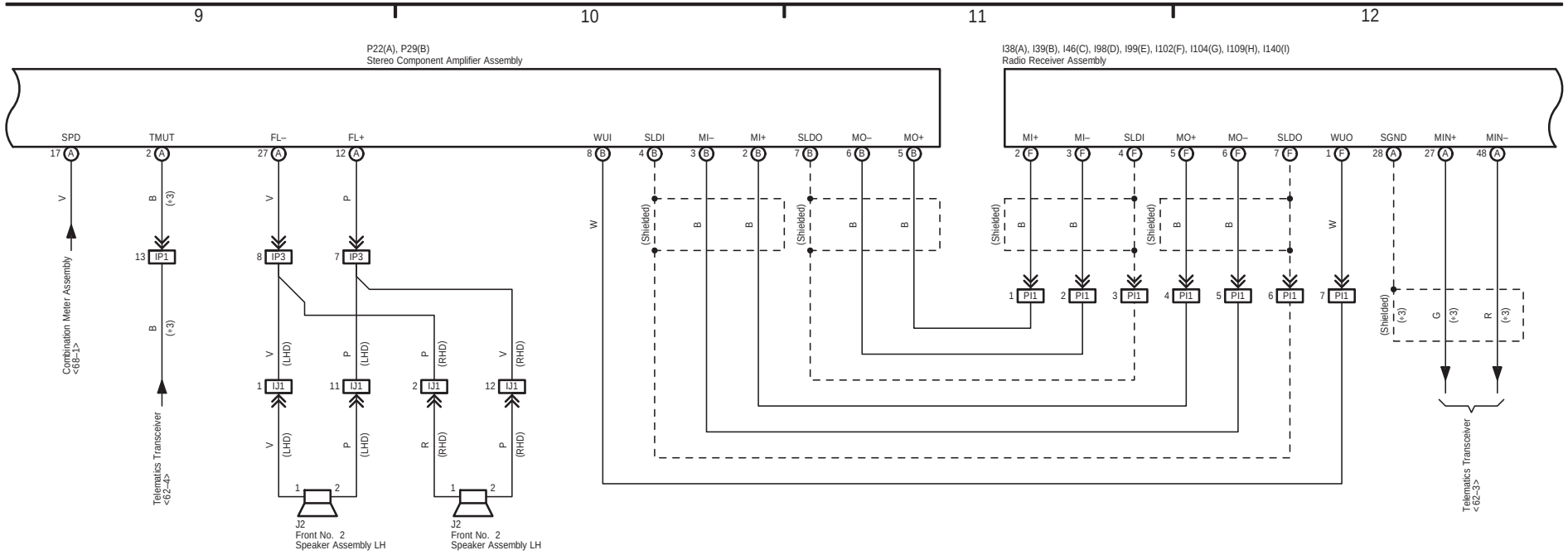

* 3 : w/ Telematics System

(Cont. next page)

Audio System (w/ LEXUS Navigation System) (Before Sep. 2017 Production), Back Guide Monitor System (Before Sep. 2017 Production), LEXUS Navigation System (Before Sep. 2017 Production)

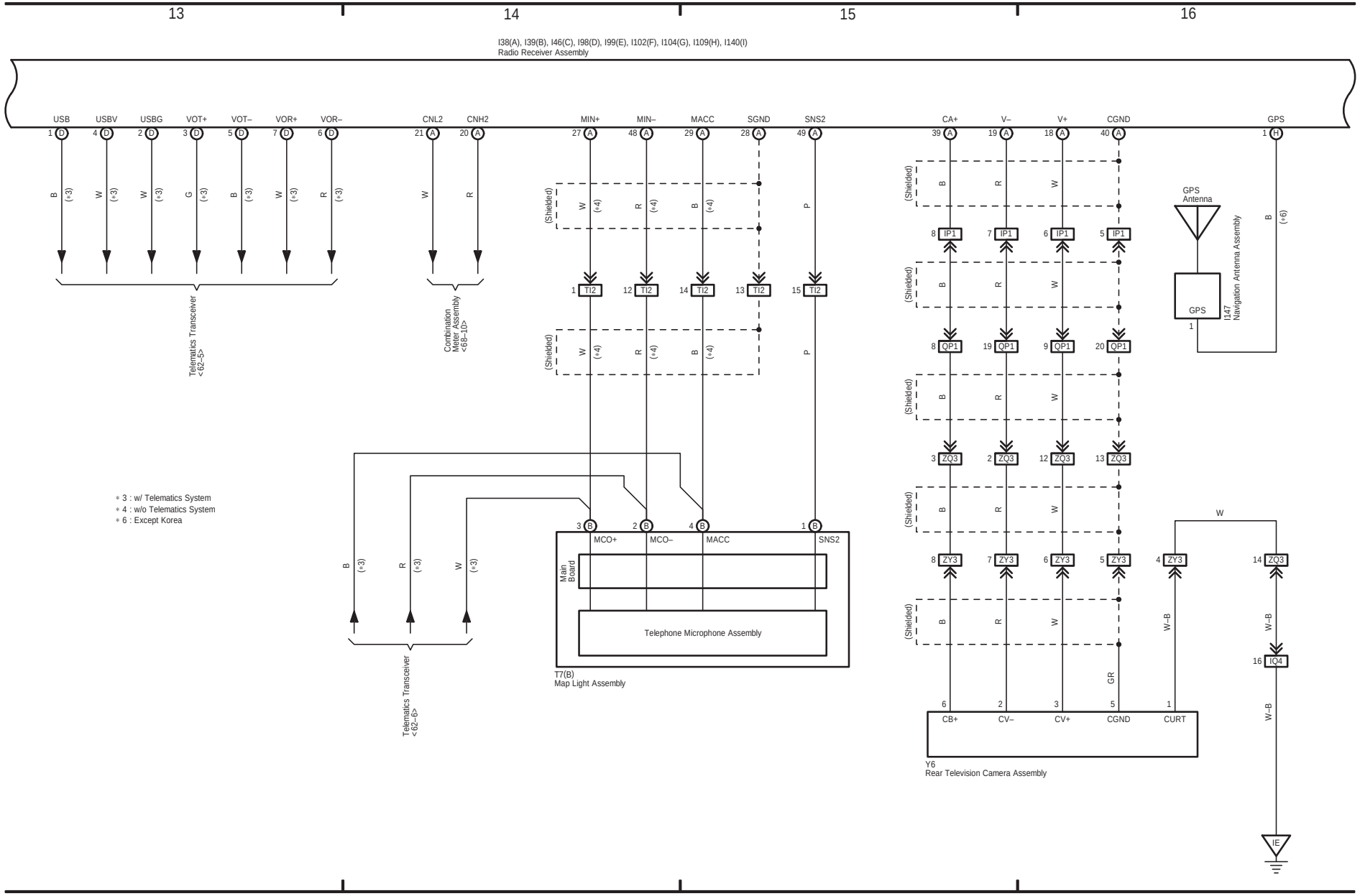

(Cont. next page)

Audio System (w/ LEXUS Navigation System) (Before Sep. 2017 Production), Back Guide Monitor System (Before Sep. 2017 Production), LEXUS Navigation System (Before Sep. 2017 Production)

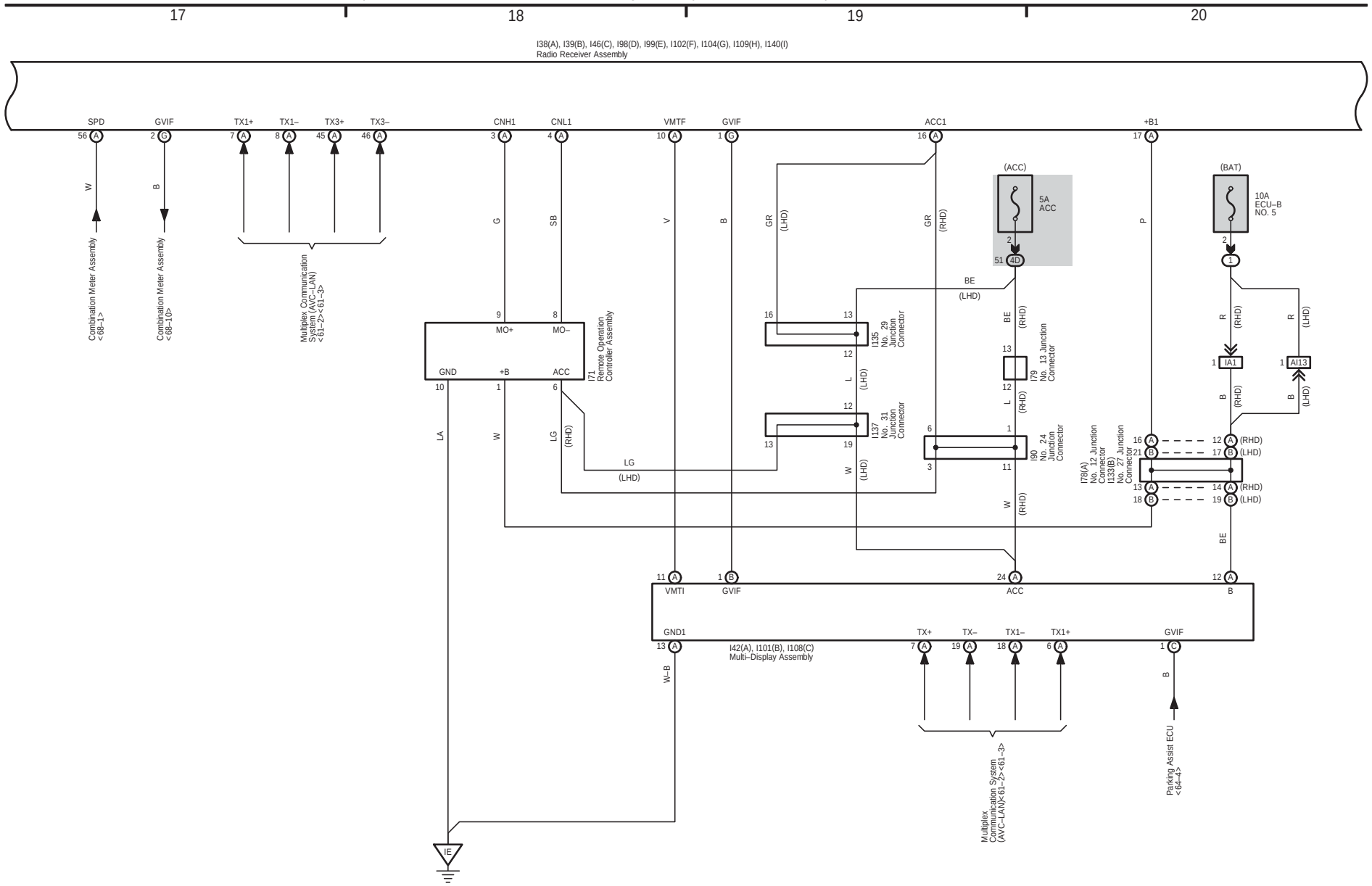

(Cont. next page)

Audio System (w/ LEXUS Navigation System) (Before Sep. 2017 Production), Back Guide Monitor System (Before Sep. 2017 Production), LEXUS Navigation System (Before Sep. 2017 Production)

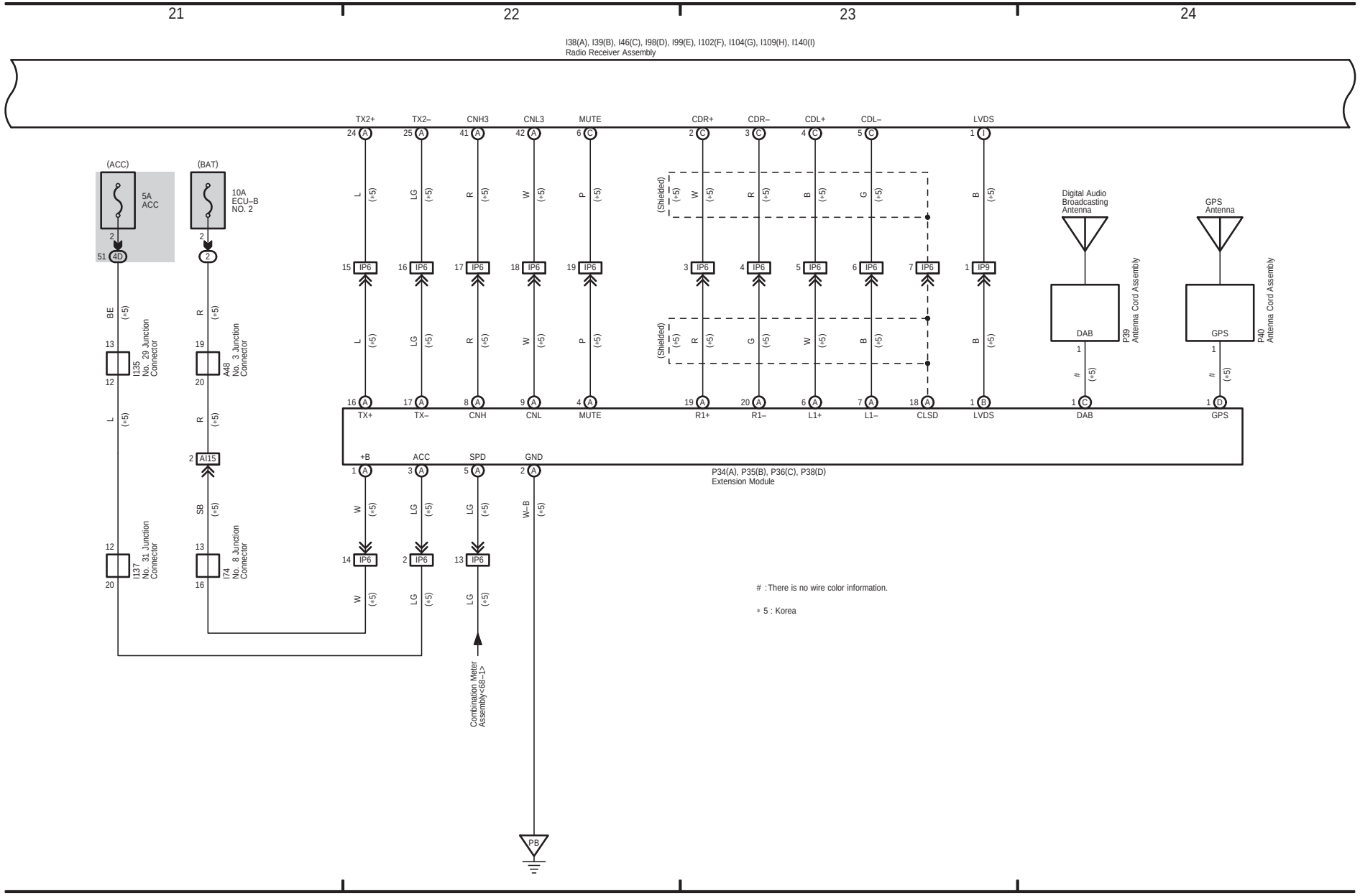

Audio System (w/ LEXUS Navigation System) (Before Sep. 2017 Production), Back Guide Monitor System (Before Sep. 2017 Production), LEXUS Navigation System (Before Sep. 2017 Production)

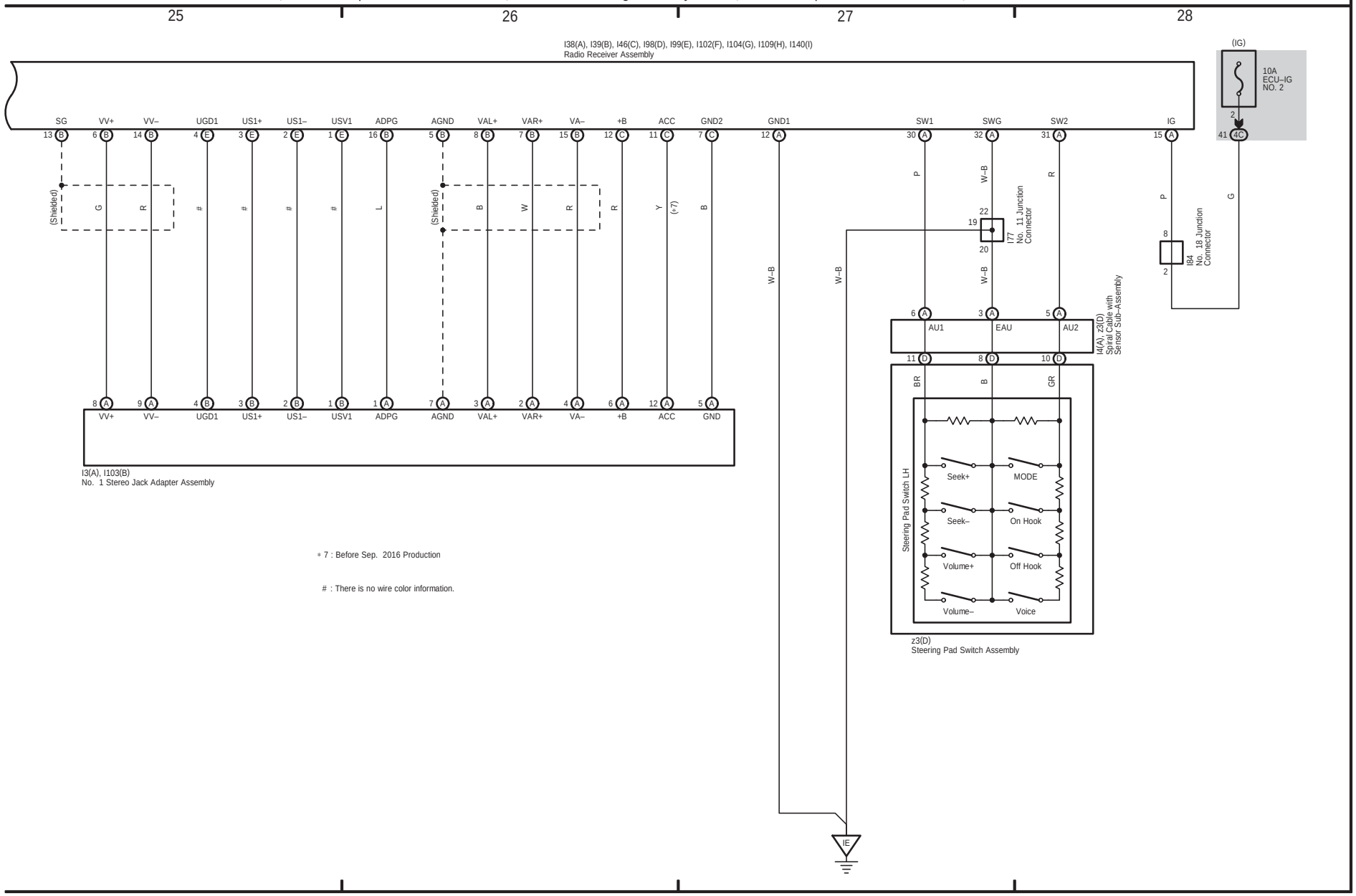

* 7 : Before Sep. 2016 Production

: There is no wire color information.