[Instrument Panel J/B Assembly Inner Circuit]

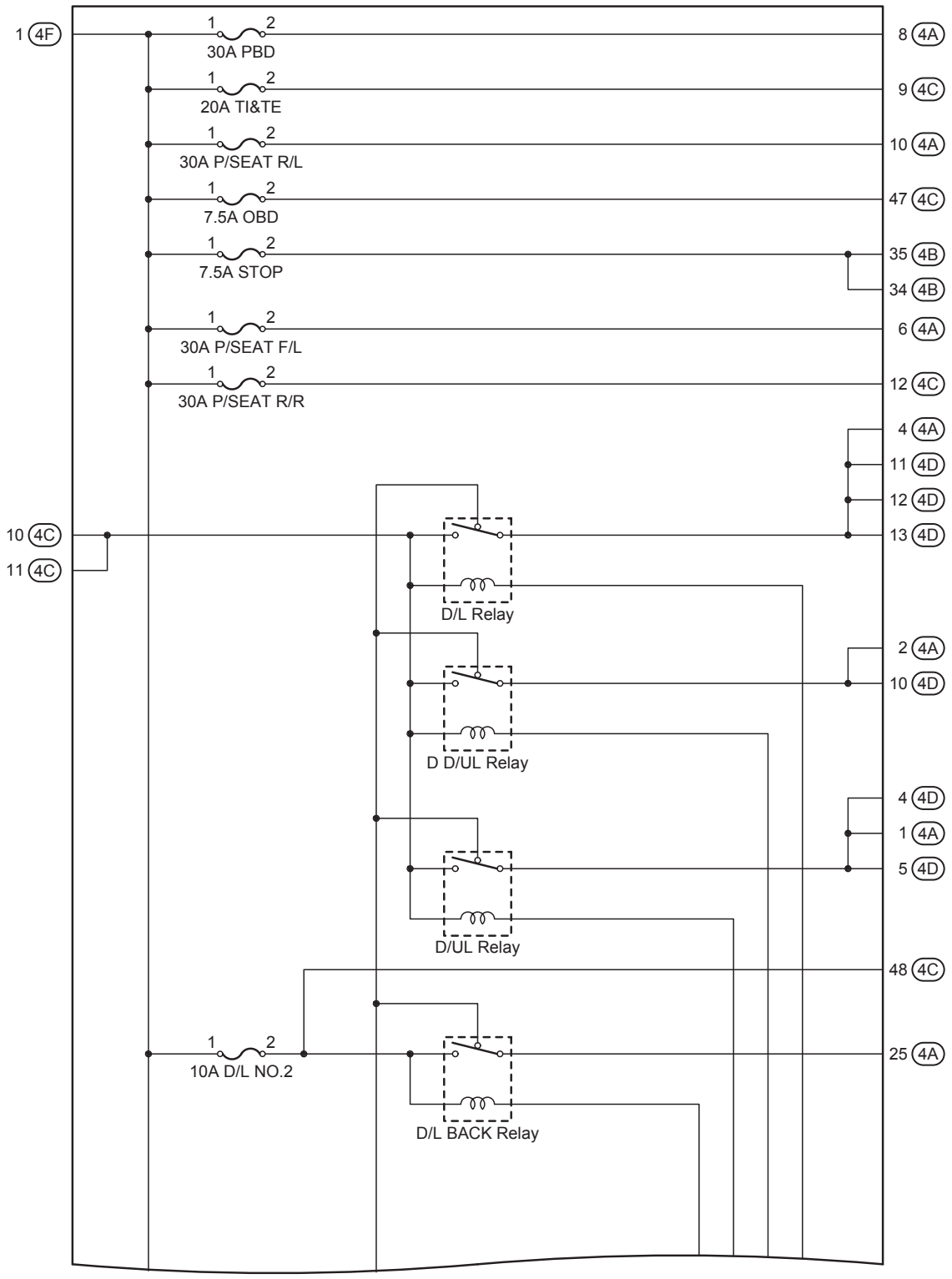

(Cont. Next Page)

(Cont'd)

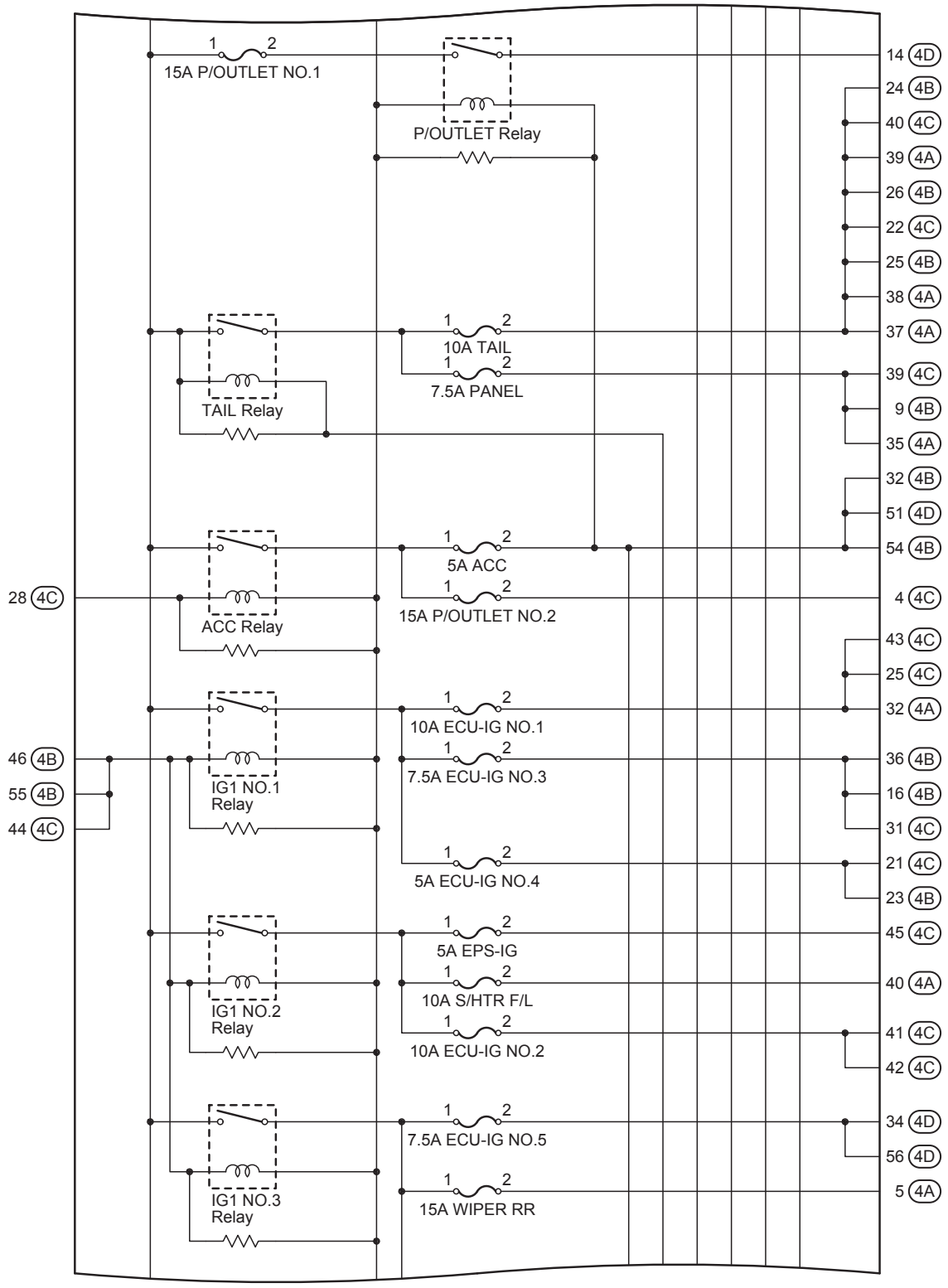

(Cont. Next Page)

[Instrument Panel J/B Assembly Inner Circuit]

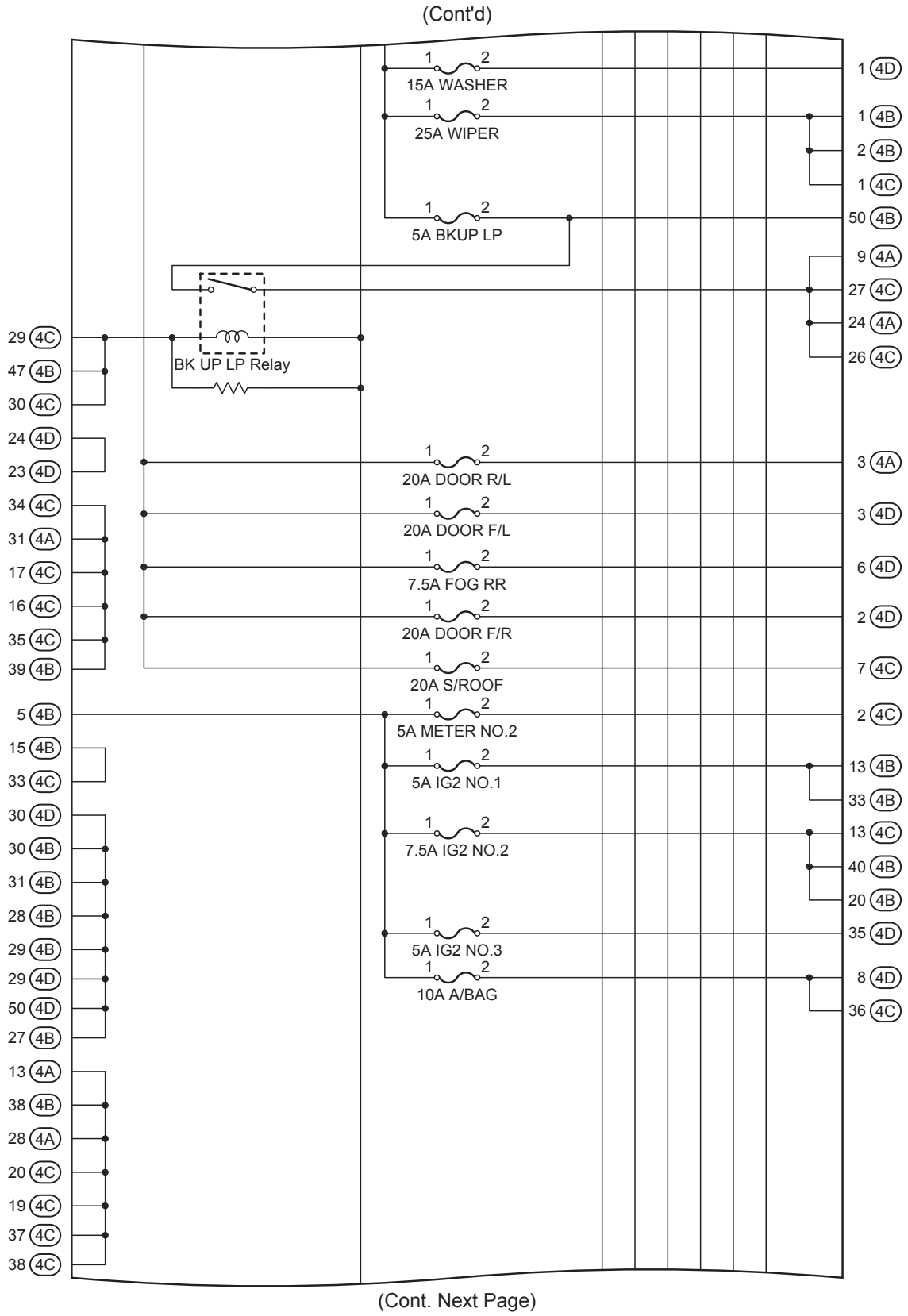

(Cont'd)

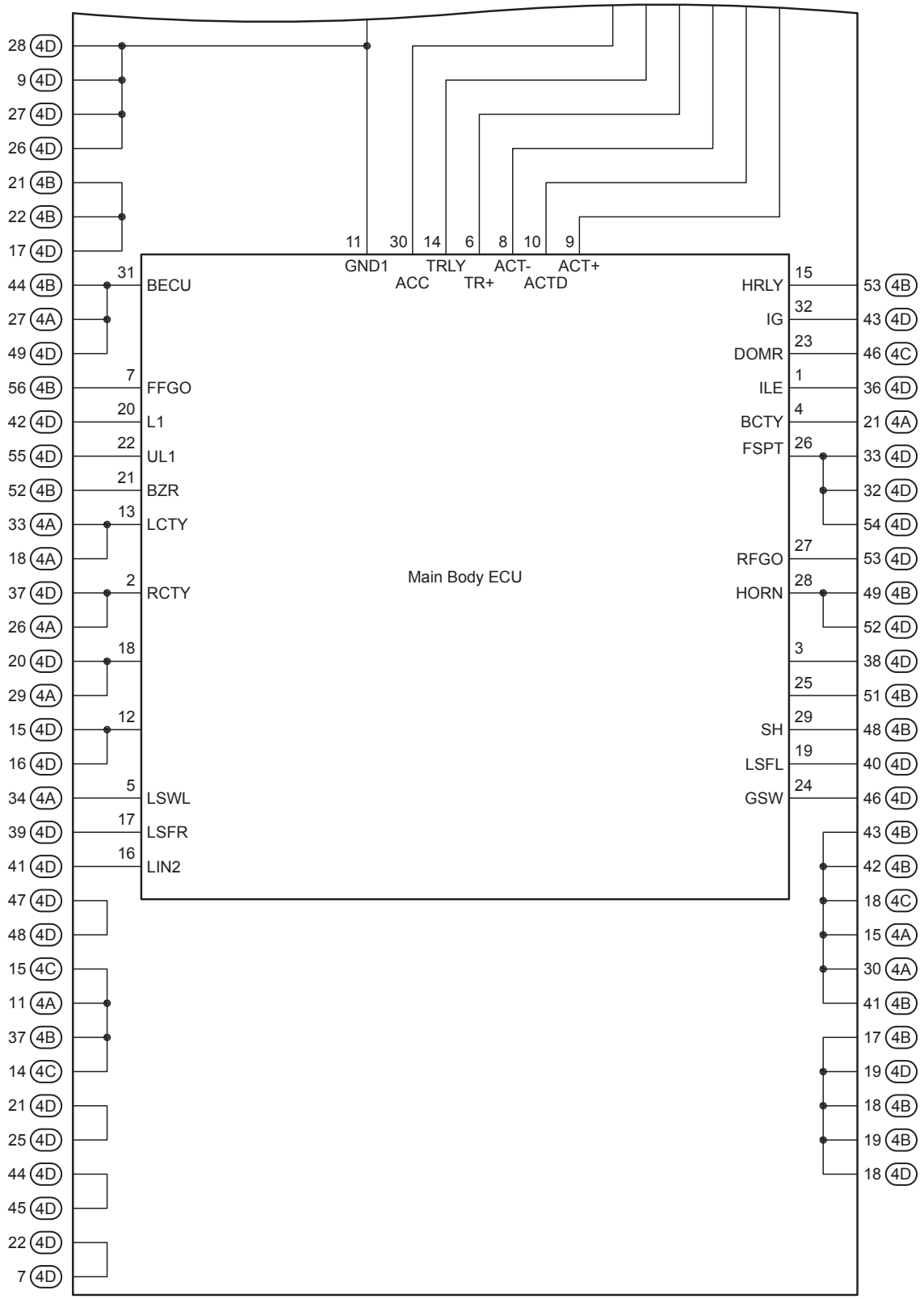
Main Body ECU
11 GND1
30 ACC
14 TRLY
6 TR+
8 ACT-
10 ACTD
9 ACT+
31 BECU
7 FFGO
20 L1
22 UL1
21 BZR
13 LCTY
2 RCTY
18
12
5 LSWL
17 LSFR
16 LIN2
15 HRLY
32 IG
23 DOMR
1 ILE
4 BCTY
26 FSPT
27 RFGO
28 HORN
3
25
29 SH
19 LSFL
24 GSW
28 4D
9 4D
27 4D
26 4D
21 4B
22 4B
17 4D
44 4B
27 4A
49 4D
56 4B
42 4D
55 4D
52 4B
33 4A
18 4A
37 4D
26 4A
20 4D
29 4A
15 4D
16 4D
34 4A
39 4D
41 4D
47 4D
48 4D
15 4C
11 4A
37 4B
14 4C
21 4D
25 4D
44 4D
45 4D
22 4D
7 4D
53 4B
43 4D
46 4C
36 4D
21 4A
33 4D
32 4D
54 4D
53 4D
49 4B
52 4D
38 4D
51 4B
48 4B
40 4D
46 4D
43 4B
42 4B
18 4C
15 4A
30 4A
41 4B
17 4B
19 4D
18 4B
19 4B
18 4D