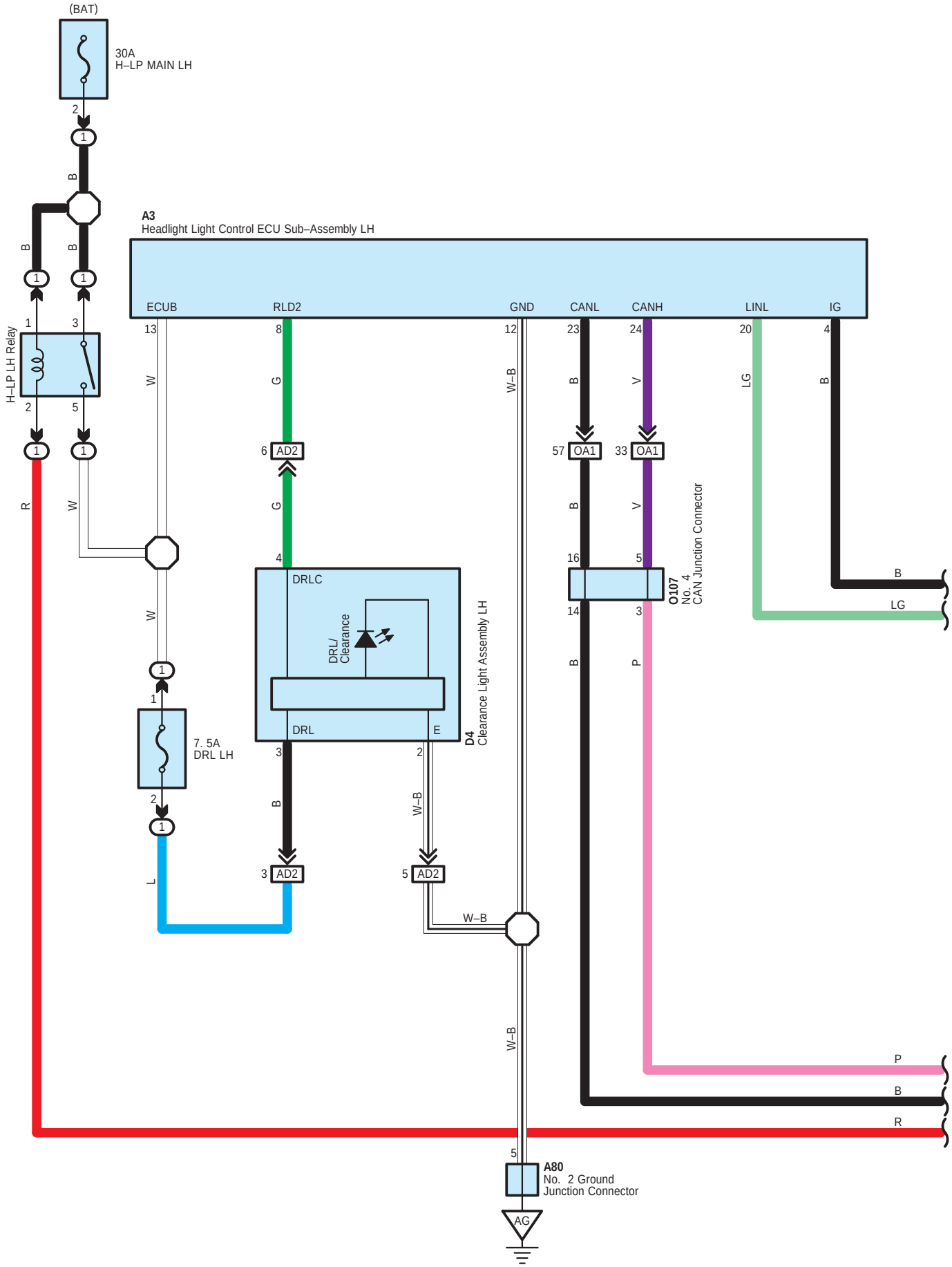
(BAT)
30A
H–LP MAIN LH
A3
Headlight Light Control ECU Sub–Assembly LH
ECUB
RLD2
GND
CANL
CANH
LINL
IG
H–LP LH Relay
AD2
OA1
DRLC
DRL/
Clearance
DRL
E
D4
Clearance Light Assembly LH
7. 5A
DRL LH
O107
No. 4
CAN Junction Connector
A80
No. 2 Ground
Junction Connector
AG

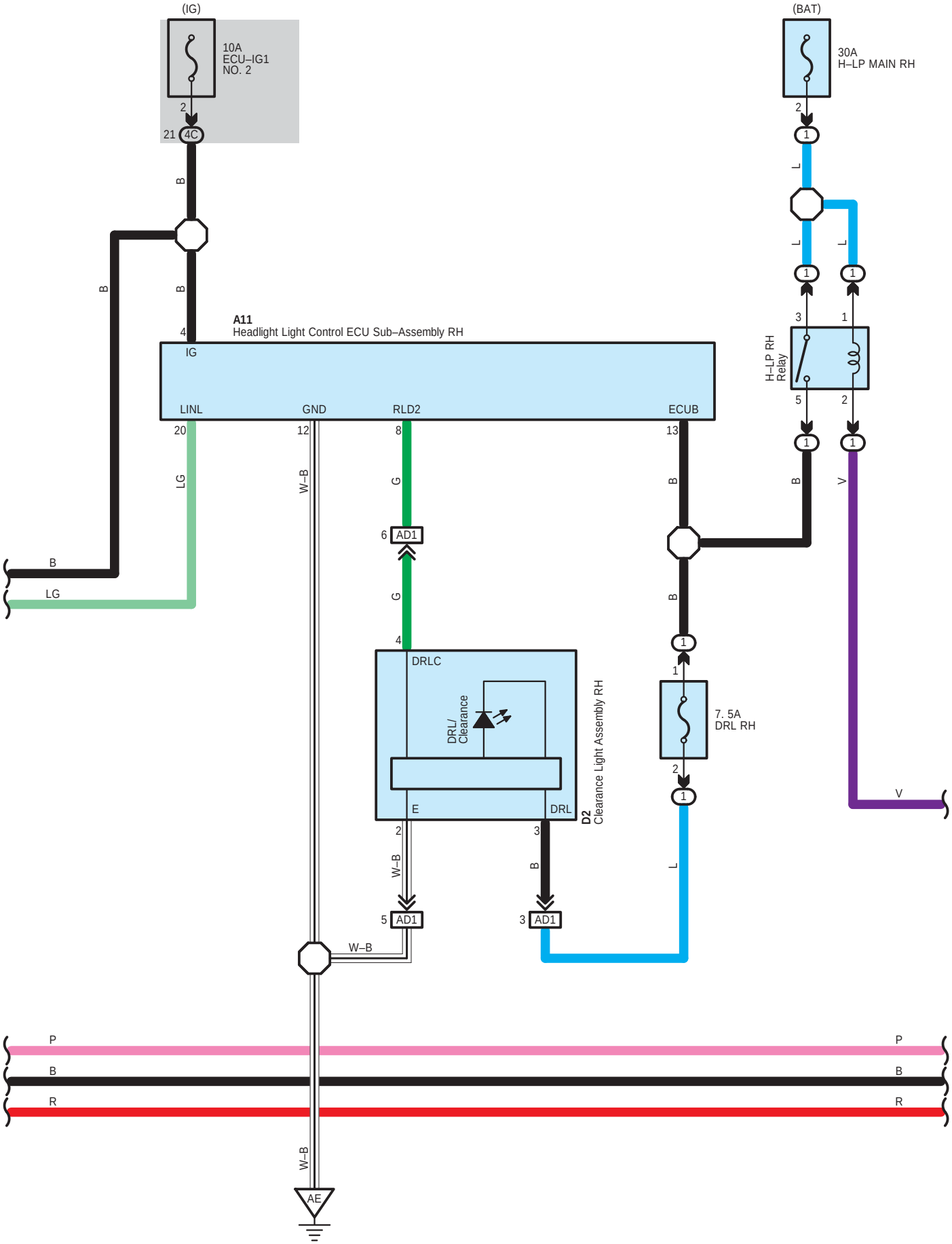
(IG)
10A
ECU–IG1
NO. 2
2
21 4C
B
B
B
4
A11
Headlight Light Control ECU Sub–Assembly RH
IG
LINL
GND
RLD2
ECUB
20
12
8
13
LG
W–B
G
B
6 AD1
B
LG
G
B
4
DRLC
DRL/
Clearance
E
DRL
D2
Clearance Light Assembly RH
2
3
W–B
B
5 AD1
3 AD1
W–B
(BAT)
30A
H–LP MAIN RH
2
1
L
L
L
1
1
3
1
H–LP RH
Relay
5
2
1
1
B
V
1
1
7. 5A
DRL RH
2
1
L
V
P
B
R
P
B
R
W–B
AE

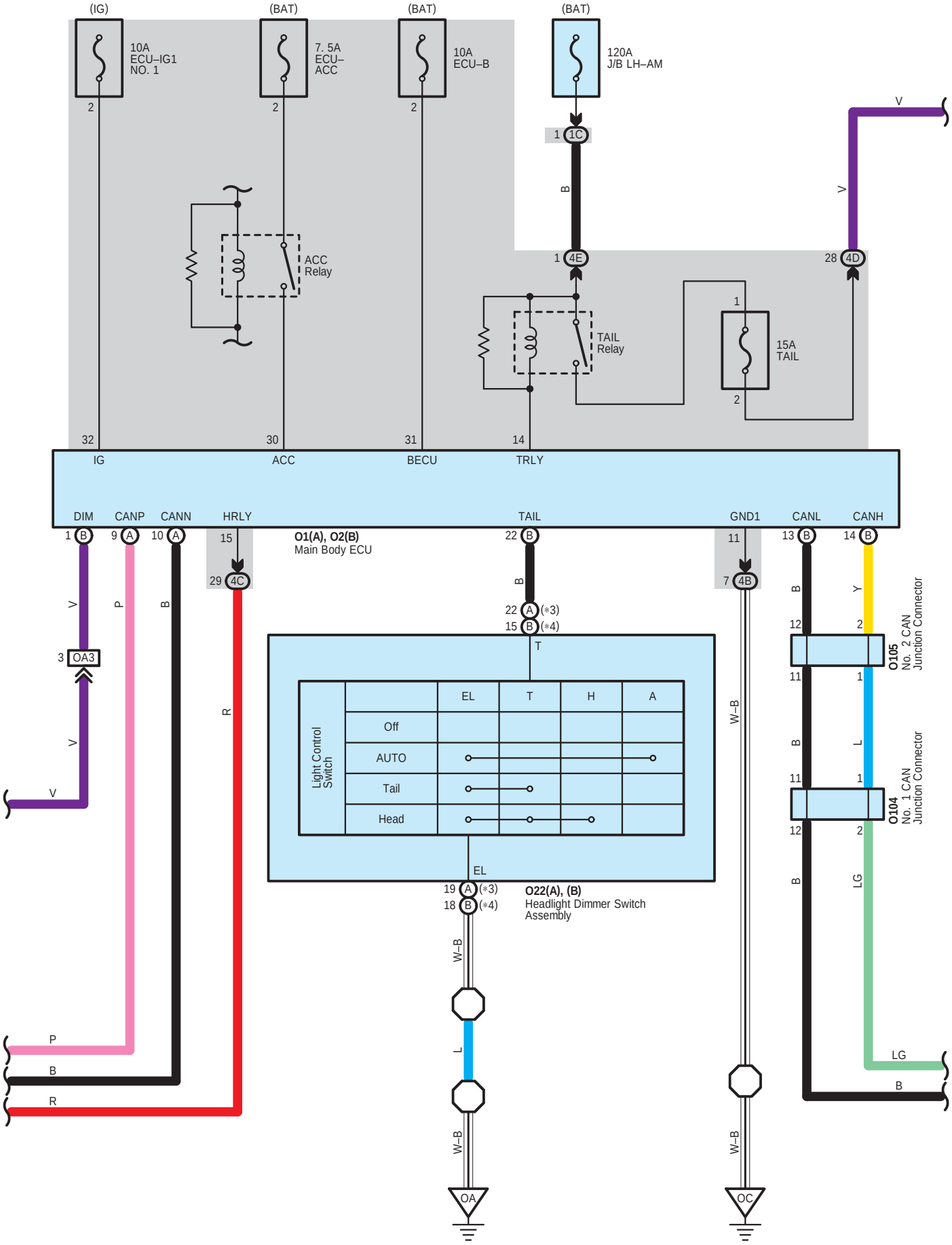
(IG)
(BAT)
(BAT)
(BAT)
10A
ECU–IG1
NO. 1
7. 5A
ECU–
ACC
10A
ECU–B
120A
J/B LH–AM
ACC
Relay
TAIL
Relay
15A
TAIL
IG
ACC
BECU
TRLY
DIM
CANP
CANN
HRLY
TAIL
GND1
CANL
CANH
O1(A), O2(B)
Main Body ECU
OA3
Light Control
Switch
EL
T
H
A
Off
AUTO
Tail
Head
O22(A), (B)
Headlight Dimmer Switch
Assembly
O105
No. 2 CAN
Junction Connector
O104
No. 1 CAN
Junction Connector
OA
OC

＊3 : Light Control Switch LH Side Type
＊4 : Light Control Switch RH Side Type

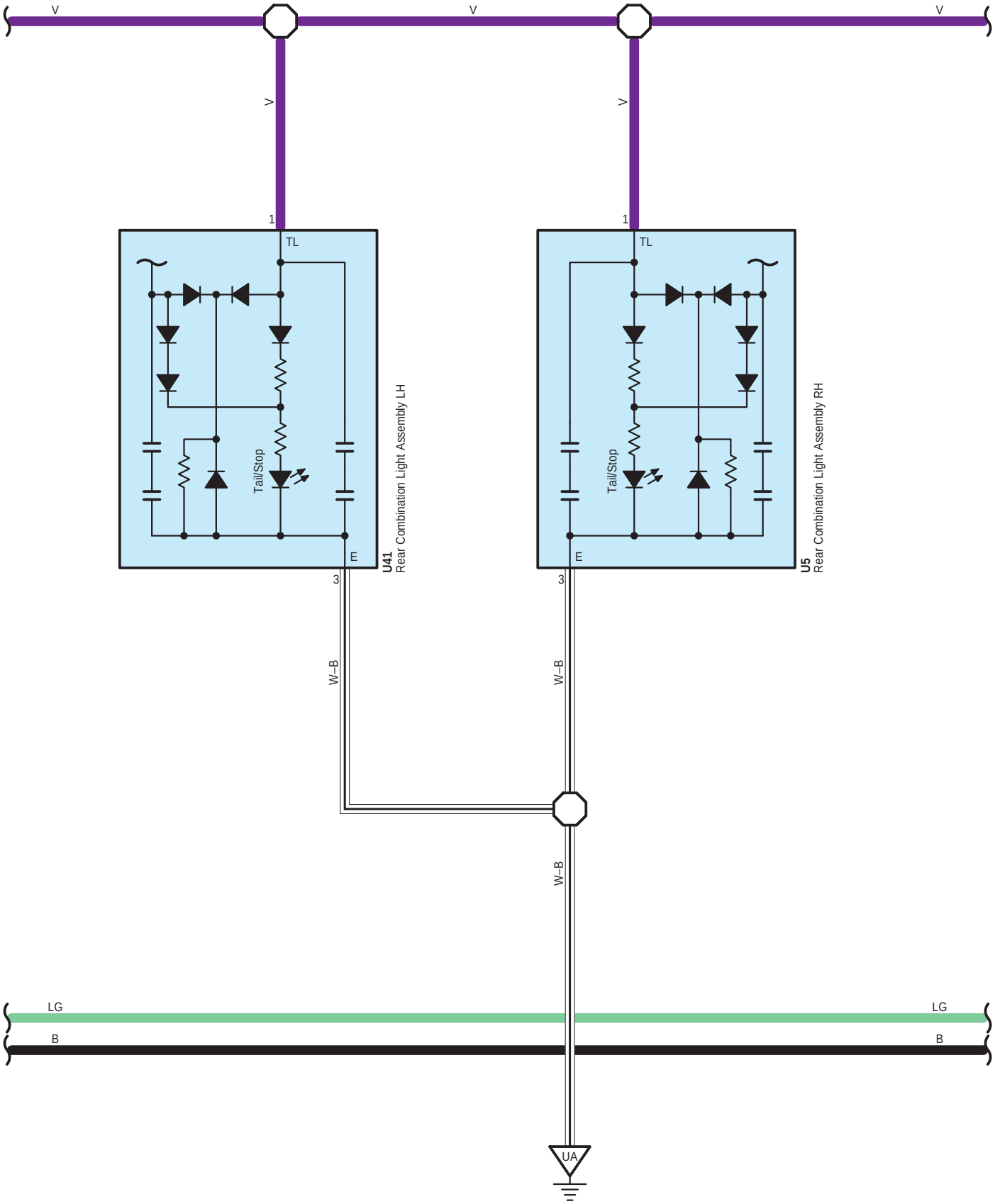

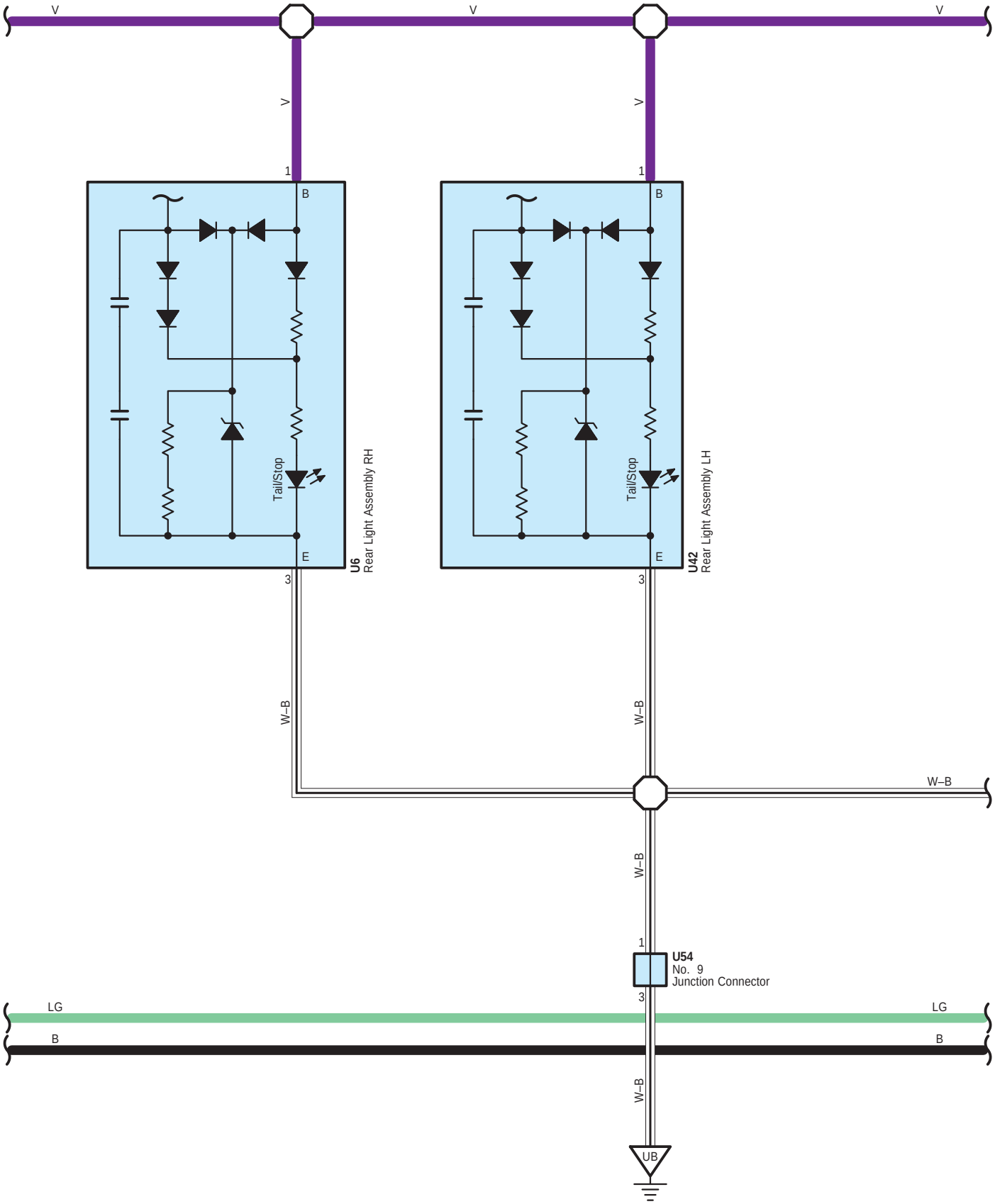
V
V
V
V
V
1
B
Tail/Stop
E
3
U6
Rear Light Assembly RH
1
B
Tail/Stop
E
3
U42
Rear Light Assembly LH
W–B
W–B
W–B
W–B
1
U54
No. 9
Junction Connector
3
LG
LG
B
B
W–B
UB

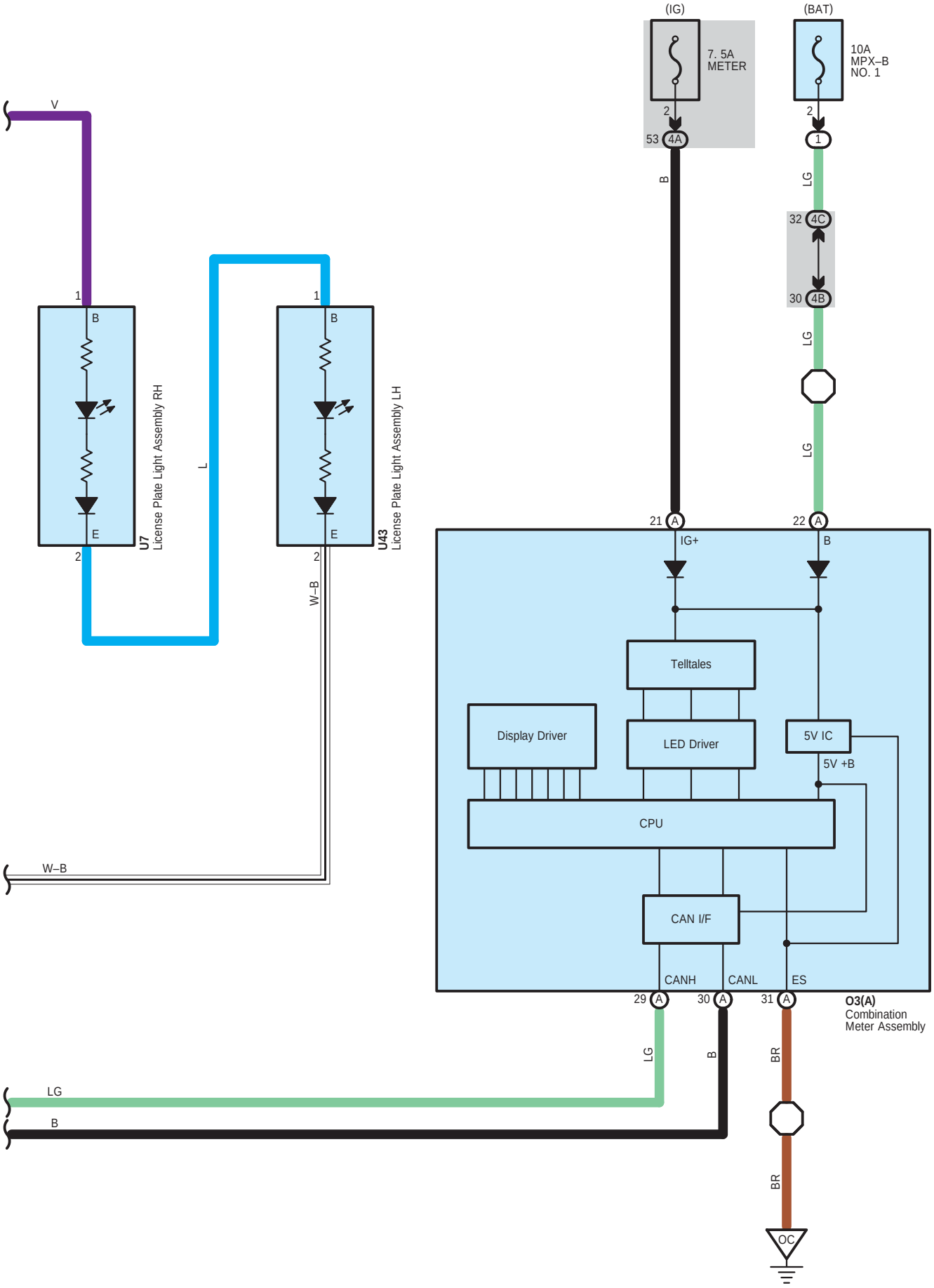
(IG)
(BAT)
7. 5A
METER
10A
MPX–B
NO. 1
V
1
B
E
2
U7
License Plate Light Assembly RH
L
U43
License Plate Light Assembly LH
W–B
53
4A
32
4C
30
4B
LG
21
22
IG+
Telltales
Display Driver
LED Driver
5V IC
5V +B
CPU
CAN I/F
CANH
CANL
ES
29
30
31
O3(A)
Combination
Meter Assembly
BR
OC

A3
Gray

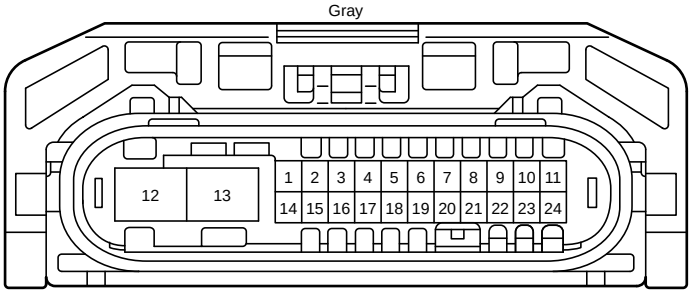

90980-12A92

A11
Gray

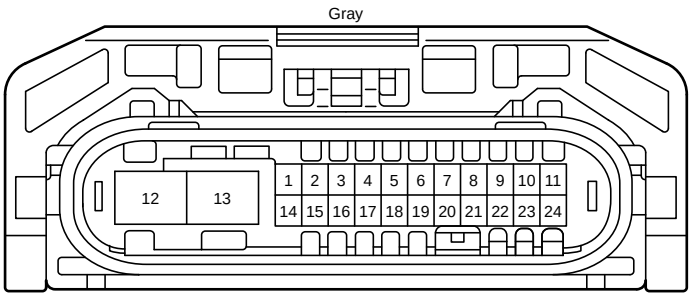

90980-12A92

A80
White

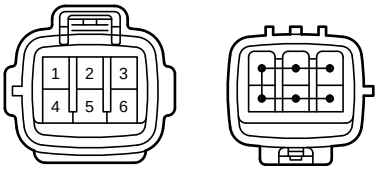

90980-11194

D2
Gray

90980-11292

D4
Gray

90980-11292

O1
White

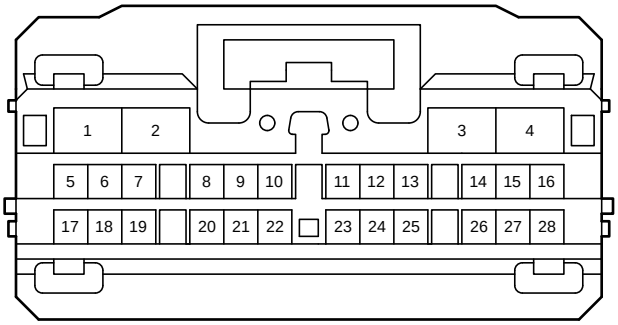

90980-12908

O2
White

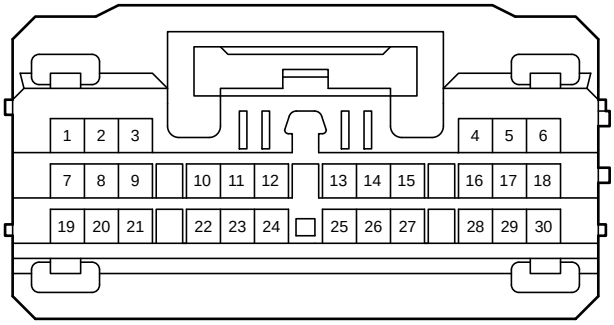

90980-12909

O3
Black

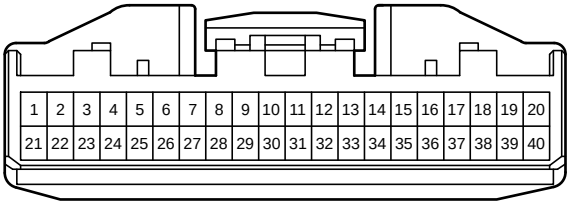

90980-12557

O22
Black

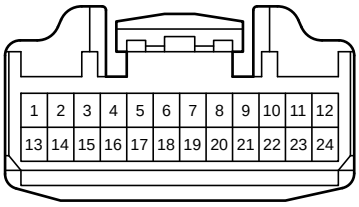

90980-12554

O104
White

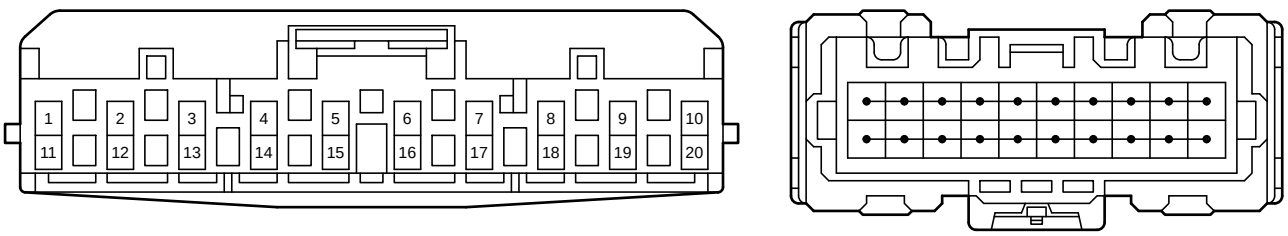

90980-12A58

O105
White

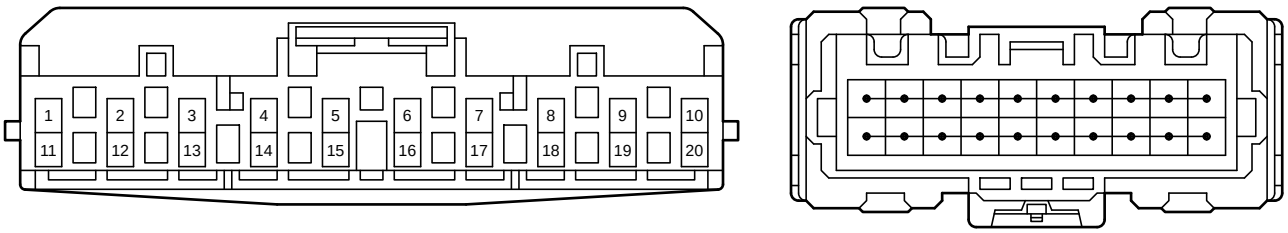

90980-12A58

O107
Black

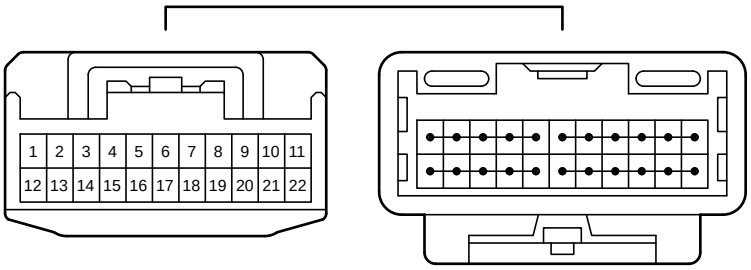

90980-12372

U5
White

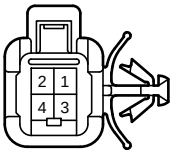

90980-11399

U6
White

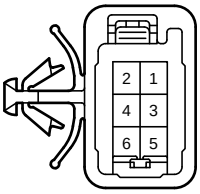

90980-11587

U7
Gray

90980-11148

U41
White

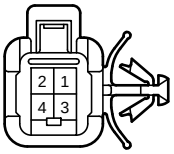

90980-11399

U42
White

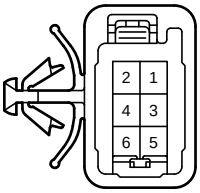

90980-11587

U43
Gray

90980-11148

U54
Black

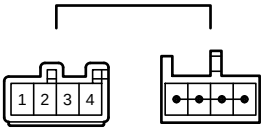

90980-11398

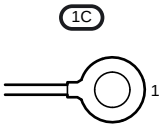

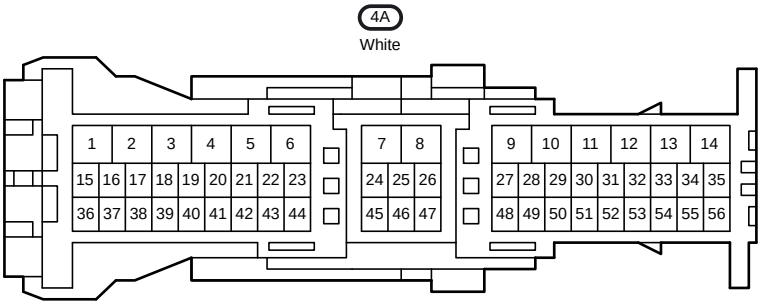

90980-12943

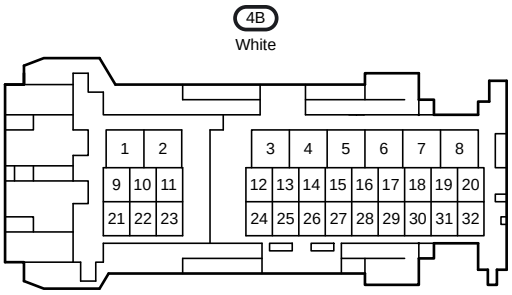

90980-12A48

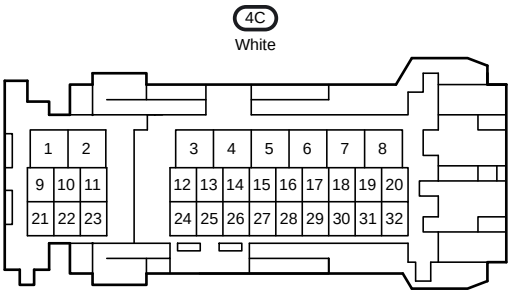

90980-12A47

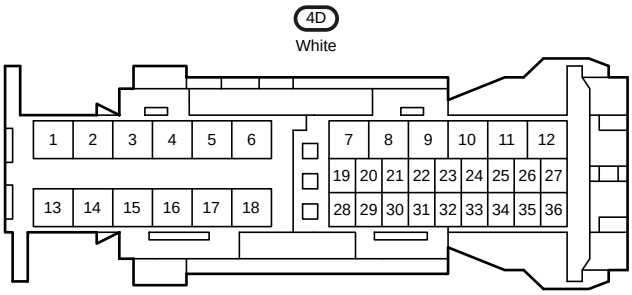

90980-12944

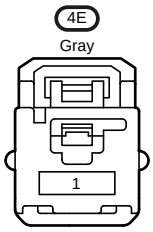

90980-12756

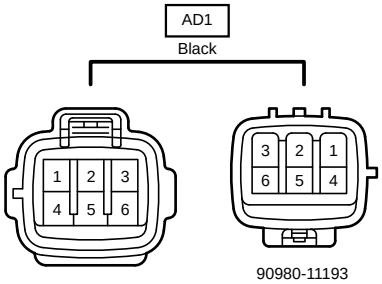

90980-11194

90980-11193

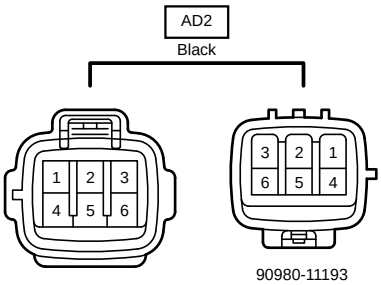

90980-11194

90980-11193

OA1
White

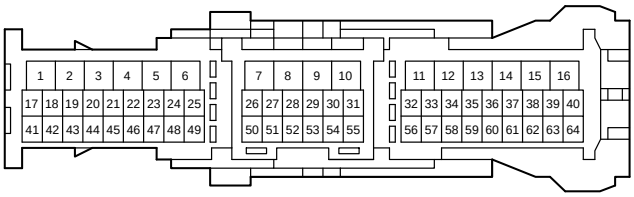

90980-12774

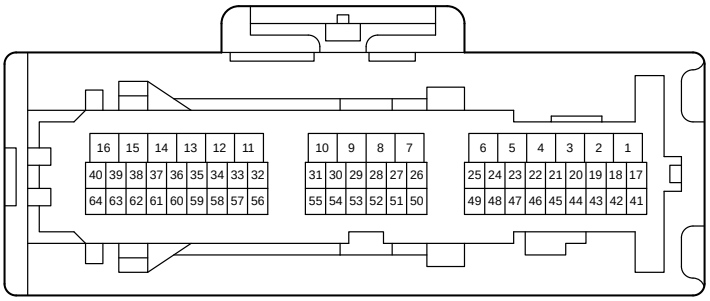

90980-12798

OA3
White

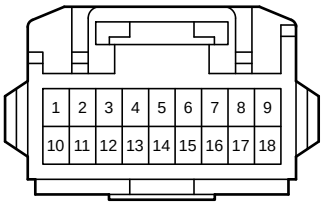

82824-53070

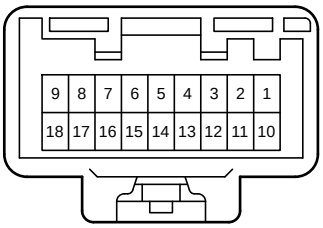

82824-53060