(Cont. next page)

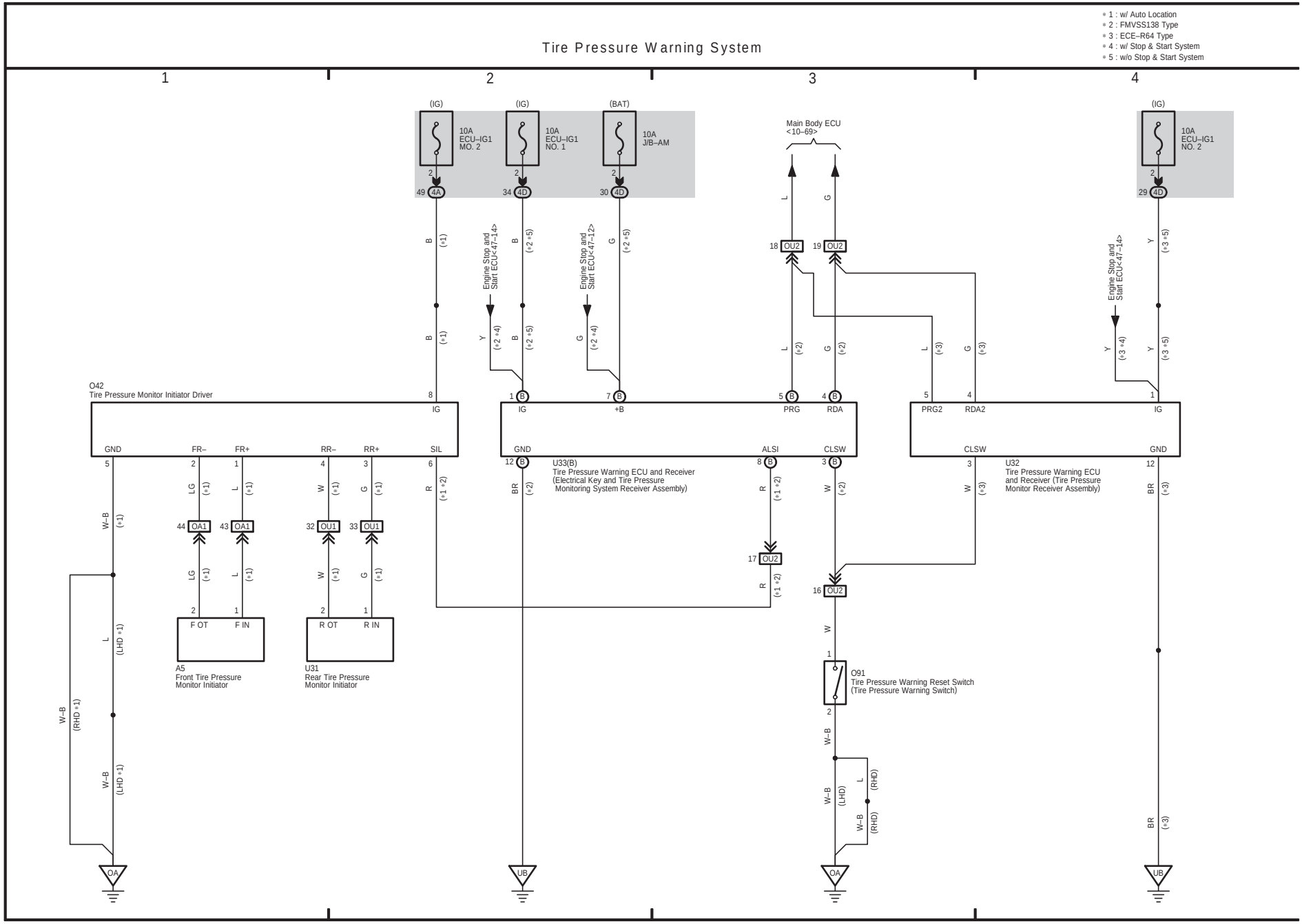

Tire Pressure Warning System
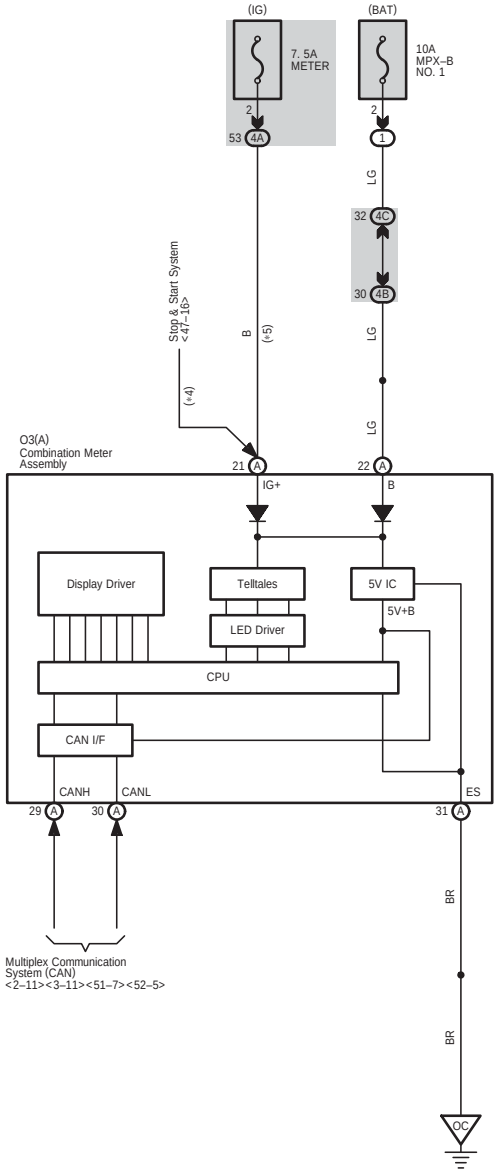
* 4 : w/ Stop & Start System
* 5 : w/o Stop & Start System