(Cont. next page)

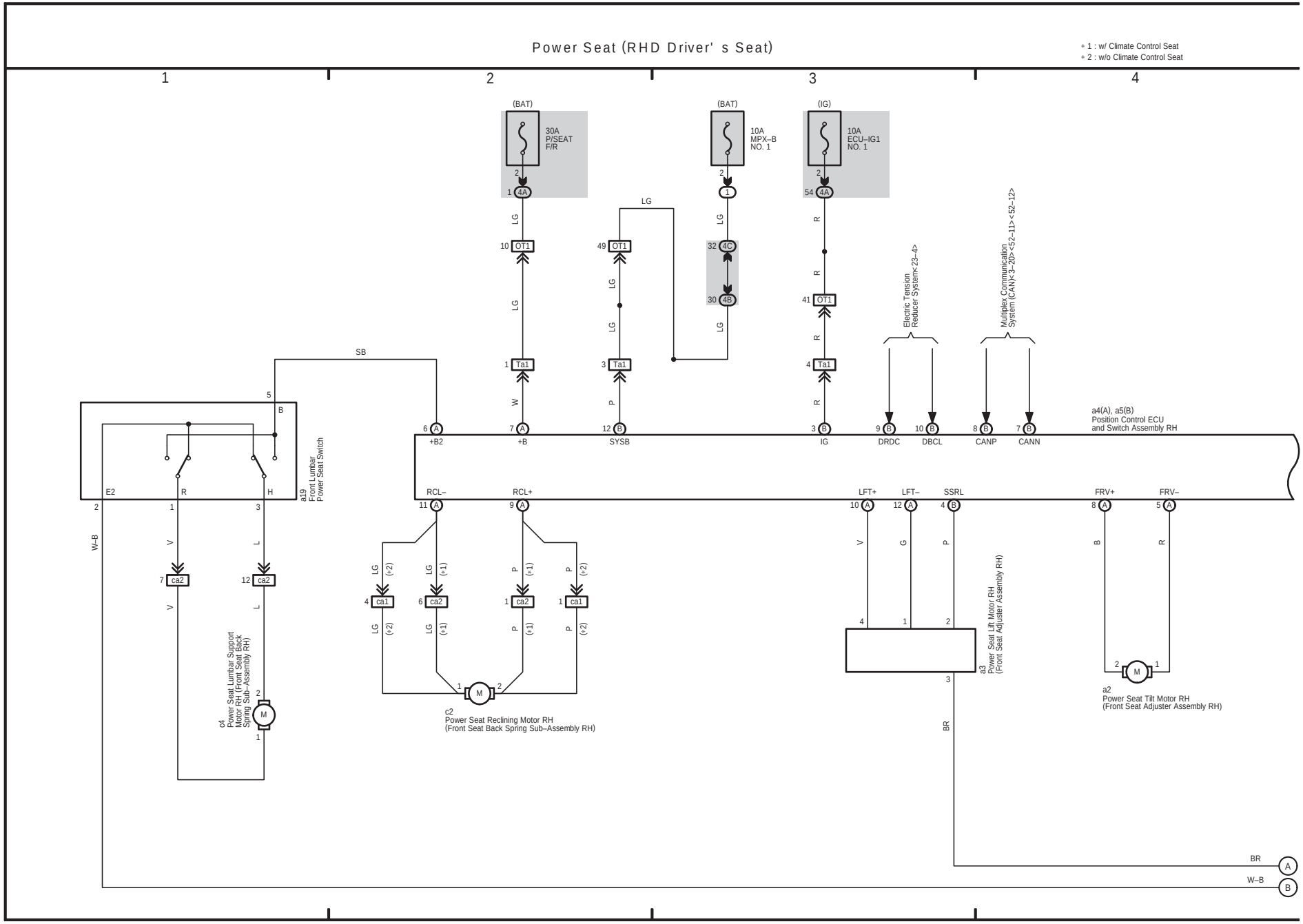

Power Seat (RHD Driver' s Seat)
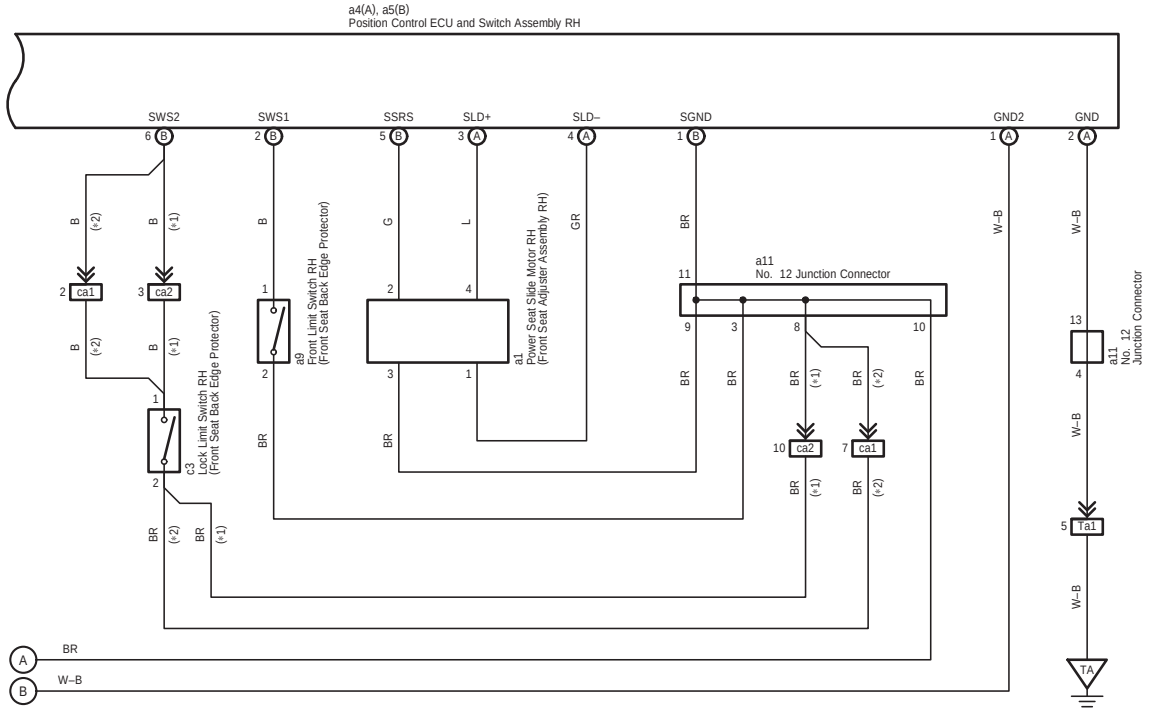
* 1 : w/ Climate Control Seat
* 2 : w/o Climate Control Seat