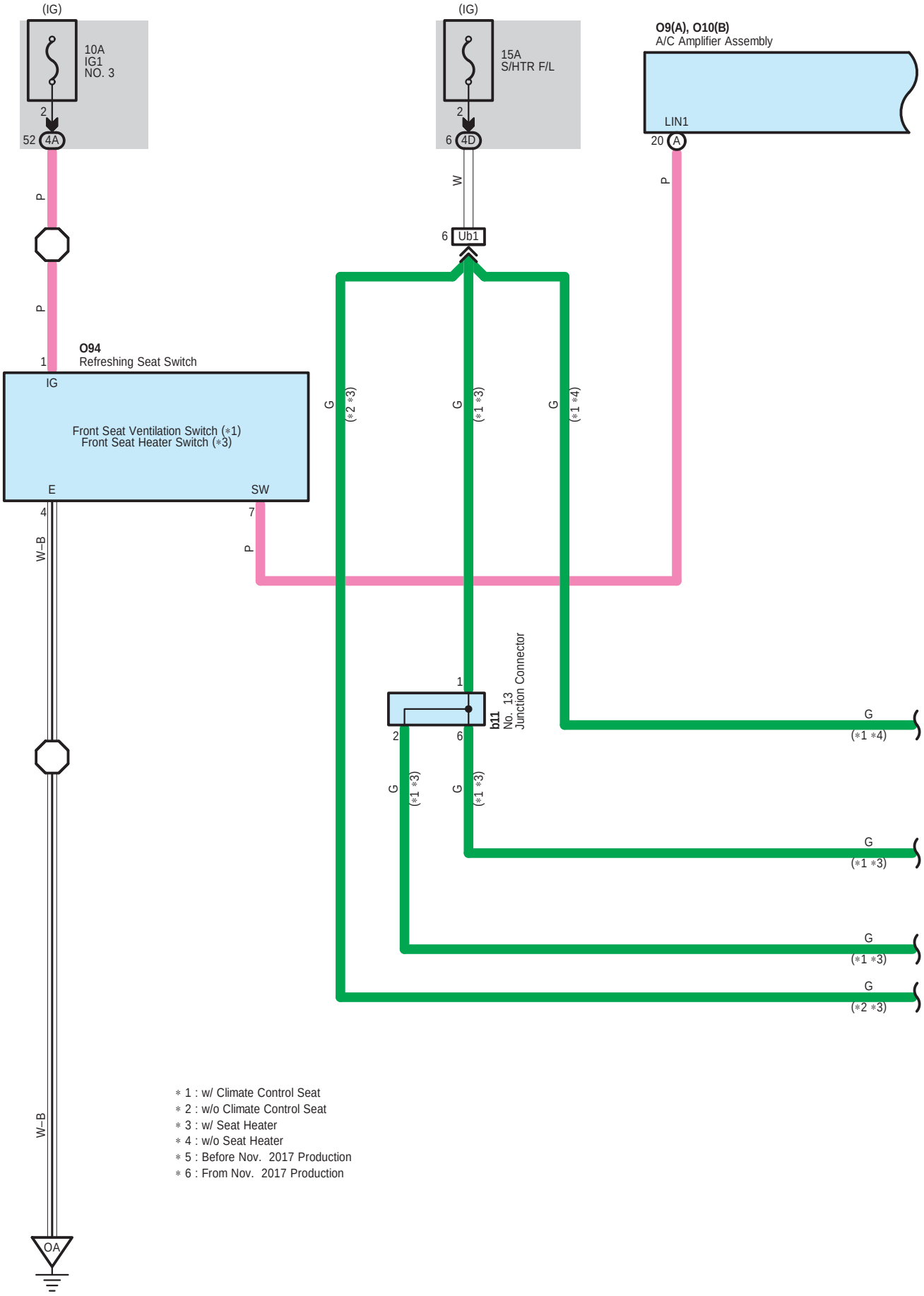

* 1 : w/ Climate Control Seat
* 2 : w/o Climate Control Seat
* 3 : w/ Seat Heater
* 4 : w/o Seat Heater
* 5 : Before Nov. 2017 Production
* 6 : From Nov. 2017 Production

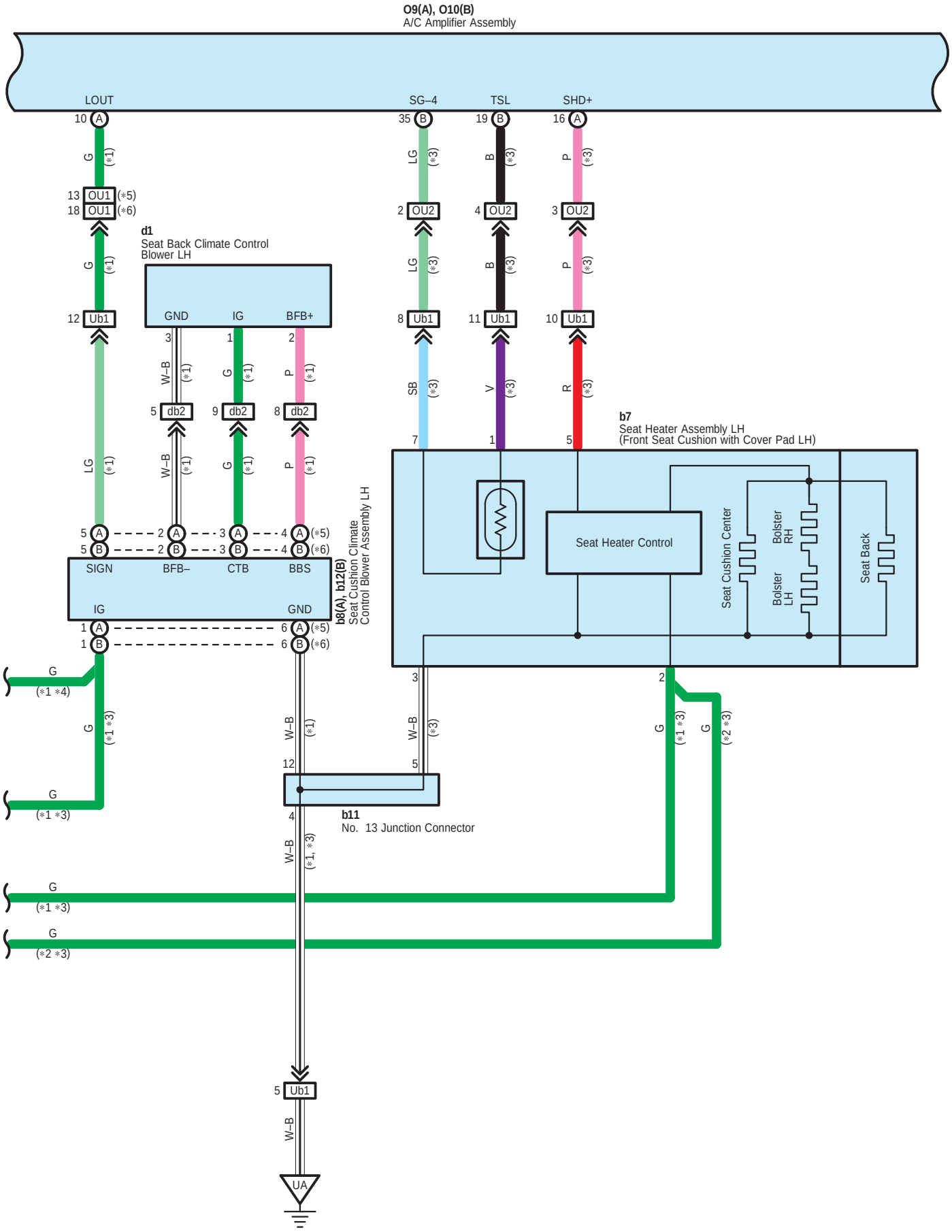
O9(A), O10(B)
A/C Amplifier Assembly
LOUT
SG–4
TSL
SHD+
d1
Seat Back Climate Control Blower LH
GND
IG
BFB+
db2
Ub1
OU1
OU2
b7
Seat Heater Assembly LH
(Front Seat Cushion with Cover Pad LH)
Seat Heater Control
Seat Cushion Center
Bolster RH
Bolster LH
Seat Back
b8(A), b12(B)
Seat Cushion Climate Control Blower Assembly LH
SIGN
BFB–
CTB
BBS
b11
No. 13 Junction Connector
UA

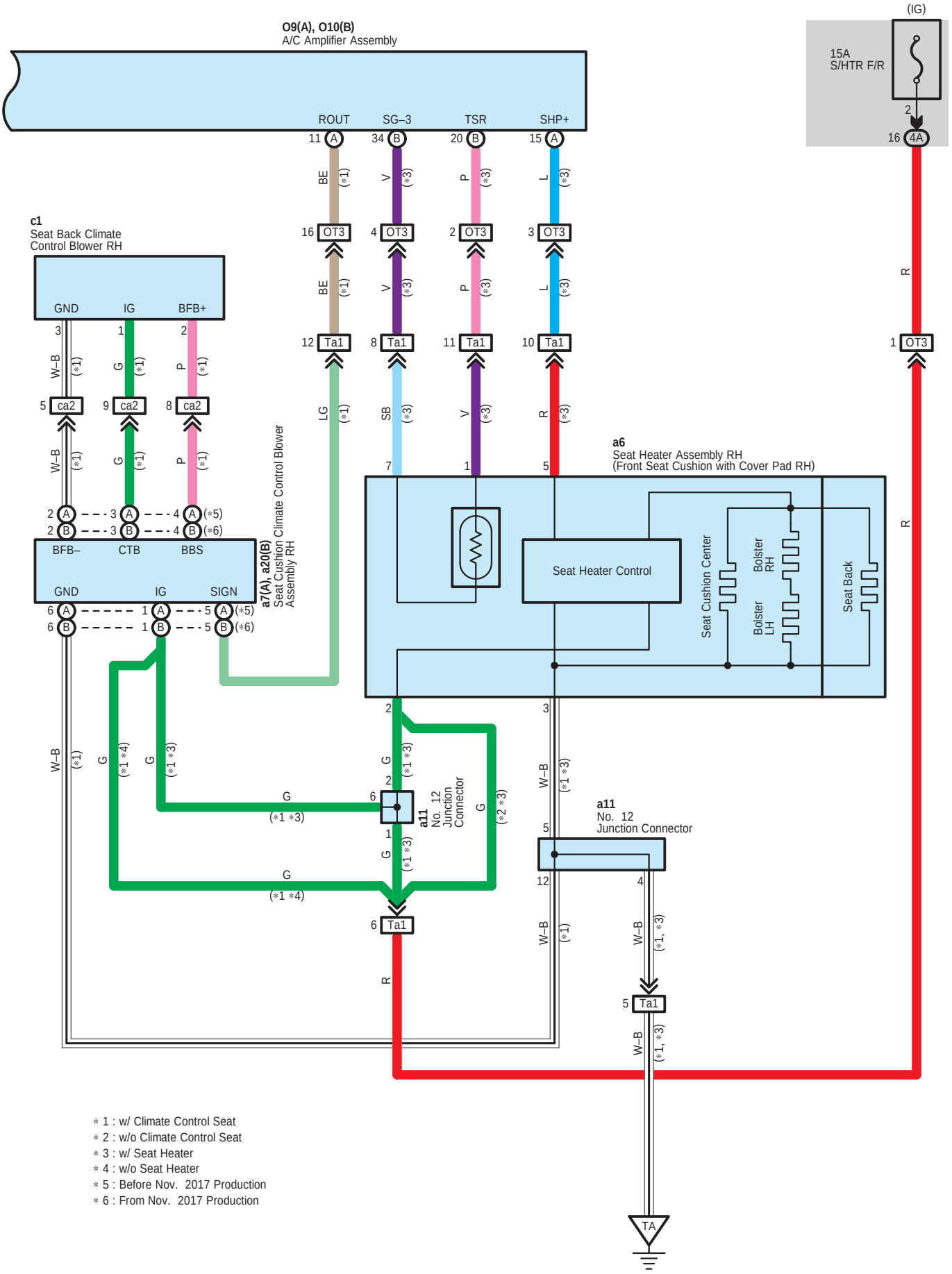

∗ 1 : w/ Climate Control Seat
∗ 2 : w/o Climate Control Seat
∗ 3 : w/ Seat Heater
∗ 4 : w/o Seat Heater
∗ 5 : Before Nov. 2017 Production
∗ 6 : From Nov. 2017 Production

O9
White

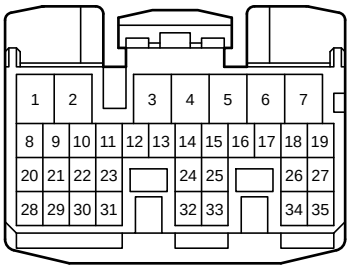

90980-12528

O10
White

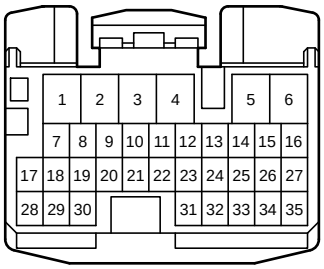

90980-12529

O94
Black

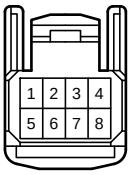

90980-12551

a6
White

90980-11528

a7
White

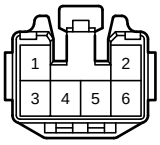

90980-12180

a11
White

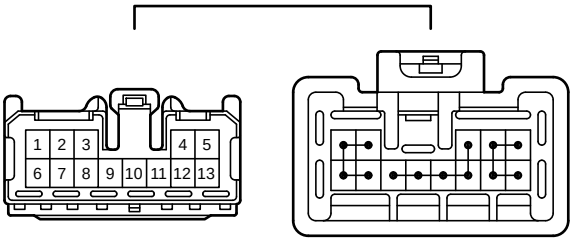

90980-12346

a20
White

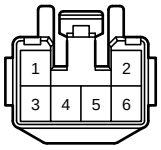

90980-12344

b7
White

90980-11528

b8
White

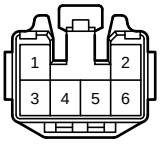

90980-12180

b11
White

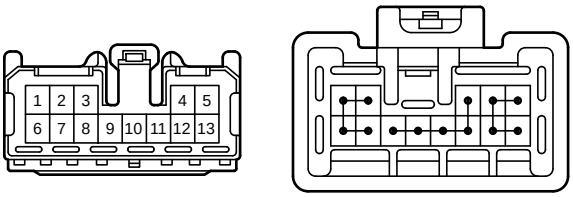

90980-12346

b12
White

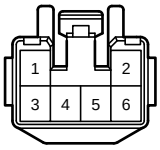

90980-12344

c1
Black

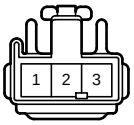

90980-10908

d1
Black

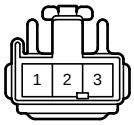

90980-10908

4A
White

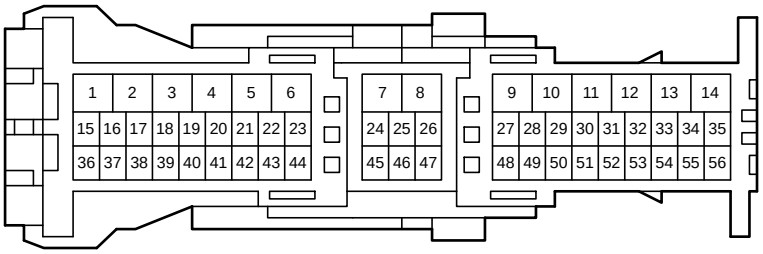

90980-12943

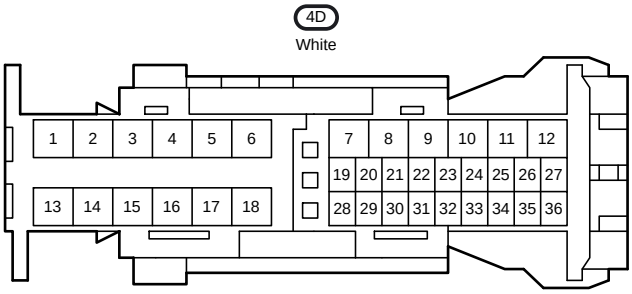

90980-12944

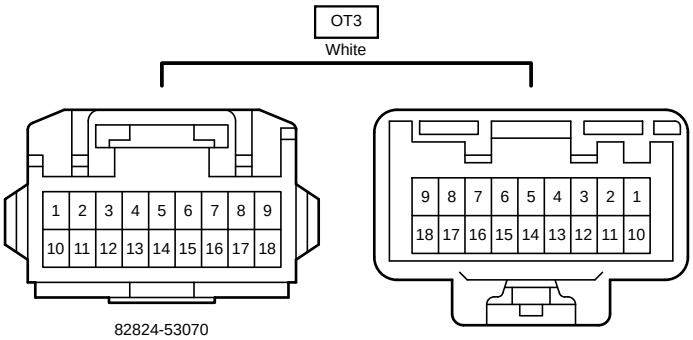

82824-53070

82824-53060

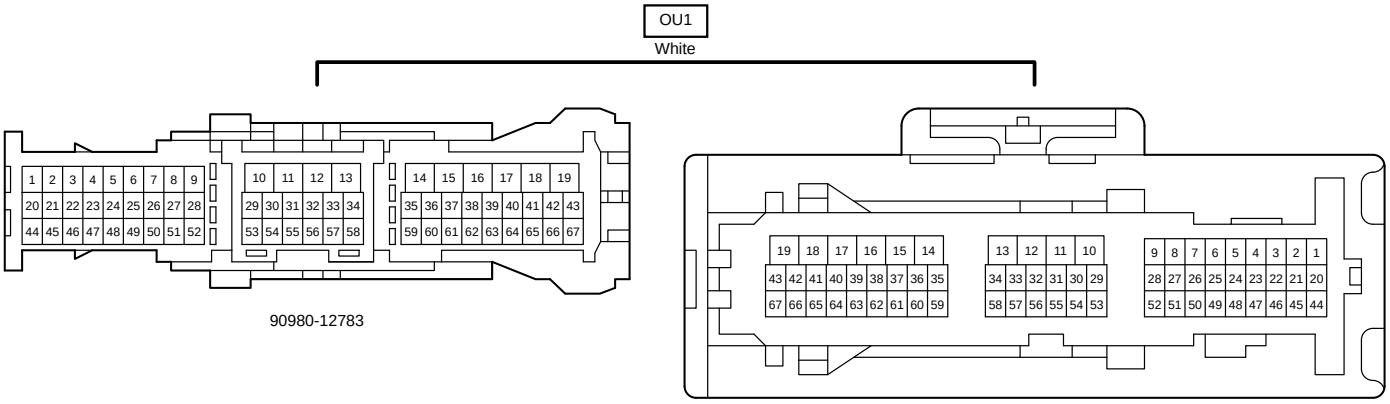

90980-12783

90980-12800

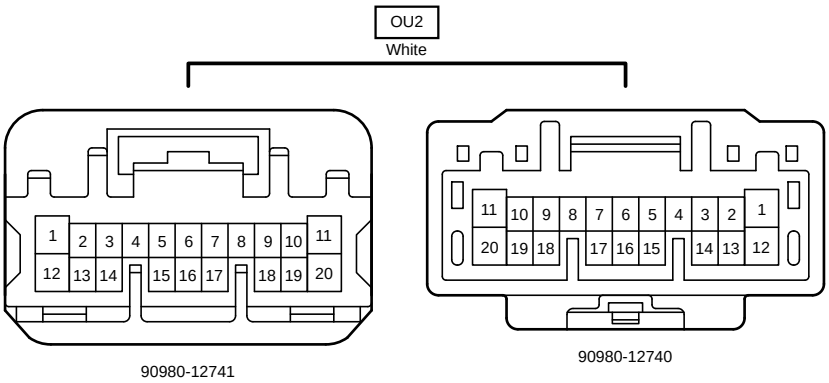

90980-12741

90980-12740

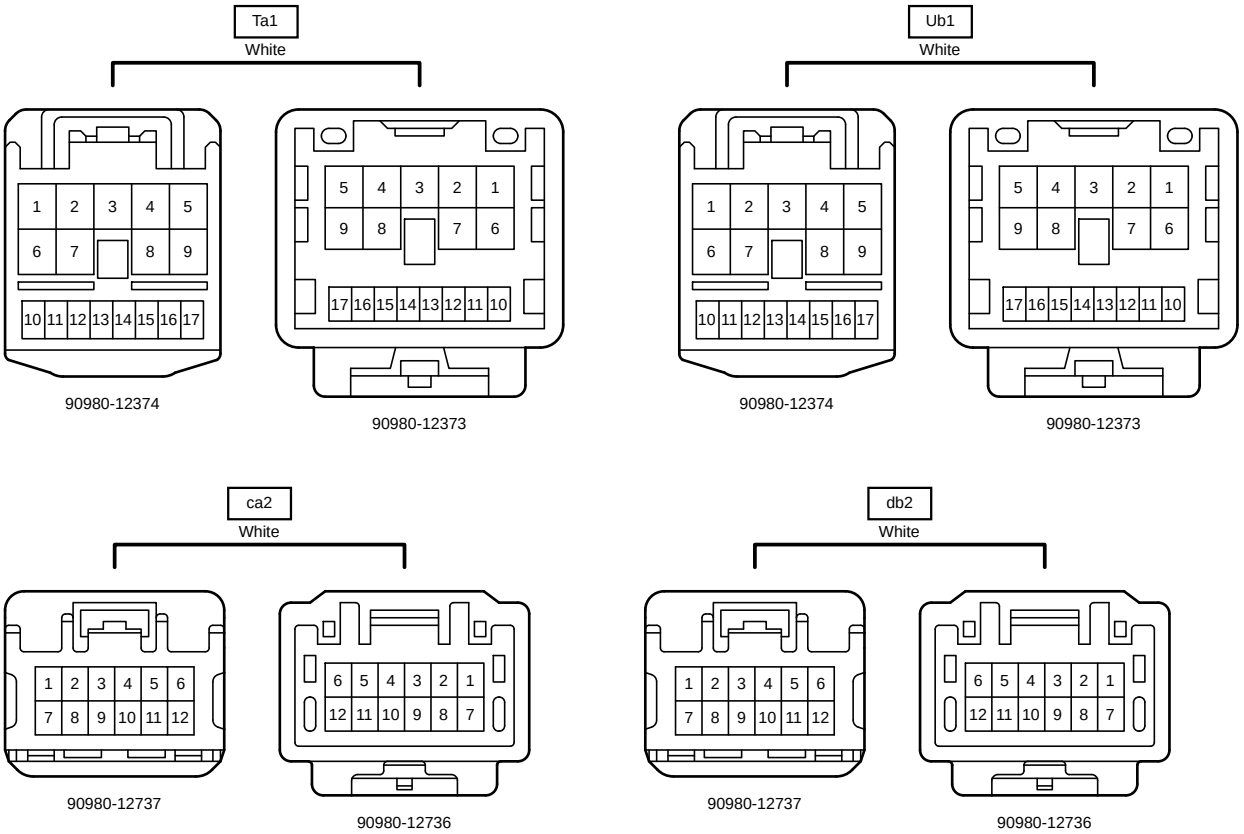
Ta1
White
1 2 3 4 5
6 7 8 9
10 11 12 13 14 15 16 17
90980-12374
5 4 3 2 1
9 8 7 6
17 16 15 14 13 12 11 10
90980-12373
Ub1
White
1 2 3 4 5
6 7 8 9
10 11 12 13 14 15 16 17
90980-12374
5 4 3 2 1
9 8 7 6
17 16 15 14 13 12 11 10
90980-12373
ca2
White
1 2 3 4 5 6
7 8 9 10 11 12
90980-12737
6 5 4 3 2 1
12 11 10 9 8 7
90980-12736
db2
White
1 2 3 4 5 6
7 8 9 10 11 12
90980-12737
6 5 4 3 2 1
12 11 10 9 8 7
90980-12736