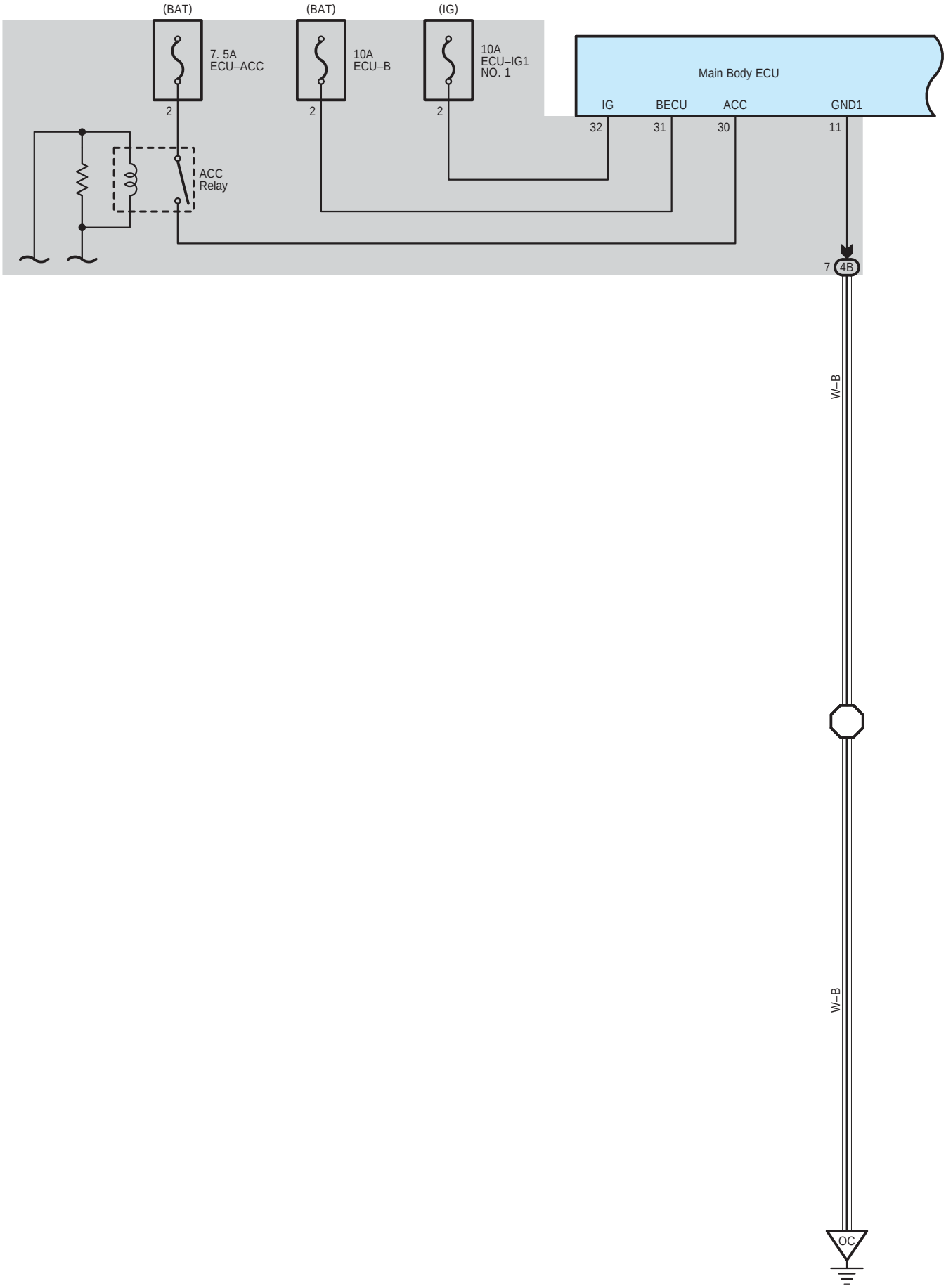
(BAT)
(BAT)
(IG)
7. 5A
ECU–ACC
10A
ECU–B
10A
ECU–IG1
NO. 1
Main Body ECU
IG
BECU
ACC
GND1
32
31
30
11
2
2
2
ACC
Relay
7
4B
W–B
W–B
OC

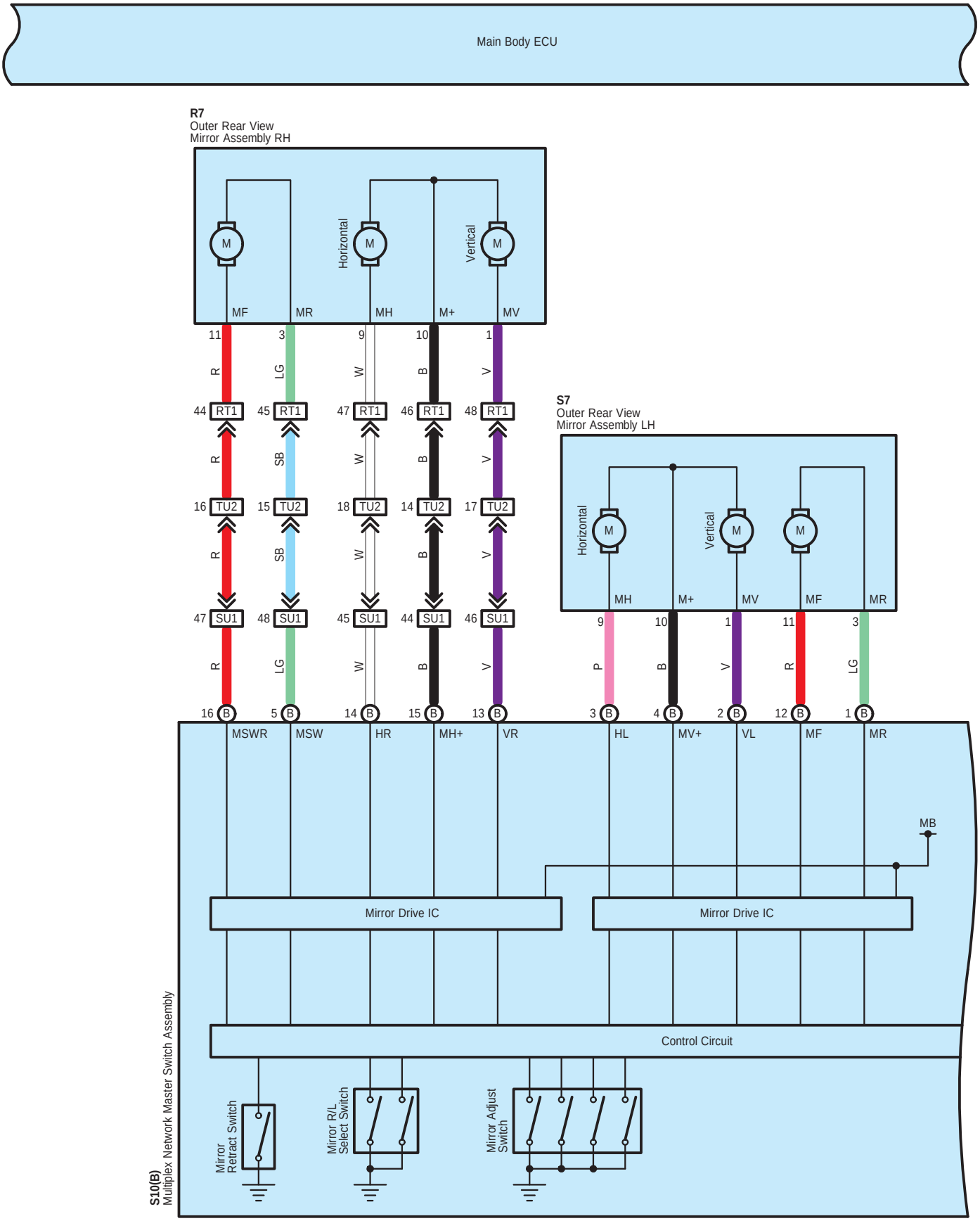
Main Body ECU
R7
Outer Rear View
Mirror Assembly RH
Horizontal
Vertical
M
MF
MR
MH
M+
MV
11
3
9
10
1
R
LG
W
B
V
44 RT1
45 RT1
47 RT1
46 RT1
48 RT1
SB
16 TU2
15 TU2
18 TU2
14 TU2
17 TU2
47 SU1
48 SU1
45 SU1
44 SU1
46 SU1
16 B
5 B
14 B
15 B
13 B
MSWR
MSW
HR
MH+
VR
S7
Outer Rear View
Mirror Assembly LH
P
3 B
4 B
2 B
12 B
1 B
HL
MV+
VL
MB
Mirror Drive IC
Mirror Drive IC
Control Circuit
Mirror Retract Switch
Mirror R/L Select Switch
Mirror Adjust Switch
S10(B)
Multiplex Network Master Switch Assembly

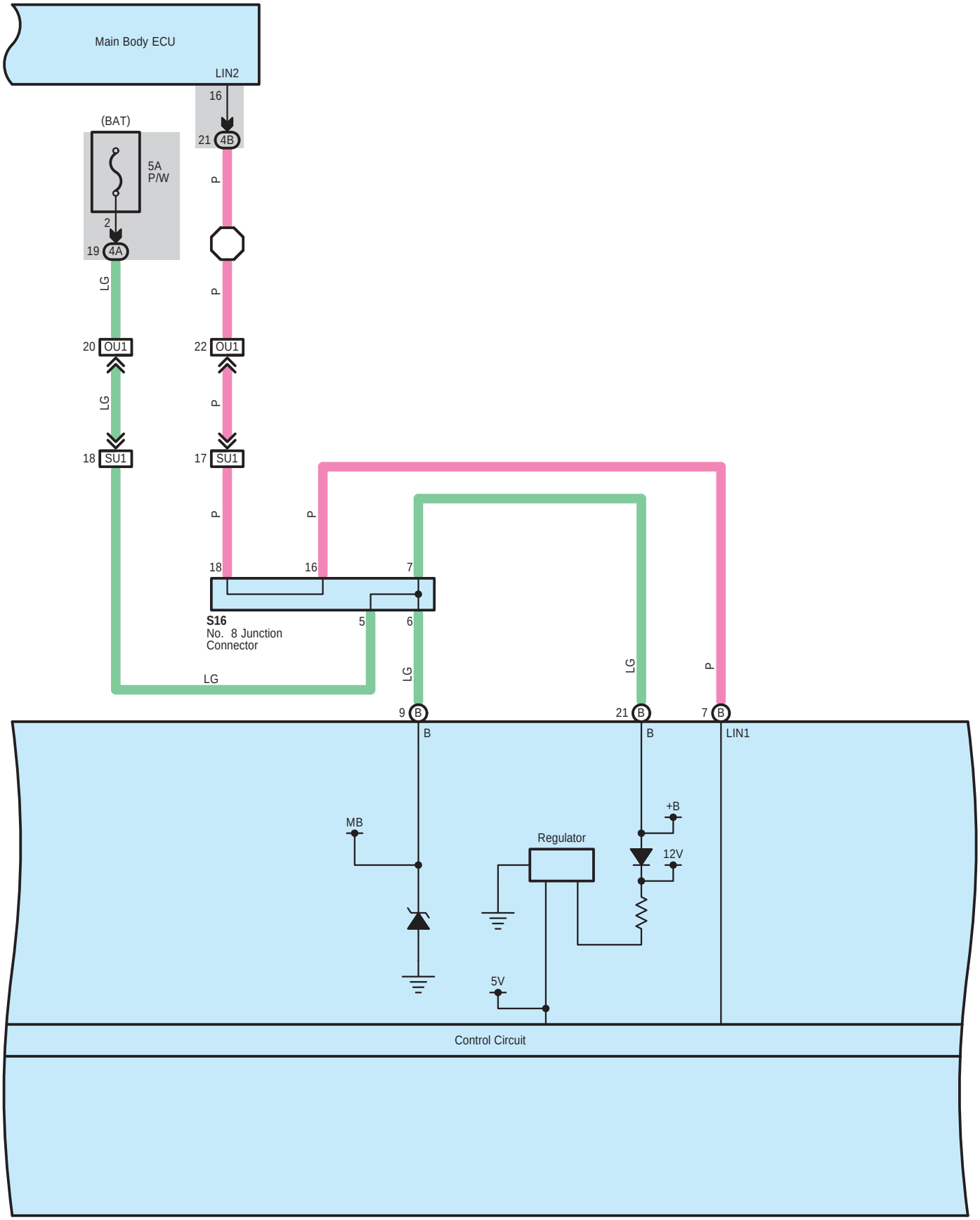

S10(B)
Multiplex Network Master Switch Assembly

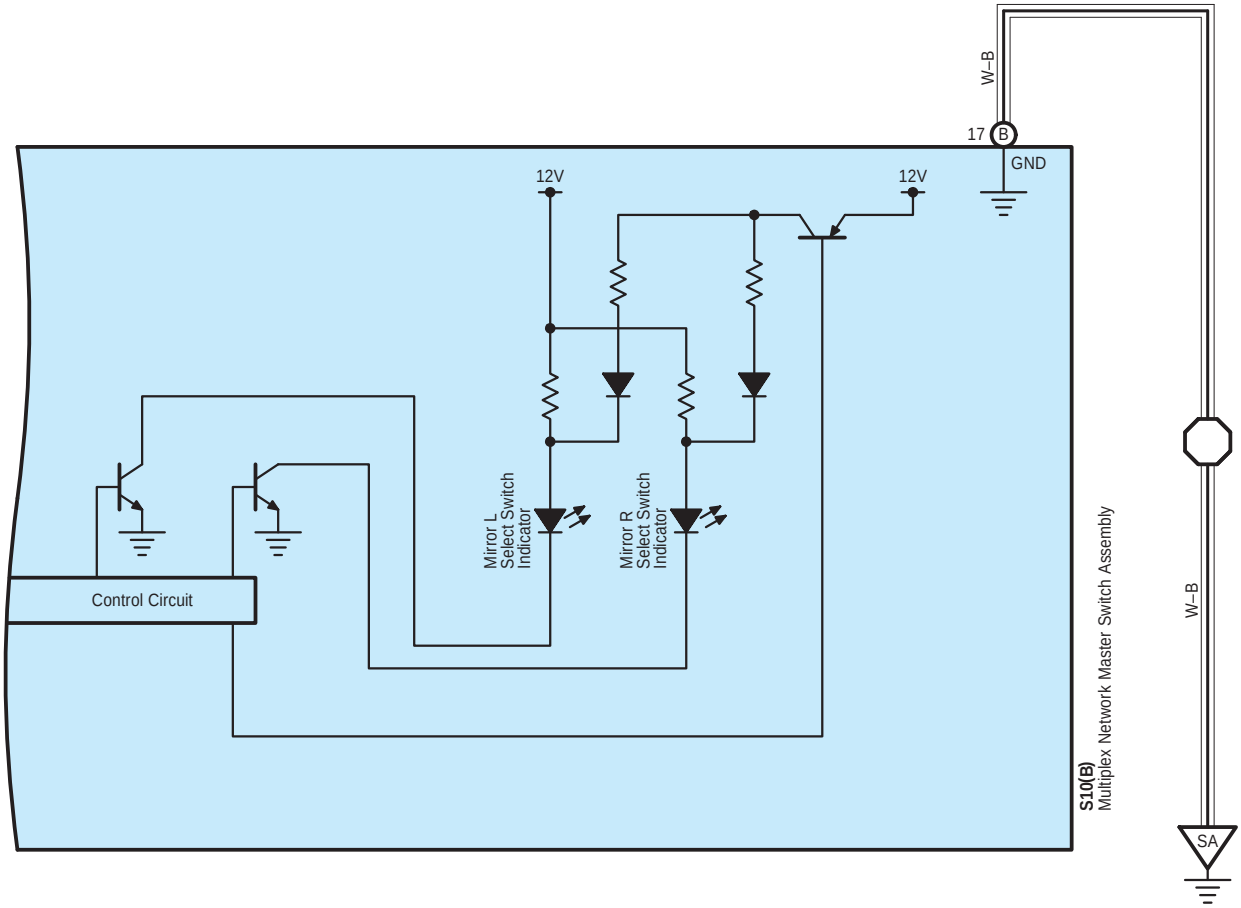
W–B
17
B
GND
12V
12V
Mirror L
Select Switch
Indicator
Mirror R
Select Switch
Indicator
Control Circuit
S10(B)
Multiplex Network Master Switch Assembly
W–B
SA

R7
White

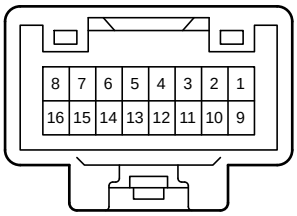

90980-12192

S7
White

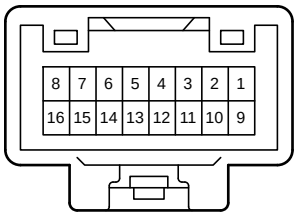

90980-12192

S10
Black

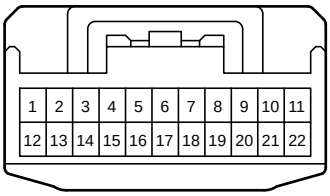

90980-12372

S16
White

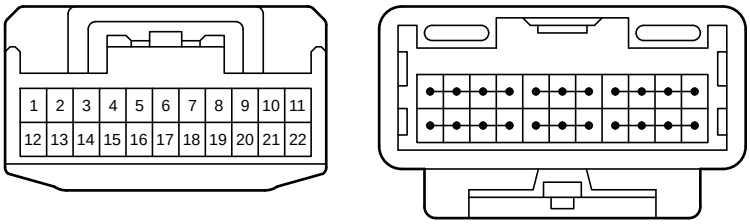

90980-12372

4A
White

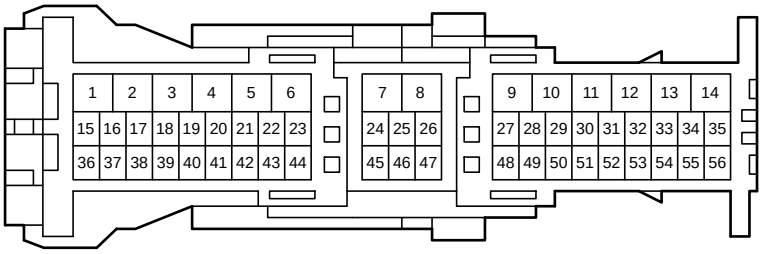

90980-12943

4B
White

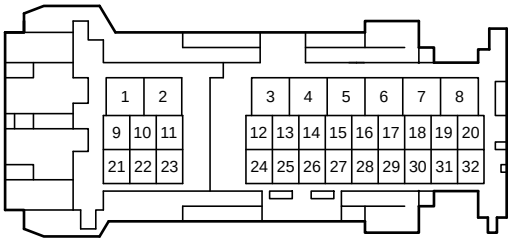

90980-12A48

OU1
White

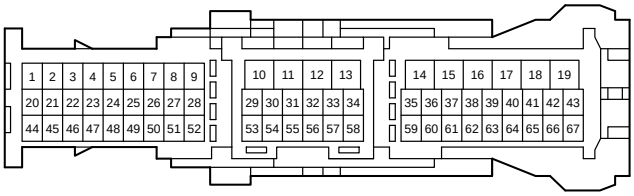

90980-12783

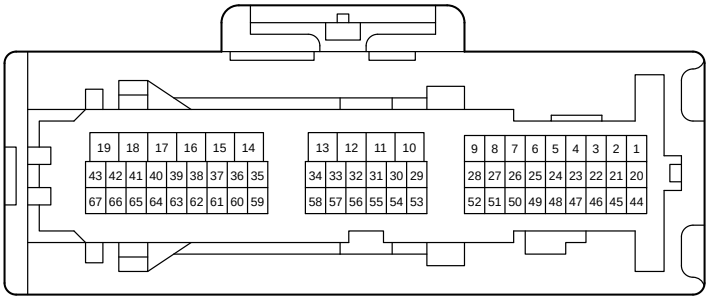

90980-12800

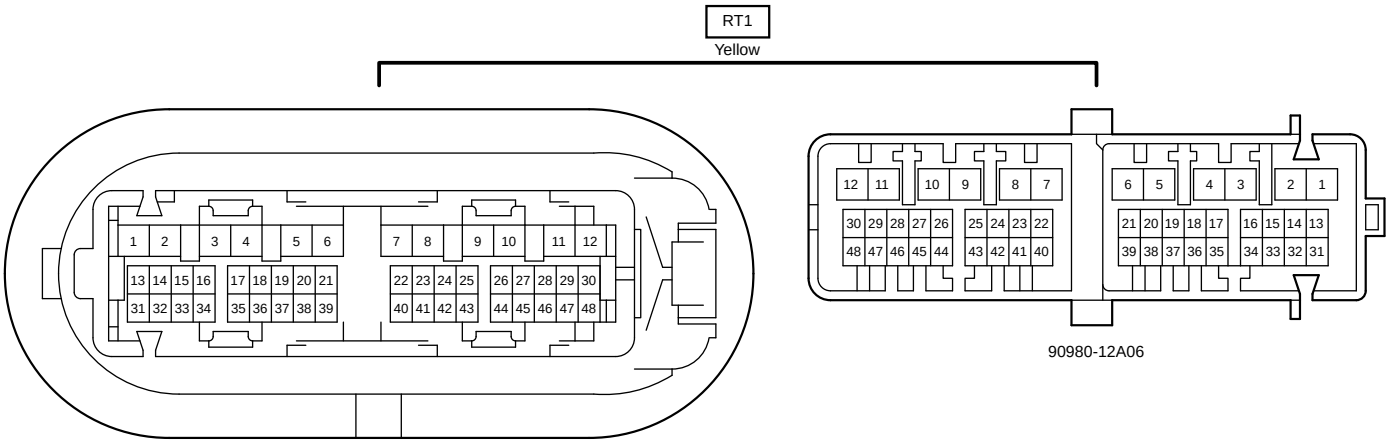
RT1
Yellow
90980-12A09
90980-12A06

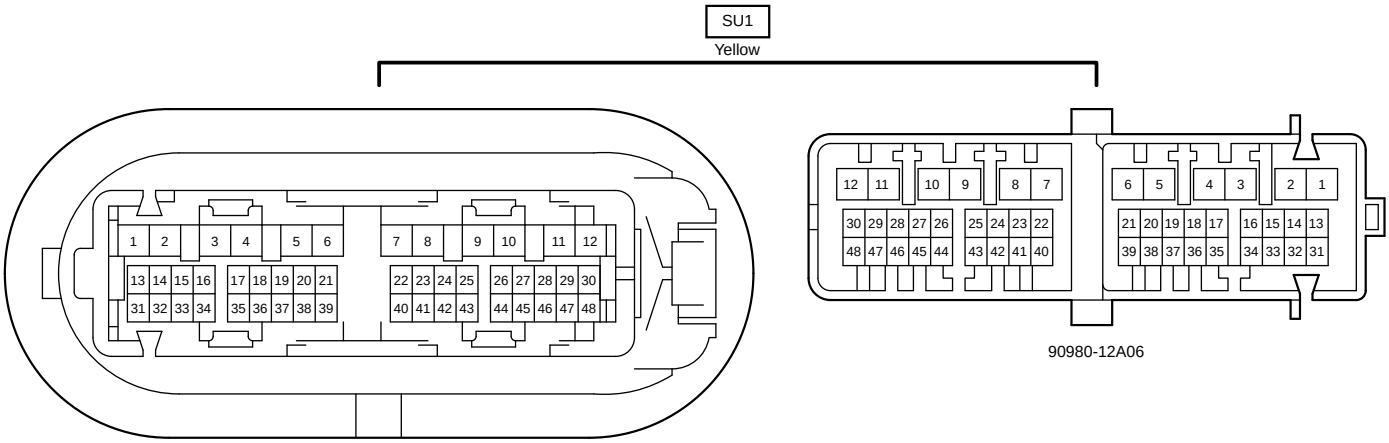
SU1
Yellow
90980-12A09
90980-12A06

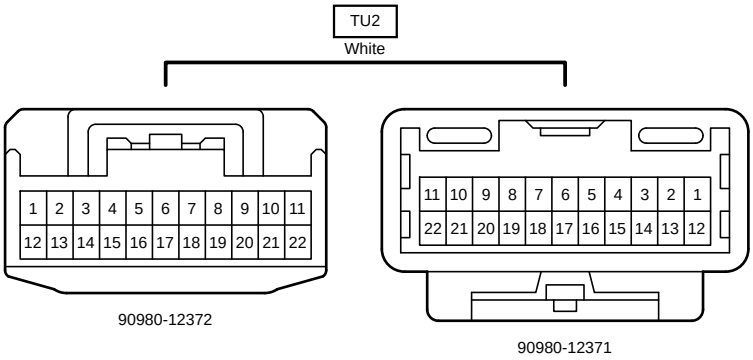
TU2
White
90980-12372
90980-12371