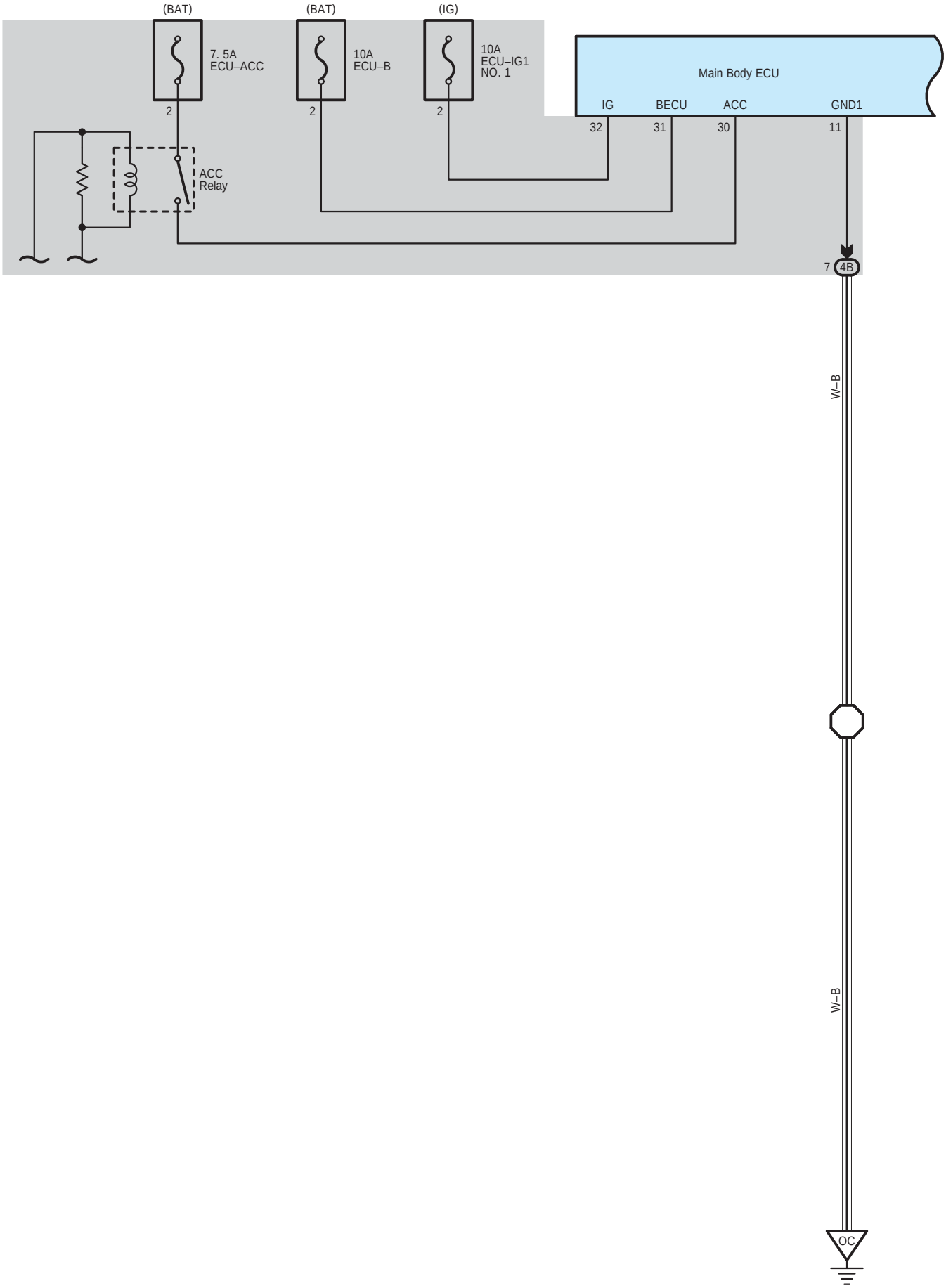
(BAT)
(BAT)
(IG)
7. 5A
ECU–ACC
10A
ECU–B
10A
ECU–IG1
NO. 1
Main Body ECU
IG
BECU
ACC
GND1
32
31
30
11
2
2
2
ACC
Relay
7
4B
W–B
W–B
OC

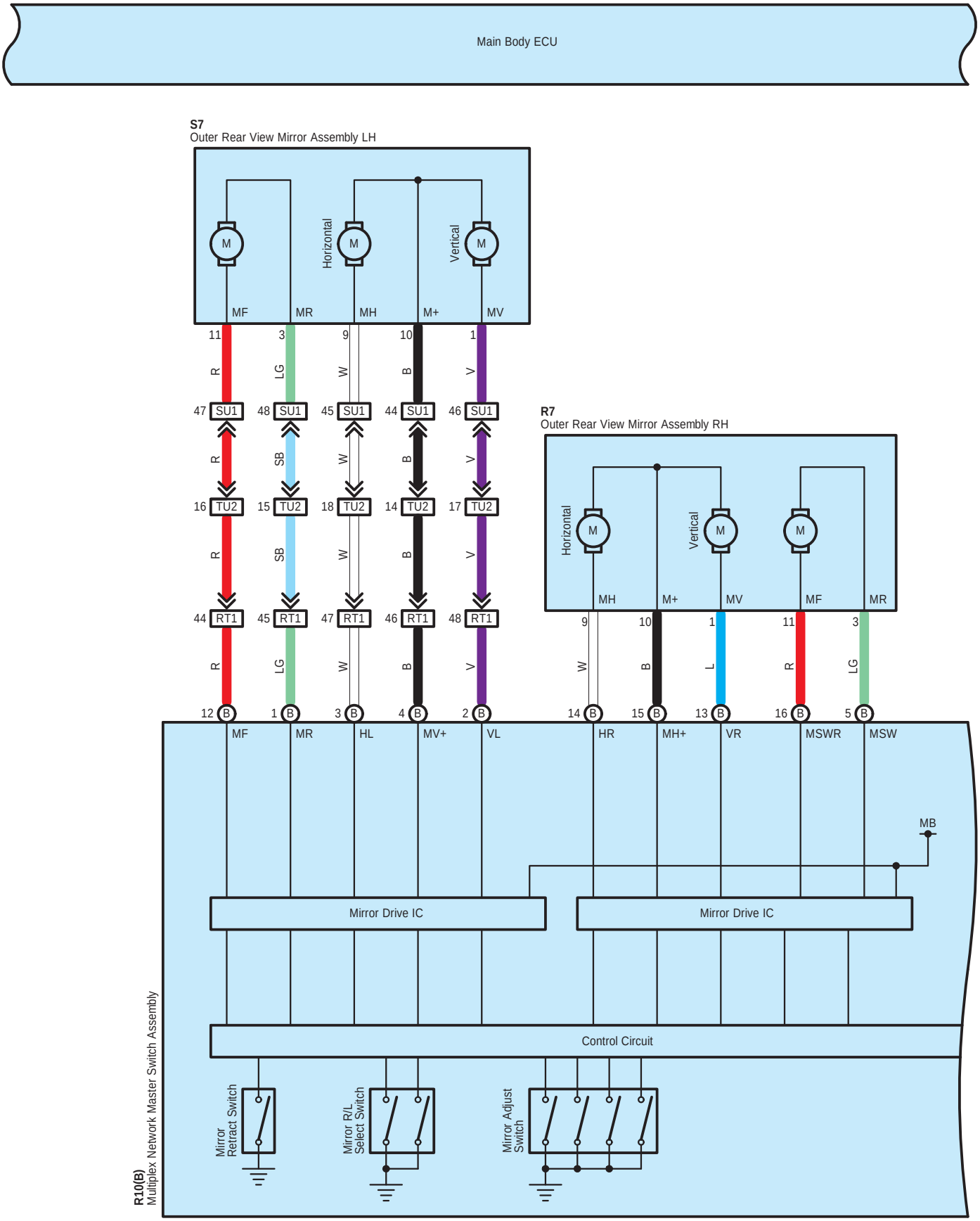
Main Body ECU
S7
Outer Rear View Mirror Assembly LH
Horizontal
Vertical
M
MF
MR
MH
M+
MV
11
3
9
10
1
R
LG
W
B
V
47 SU1
48 SU1
45 SU1
44 SU1
46 SU1
SB
16 TU2
15 TU2
18 TU2
14 TU2
17 TU2
44 RT1
45 RT1
47 RT1
46 RT1
48 RT1
12 B
1 B
3 B
4 B
2 B
MF
MR
HL
MV+
VL
R7
Outer Rear View Mirror Assembly RH
MH
M+
MV
MF
MR
9
10
1
11
3
L
14 B
15 B
13 B
16 B
5 B
HR
MH+
VR
MSWR
MSW
MB
Mirror Drive IC
Mirror Drive IC
Control Circuit
Mirror Retract Switch
Mirror R/L Select Switch
Mirror Adjust Switch
R10(B)
Multiplex Network Master Switch Assembly

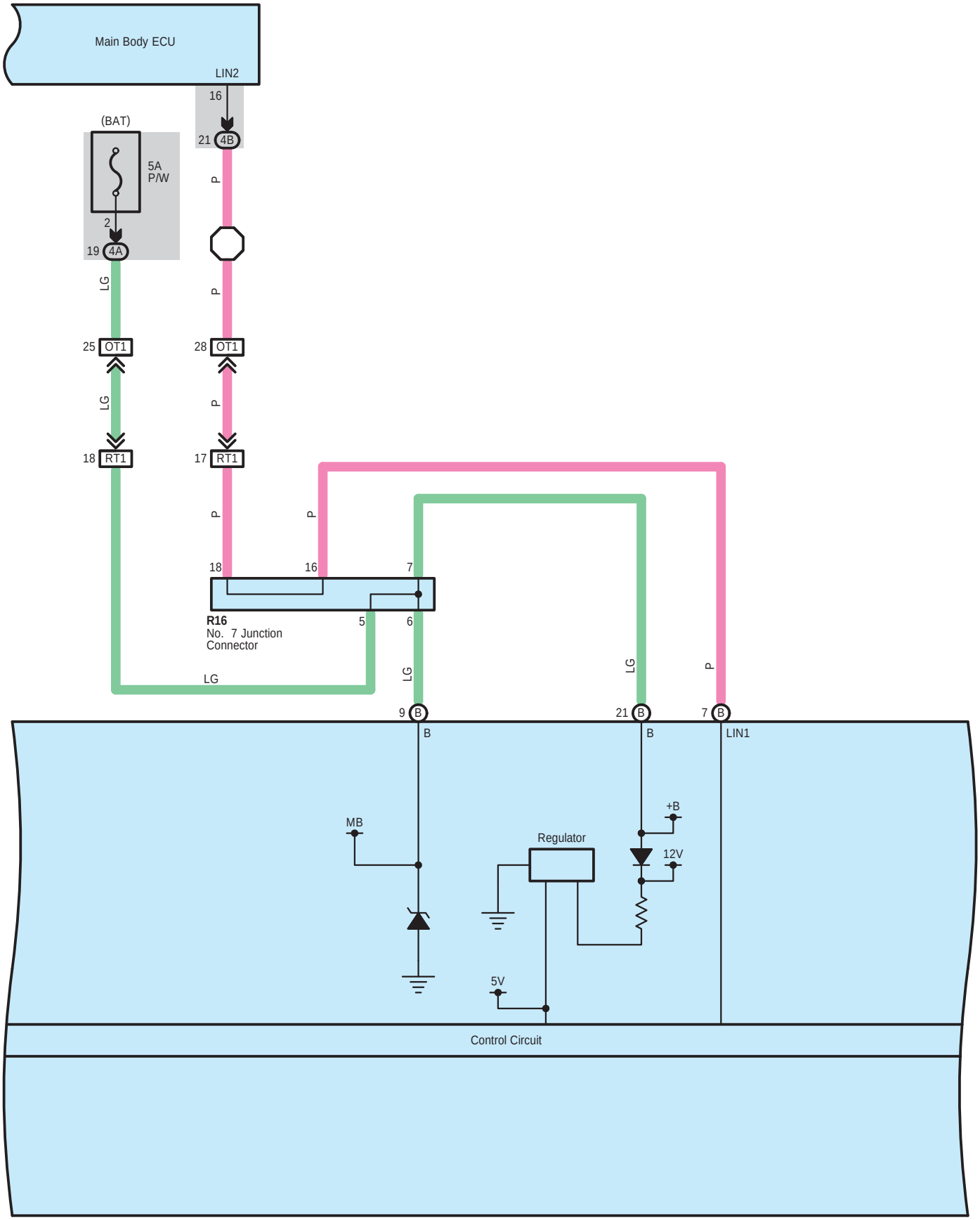

R10(B)
Multiplex Network Master Switch Assembly

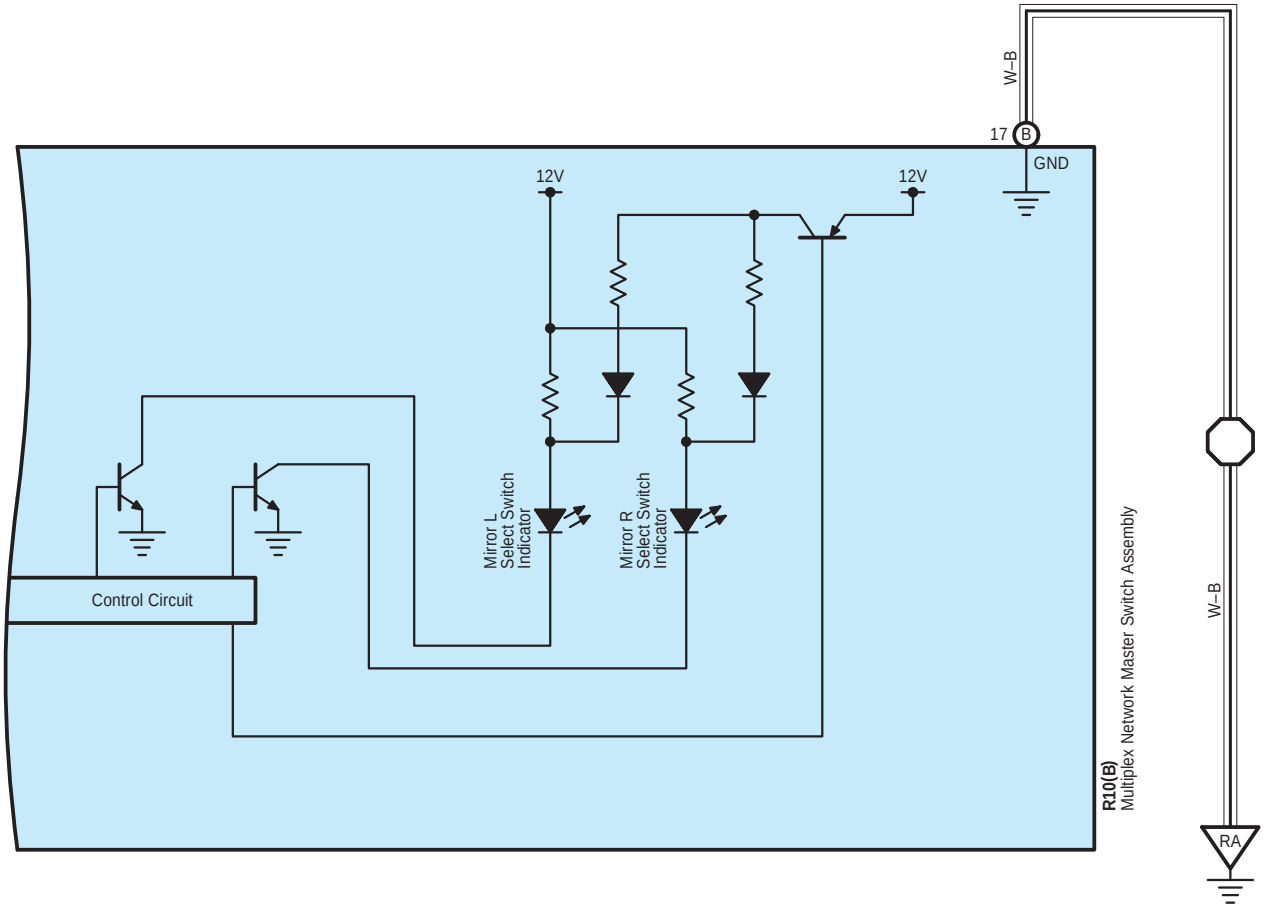
W–B
17
B
GND
12V
12V
Mirror L
Select Switch
Indicator
Mirror R
Select Switch
Indicator
Control Circuit
R10(B)
Multiplex Network Master Switch Assembly
W–B
RA

R7
White

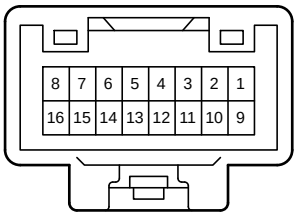

90980-12192

R10
Black

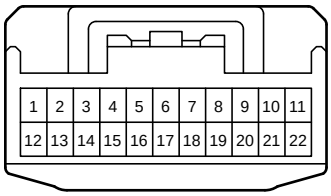

90980-12372

R16
White

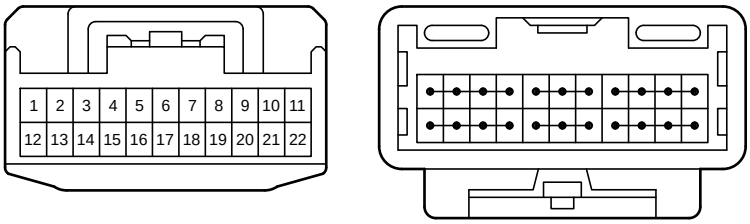

90980-12372

S7
White

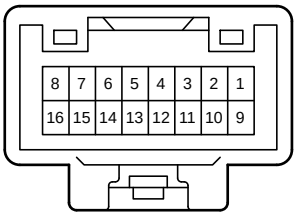

90980-12192

4A
White

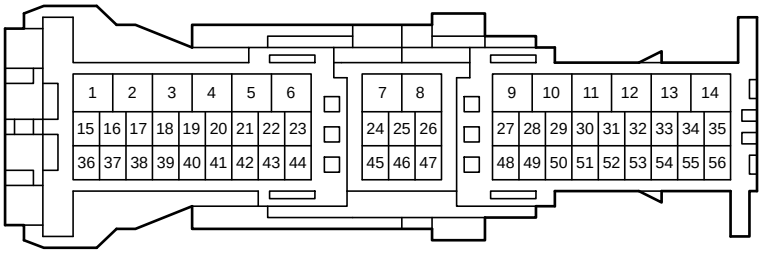

90980-12943

4B
White

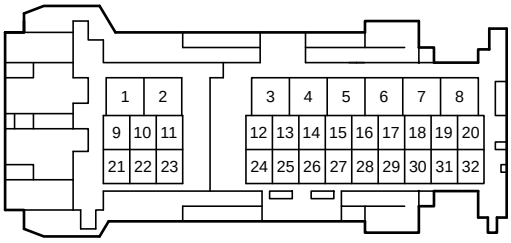

90980-12A48

OT1
White

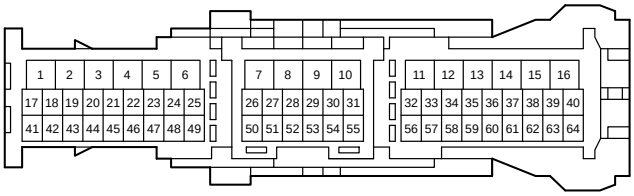

90980-12774

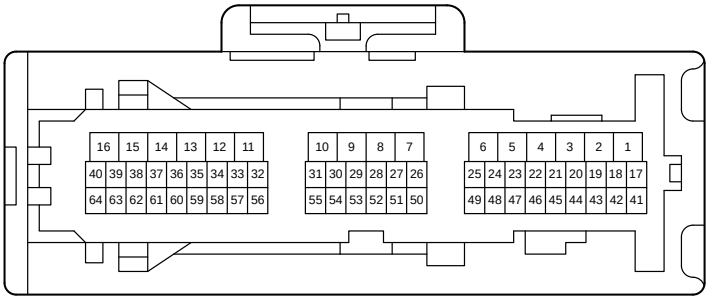

90980-12798

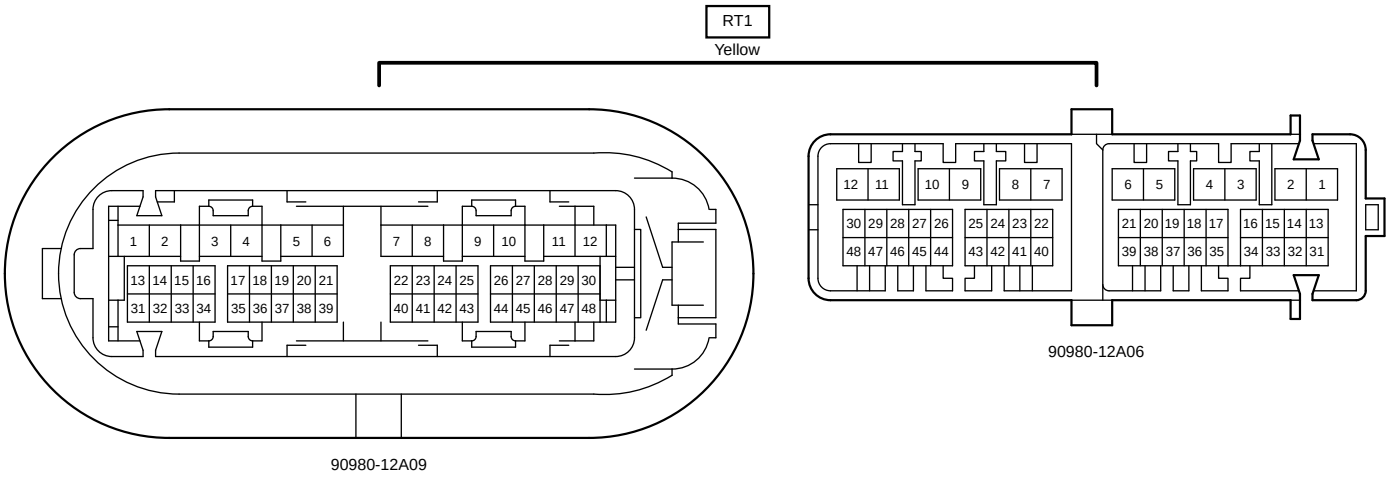
RT1
Yellow
90980-12A09
90980-12A06

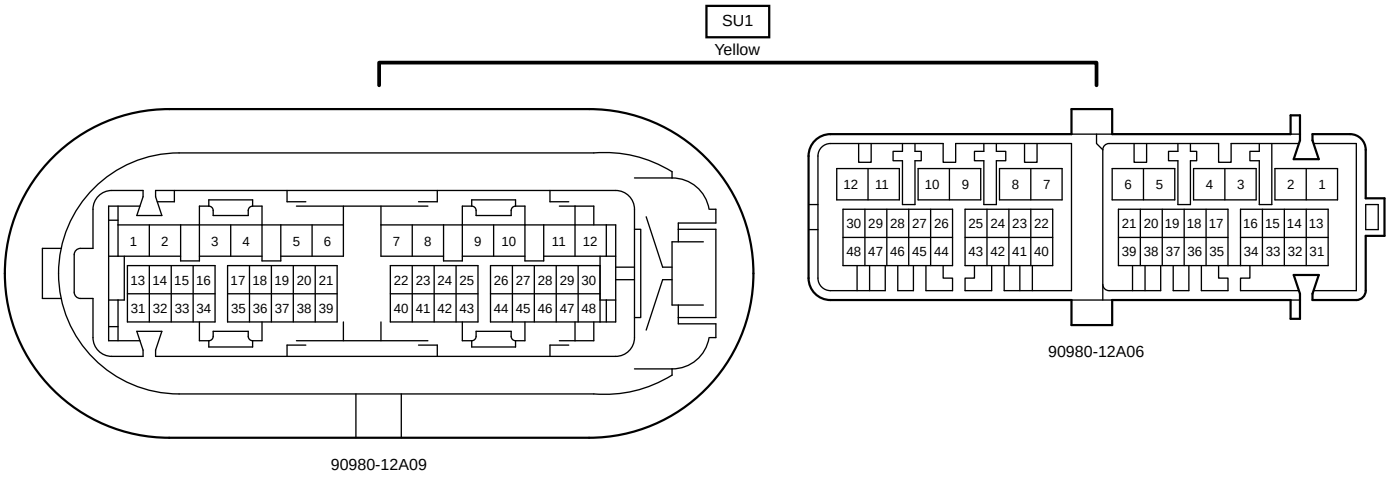
SU1
Yellow
90980-12A09
90980-12A06

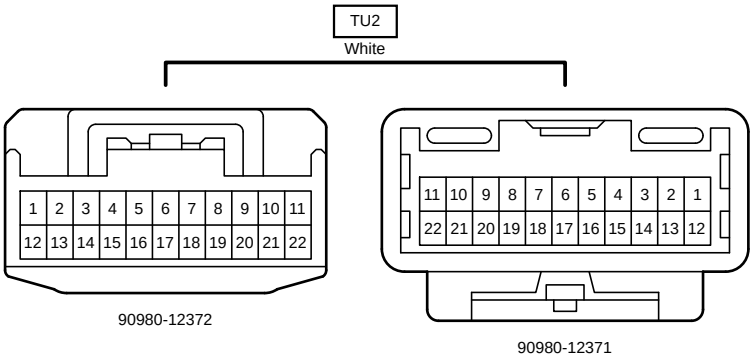
TU2
White
90980-12372
90980-12371