(Cont. next page)

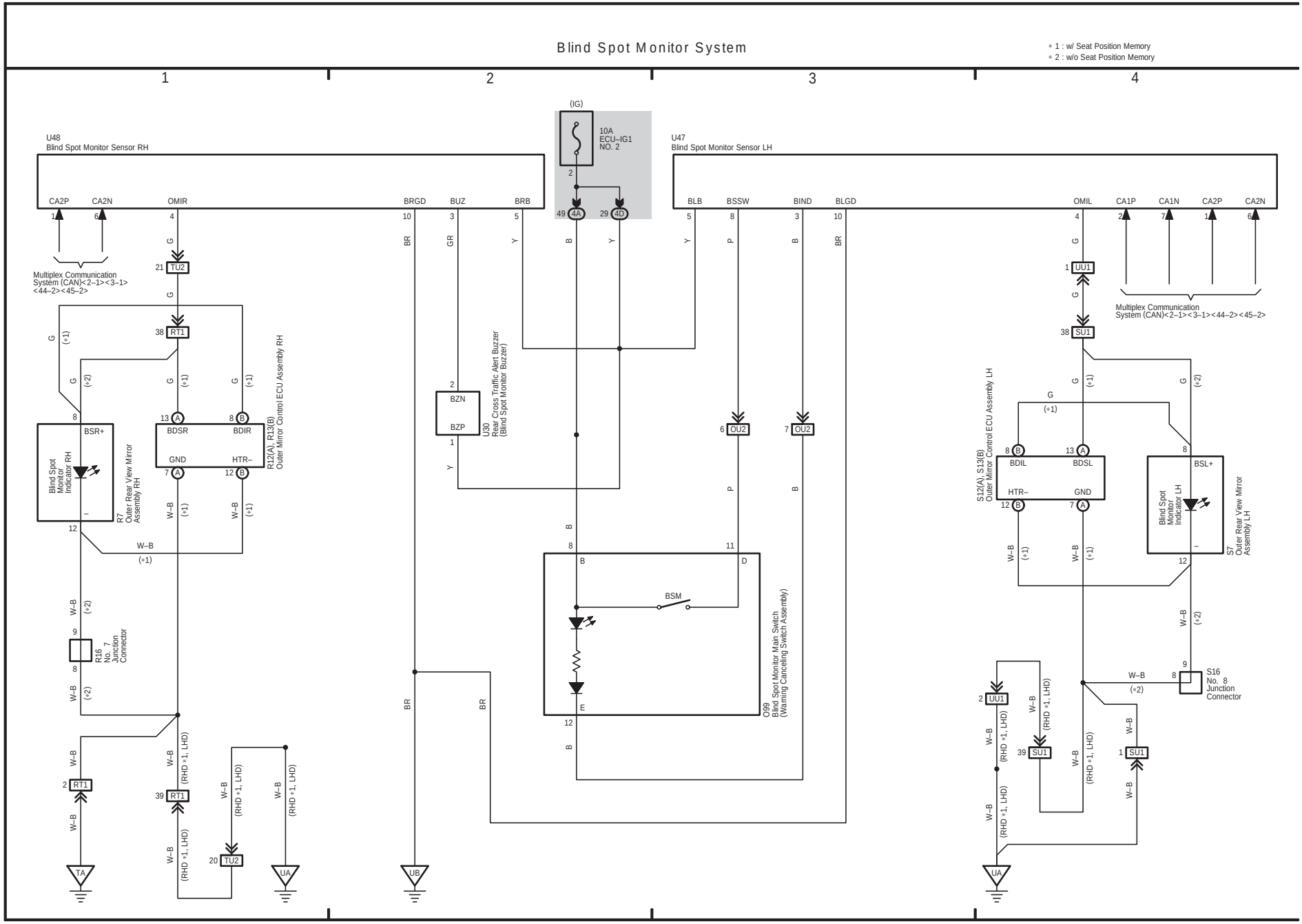
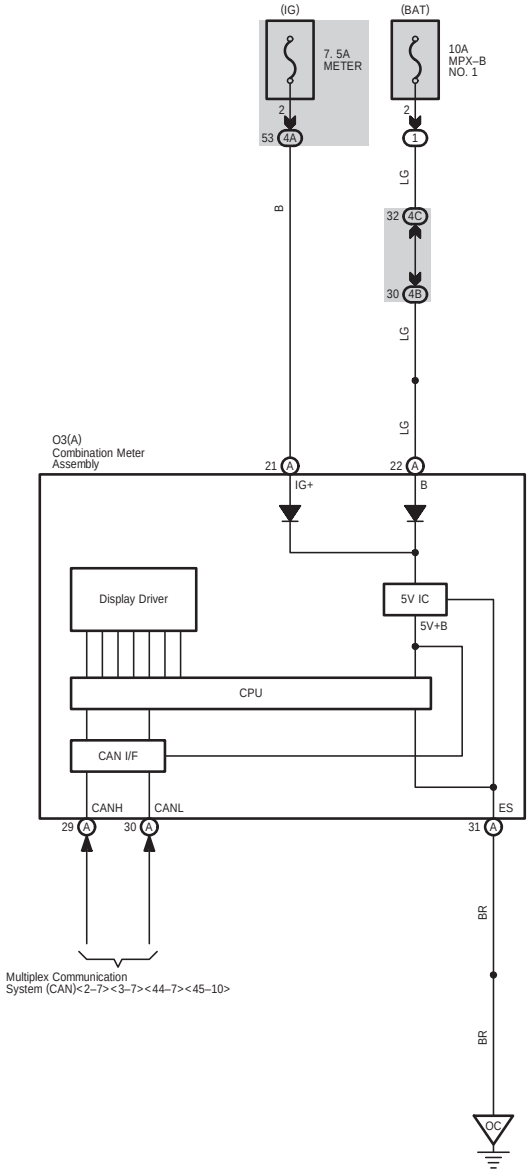
Blind Spot Monitor System