# [Instrument Panel J/B Assembly Inner Circuit]

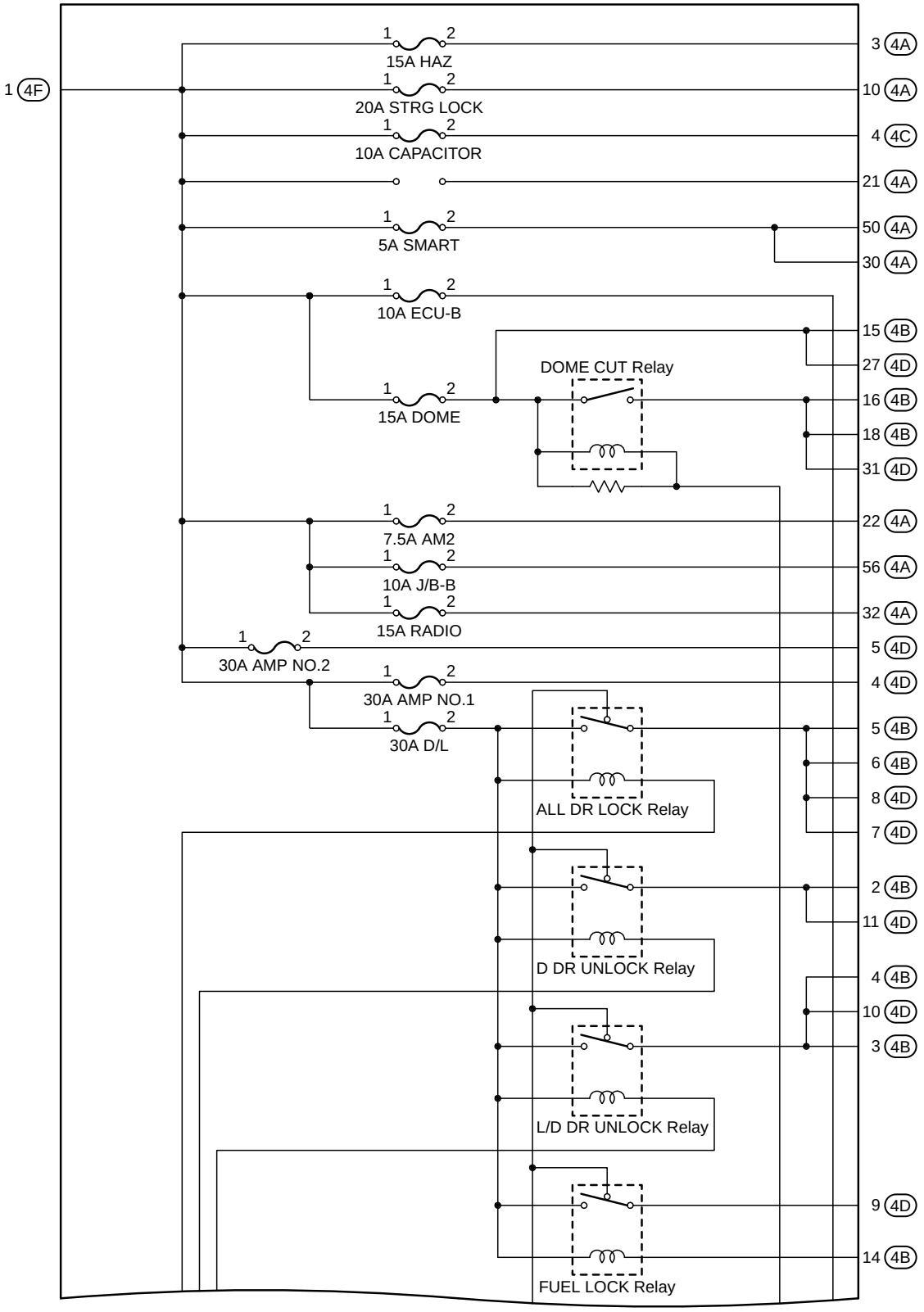


(Cont. Next Page)

# [Instrument Panel J/B Assembly Inner Circuit]

(Cont'd)

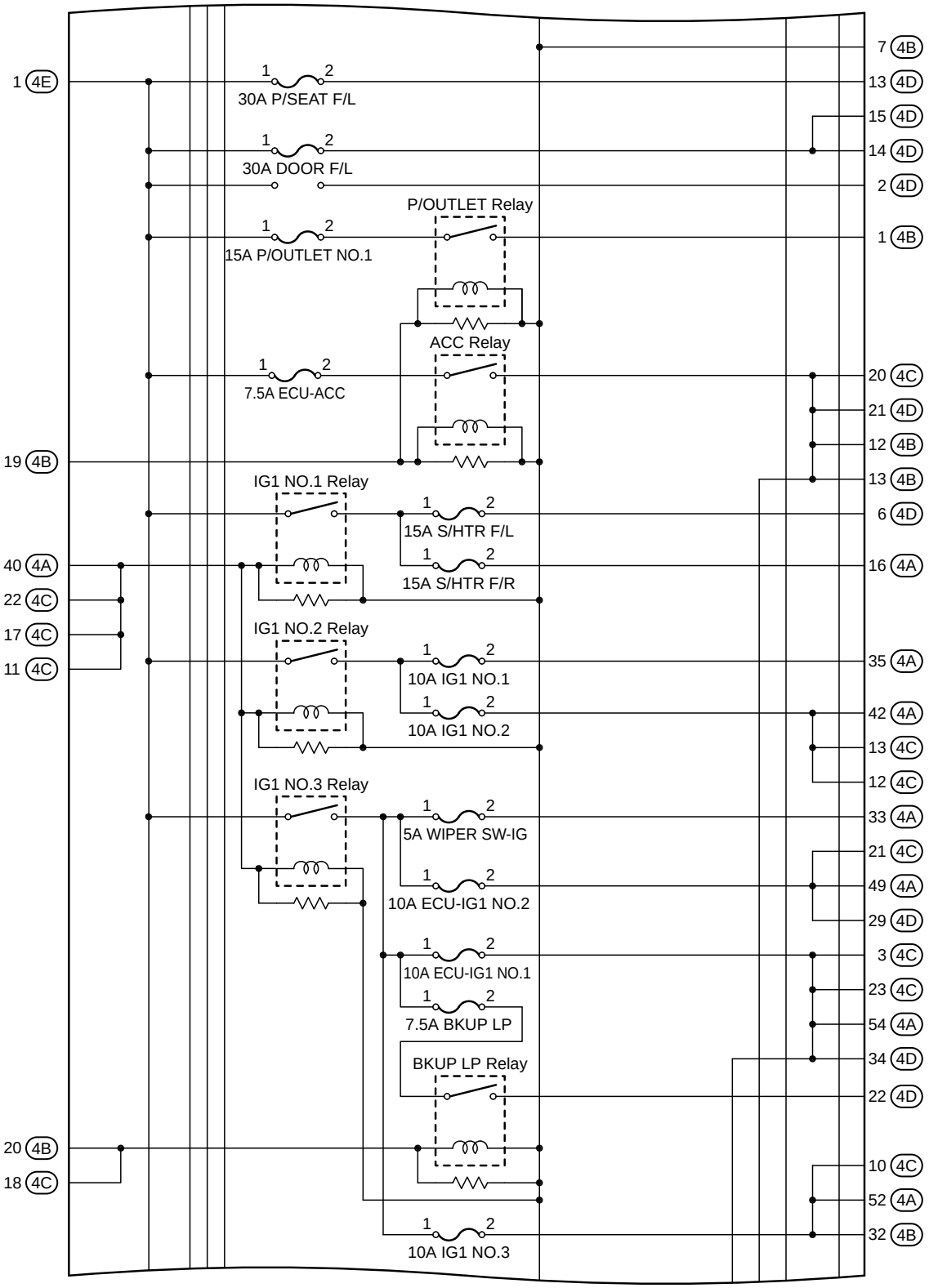


(Cont. Next Page)

# [Instrument Panel J/B Assembly Inner Circuit]

(Cont'd)

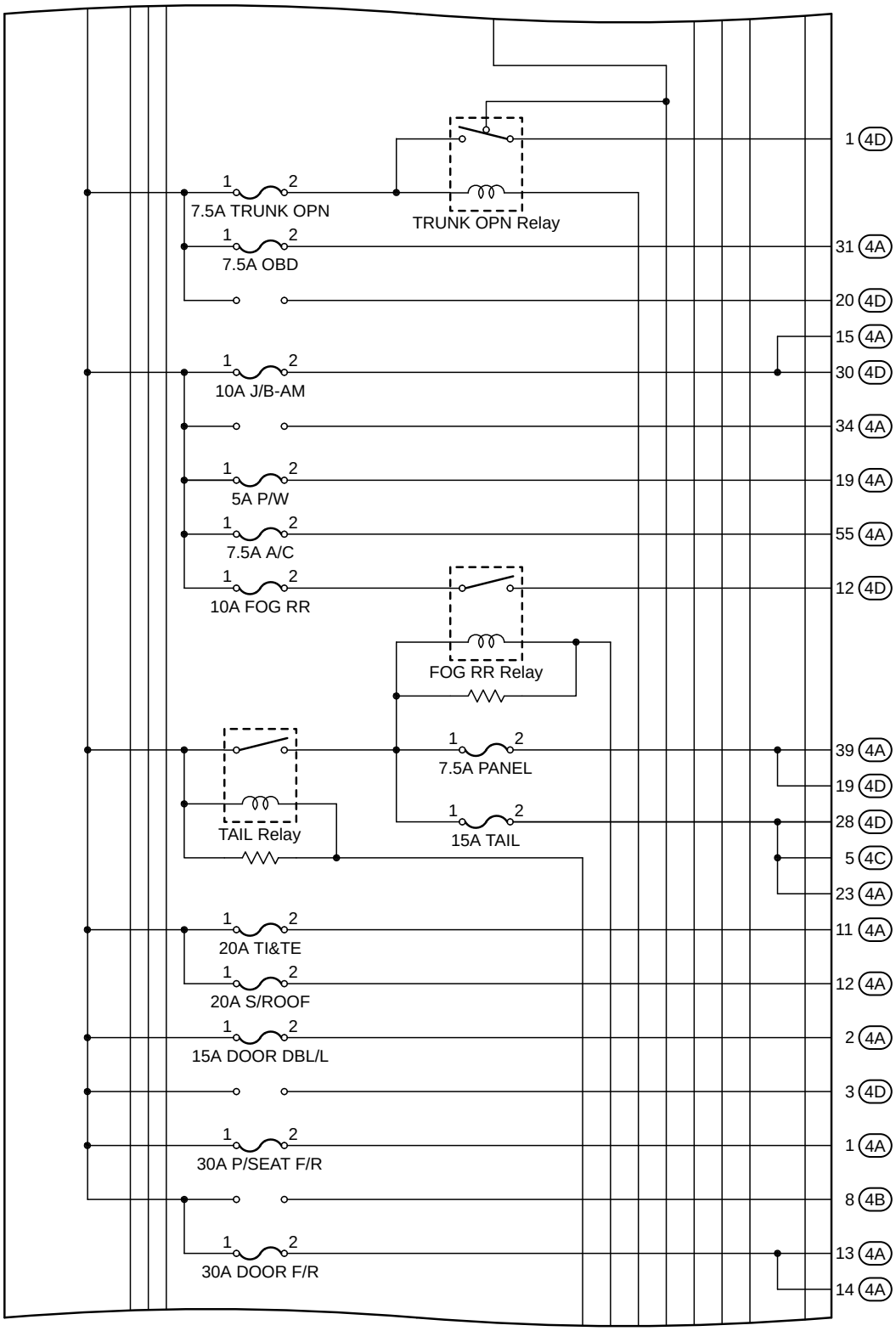


(Cont. Next Page)

# [Instrument Panel J/B Assembly Inner Circuit]

(Cont'd)

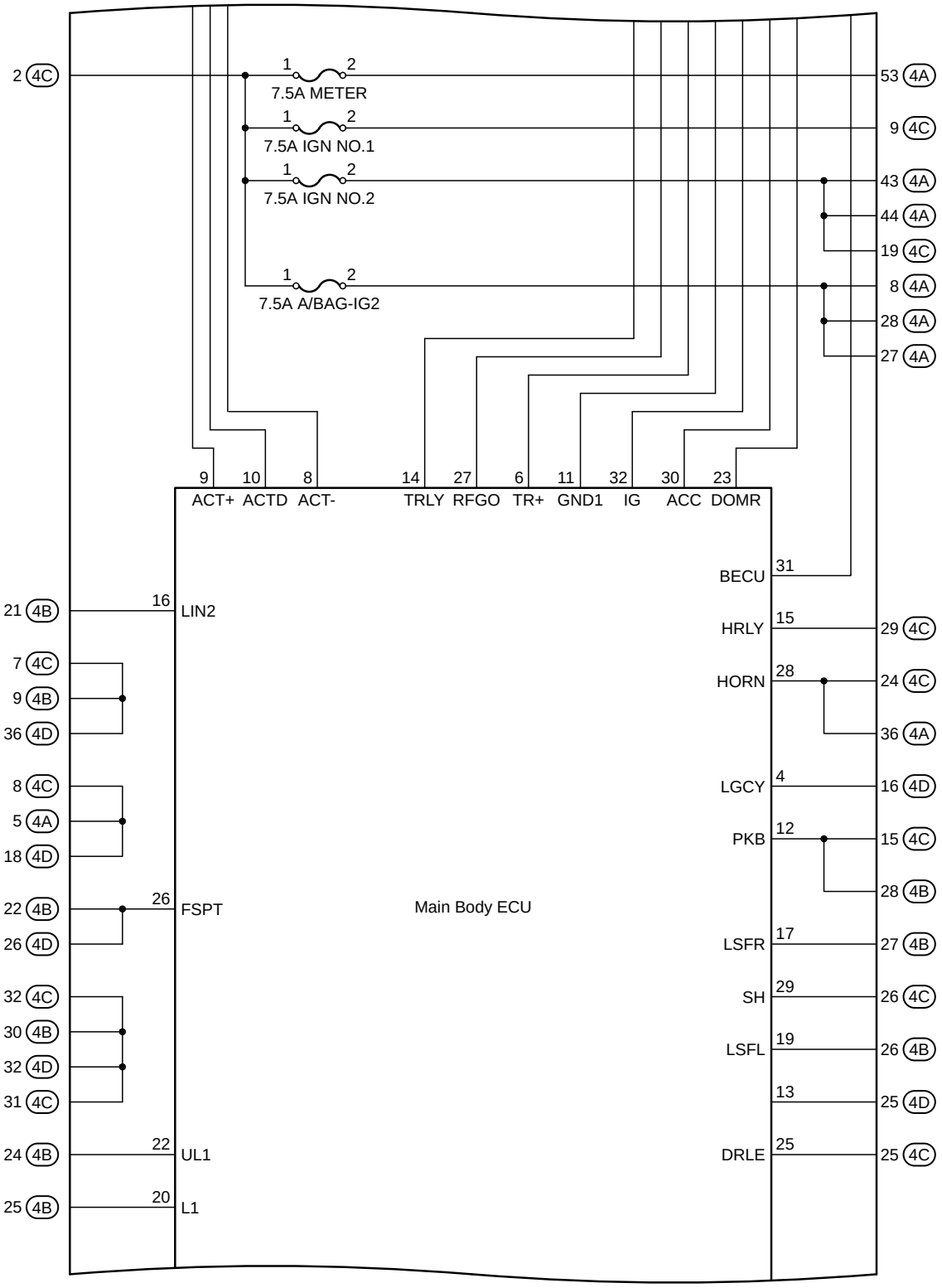


(Cont. Next Page)

# [Instrument Panel J/B Assembly Inner Circuit]
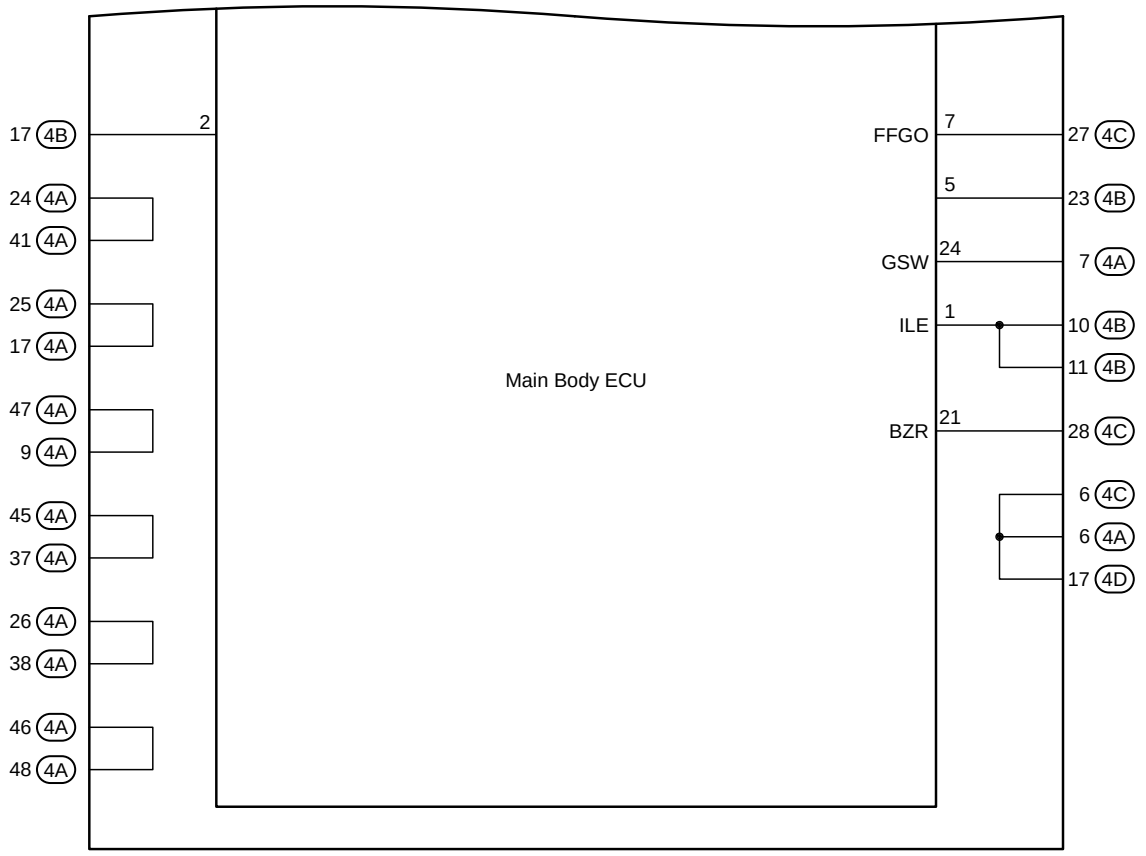
(Cont'd)