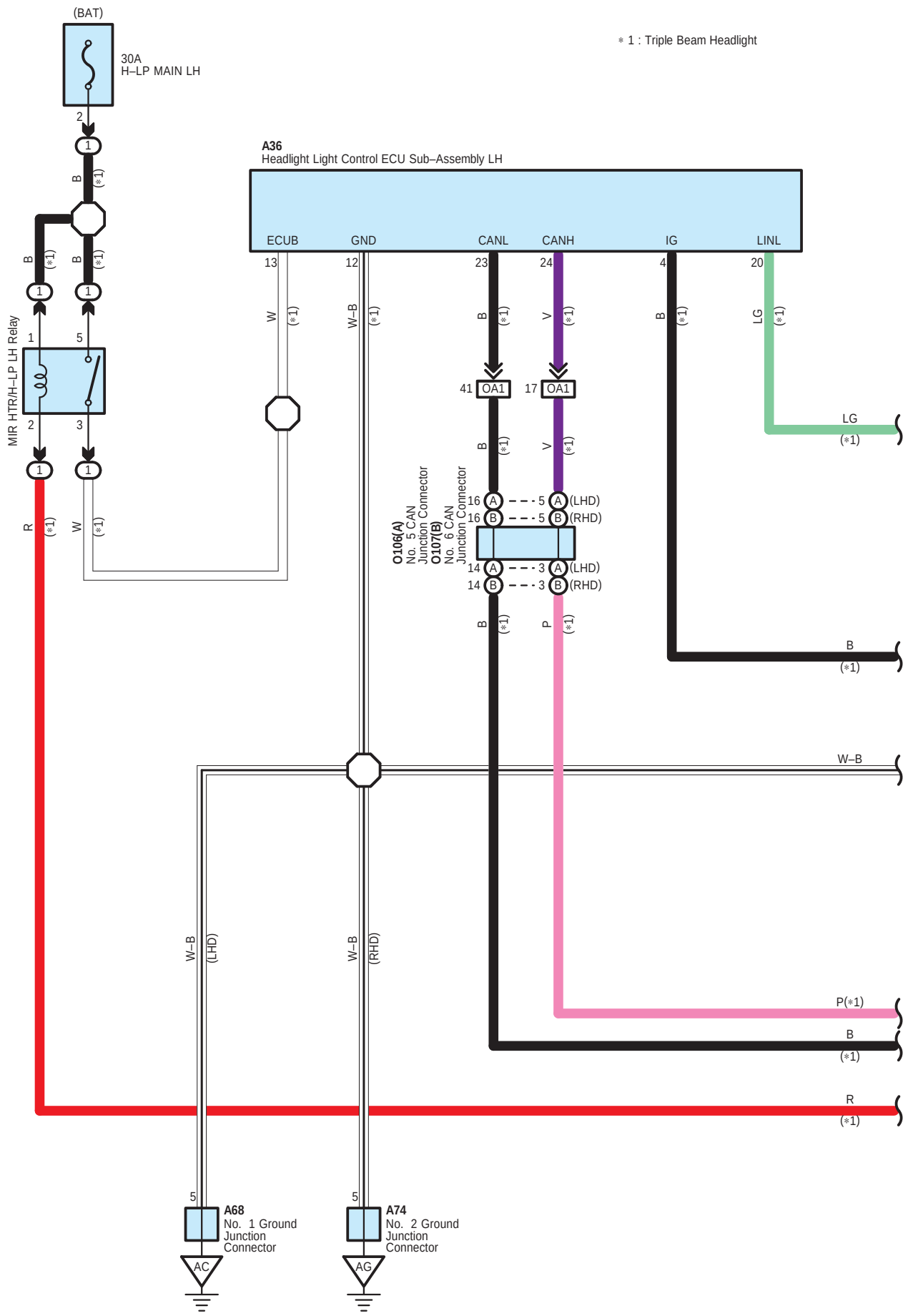
(BAT)
30A
H–LP MAIN LH
∗ 1 : Triple Beam Headlight
A36
Headlight Light Control ECU Sub–Assembly LH
ECUB
GND
CANL
CANH
IG
LINL
MIR HTR/H–LP LH Relay
OA1
O106(A)
No. 5 CAN
Junction Connector
O107(B)
No. 6 CAN
Junction Connector
(LHD)
(RHD)
LG
B
W–B
P(∗1)
R
A68
No. 1 Ground
Junction
Connector
A74
No. 2 Ground
Junction
Connector
AC
AG

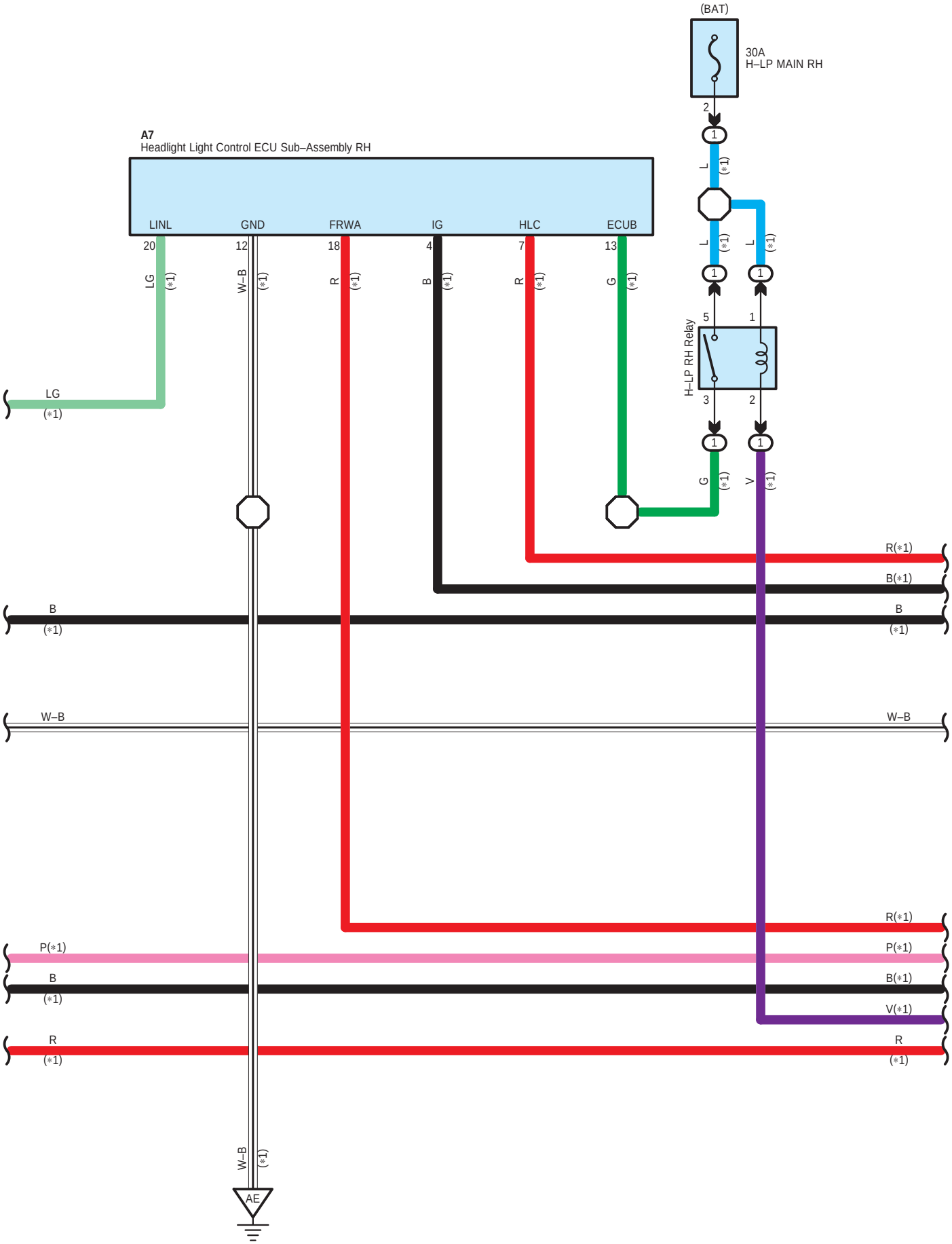
(BAT)
30A
H–LP MAIN RH
2
1
L
(*1)
A7
Headlight Light Control ECU Sub–Assembly RH
LINL
GND
FRWA
IG
HLC
ECUB
20
12
18
4
7
13
LG
W–B
R
B
R
G
H–LP RH Relay
5
1
3
2
G
V
LG
(*1)
R(*1)
B(*1)
B
(*1)
W–B
P(*1)
V(*1)
R
(*1)
AE

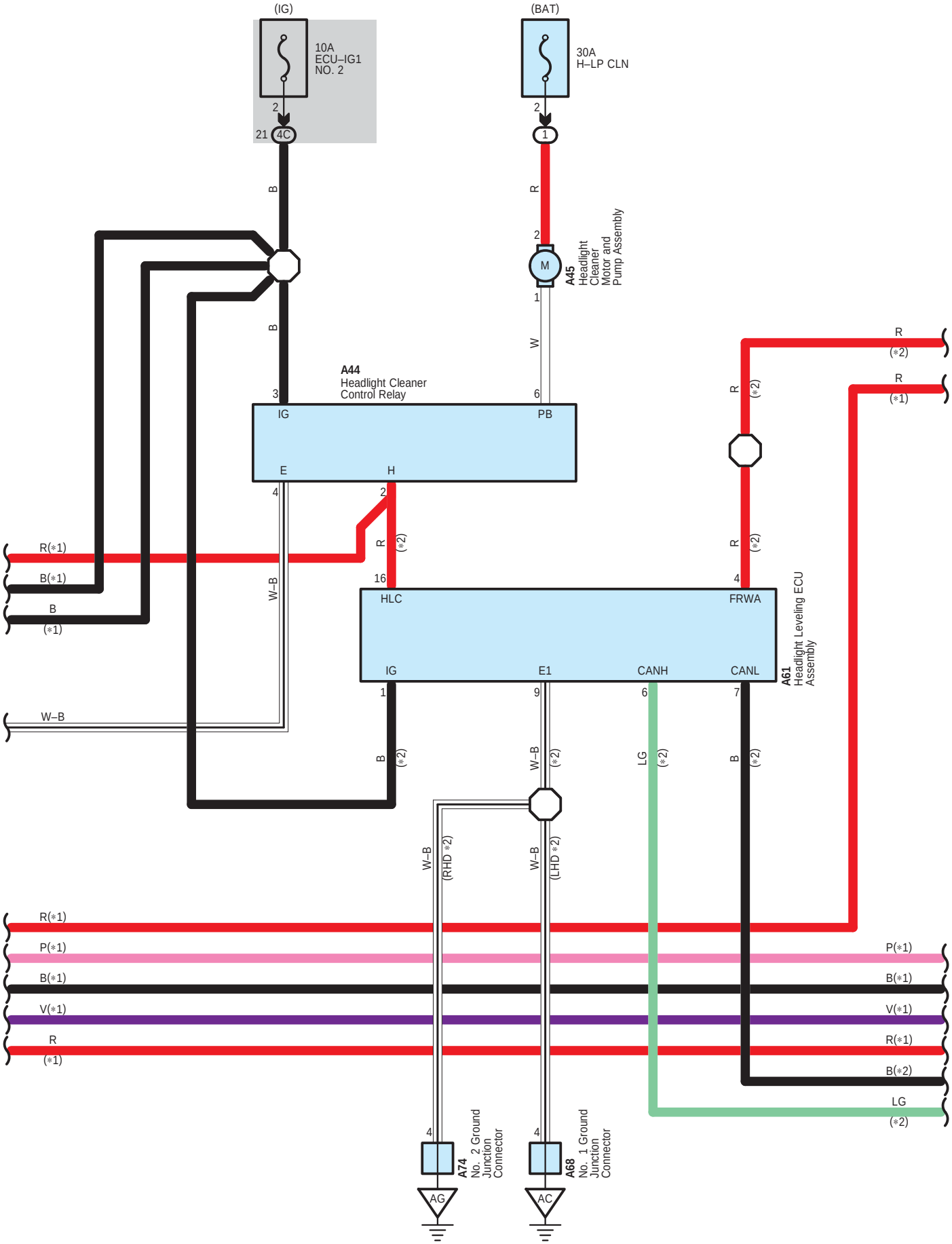
(IG)
10A
ECU–IG1
NO. 2
2
21 4C
B
B
(BAT)
30A
H–LP CLN
2
1
R
2
M
A45
Headlight
Cleaner
Motor and
Pump Assembly
1
W
6
A44
Headlight Cleaner
Control Relay
3
IG
PB
E
H
4
2
R
(*2)
16
HLC
R(*1)
B(*1)
B
(*1)
W–B
W–B
R
(*2)
R
(*2)
R
(*2)
R
(*1)
4
FRWA
A61
Headlight Leveling ECU
Assembly
IG
E1
CANH
CANL
1
9
6
7
B
(*2)
W–B
(*2)
LG
(*2)
B
(*2)
W–B
(RHD *2)
W–B
(LHD *2)
R(*1)
P(*1)
B(*1)
V(*1)
R
(*1)
P(*1)
B(*1)
V(*1)
R(*1)
B(*2)
LG
(*2)
4
A74
No. 2 Ground
Junction
Connector
AG
4
A68
No. 1 Ground
Junction
Connector
AC

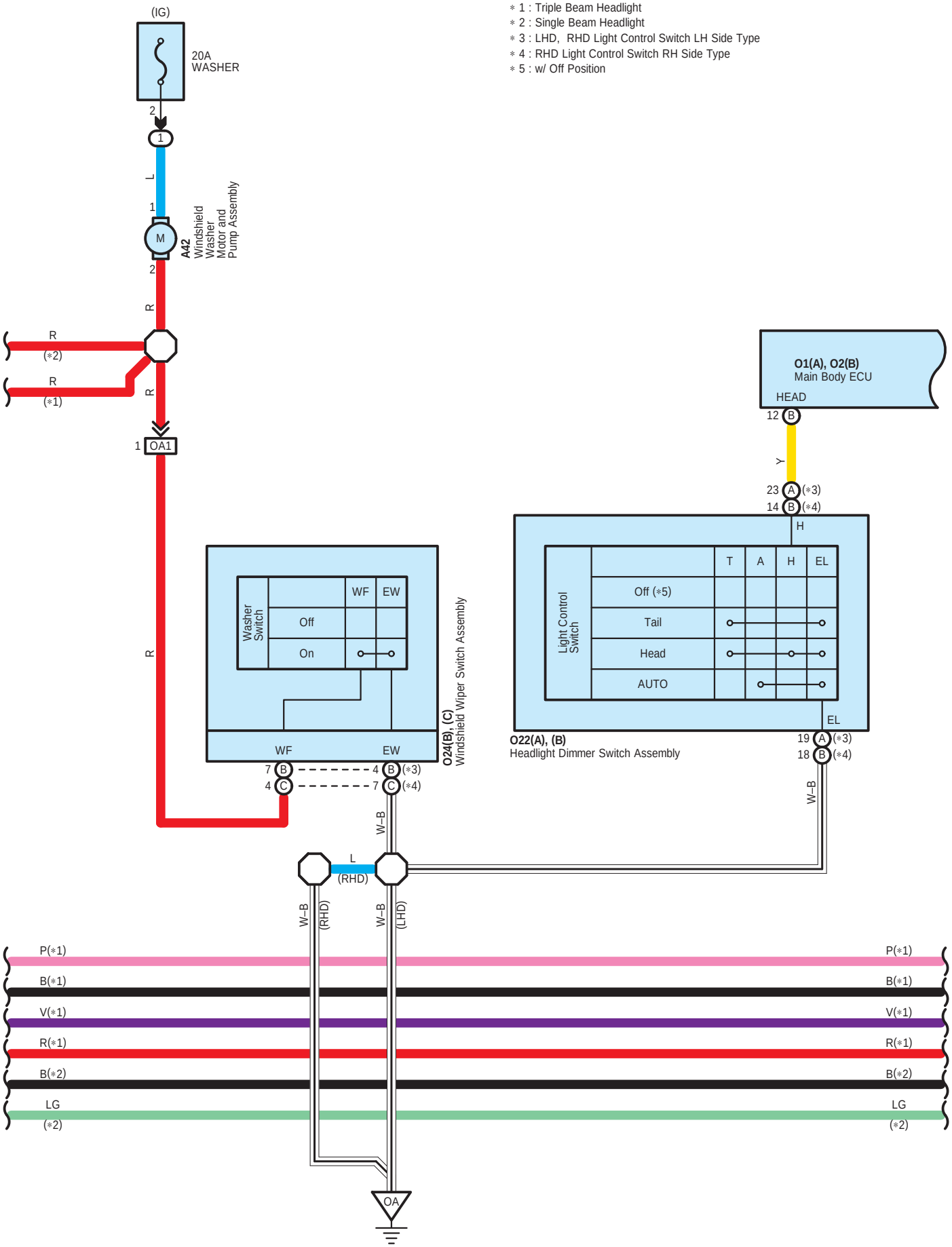
∗ 1 : Triple Beam Headlight
∗ 2 : Single Beam Headlight
∗ 3 : LHD, RHD Light Control Switch LH Side Type
∗ 4 : RHD Light Control Switch RH Side Type
∗ 5 : w/ Off Position
(IG)
20A
WASHER
A42
Windshield Washer Motor and Pump Assembly
OA1
O1(A), O2(B)
Main Body ECU
HEAD
Y
H
EL
Light Control Switch
T
A
H
EL
Off (∗5)
Tail
Head
AUTO
O22(A), (B)
Headlight Dimmer Switch Assembly
Washer Switch
WF
EW
Off
On
O24(B), (C)
Windshield Wiper Switch Assembly
W–B
L
(RHD)
(LHD)
P(∗1)
B(∗1)
V(∗1)
R(∗1)
B(∗2)
LG
(∗2)
OA

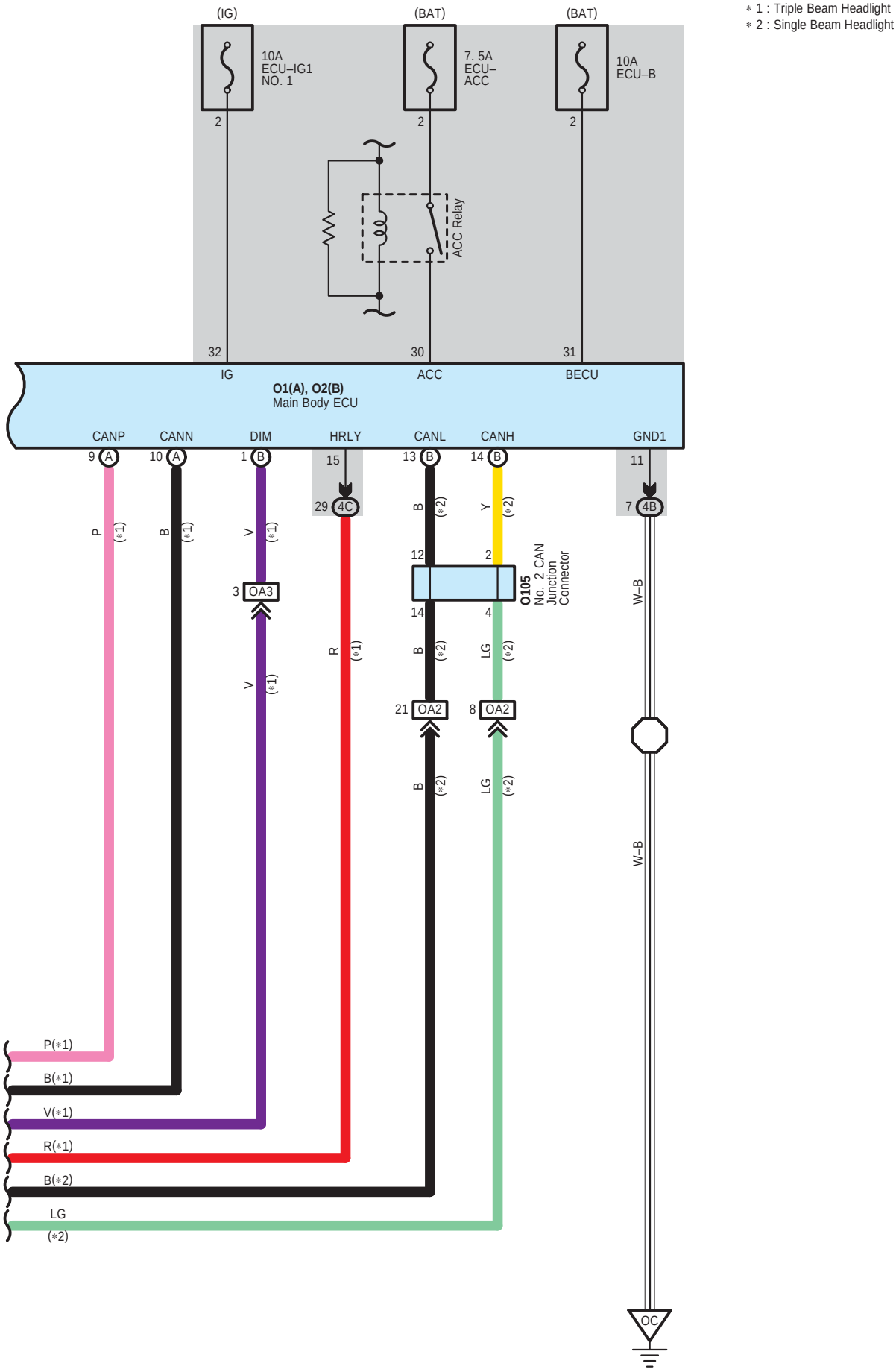

* 1 : Triple Beam Headlight
* 2 : Single Beam Headlight

A7
Gray

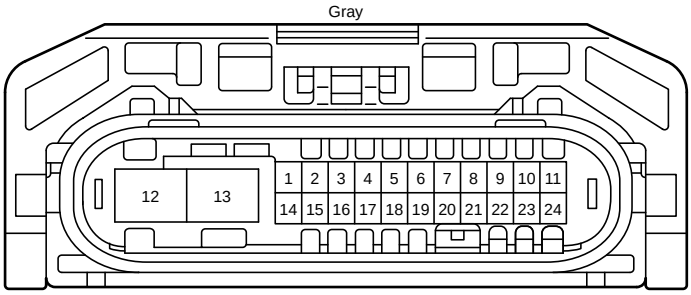

90980-12A92

A36
Gray

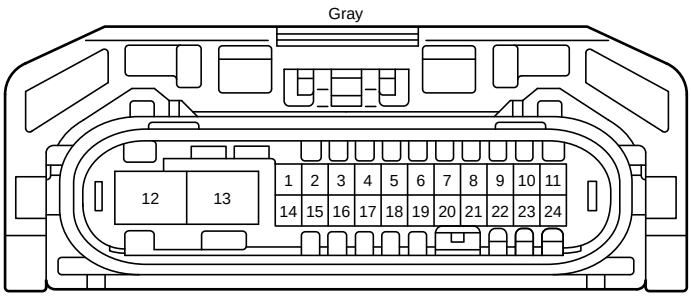

90980-12A92

A42
Black

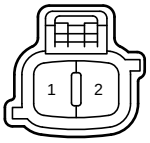

90980-11019

A44
Gray

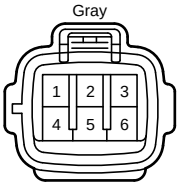

90980-11194

A45
Black

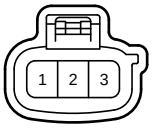

90980-10981

A61
White

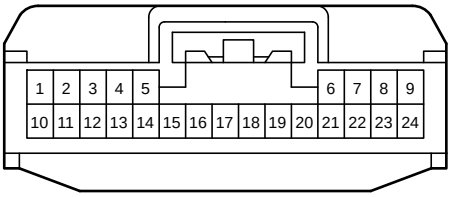

90980-12404

A68
White

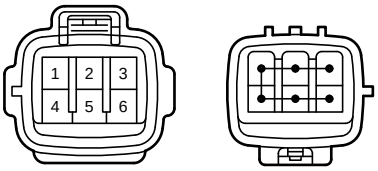

90980-11194

A74
White

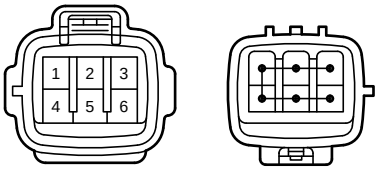

90980-11194

O1
White

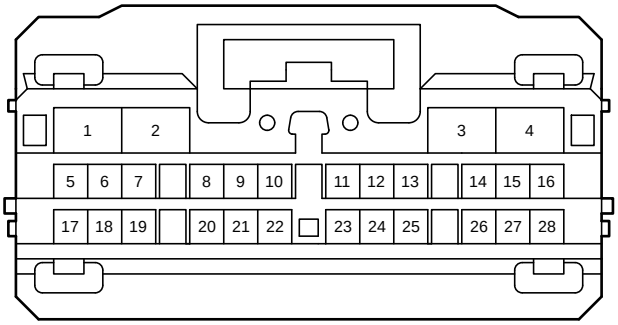

90980-12908

O2
White

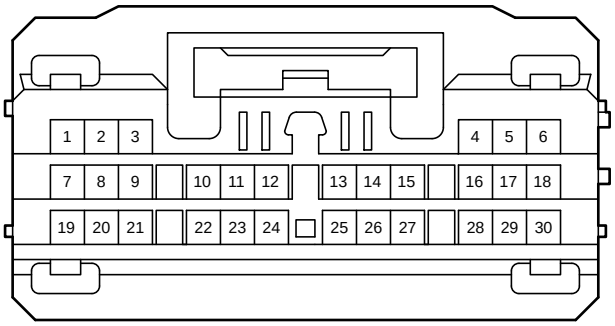

90980-12909

O22
Black

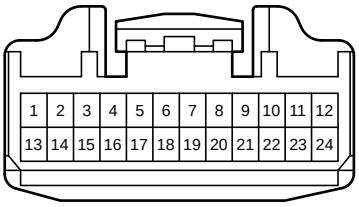

90980-12554

O24
White

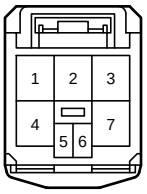

90980-12358

O105
White

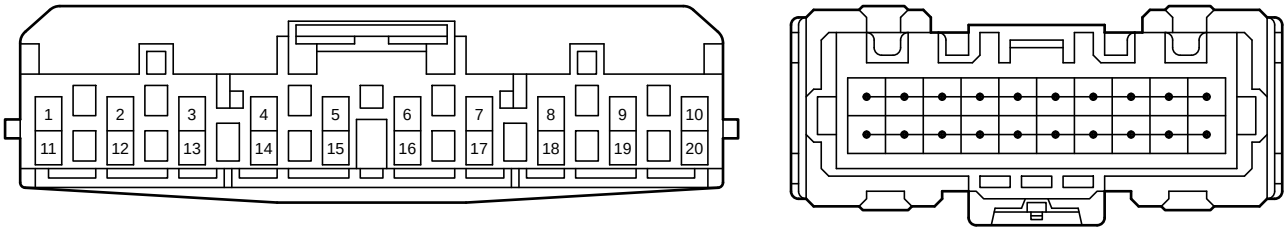

90980-12A58

O106
Black

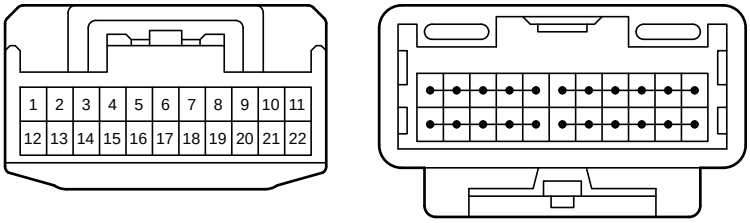

90980-12372

O107
Black

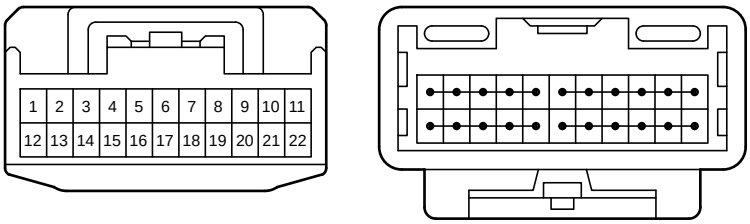

90980-12372

4B
White

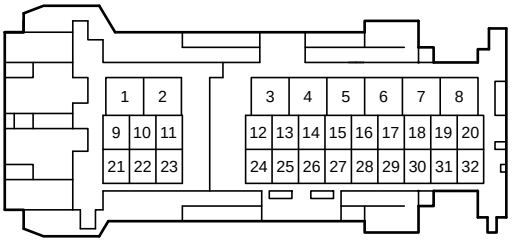

90980-12A48

4C
White

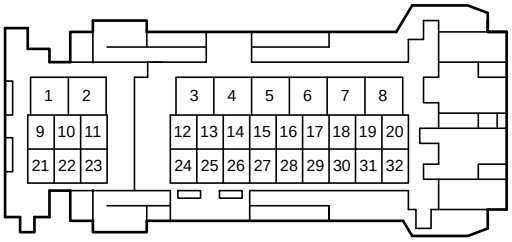

90980-12A47

OA1
White

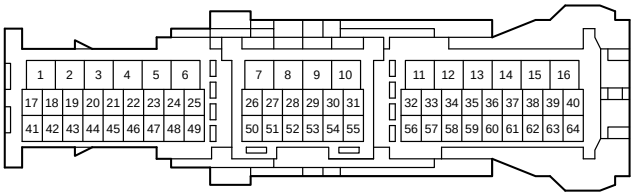

90980-12774

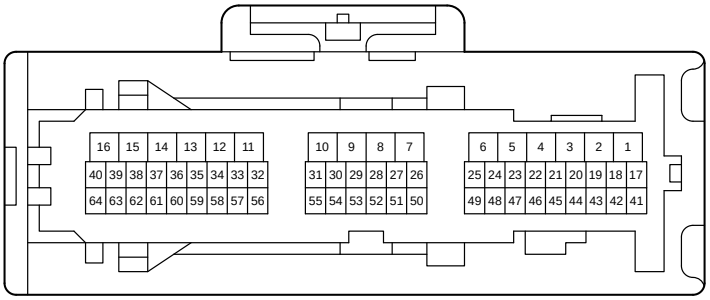

90980-12798

OA2
White

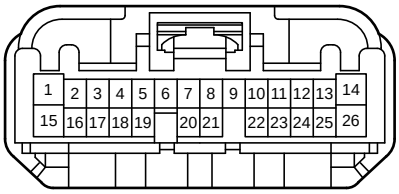

82824-24090

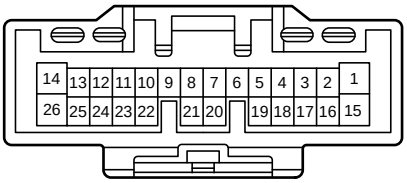

82824-24080

OA3
White

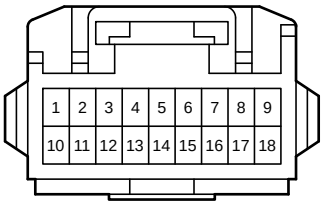

82824-53070

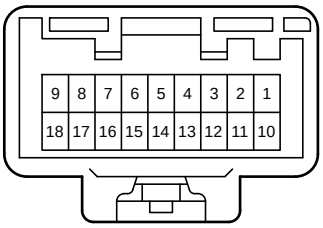

82824-53060