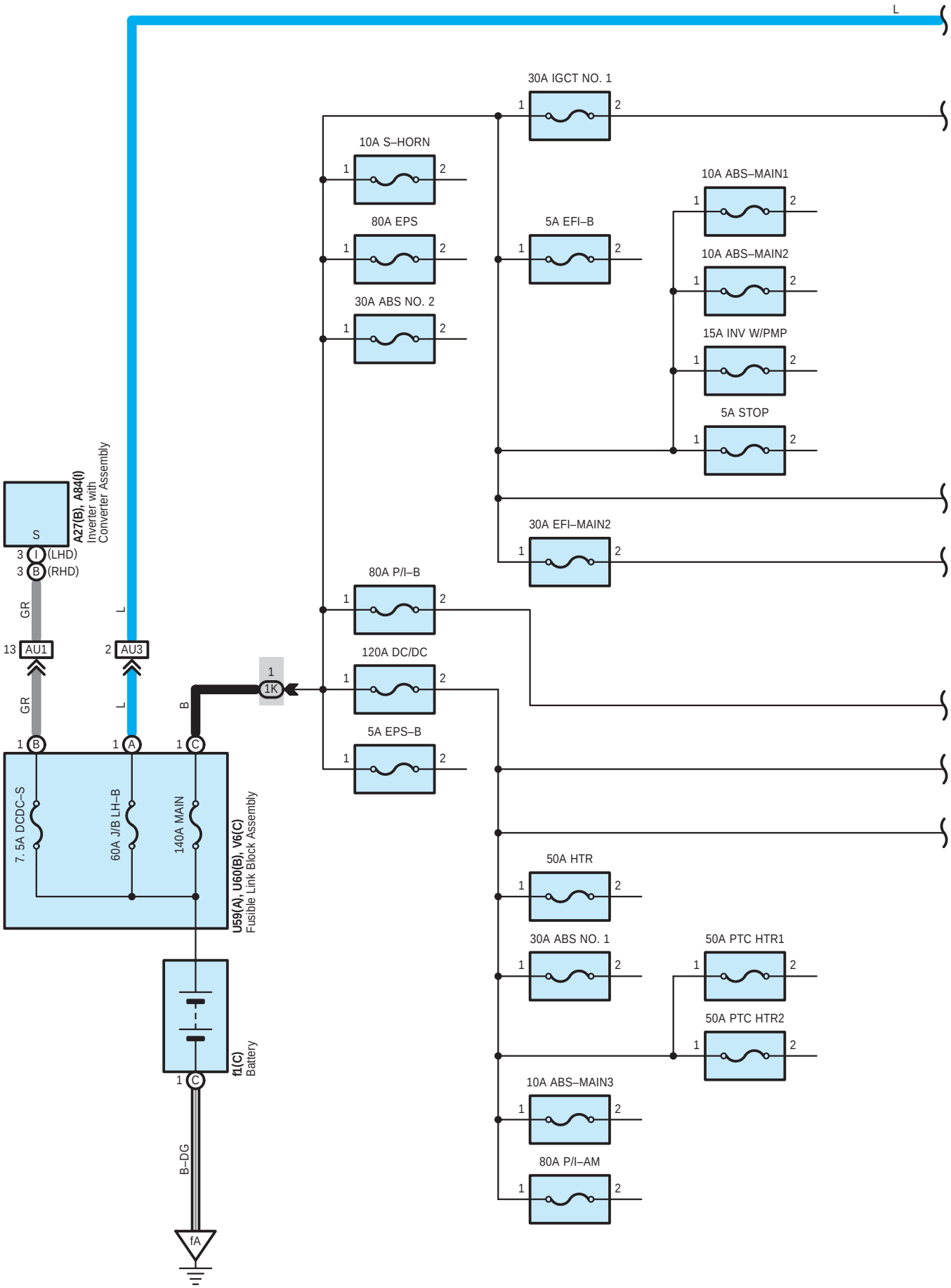
L
30A IGCT NO. 1
10A S–HORN
80A EPS
30A ABS NO. 2
5A EFI–B
10A ABS–MAIN1
10A ABS–MAIN2
15A INV W/PMP
5A STOP
30A EFI–MAIN2
80A P/I–B
120A DC/DC
5A EPS–B
50A HTR
30A ABS NO. 1
50A PTC HTR1
50A PTC HTR2
10A ABS–MAIN3
80A P/I–AM
A27(B), A84(I)
Inverter with
Converter Assembly
S
3 I (LHD)
3 B (RHD)
GR
13 AU1
2 AU3
1 1K
B
1 B
1 A
1 C
7. 5A DCDC–S
60A J/B LH–B
140A MAIN
U59(A), U60(B), V6(C)
Fusible Link Block Assembly
f1(C)
Battery
B–DG
fA

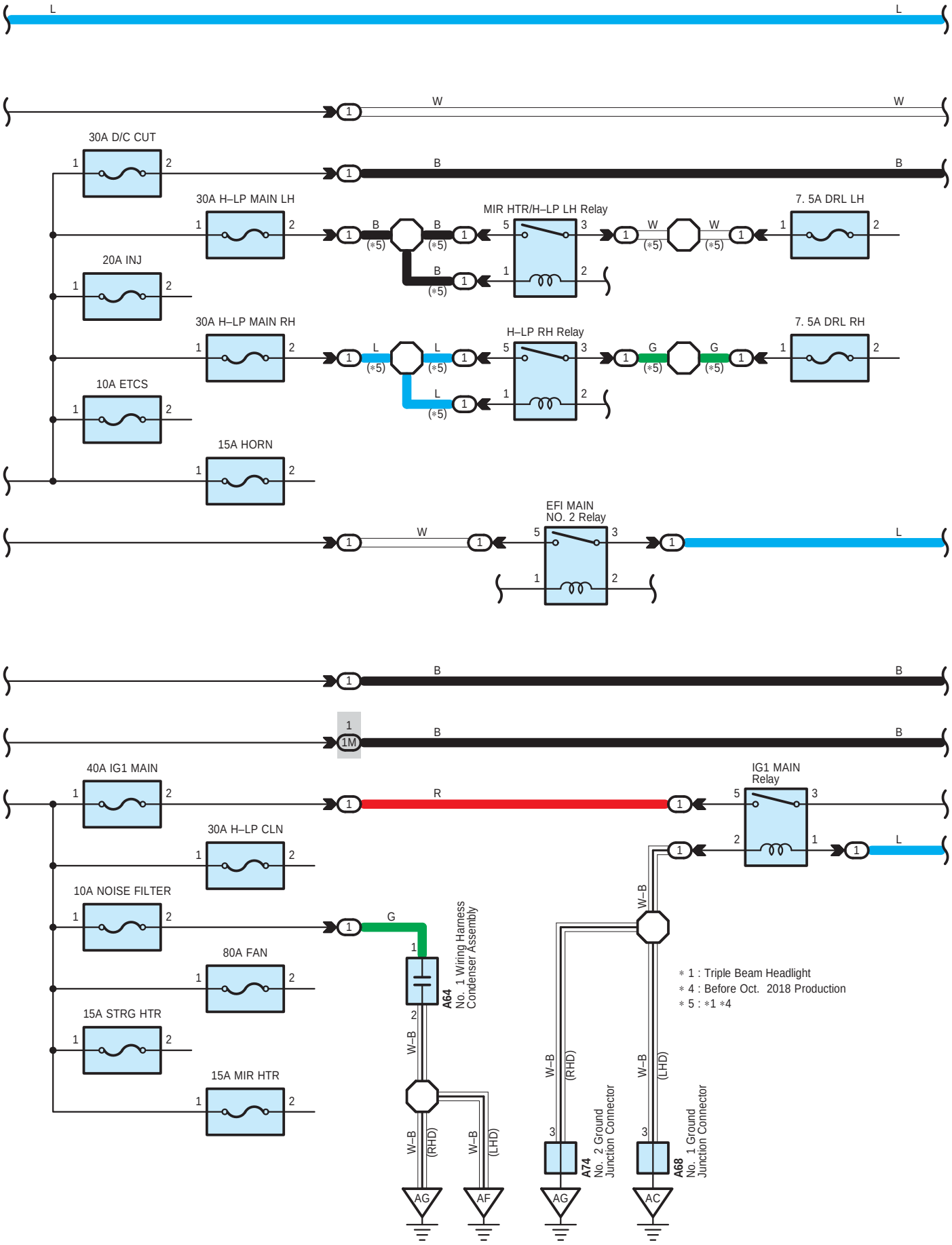
L
W
30A D/C CUT
B
30A H–LP MAIN LH
MIR HTR/H–LP LH Relay
7. 5A DRL LH
20A INJ
30A H–LP MAIN RH
H–LP RH Relay
7. 5A DRL RH
10A ETCS
15A HORN
EFI MAIN
NO. 2 Relay
1M
40A IG1 MAIN
IG1 MAIN
Relay
R
30A H–LP CLN
10A NOISE FILTER
G
80A FAN
15A STRG HTR
15A MIR HTR
A64
No. 1 Wiring Harness
Condenser Assembly
W–B
(RHD)
(LHD)
A74
No. 2 Ground
Junction Connector
A68
No. 1 Ground
Junction Connector
AG
AF
AC
∗ 1 : Triple Beam Headlight
∗ 4 : Before Oct. 2018 Production
∗ 5 : ∗1 ∗4

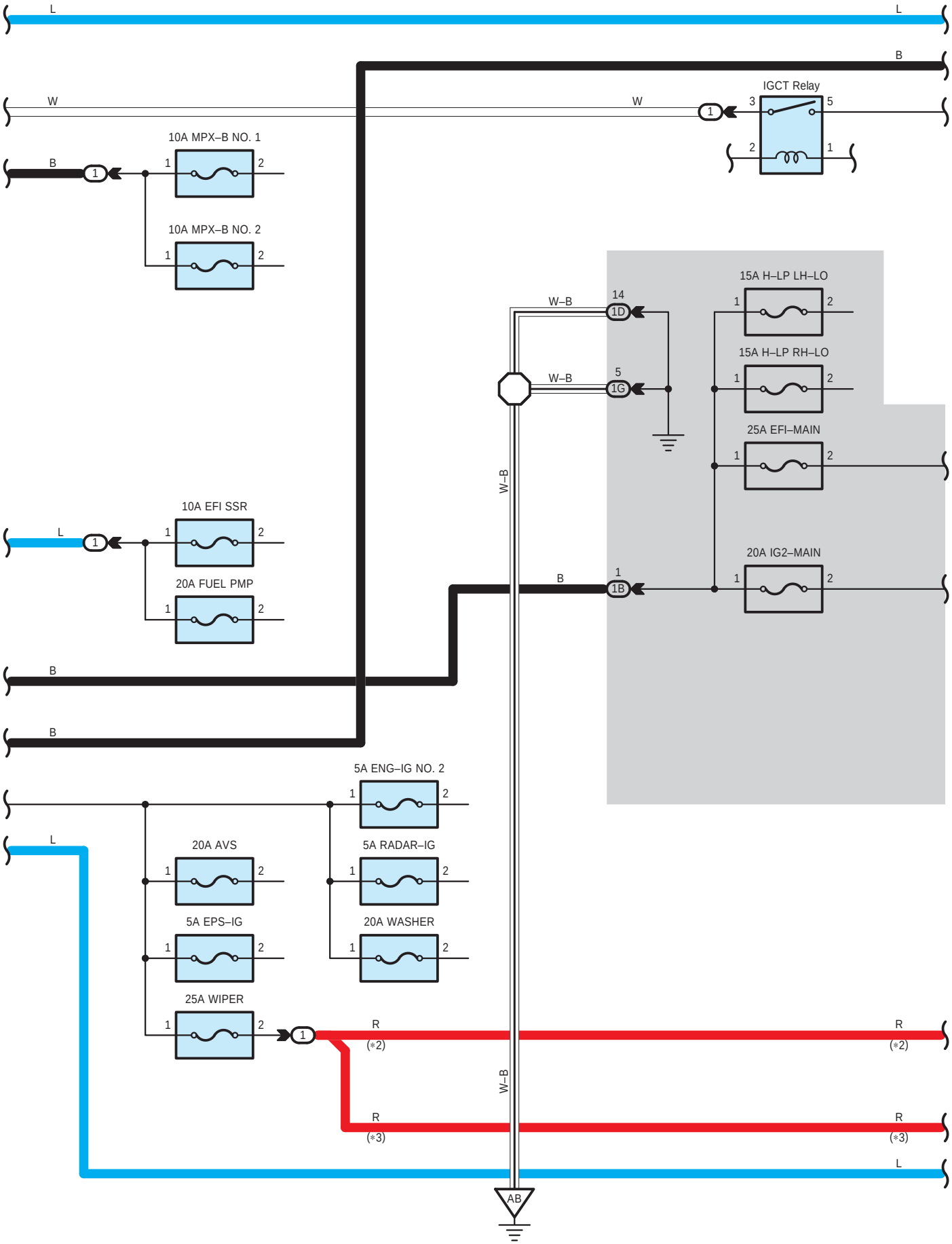
L
L
B
W
W
IGCT Relay
3
5
2
1
1
10A MPX–B NO. 1
B
1
1
2
10A MPX–B NO. 2
1
2
15A H–LP LH–LO
W–B
14
1D
1
2
15A H–LP RH–LO
W–B
5
1G
1
2
25A EFI–MAIN
1
2
W–B
10A EFI SSR
L
1
1
2
20A IG2–MAIN
B
1
1B
1
2
20A FUEL PMP
1
2
B
B
5A ENG–IG NO. 2
1
2
L
20A AVS
1
2
5A RADAR–IG
1
2
5A EPS–IG
1
2
20A WASHER
1
2
25A WIPER
1
2
1
R
(*2)
R
(*2)
W–B
R
(*3)
R
(*3)
L
AB

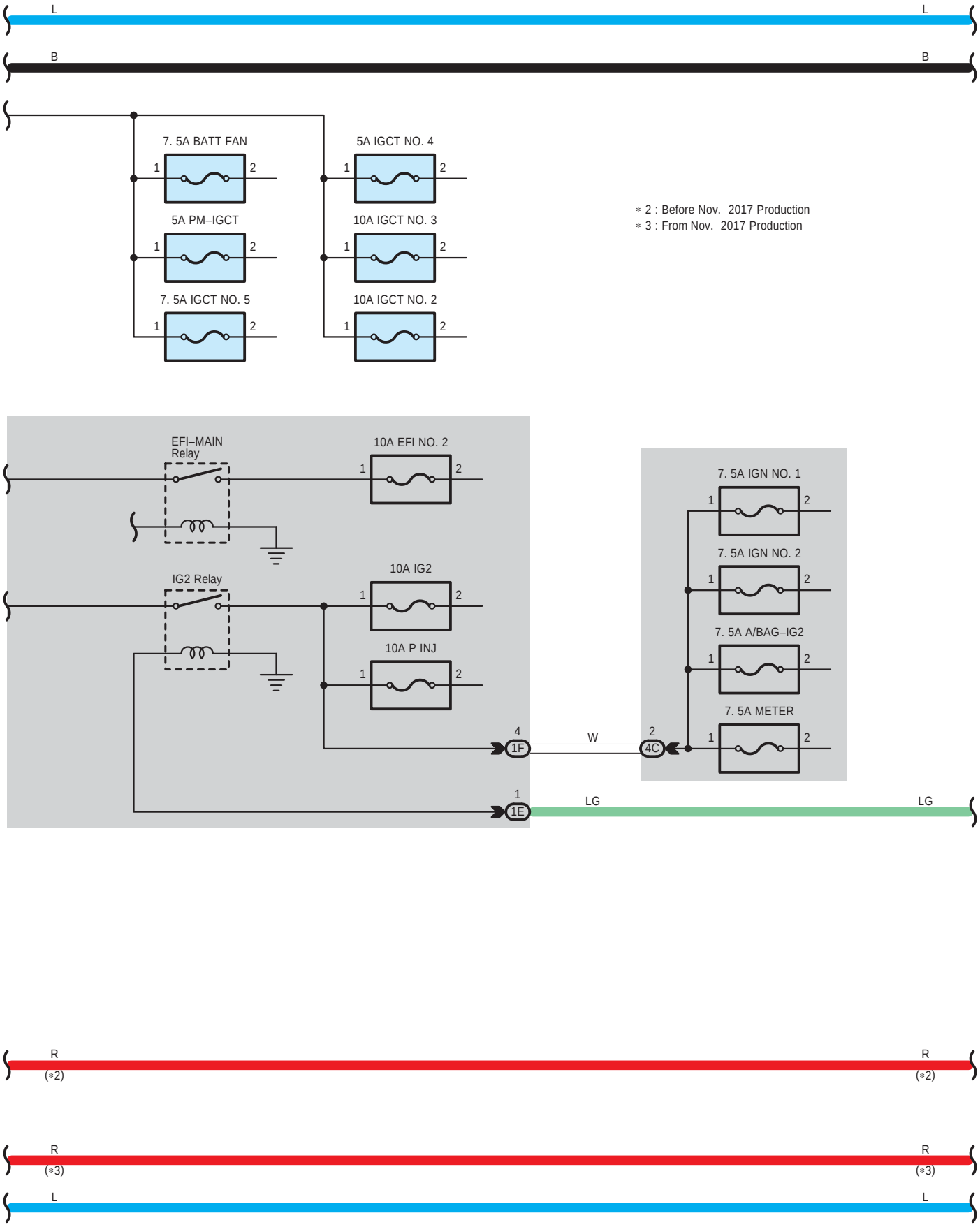
L
L
B
B
7. 5A BATT FAN
5A IGCT NO. 4
5A PM–IGCT
10A IGCT NO. 3
7. 5A IGCT NO. 5
10A IGCT NO. 2
∗ 2 : Before Nov. 2017 Production
∗ 3 : From Nov. 2017 Production
EFI–MAIN Relay
10A EFI NO. 2
IG2 Relay
10A IG2
10A P INJ
7. 5A IGN NO. 1
7. 5A IGN NO. 2
7. 5A A/BAG–IG2
7. 5A METER
4
1F
W
2
4C
1
1E
LG
LG
R
(∗2)
R
(∗2)
R
(∗3)
R
(∗3)
L
L

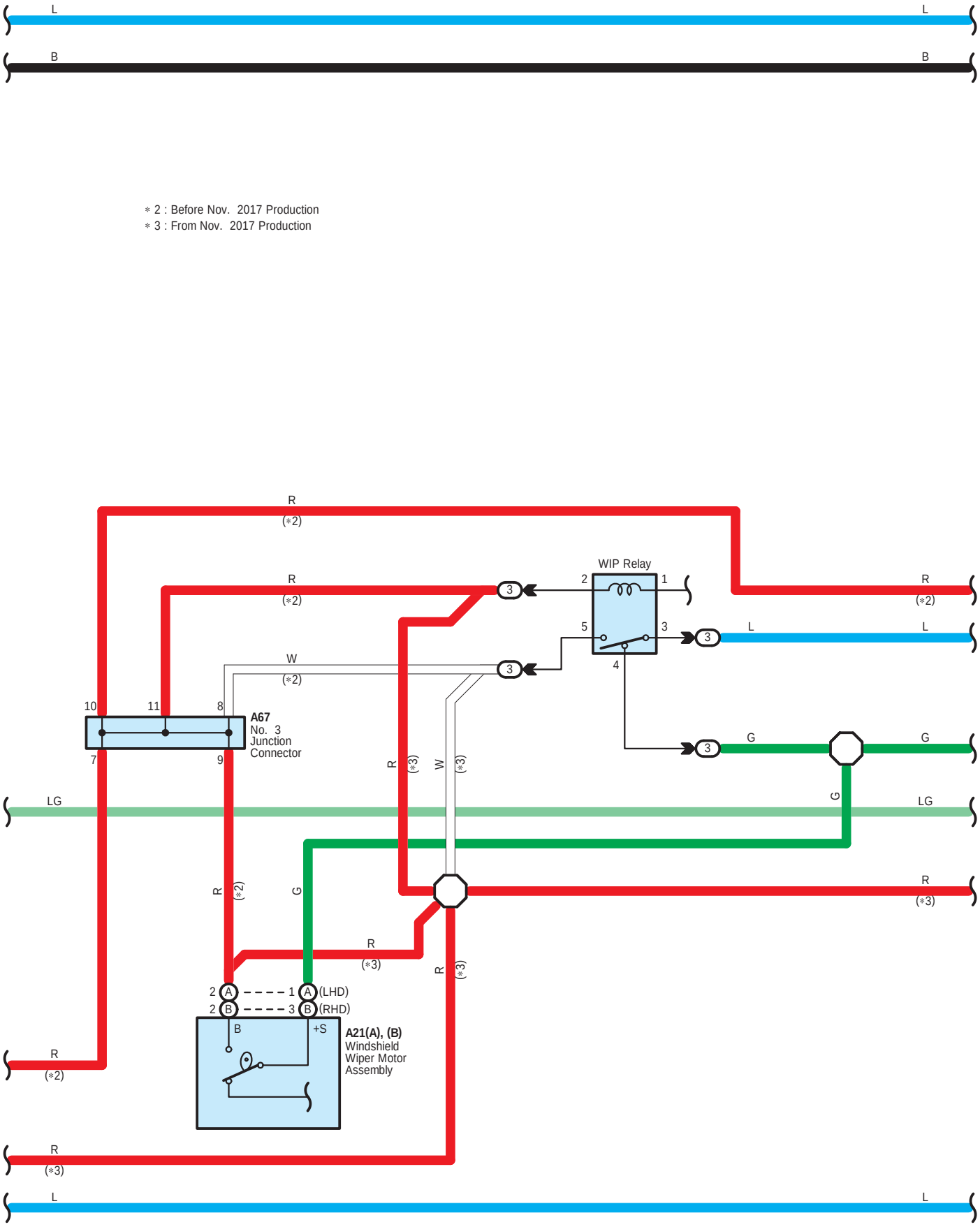
L
L
B
B
∗ 2 : Before Nov. 2017 Production
∗ 3 : From Nov. 2017 Production
R
(∗2)
WIP Relay
2
1
5
3
4
R
(∗2)
R
(∗2)
3
L
L
W
(∗2)
10
11
8
7
9
A67
No. 3
Junction
Connector
G
G
R
(∗3)
W
(∗3)
G
LG
LG
R
(∗2)
G
R
(∗3)
R
(∗3)
R
(∗3)
2 A
1 A (LHD)
2 B
3 B (RHD)
B
+S
A21(A), (B)
Windshield
Wiper Motor
Assembly
R
(∗2)
R
(∗3)
L
L

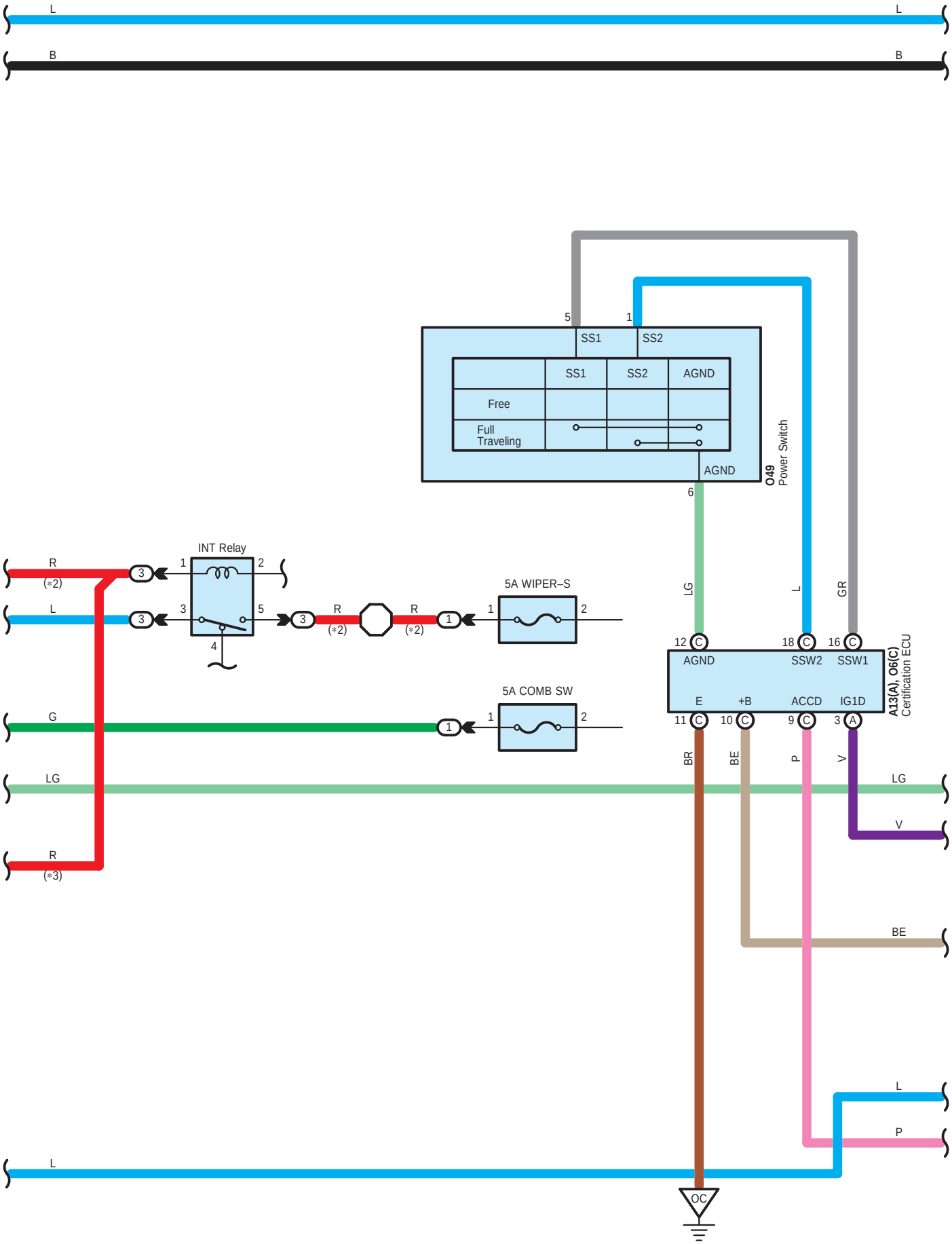
L
L
B
B
5
1
SS1
SS2
SS1
SS2
AGND
Free
Full
Traveling
AGND
6
O49
Power Switch
INT Relay
R
(*2)
L
G
LG
R
(*3)
5A WIPER–S
5A COMB SW
LG
L
GR
12
18
16
AGND
SSW2
SSW1
E
+B
ACCD
IG1D
11
10
9
3
A13(A), O6(C)
Certification ECU
BR
BE
P
V
LG
V
BE
L
P
L
OC

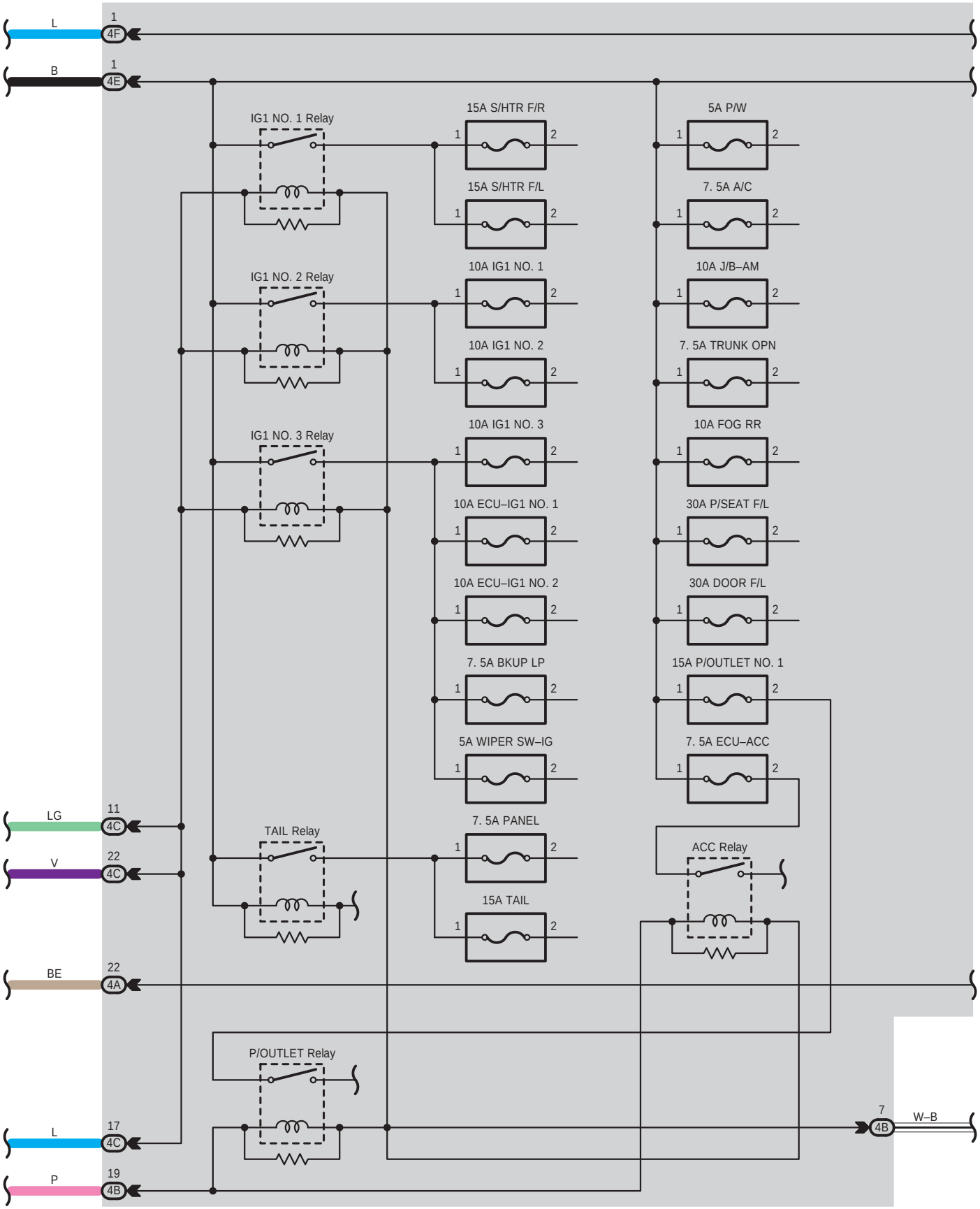
L
1
4F
B
1
4E
IG1 NO. 1 Relay
IG1 NO. 2 Relay
IG1 NO. 3 Relay
15A S/HTR F/R
15A S/HTR F/L
10A IG1 NO. 1
10A IG1 NO. 2
10A IG1 NO. 3
10A ECU–IG1 NO. 1
10A ECU–IG1 NO. 2
7. 5A BKUP LP
5A WIPER SW–IG
7. 5A PANEL
15A TAIL
5A P/W
7. 5A A/C
10A J/B–AM
7. 5A TRUNK OPN
10A FOG RR
30A P/SEAT F/L
30A DOOR F/L
15A P/OUTLET NO. 1
7. 5A ECU–ACC
ACC Relay
TAIL Relay
LG
11
4C
V
22
4C
BE
22
4A
P/OUTLET Relay
L
17
4C
P
19
4B
7
4B
W–B

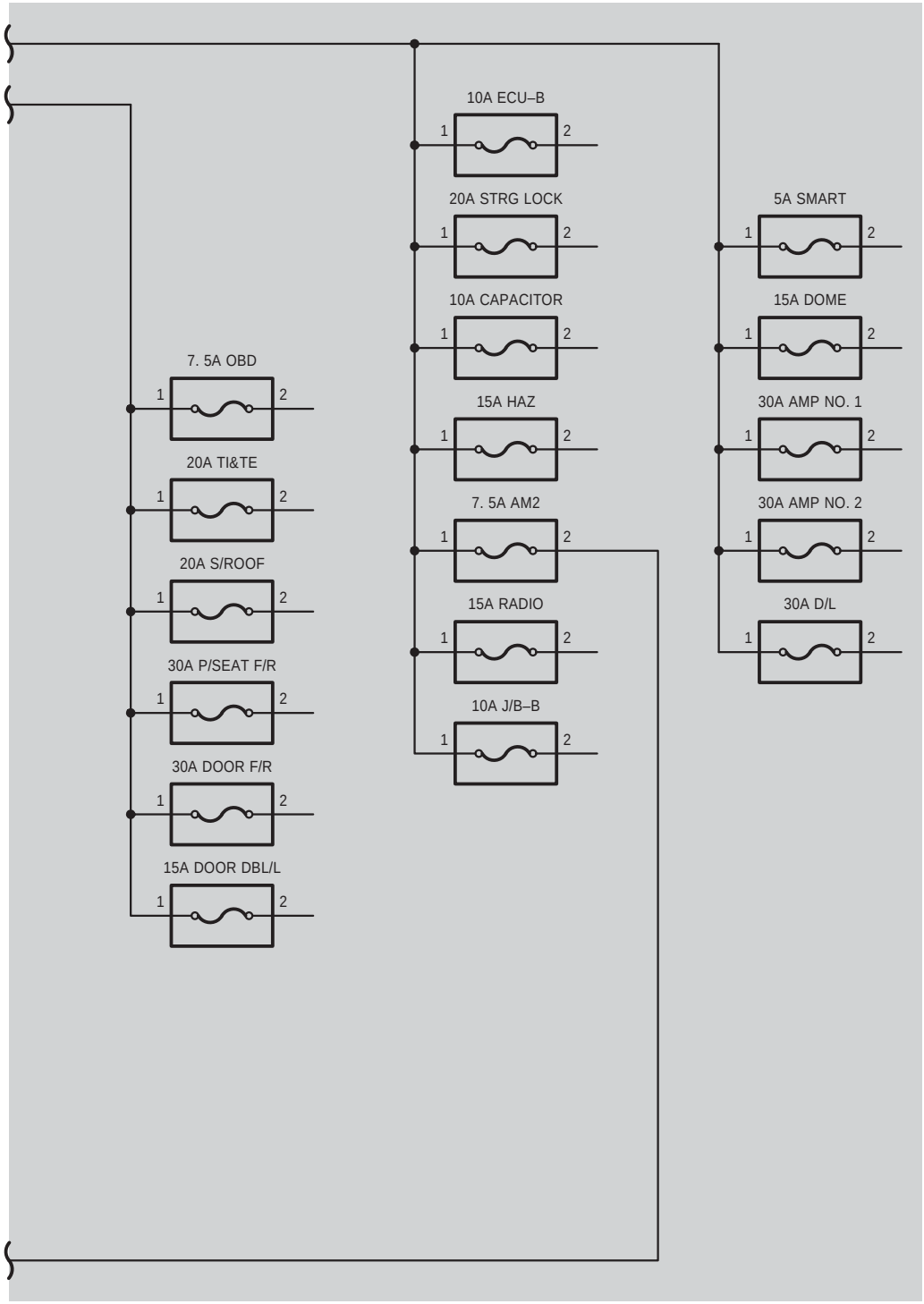
10A ECU–B
20A STRG LOCK
10A CAPACITOR
15A HAZ
7. 5A AM2
15A RADIO
10A J/B–B
5A SMART
15A DOME
30A AMP NO. 1
30A AMP NO. 2
30A D/L
7. 5A OBD
20A TI&TE
20A S/ROOF
30A P/SEAT F/R
30A DOOR F/R
15A DOOR DBL/L
1
2

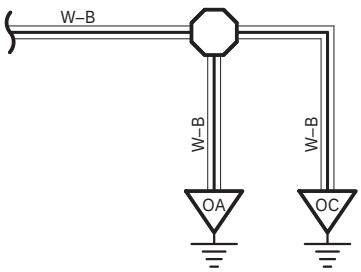
W–B
W–B
W–B
OA
OC

A13
White

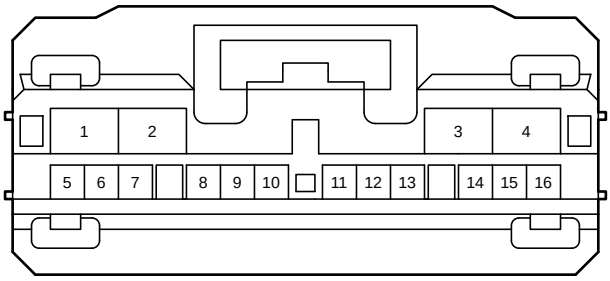

90980-12763

A21
Black

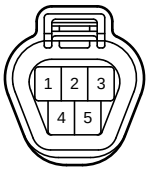

90980-11599

A27
Black

90980-12519

A64
Black

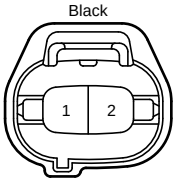

90980-11156

A67
White

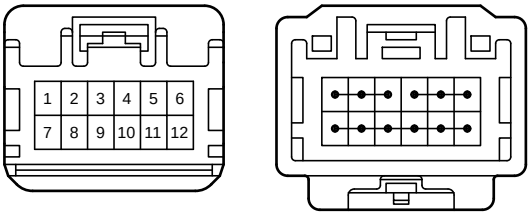

90980-12737

A68
White

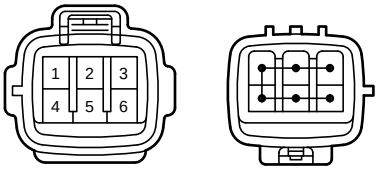

90980-11194

A74
White

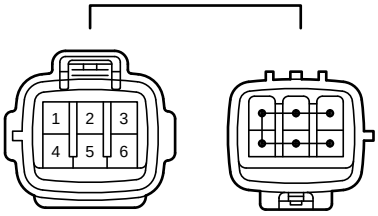

90980-11194

A84
Black

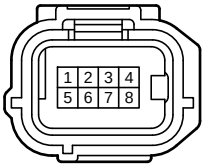

90980-12520

O6
Black

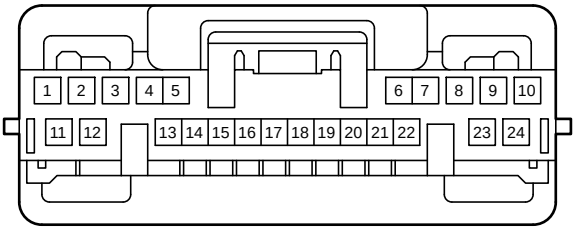

90980-12A42

O49
Black

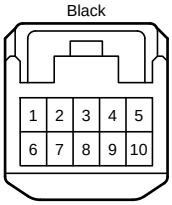

90980-12368

U59

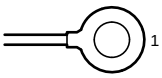

U60
Gray

90980-11243

V6

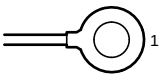

f1

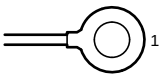

1B
Black

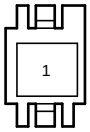

82660-30D50

1D
White

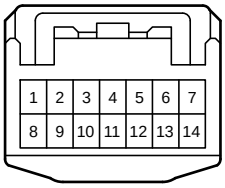

90980-12370

1E
L

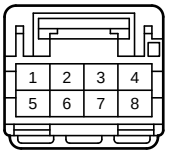

90980-12A55

1F
White

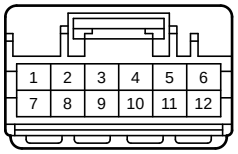

90980-12A56

1G
White

90980-12A54

1K

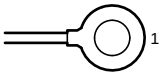

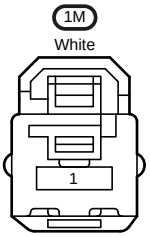

90980-12796

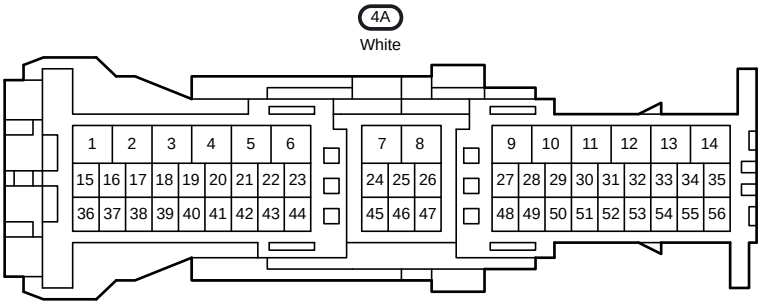

90980-12943

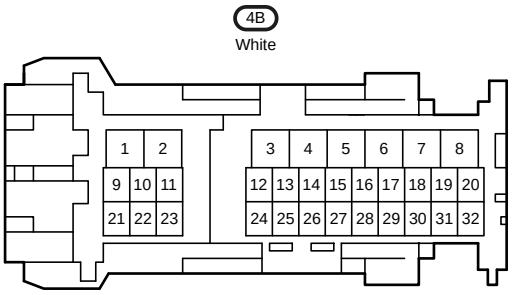

90980-12A48

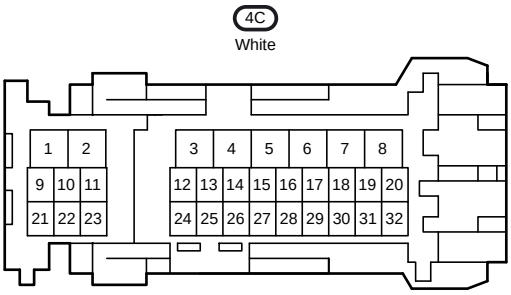

90980-12A47

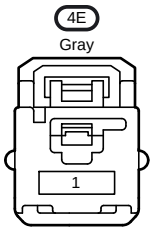

90980-12756

90980-10995

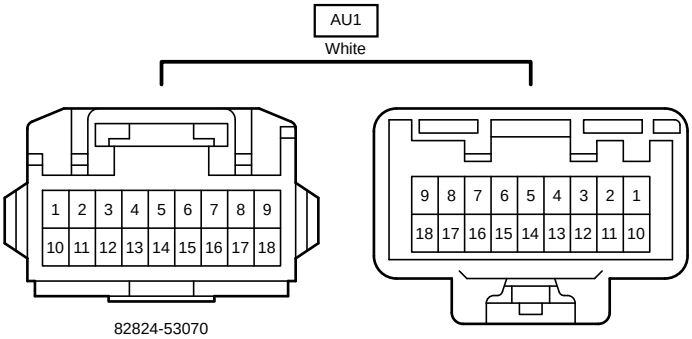

82824-53070

82824-53060

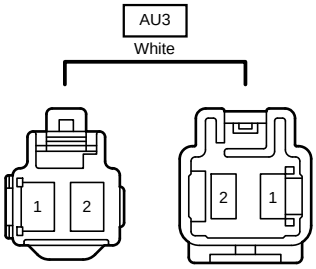

90980-10903

90980-10958