(Cont. next page)

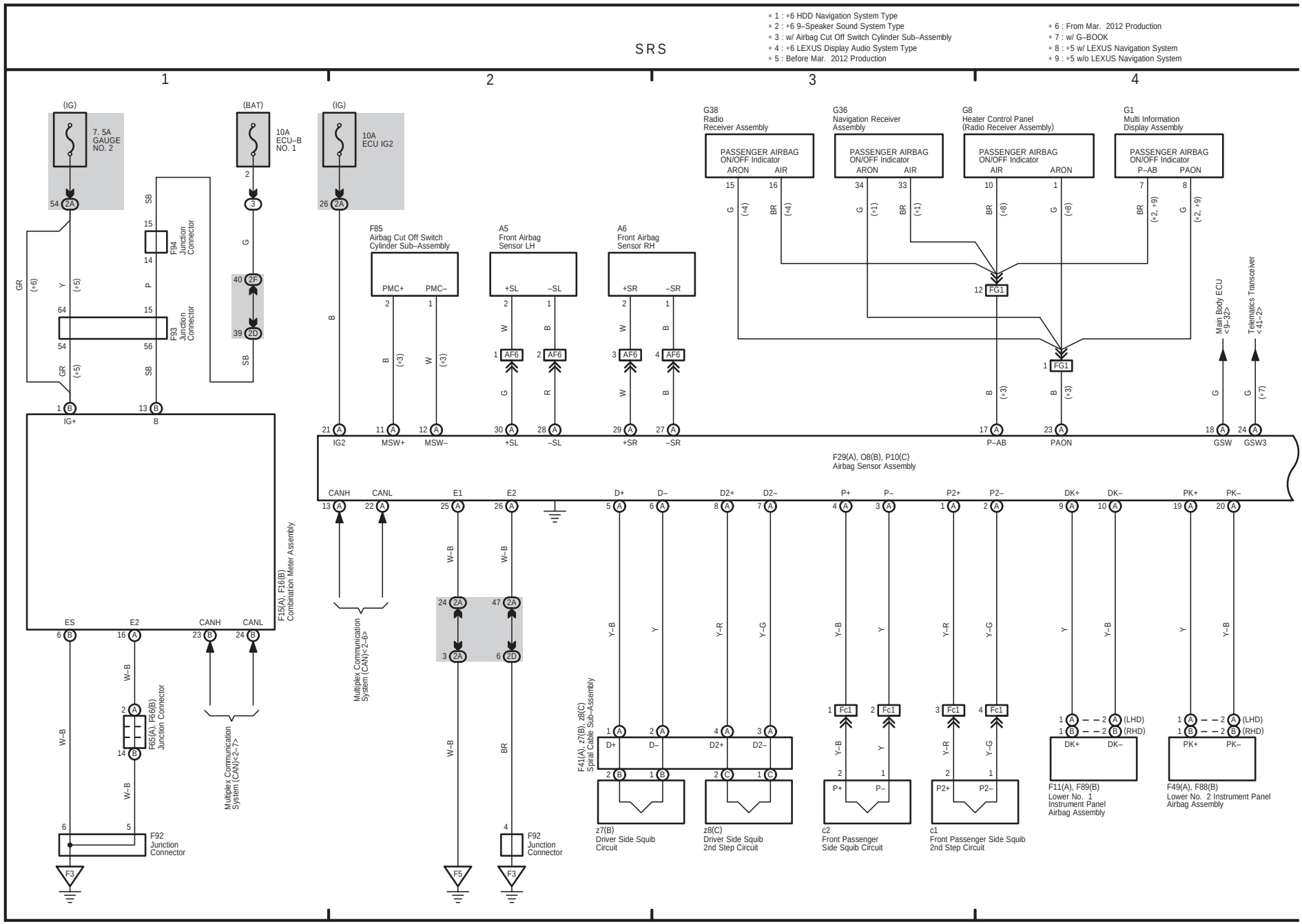

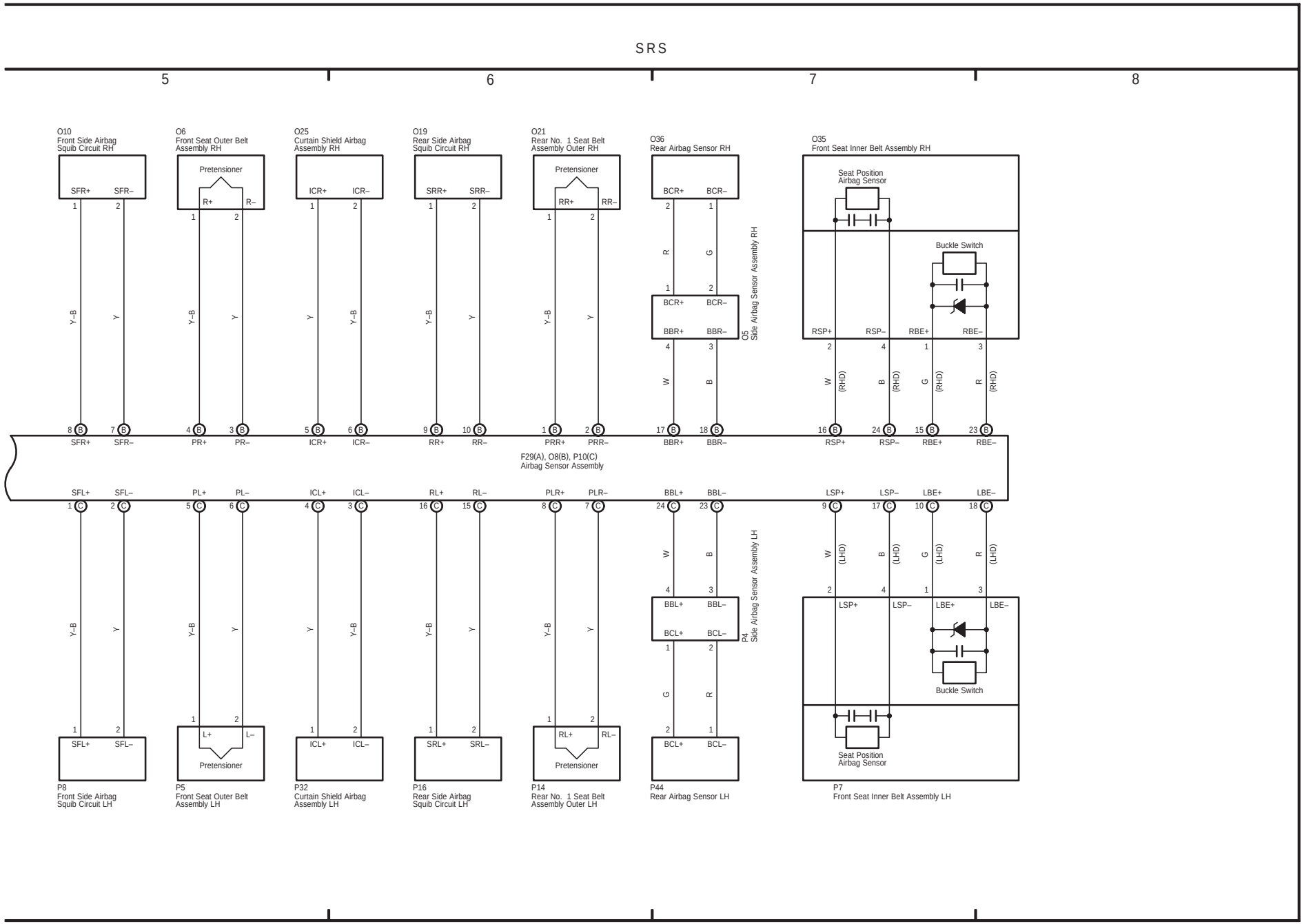
SRS
5
6
7
8
O10
Front Side Airbag
Squib Circuit RH
O6
Front Seat Outer Belt
Assembly RH
Pretensioner
O25
Curtain Shield Airbag
Assembly RH
O19
Rear Side Airbag
Squib Circuit RH
O21
Rear No. 1 Seat Belt
Assembly Outer RH
Pretensioner
O36
Rear Airbag Sensor RH
O35
Front Seat Inner Belt Assembly RH
Seat Position
Airbag Sensor
Buckle Switch
O5
Side Airbag Sensor Assembly RH
F29(A), O8(B), P10(C)
Airbag Sensor Assembly
P4
Side Airbag Sensor Assembly LH
Buckle Switch
Seat Position
Airbag Sensor
P8
Front Side Airbag
Squib Circuit LH
P5
Front Seat Outer Belt
Assembly LH
Pretensioner
P32
Curtain Shield Airbag
Assembly LH
P16
Rear Side Airbag
Squib Circuit LH
P14
Rear No. 1 Seat Belt
Assembly Outer LH
Pretensioner
P44
Rear Airbag Sensor LH
P7
Front Seat Inner Belt Assembly LH