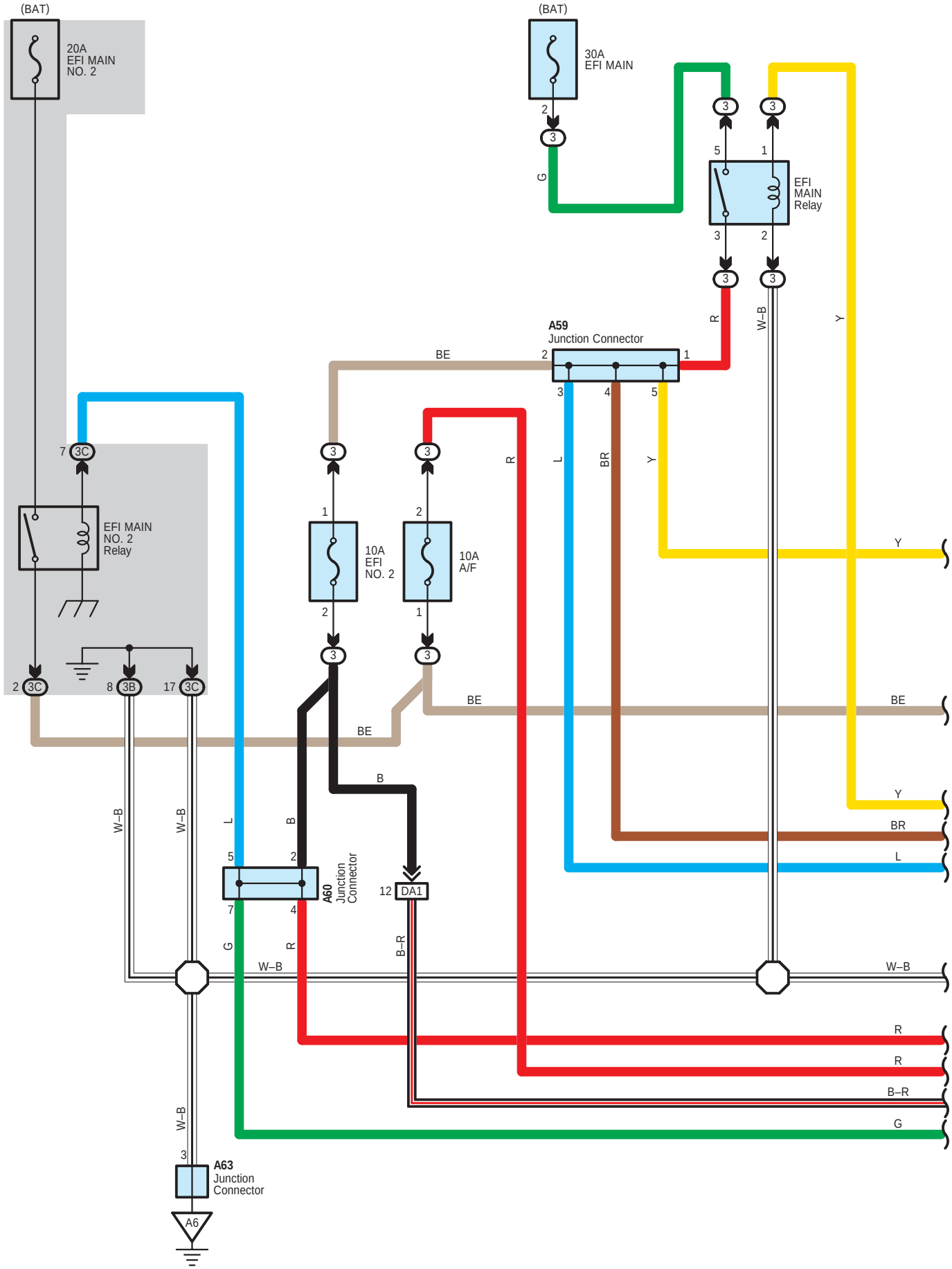
(BAT)
20A
EFI MAIN
NO. 2
(BAT)
30A
EFI MAIN
EFI
MAIN
Relay
A59
Junction Connector
EFI MAIN
NO. 2
Relay
10A
EFI
NO. 2
10A
A/F
A60
Junction
Connector
DA1
A63
Junction
Connector
A6
BE
R
L
BR
Y
B
G
W–B
B–R

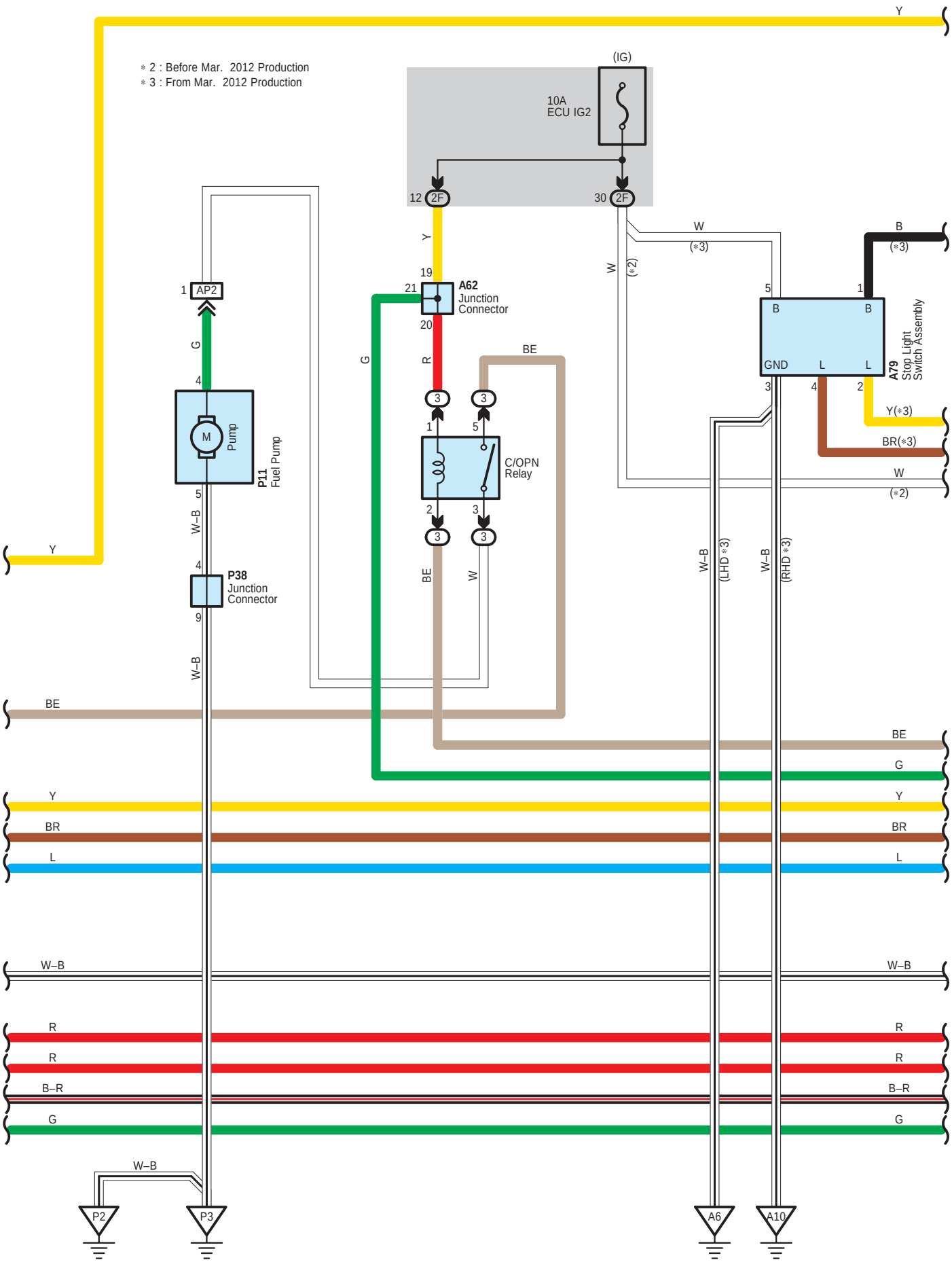
∗ 2 : Before Mar. 2012 Production
∗ 3 : From Mar. 2012 Production
(IG)
10A
ECU IG2
12 2F
30 2F
A62
Junction
Connector
AP2
M
Pump
P11
Fuel Pump
P38
Junction
Connector
C/OPN
Relay
A79
Stop Light
Switch Assembly
GND
W–B
(LHD ∗3)
(RHD ∗3)
(∗2)
(∗3)
P2
P3
A6
A10

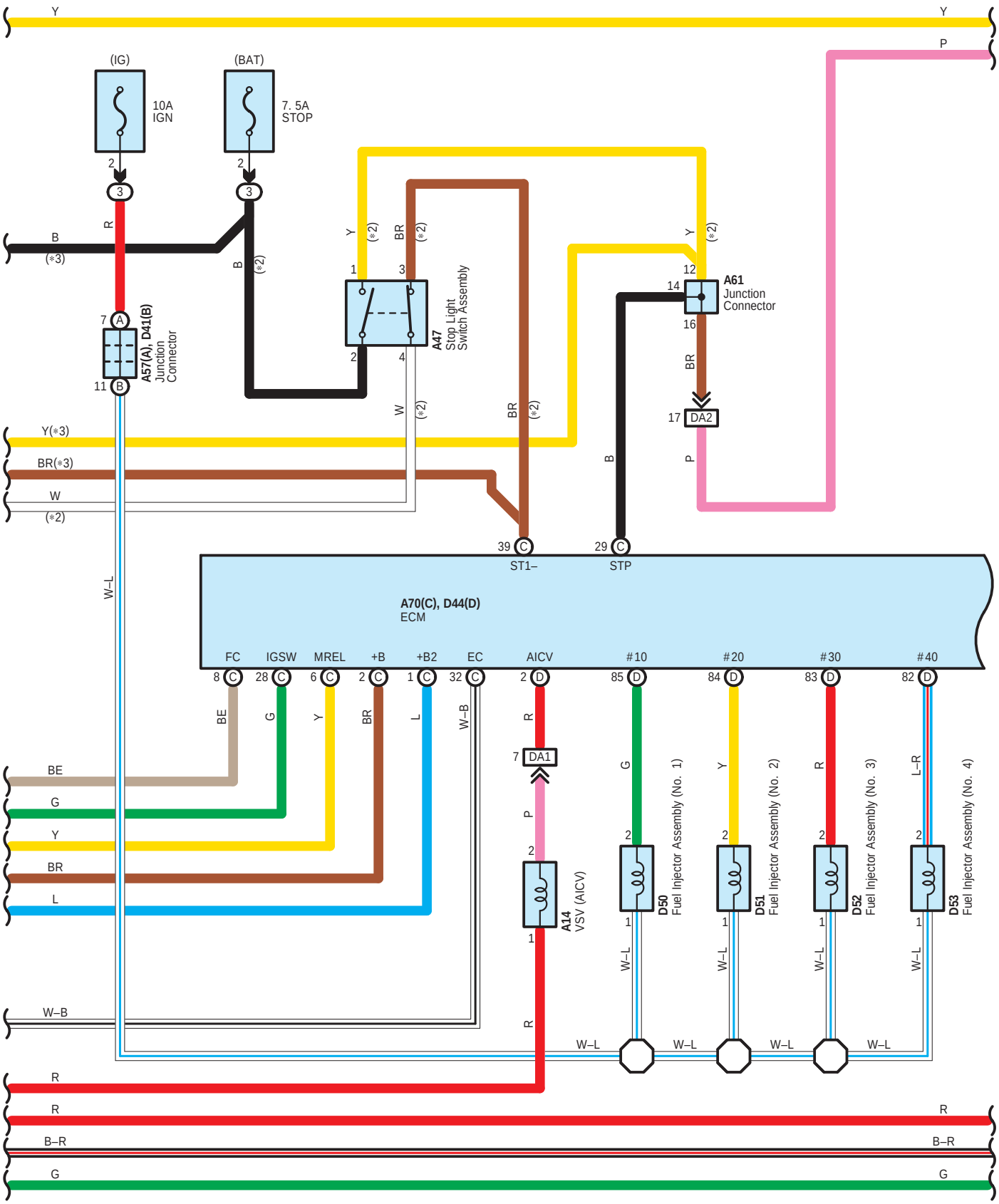
(IG)
(BAT)
10A
IGN
7. 5A
STOP
A57(A), D41(B)
Junction
Connector
A47
Stop Light
Switch Assembly
A61
Junction
Connector
A70(C), D44(D)
ECM
FC
IGSW
MREL
+B
+B2
EC
AICV
#10
#20
#30
#40
ST1–
STP
A14
VSV (AICV)
D50
Fuel Injector Assembly (No. 1)
D51
Fuel Injector Assembly (No. 2)
D52
Fuel Injector Assembly (No. 3)
D53
Fuel Injector Assembly (No. 4)
DA1
DA2

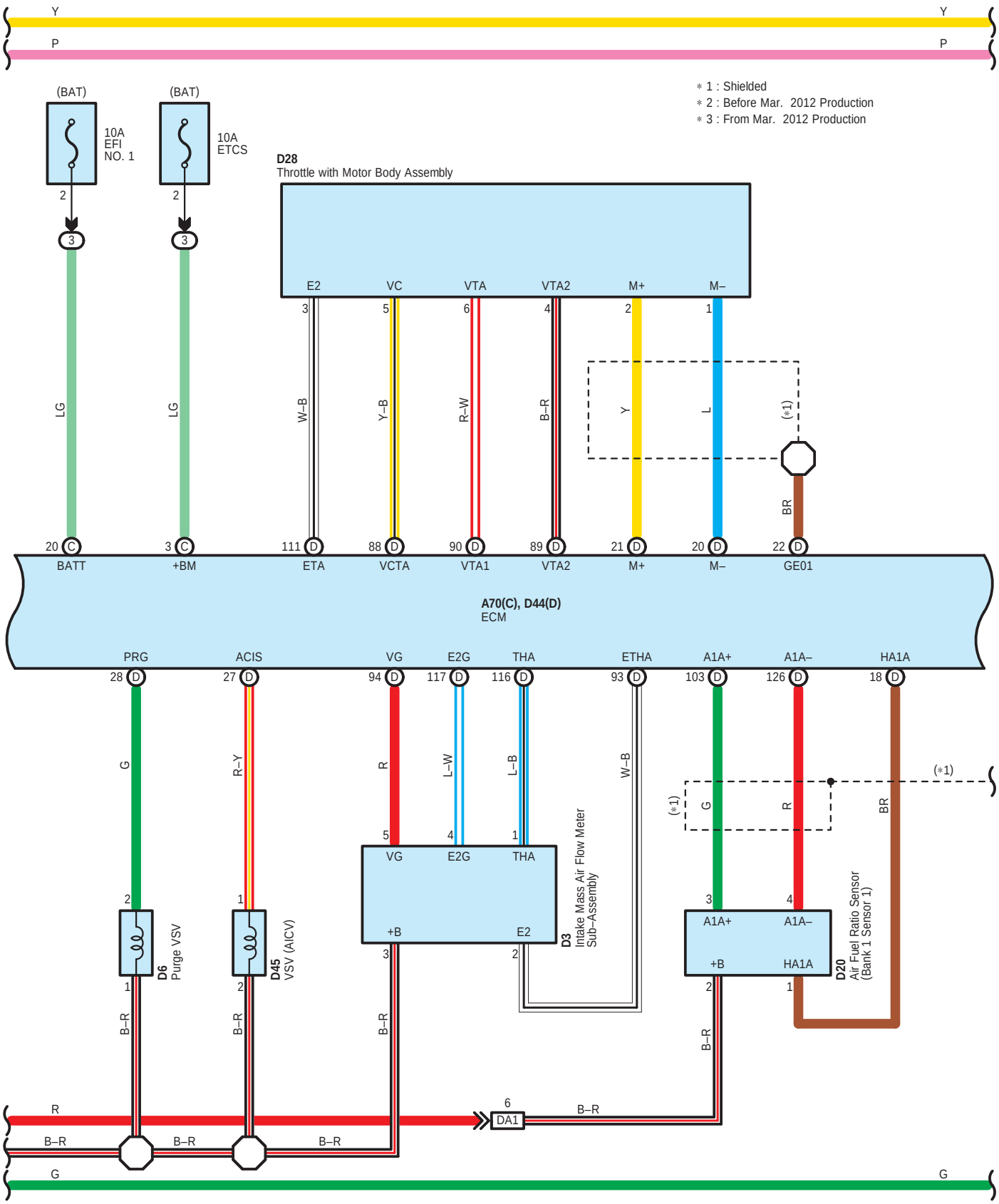
Y
P
(BAT)
10A
EFI
NO. 1
10A
ETCS
∗1 : Shielded
∗2 : Before Mar. 2012 Production
∗3 : From Mar. 2012 Production
D28
Throttle with Motor Body Assembly
E2
VC
VTA
VTA2
M+
M–
LG
W–B
Y–B
R–W
B–R
Y
L
(∗1)
BR
BATT
+BM
ETA
VCTA
VTA1
GE01
A70(C), D44(D)
ECM
PRG
ACIS
VG
E2G
THA
ETHA
A1A+
A1A–
HA1A
G
R–Y
R
L–W
L–B
W–B
D6
Purge VSV
D45
VSV (AICV)
D3
Intake Mass Air Flow Meter
Sub–Assembly
D20
Air Fuel Ratio Sensor
(Bank 1 Sensor 1)
+B
DA1

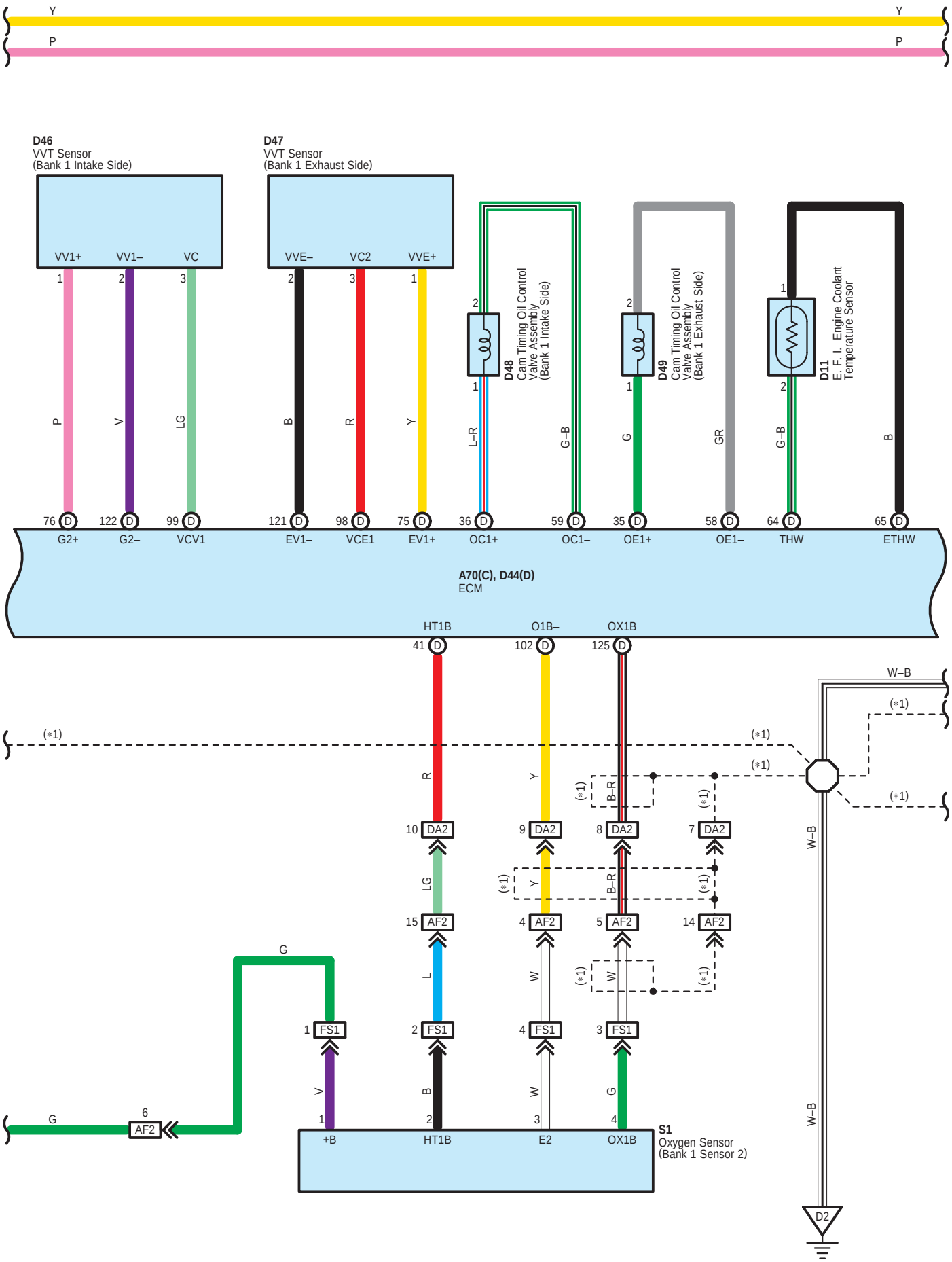
Y
P
D46
VVT Sensor
(Bank 1 Intake Side)
VV1+
VV1–
VC
D47
VVT Sensor
(Bank 1 Exhaust Side)
VVE–
VC2
VVE+
D48
Cam Timing Oil Control
Valve Assembly
(Bank 1 Intake Side)
D49
Cam Timing Oil Control
Valve Assembly
(Bank 1 Exhaust Side)
D11
E. F. I. Engine Coolant
Temperature Sensor
76 G2+
122 G2–
99 VCV1
121 EV1–
98 VCE1
75 EV1+
36 OC1+
59 OC1–
35 OE1+
58 OE1–
64 THW
65 ETHW
A70(C), D44(D)
ECM
HT1B
O1B–
OX1B
41
102
125
W–B
(*1)
DA2
AF2
FS1
G
S1
Oxygen Sensor
(Bank 1 Sensor 2)
+B
HT1B
E2
OX1B
D2

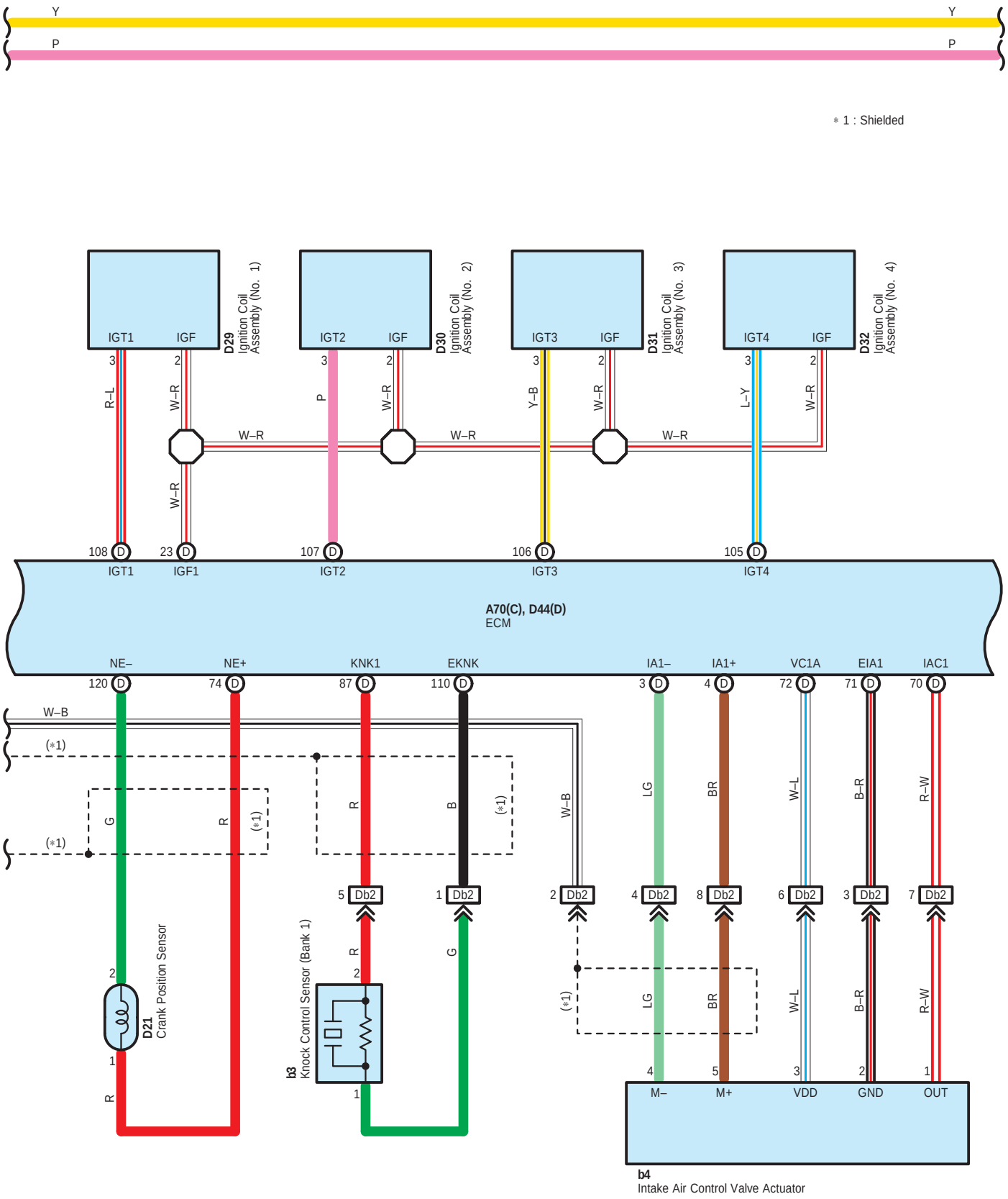
Y
P
Y
P
* 1 : Shielded
IGT1
IGF
D29
Ignition Coil Assembly (No. 1)
IGT2
IGF
D30
Ignition Coil Assembly (No. 2)
IGT3
IGF
D31
Ignition Coil Assembly (No. 3)
IGT4
IGF
D32
Ignition Coil Assembly (No. 4)
R–L
W–R
P
Y–B
L–Y
108
23
107
106
105
IGT1
IGF1
IGT2
IGT3
IGT4
A70(C), D44(D)
ECM
NE–
NE+
KNK1
EKNK
IA1–
IA1+
VC1A
EIA1
IAC1
120
74
87
110
3
4
72
71
70
W–B
(*1)
G
R
B
LG
BR
W–L
B–R
R–W
Db2
D21
Crank Position Sensor
b3
Knock Control Sensor (Bank 1)
M–
M+
VDD
GND
OUT
b4
Intake Air Control Valve Actuator

Y
Y
P
P

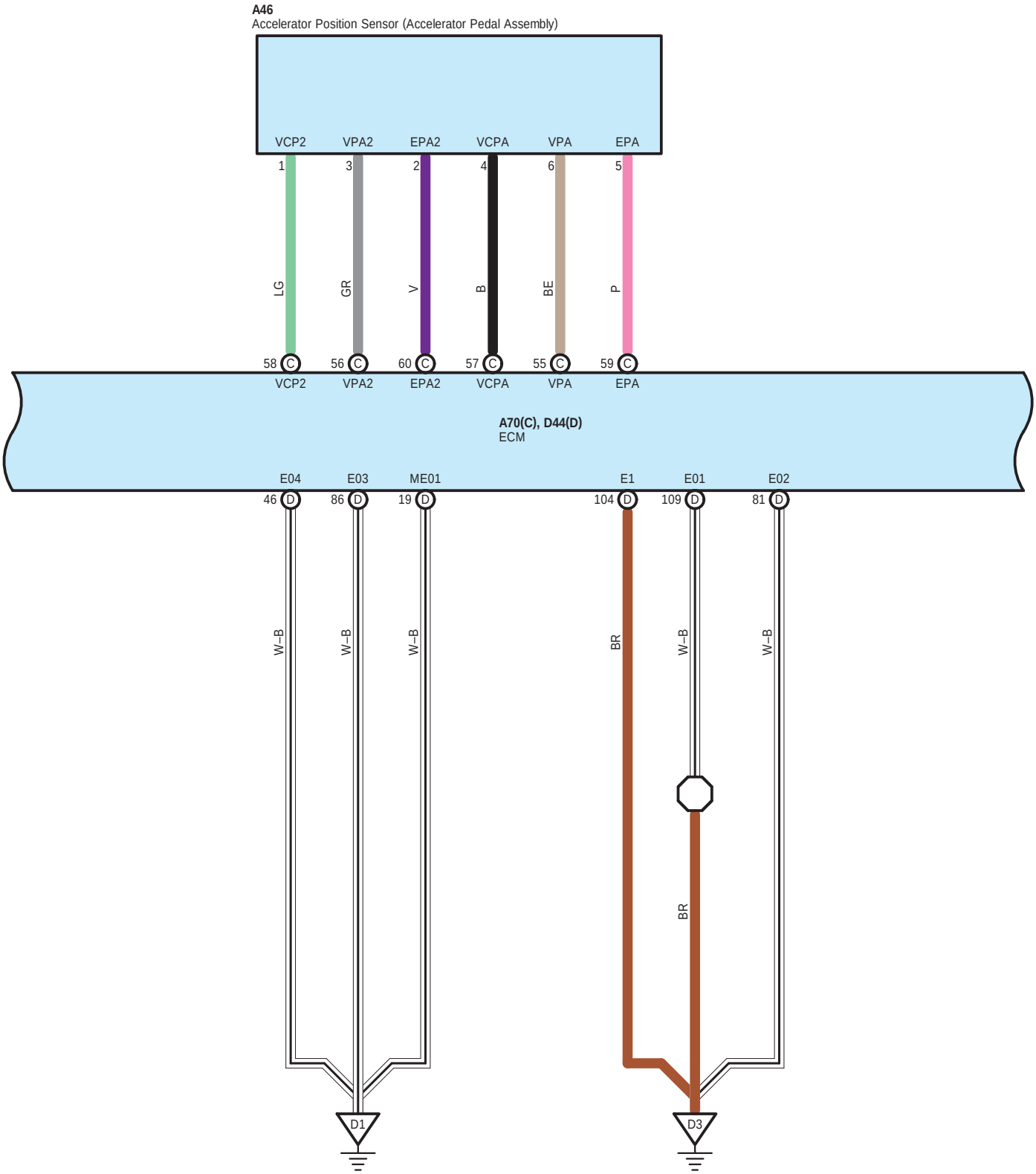
A46
Accelerator Position Sensor (Accelerator Pedal Assembly)
VCP2
VPA2
EPA2
VCPA
VPA
EPA
1
3
2
4
6
5
LG
GR
V
B
BE
P
58 C
56 C
60 C
57 C
55 C
59 C
VCP2
VPA2
EPA2
VCPA
VPA
EPA
A70(C), D44(D)
ECM
E04
E03
ME01
E1
E01
E02
46 D
86 D
19 D
104 D
109 D
81 D
W-B
W-B
W-B
BR
W-B
W-B
BR
D1
D3

∗ 2 : Before Mar. 2012 Production
∗ 3 : From Mar. 2012 Production

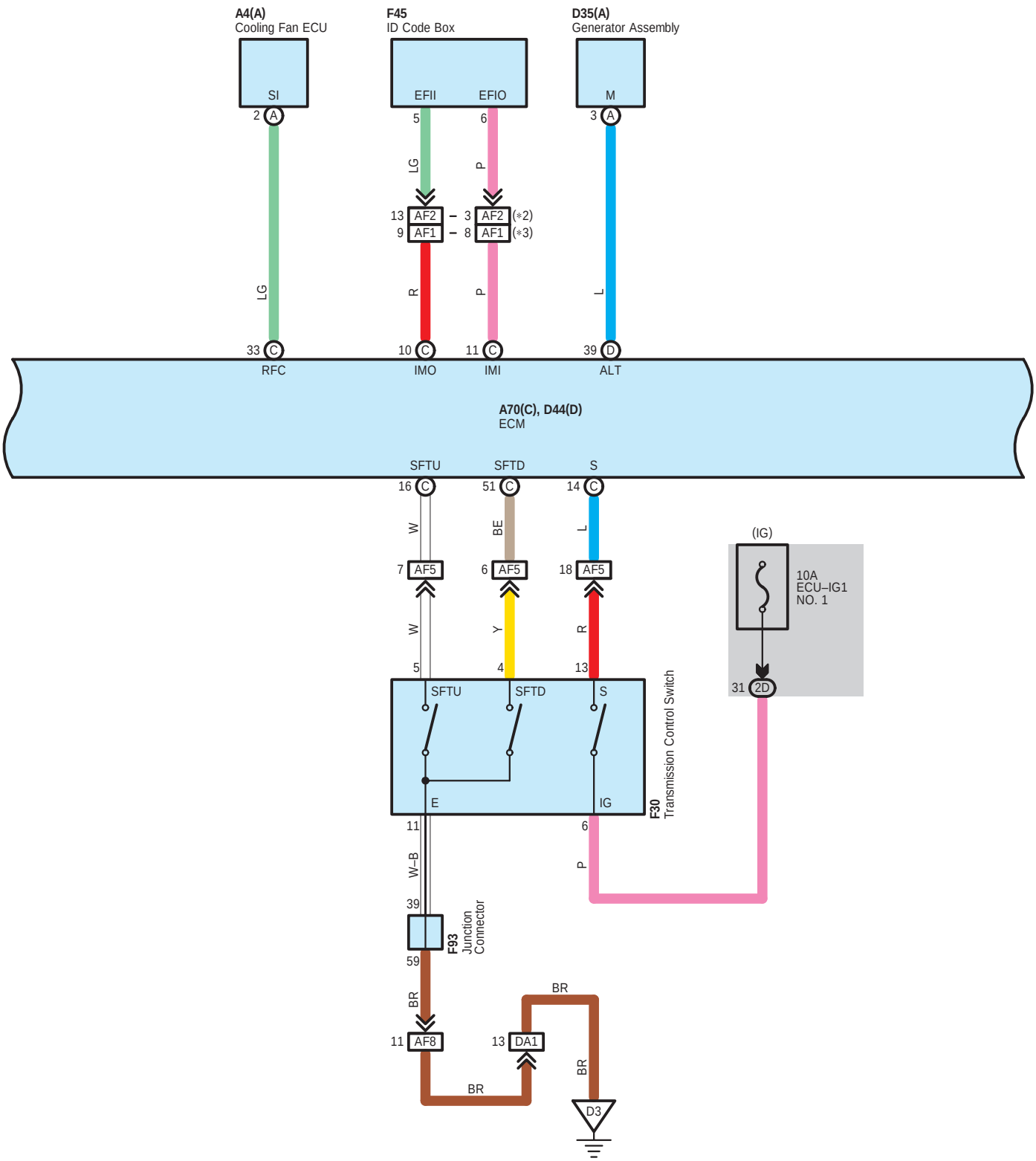

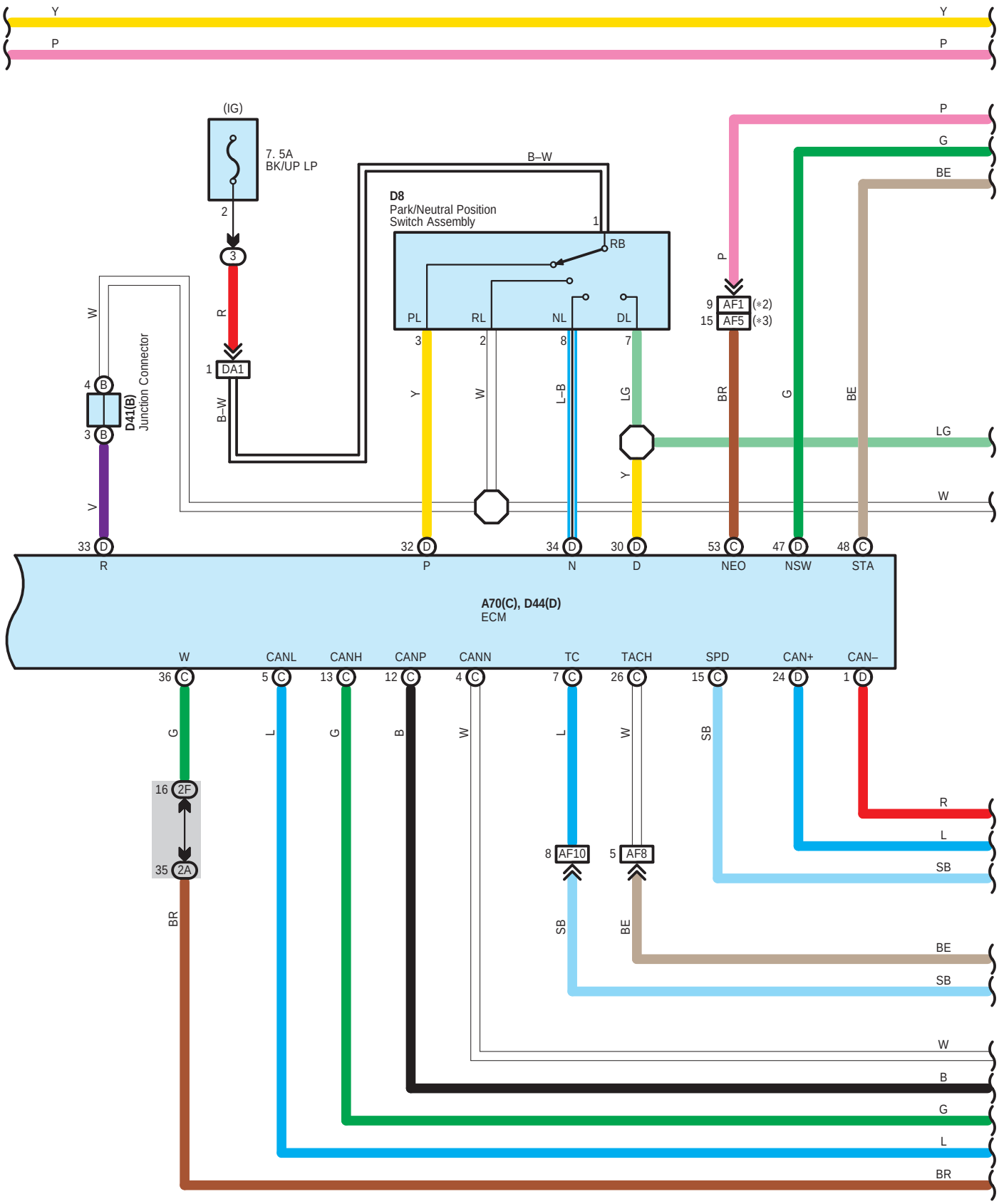
Y
P
(IG)
7. 5A
BK/UP LP
2
3
R
1 DA1
B–W
W
4 B
3 B
D41(B)
Junction Connector
V
B–W
D8
Park/Neutral Position
Switch Assembly
1
RB
PL
RL
NL
DL
3
2
8
7
Y
W
L–B
LG
Y
P
9 AF1 (*2)
15 AF5 (*3)
BR
G
BE
LG
W
33 D
32 D
34 D
30 D
53 C
47 D
48 C
R
P
N
D
NEO
NSW
STA
A70(C), D44(D)
ECM
W
CANL
CANH
CANP
CANN
TC
TACH
SPD
CAN+
CAN–
36 C
5 C
13 C
12 C
4 C
7 C
26 C
15 C
24 D
1 D
G
L
G
B
W
L
W
SB
16 2F
35 2A
8 AF10
5 AF8
BR
SB
BE
R
L
SB
BE
SB
W
B
G
L
BR

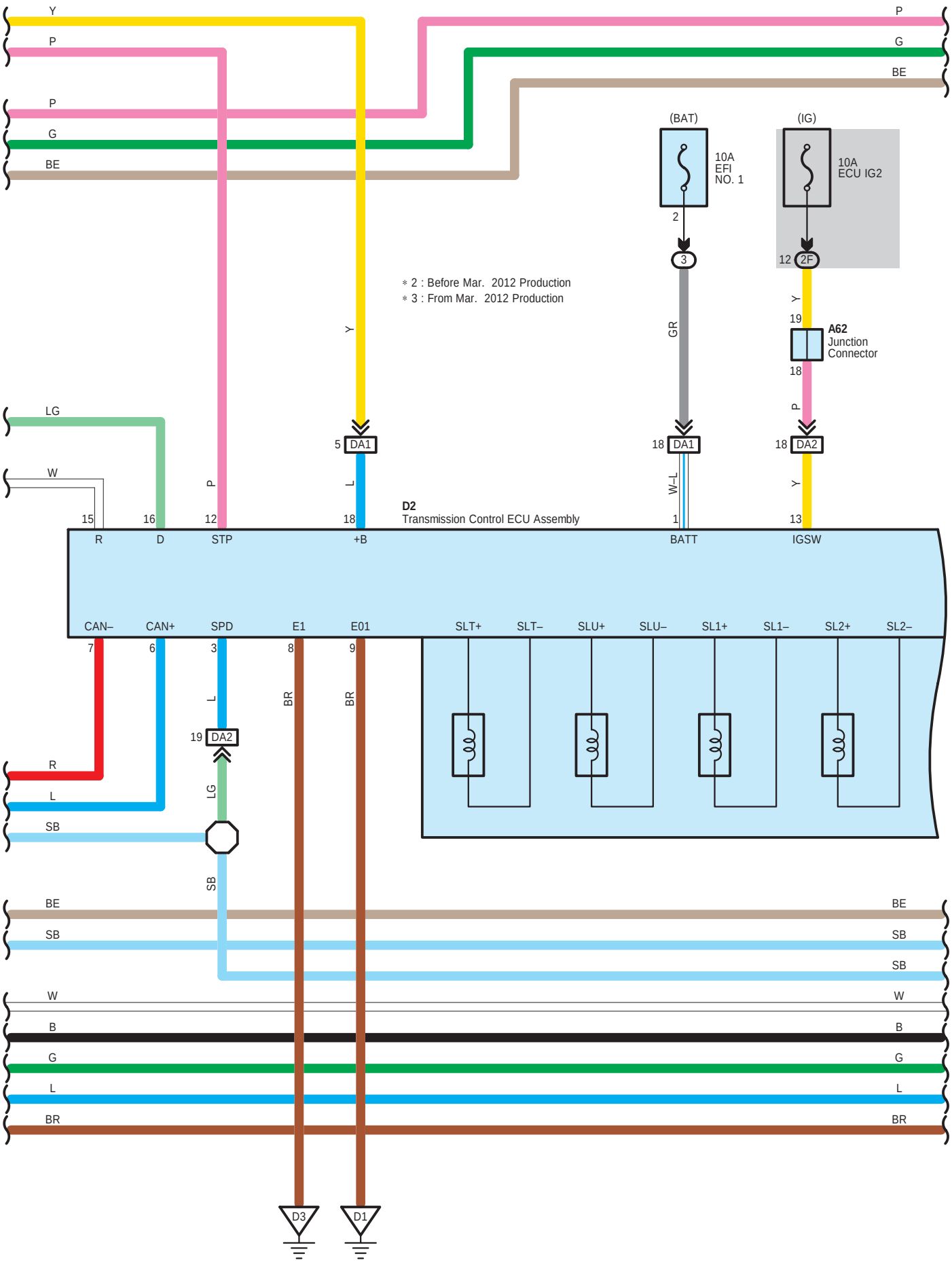
Y
P
P
G
BE
P
G
BE
(BAT)
10A
EFI
NO. 1
2
3
(IG)
10A
ECU IG2
12
2F
* 2 : Before Mar. 2012 Production
* 3 : From Mar. 2012 Production
Y
GR
Y
19
A62
Junction
Connector
18
P
LG
5
DA1
18
DA1
18
DA2
W
P
L
W–L
Y
D2
Transmission Control ECU Assembly
15
16
12
18
1
13
R
D
STP
+B
BATT
IGSW
CAN–
CAN+
SPD
E1
E01
SLT+
SLT–
SLU+
SLU–
SL1+
SL1–
SL2+
SL2–
7
6
3
8
9
L
BR
BR
19
DA2
R
L
LG
SB
SB
BE
SB
W
B
G
L
BR
BE
SB
SB
W
B
G
L
BR
D3
D1

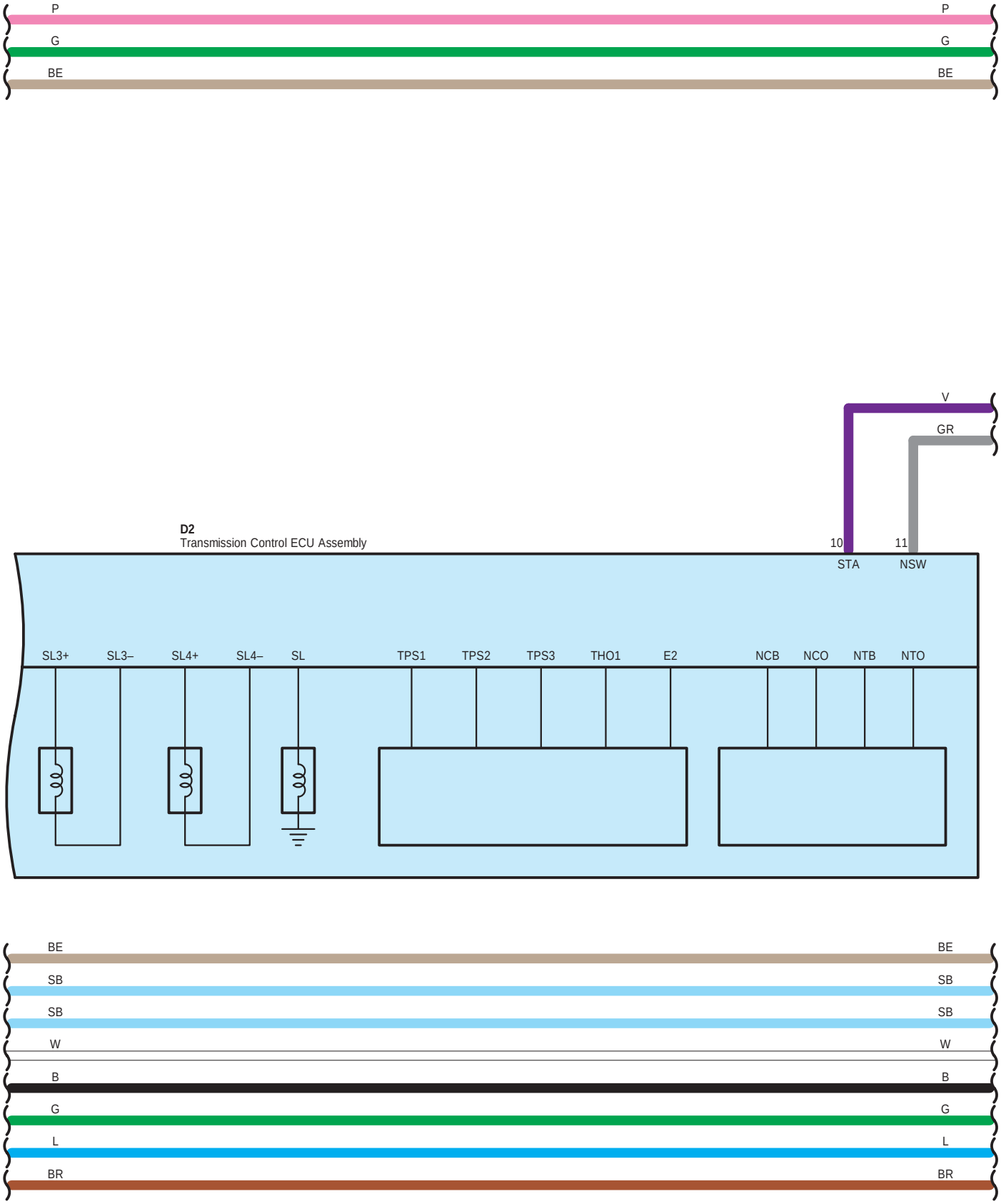
P
P
G
G
BE
BE
V
GR
D2
Transmission Control ECU Assembly
10
11
STA
NSW
SL3+
SL3–
SL4+
SL4–
SL
TPS1
TPS2
TPS3
THO1
E2
NCB
NCO
NTB
NTO
BE
BE
SB
SB
SB
SB
W
W
B
B
G
G
L
L
BR
BR

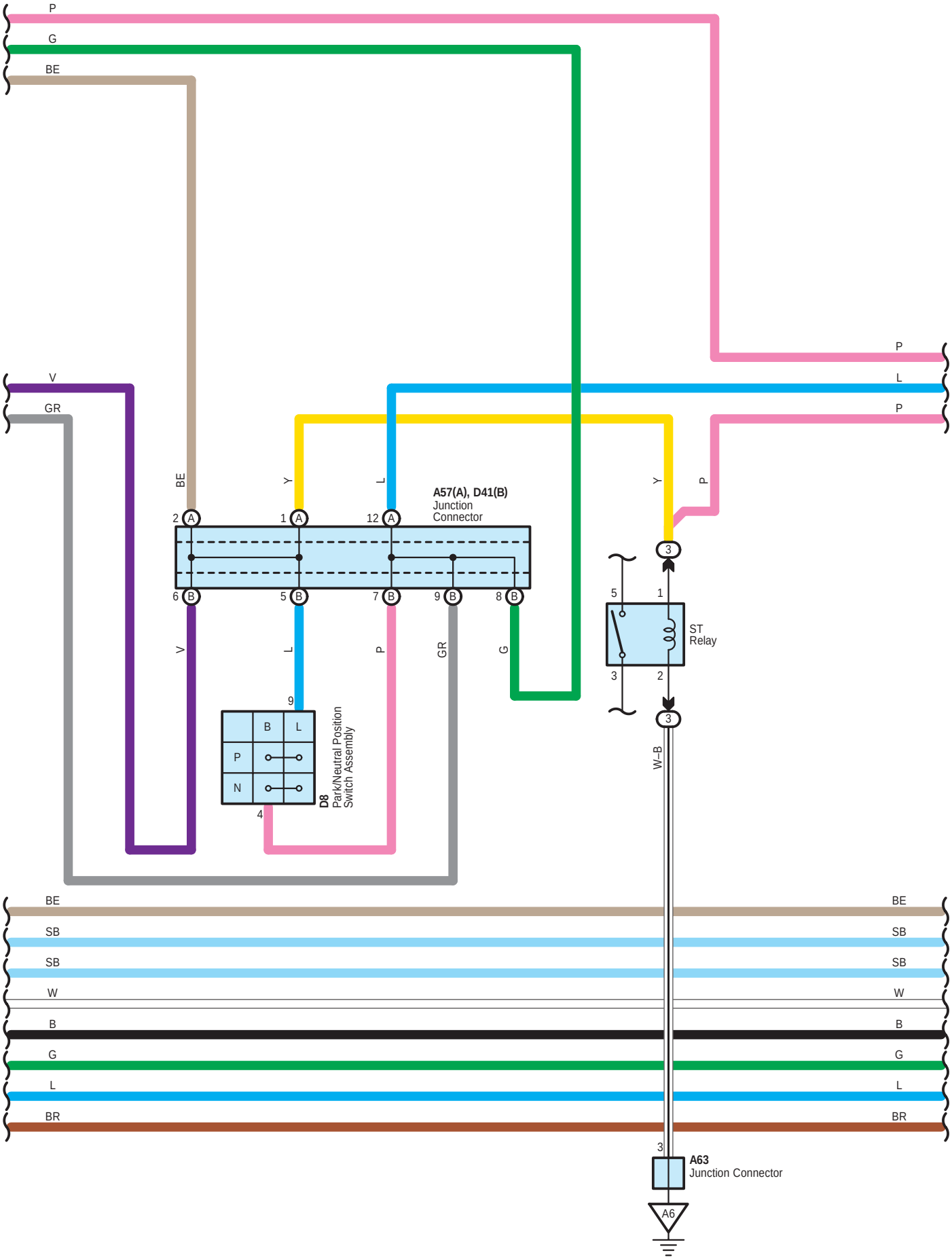
P
G
BE
V
GR
P
L
P
BE
Y
L
A57(A), D41(B)
Junction
Connector
Y
P
2 A
1 A
12 A
6 B
5 B
7 B
9 B
8 B
3
5
1
ST
Relay
3
2
3
V
L
P
GR
G
9
B
L
P
N
D8
Park/Neutral Position
Switch Assembly
4
W–B
BE
SB
SB
W
B
G
L
BR
BE
SB
SB
W
B
G
L
BR
3
A63
Junction Connector
A6

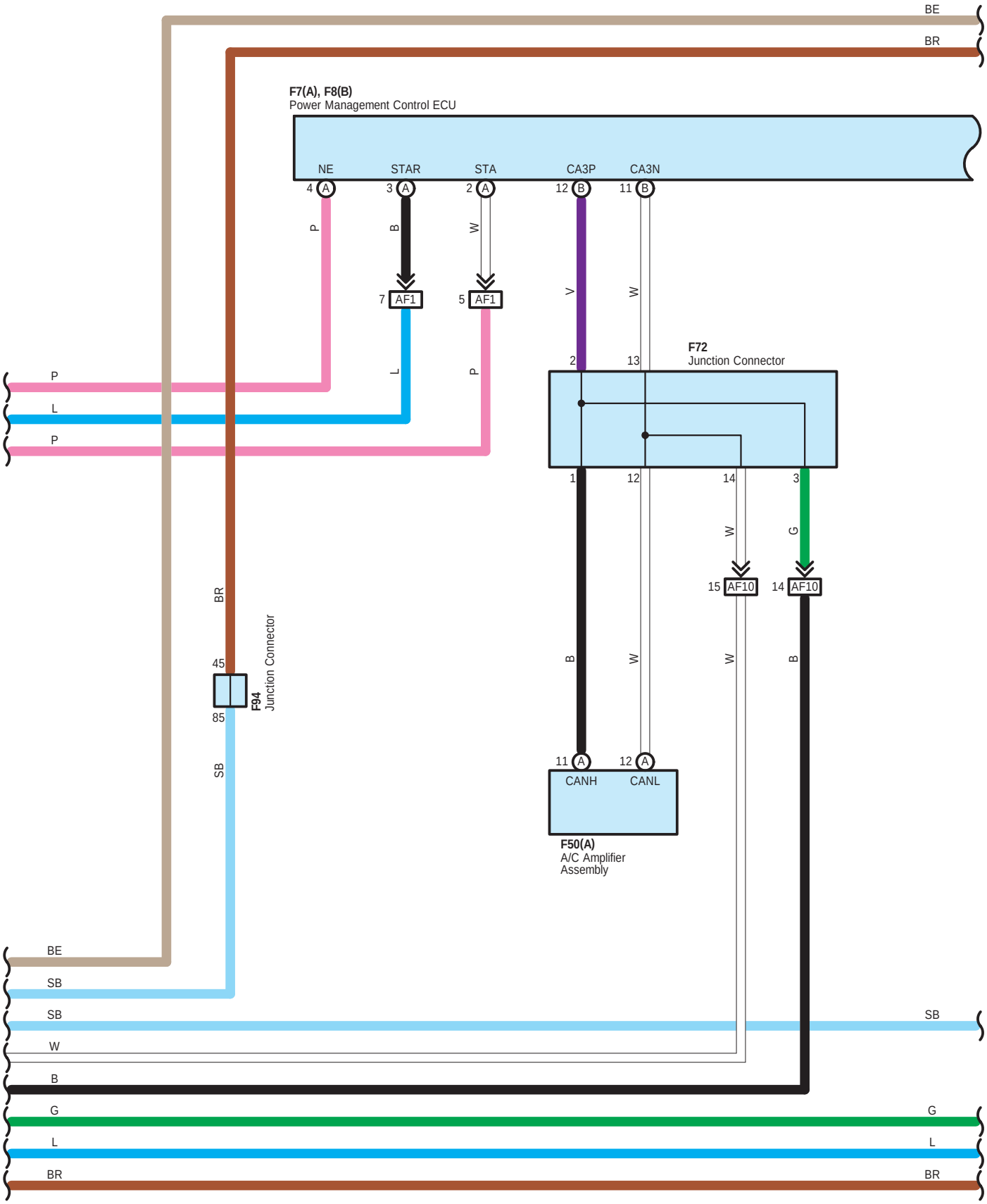
BE
BR
F7(A), F8(B)
Power Management Control ECU
NE
STAR
STA
CA3P
CA3N
4 A
3 A
2 A
12 B
11 B
P
B
W
V
W
7 AF1
5 AF1
F72
Junction Connector
2
13
P
L
P
1
12
14
3
W
G
15 AF10
14 AF10
BR
45
85
F94
Junction Connector
B
W
W
B
SB
11 A
12 A
CANH
CANL
F50(A)
A/C Amplifier
Assembly
BE
SB
SB
SB
W
B
G
G
L
L
BR
BR

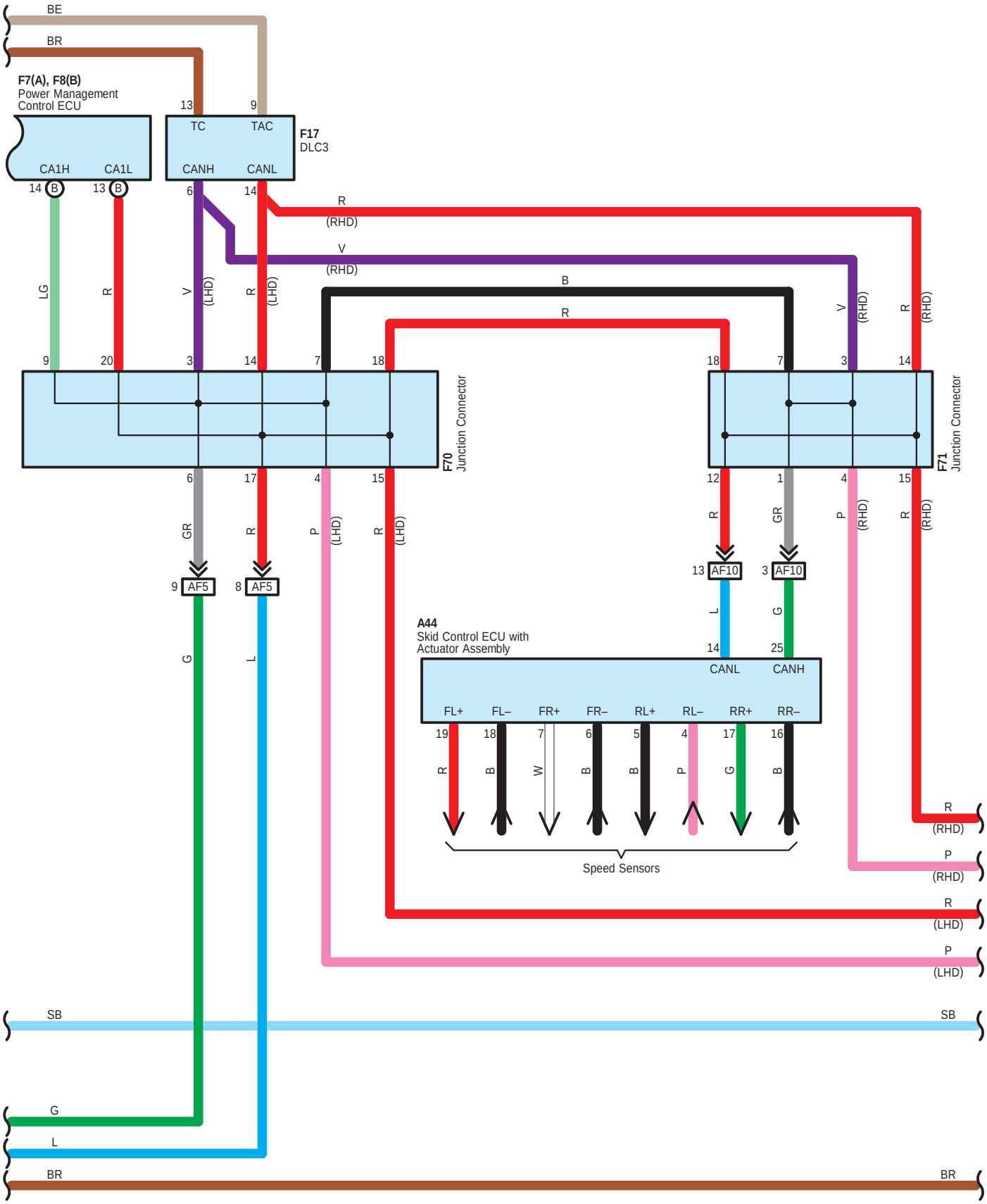
BE
BR
F7(A), F8(B)
Power Management
Control ECU
CA1H
CA1L
14 B
13 B
13
9
TC
TAC
F17
DLC3
CANH
CANL
6
14
R
(RHD)
V
(RHD)
LG
R
V
(LHD)
R
(LHD)
B
R
V
(RHD)
R
(RHD)
9
20
3
14
7
18
18
7
3
14
F70
Junction Connector
F71
Junction Connector
6
17
4
15
12
1
4
15
GR
R
P
(LHD)
R
(LHD)
R
GR
P
(RHD)
R
(RHD)
9 AF5
8 AF5
13 AF10
3 AF10
L
G
A44
Skid Control ECU with
Actuator Assembly
14
25
CANL
CANH
FL+
FL–
FR+
FR–
RL+
RL–
RR+
RR–
19
18
7
6
5
4
17
16
R
B
W
B
B
P
G
B
Speed Sensors
R
(RHD)
P
(RHD)
R
(LHD)
P
(LHD)
G
L
SB
SB
G
L
BR
BR

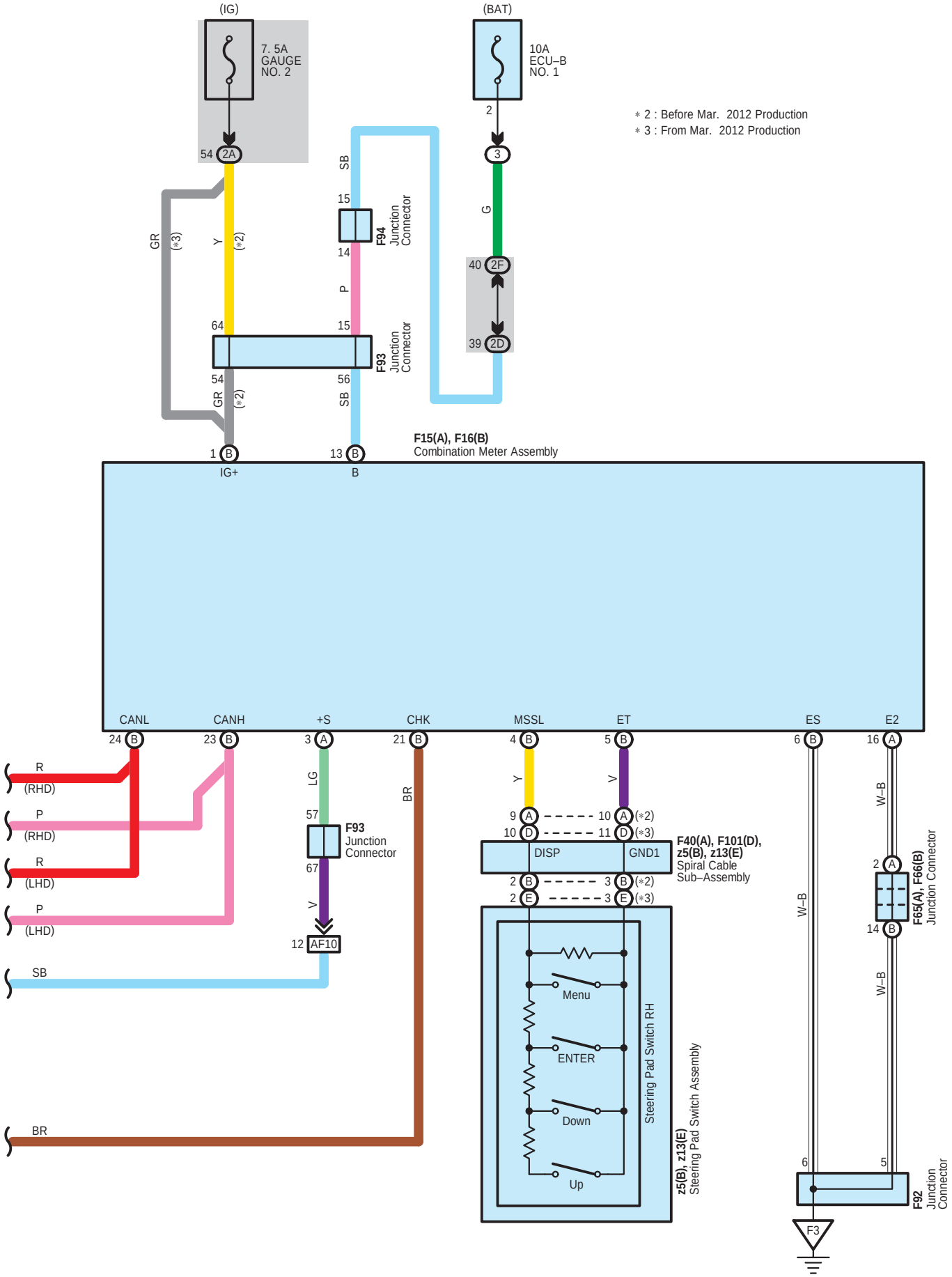
(IG)
7. 5A
GAUGE
NO. 2
(BAT)
10A
ECU–B
NO. 1
∗ 2 : Before Mar. 2012 Production
∗ 3 : From Mar. 2012 Production
F94
Junction
Connector
F93
Junction
Connector
F15(A), F16(B)
Combination Meter Assembly
IG+
B
CANL
CANH
+S
CHK
MSSL
ET
ES
E2
R
(RHD)
P
(RHD)
R
(LHD)
P
(LHD)
SB
BR
F93
Junction
Connector
AF10
DISP
GND1
F40(A), F101(D),
z5(B), z13(E)
Spiral Cable
Sub–Assembly
Menu
ENTER
Down
Up
Steering Pad Switch RH
z5(B), z13(E)
Steering Pad Switch Assembly
F65(A), F66(B)
Junction Connector
F92
Junction
Connector
F3

A 4
Black

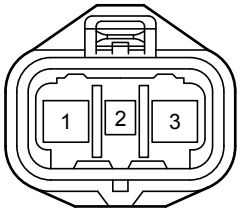


A 14
Black

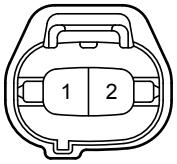


A 44
Black

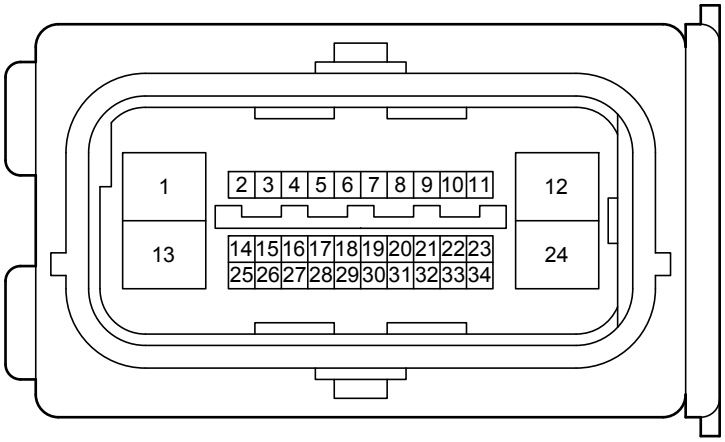


A 46
Black

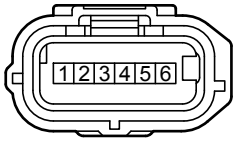


A 47
Green

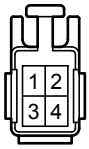


A 57
Black

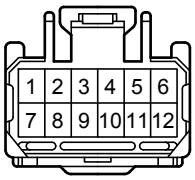


A 59
Black

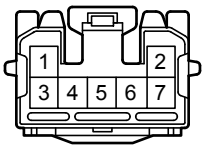


A 60
White

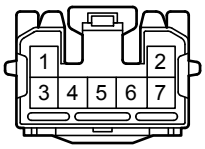


A 61
Black

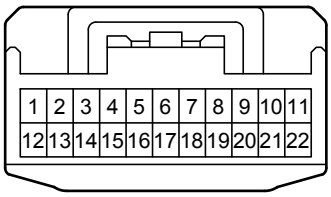


A 62
Black

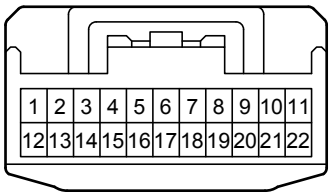


A 63
White

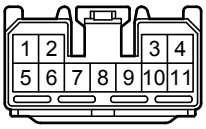

A 70
Black

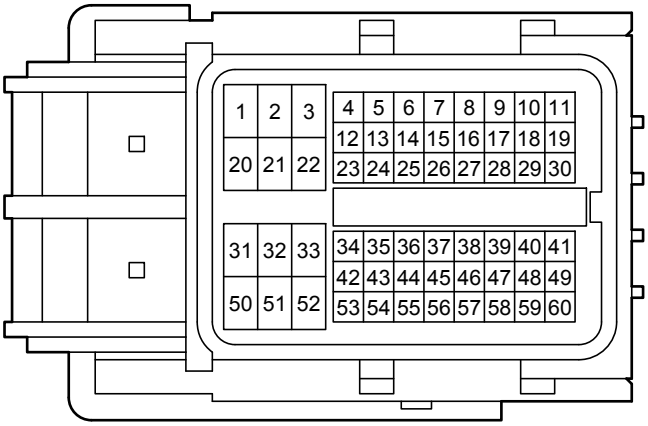


A 79
White

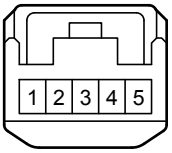


D 2
Gray

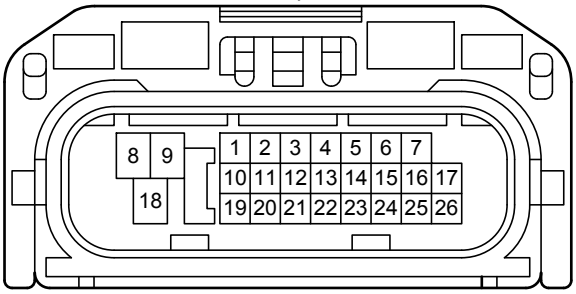


D 3
Black

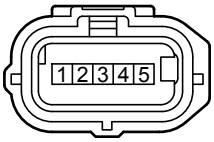


D 6
Black

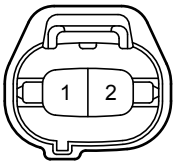


D 8
Gray

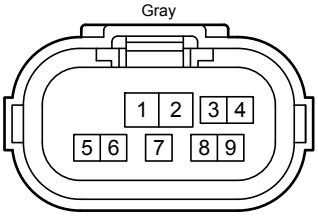


D 11
Gray

D 20
Dark Gray

D 21
Black

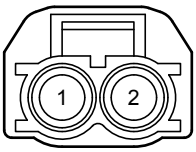


D 28
Black

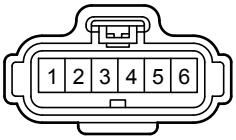


D 29
Black

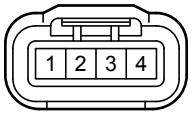


D 30
Black

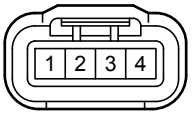


D 31
Black

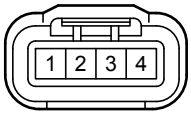


D 32
Black

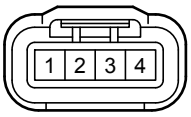


D 35
Black

D 41
Black

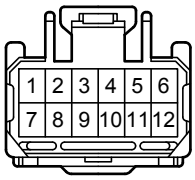

D 44
Black

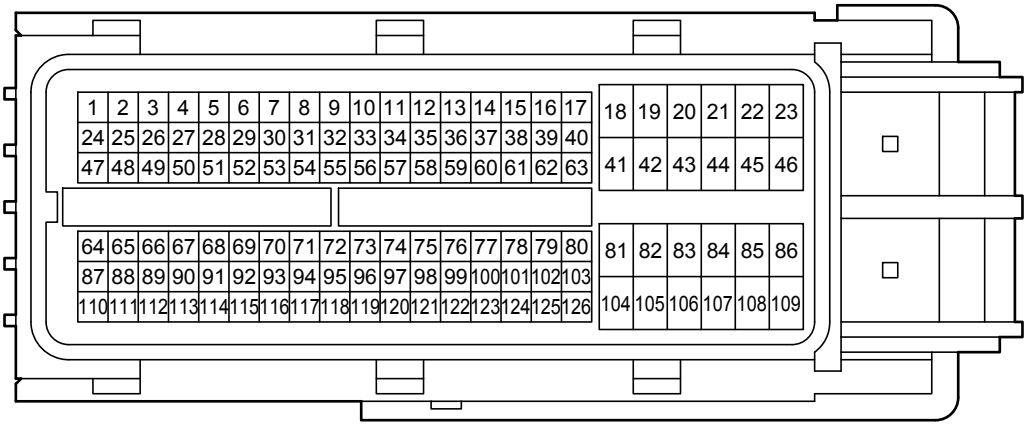


D 45
Blue

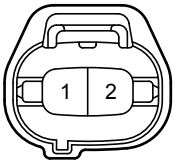


D 46
Black

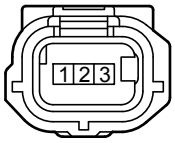


D 47
Gray

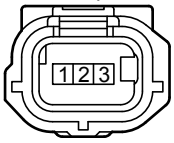


D 48
Black

D 49
Gray

D 50
Black

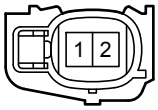


D 51
Gray

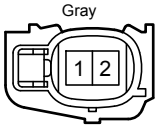


D 52
Black

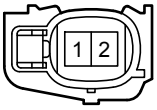


D 53
Gray

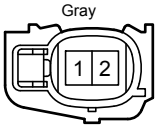


F 7
Gray

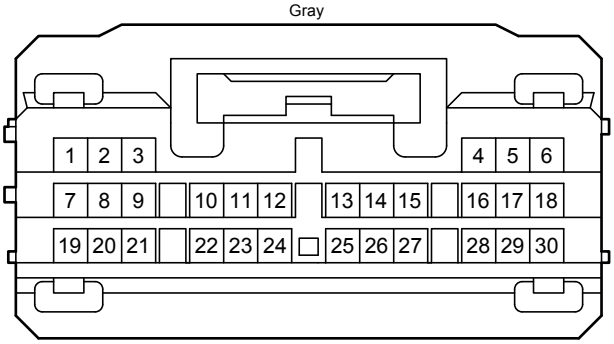


F 8
Black

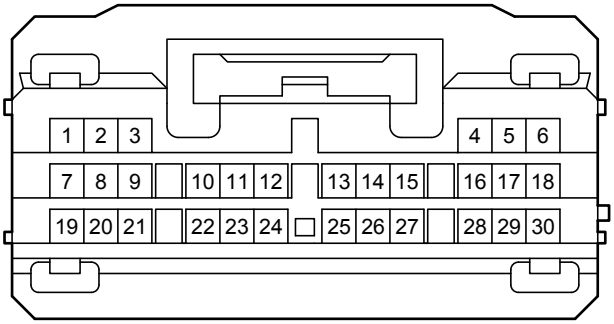


F 15
Black

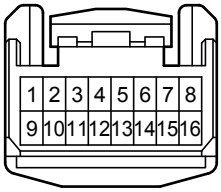

F 16
Black

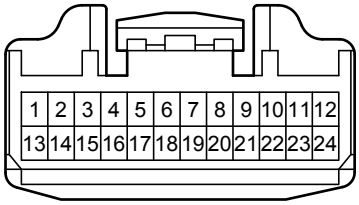


F 17
White

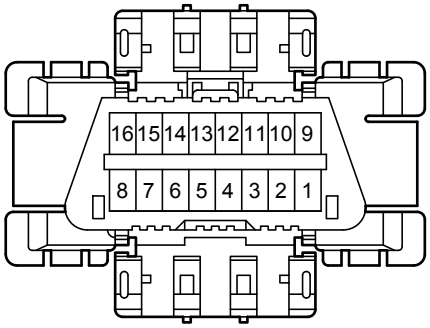


F 30
White

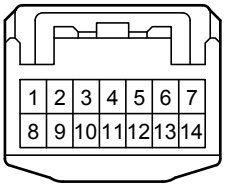


F 40
Black

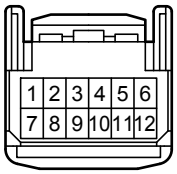


F 45
White

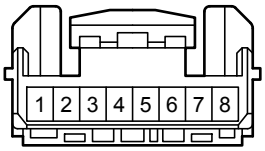


F 50
White

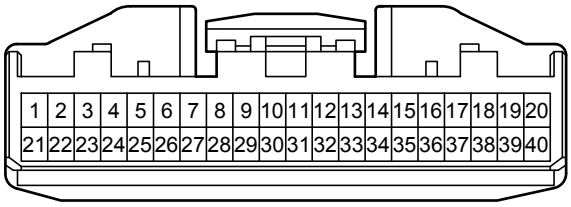


F 65
White

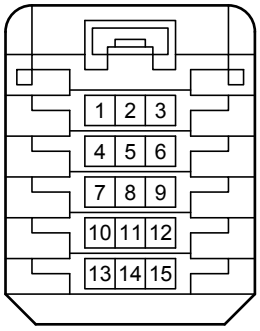


F 66
White

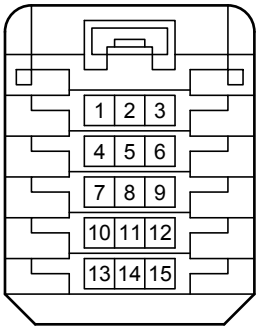


F 70
Blue

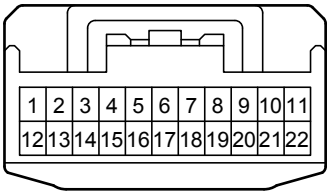


F 71
Blue

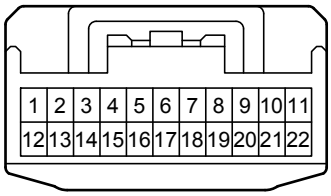


F 72
White

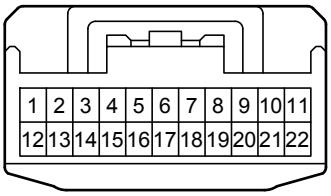


F 92
White

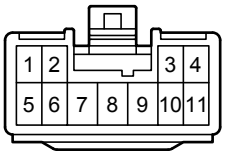

F 93
White

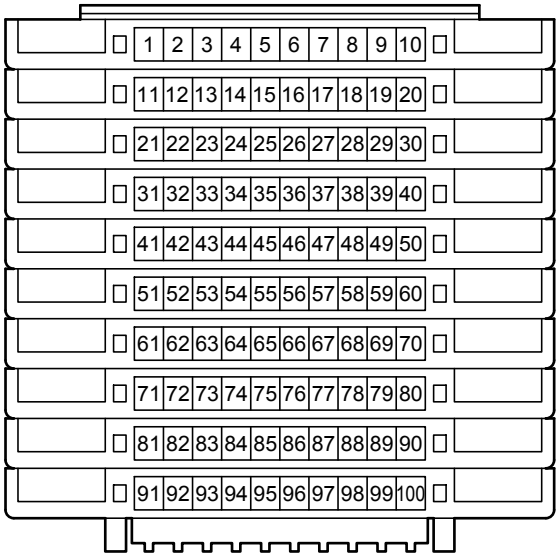


F 94
White

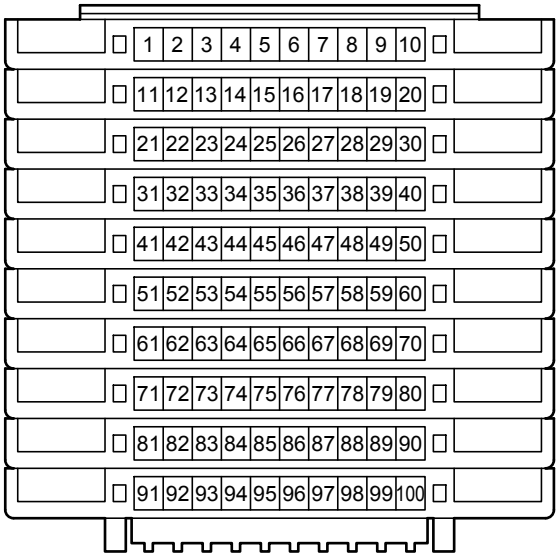


F101
Black

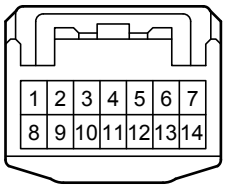


P 11
White

P 38
Black

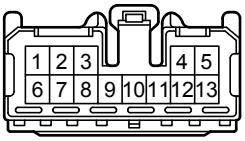


S 1
Gray

b 3
Black

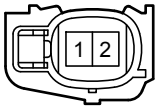


b 4
Black

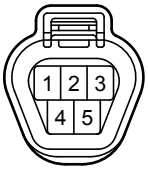


z 5
White

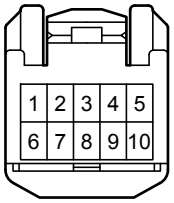


z 13
White

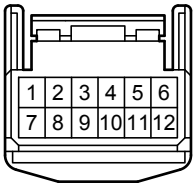


2A
White

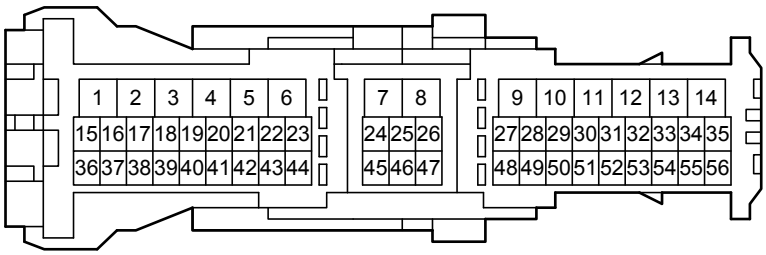


2D
White

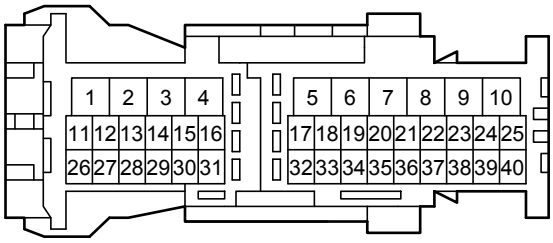


2F
White

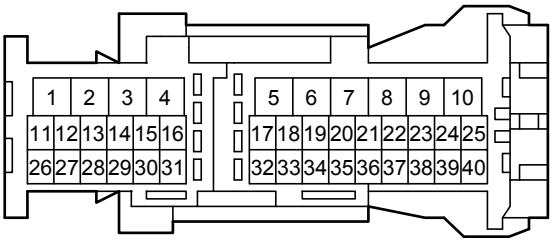

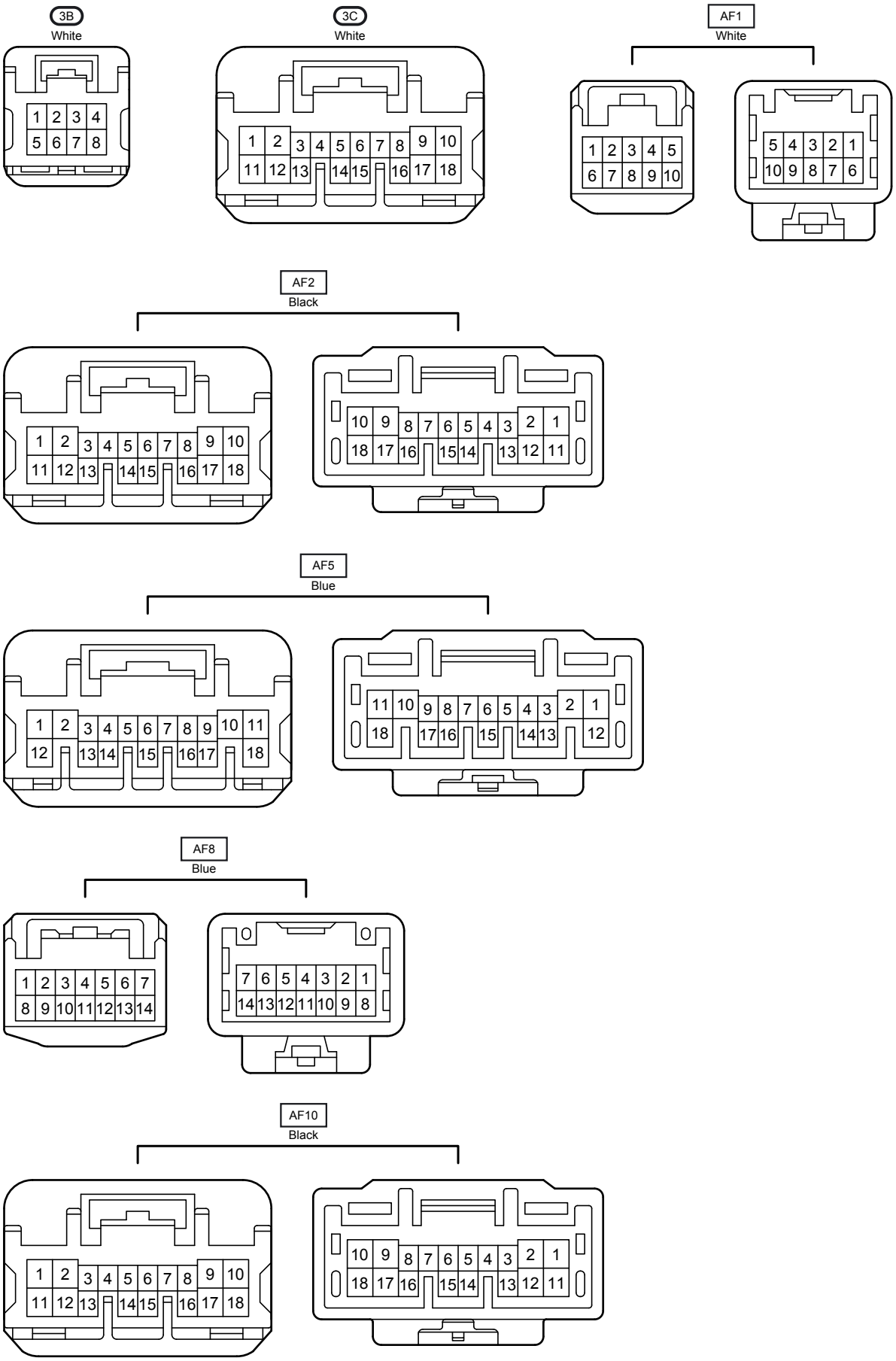
3B
White
1 2 3 4
5 6 7 8
3C
White
1 2 3 4 5 6 7 8 9 10
11 12 13 14 15 16 17 18
AF1
White
1 2 3 4 5
6 7 8 9 10
5 4 3 2 1
10 9 8 7 6
AF2
Black
1 2 3 4 5 6 7 8 9 10
11 12 13 14 15 16 17 18
10 9 8 7 6 5 4 3 2 1
18 17 16 15 14 13 12 11
AF5
Blue
1 2 3 4 5 6 7 8 9 10 11
12 13 14 15 16 17 18
11 10 9 8 7 6 5 4 3 2 1
18 17 16 15 14 13 12
AF8
Blue
1 2 3 4 5 6 7
8 9 10 11 12 13 14
7 6 5 4 3 2 1
14 13 12 11 10 9 8
AF10
Black
1 2 3 4 5 6 7 8 9 10
11 12 13 14 15 16 17 18
10 9 8 7 6 5 4 3 2 1
18 17 16 15 14 13 12 11

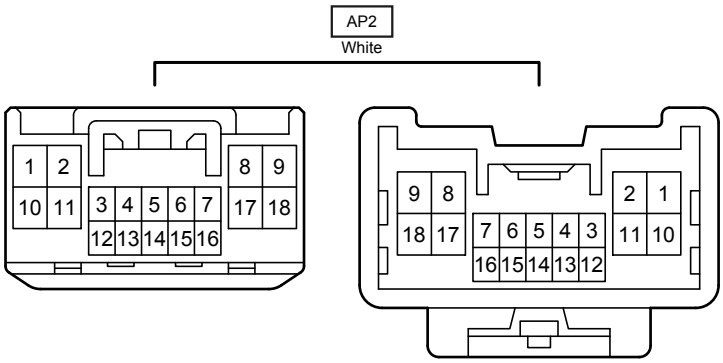
AP2
White
1 2
10 11
3 4 5 6 7
12 13 14 15 16
8 9
17 18
9 8
18 17
7 6 5 4 3
16 15 14 13 12
2 1
11 10

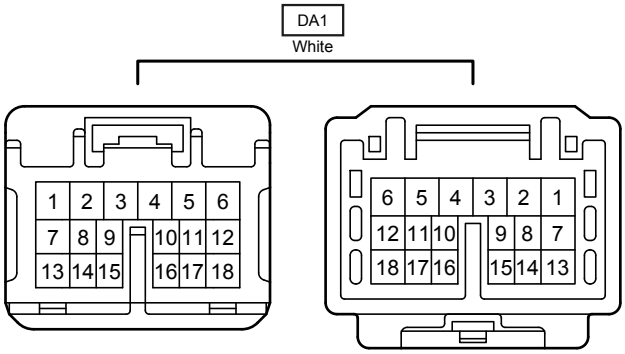
DA1
White
1 2 3 4 5 6
7 8 9 10 11 12
13 14 15 16 17 18
6 5 4 3 2 1
12 11 10 9 8 7
18 17 16 15 14 13

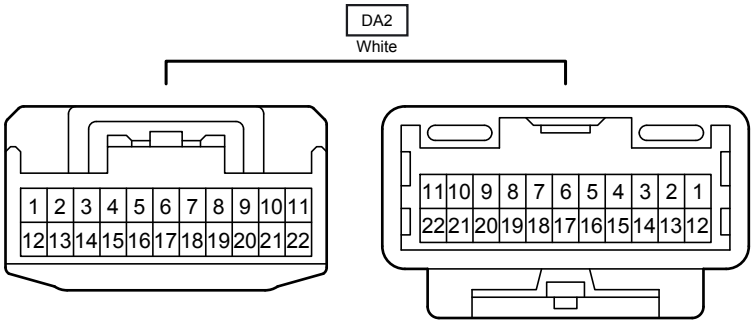
DA2
White
1 2 3 4 5 6 7 8 9 10 11
12 13 14 15 16 17 18 19 20 21 22
11 10 9 8 7 6 5 4 3 2 1
22 21 20 19 18 17 16 15 14 13 12

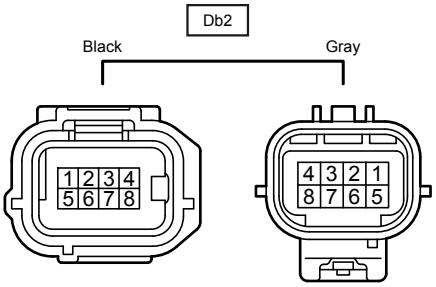
Db2
Black
Gray
1 2 3 4
5 6 7 8
4 3 2 1
8 7 6 5

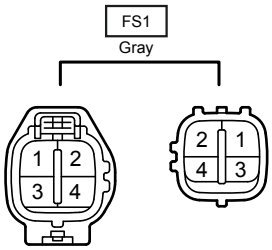
FS1
Gray
1 2
3 4
2 1
4 3