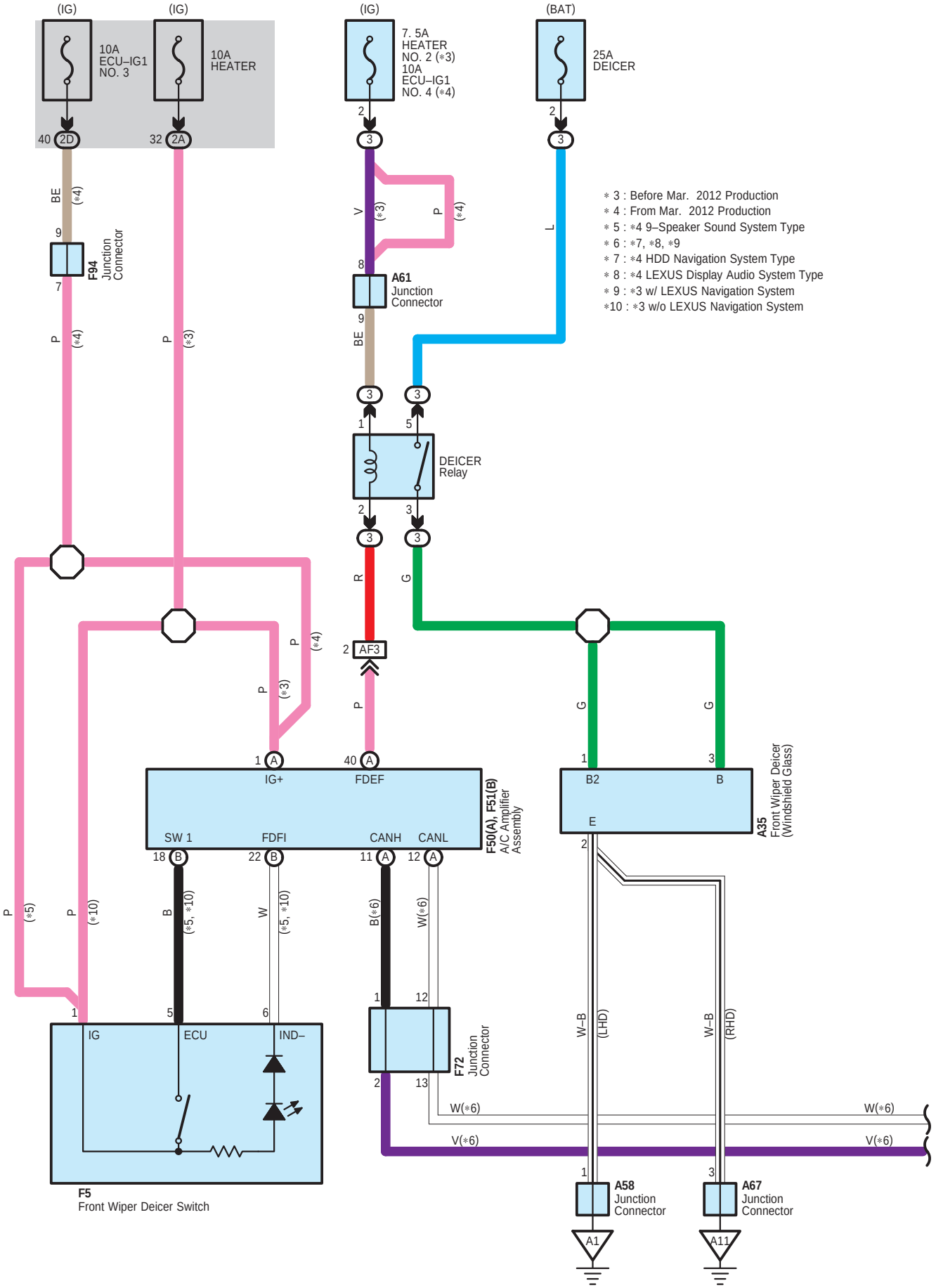
(IG)
10A
ECU–IG1
NO. 3
(IG)
10A
HEATER
(IG)
7. 5A
HEATER
NO. 2 (∗3)
10A
ECU–IG1
NO. 4 (∗4)
(BAT)
25A
DEICER
∗ 3 : Before Mar. 2012 Production
∗ 4 : From Mar. 2012 Production
∗ 5 : ∗4 9–Speaker Sound System Type
∗ 6 : ∗7, ∗8, ∗9
∗ 7 : ∗4 HDD Navigation System Type
∗ 8 : ∗4 LEXUS Display Audio System Type
∗ 9 : ∗3 w/ LEXUS Navigation System
∗10 : ∗3 w/o LEXUS Navigation System
F94
Junction
Connector
A61
Junction
Connector
DEICER
Relay
AF3
IG+
FDEF
SW 1
FDFI
CANH
CANL
F50(A), F51(B)
A/C Amplifier
Assembly
B2
B
E
A35
Front Wiper Deicer
(Windshield Glass)
IG
ECU
IND–
F5
Front Wiper Deicer Switch
F72
Junction
Connector
W–B
(LHD)
W–B
(RHD)
W(∗6)
V(∗6)
A58
Junction
Connector
A67
Junction
Connector
A1
A11

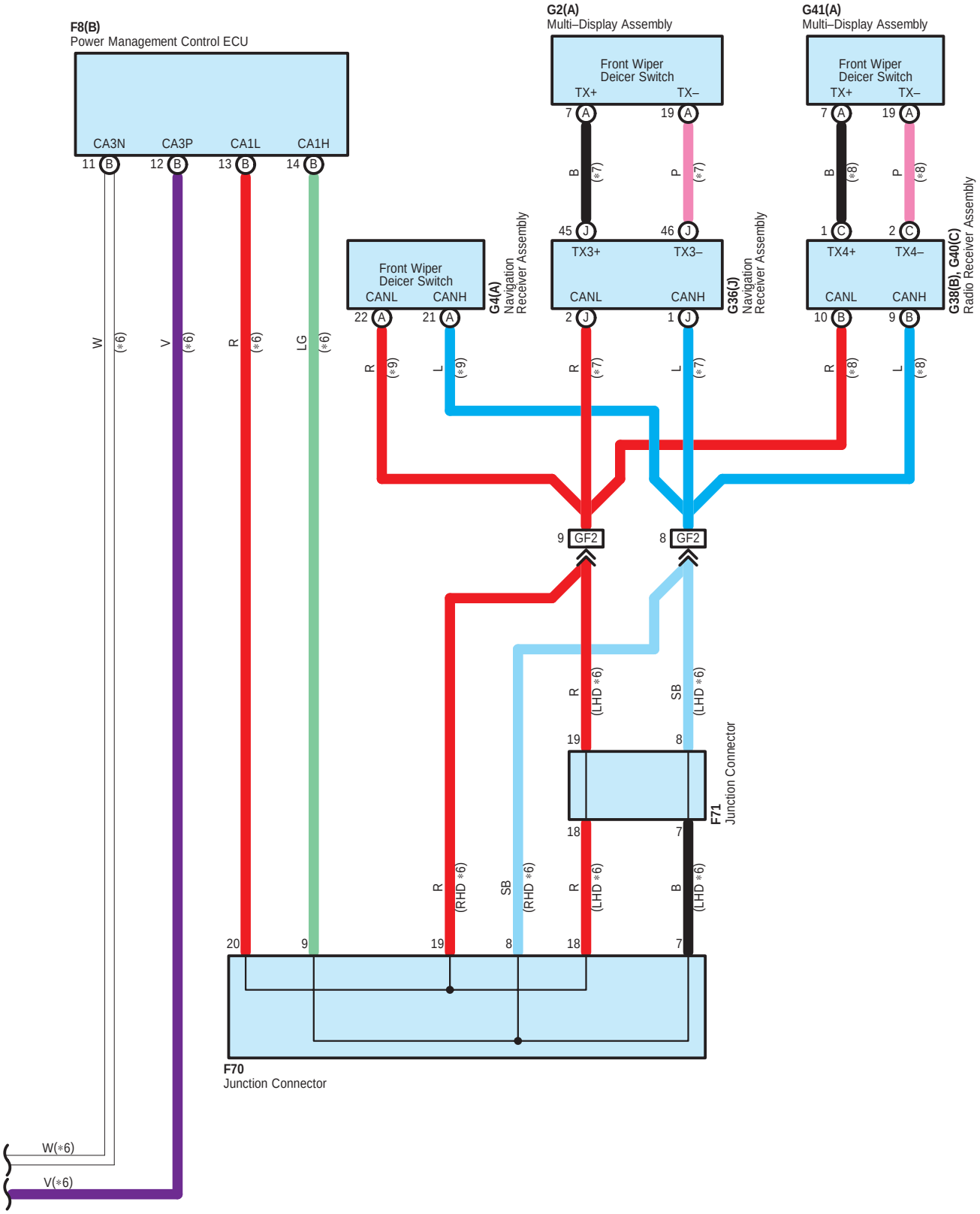
F8(B)
Power Management Control ECU
CA3N
CA3P
CA1L
CA1H
11 B
12 B
13 B
14 B
G2(A)
Multi–Display Assembly
Front Wiper
Deicer Switch
TX+
TX–
7 A
19 A
B (*7)
P (*7)
45 J
46 J
TX3+
TX3–
CANL
CANH
G36(J)
Navigation
Receiver Assembly
G41(A)
Multi–Display Assembly
Front Wiper
Deicer Switch
TX+
TX–
7 A
19 A
B (*8)
P (*8)
1 C
2 C
TX4+
TX4–
CANL
CANH
G38(B), G40(C)
Radio Receiver Assembly
Front Wiper
Deicer Switch
CANL
CANH
22 A
21 A
G4(A)
Navigation
Receiver Assembly
2 J
1 J
10 B
9 B
W (*6)
V (*6)
R (*6)
LG (*6)
R (*9)
L (*9)
R (*7)
L (*7)
R (*8)
L (*8)
9 GF2
8 GF2
R (LHD *6)
SB (LHD *6)
19
8
18
7
F71
Junction Connector
R (RHD *6)
SB (RHD *6)
R (LHD *6)
B (LHD *6)
20
9
19
8
18
7
F70
Junction Connector
W(*6)
V(*6)

A 35
Gray

A 58
Gray

A 61
Black

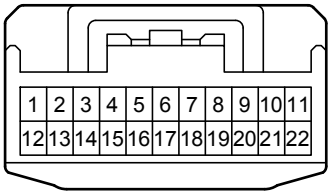

A 67
Gray

F 5
Blue

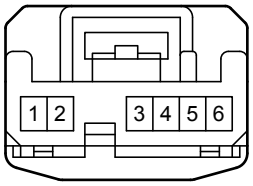

F 8
Black

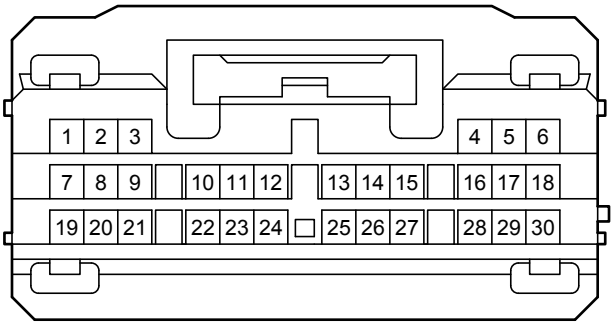

F 50
White

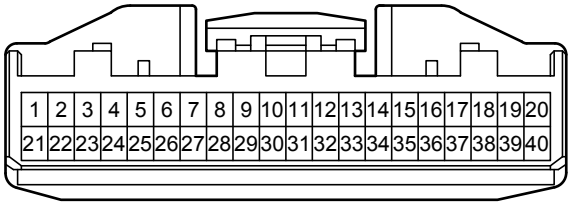

F 51
White

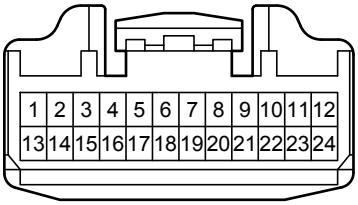

F 70
Blue

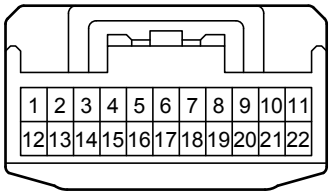

F 71
Blue

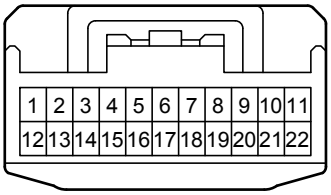

F 72
White

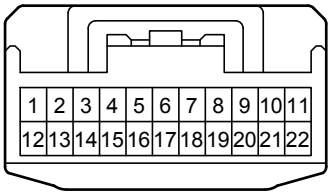

F 94
White

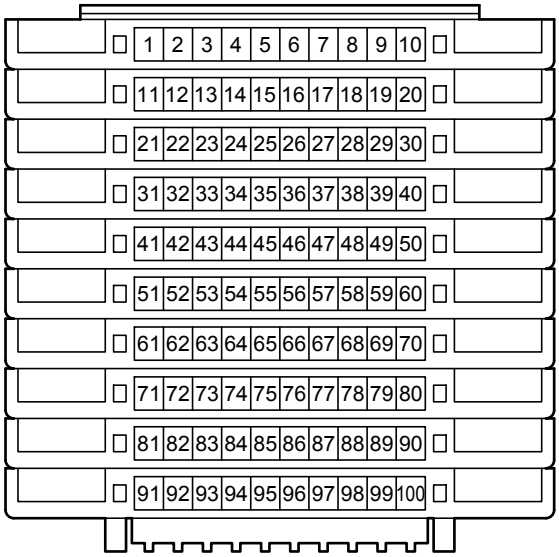

G 2
White

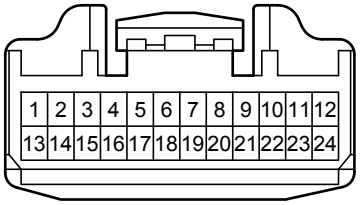

G 4
White

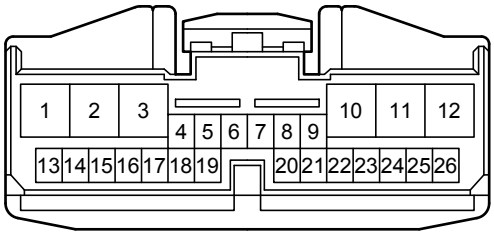

G 36
White

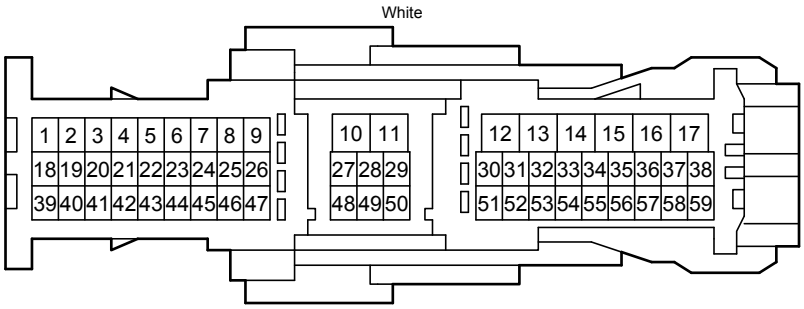

G 38
White

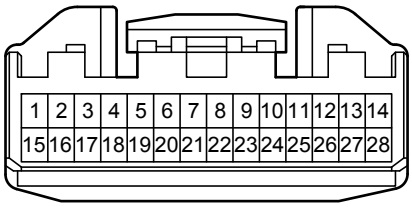

G 40
White

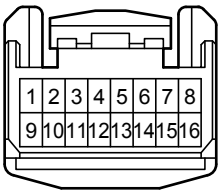

G 41
White

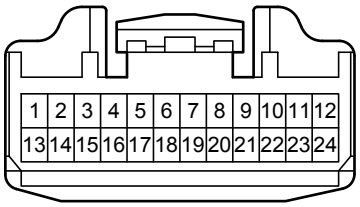

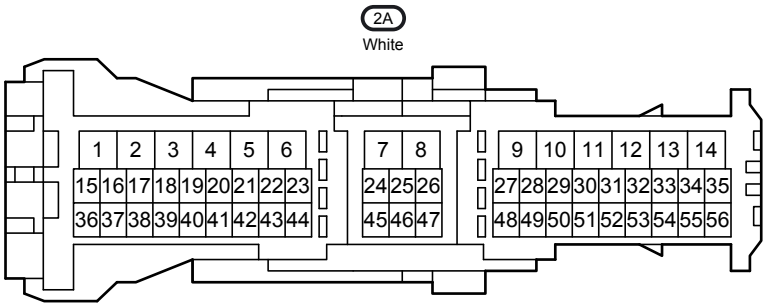
2A
White
1 2 3 4 5 6 7 8 9 10 11 12 13 14
15 16 17 18 19 20 21 22 23 24 25 26 27 28 29 30 31 32 33 34 35
36 37 38 39 40 41 42 43 44 45 46 47 48 49 50 51 52 53 54 55 56

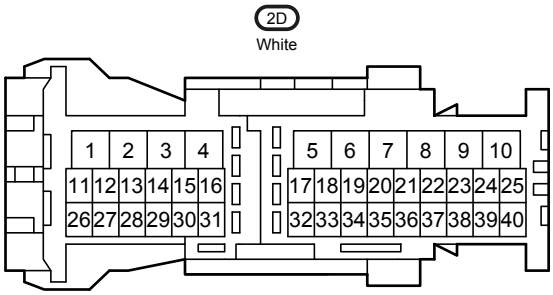
2D
White
1 2 3 4 5 6 7 8 9 10
11 12 13 14 15 16 17 18 19 20 21 22 23 24 25
26 27 28 29 30 31 32 33 34 35 36 37 38 39 40

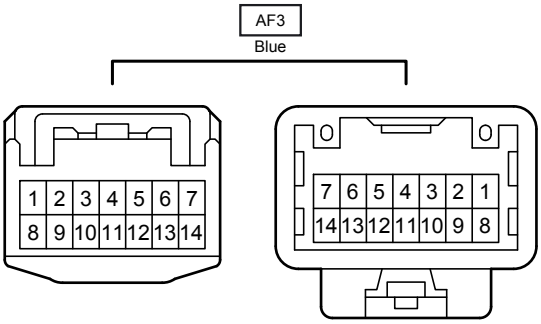
AF3
Blue
1 2 3 4 5 6 7
8 9 10 11 12 13 14
7 6 5 4 3 2 1
14 13 12 11 10 9 8

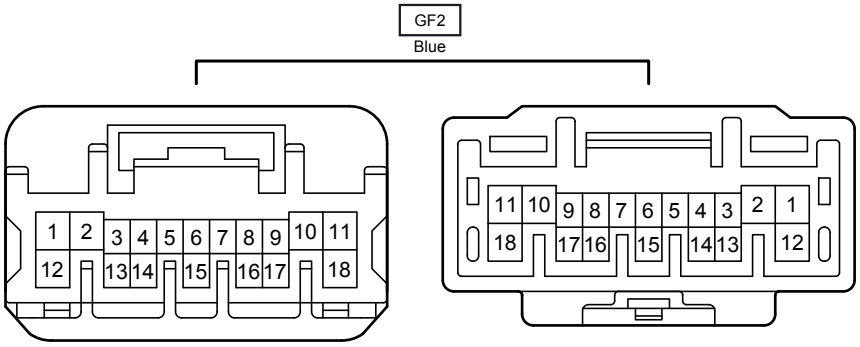
GF2
Blue
1 2 3 4 5 6 7 8 9 10 11
12 13 14 15 16 17 18
11 10 9 8 7 6 5 4 3 2 1
18 17 16 15 14 13 12