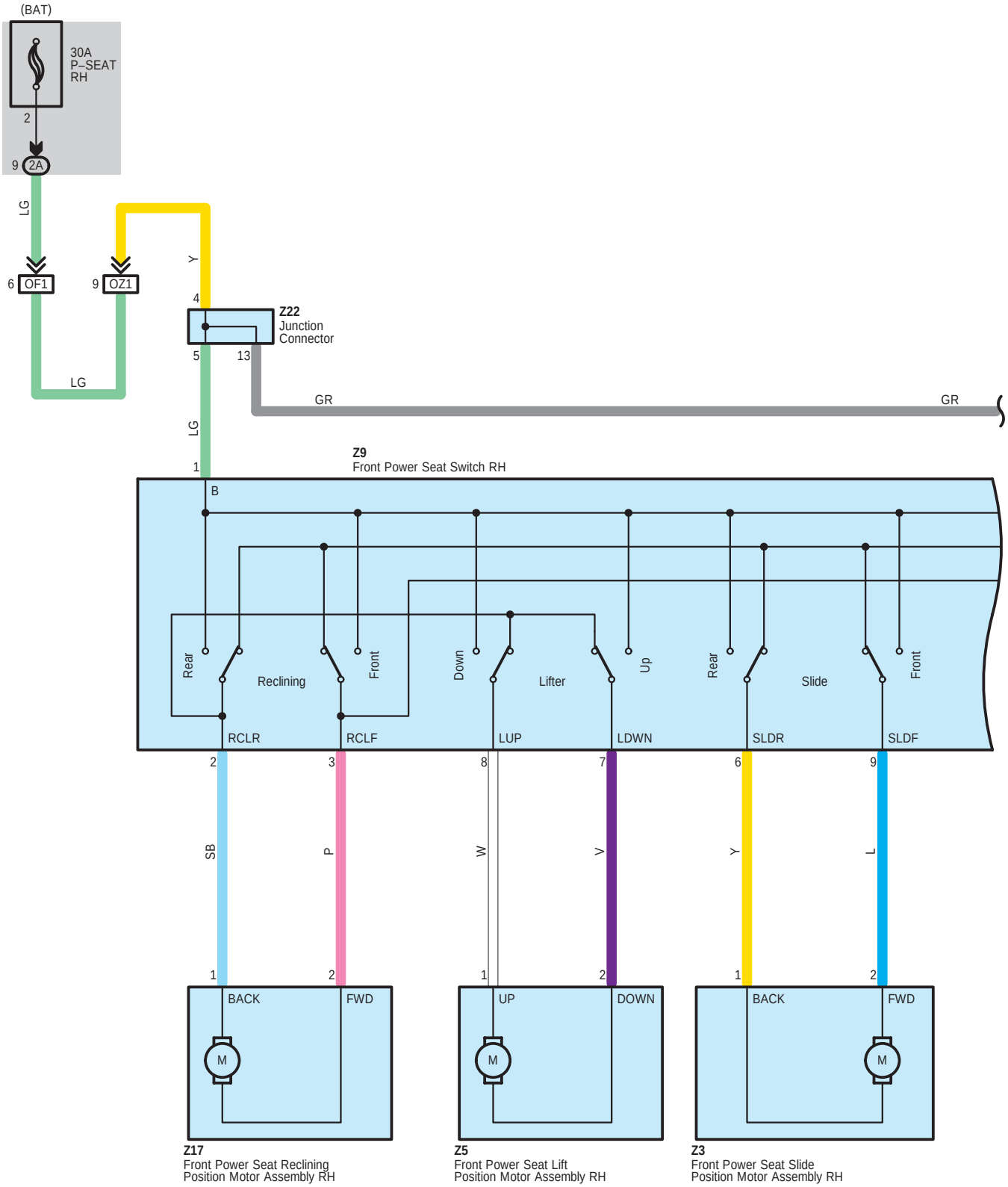
(BAT)
30A
P–SEAT
RH
2
9 2A
LG
6 OF1
9 OZ1
Y
4
Z22
Junction
Connector
5
13
LG
GR
GR
LG
1
Z9
Front Power Seat Switch RH
B
Rear
Reclining
Front
Down
Lifter
Up
Rear
Slide
Front
RCLR
RCLF
LUP
LDWN
SLDR
SLDF
2
3
8
7
6
9
SB
P
W
V
Y
L
1
2
1
2
1
2
BACK
FWD
UP
DOWN
BACK
FWD
M
M
M
Z17
Front Power Seat Reclining
Position Motor Assembly RH
Z5
Front Power Seat Lift
Position Motor Assembly RH
Z3
Front Power Seat Slide
Position Motor Assembly RH

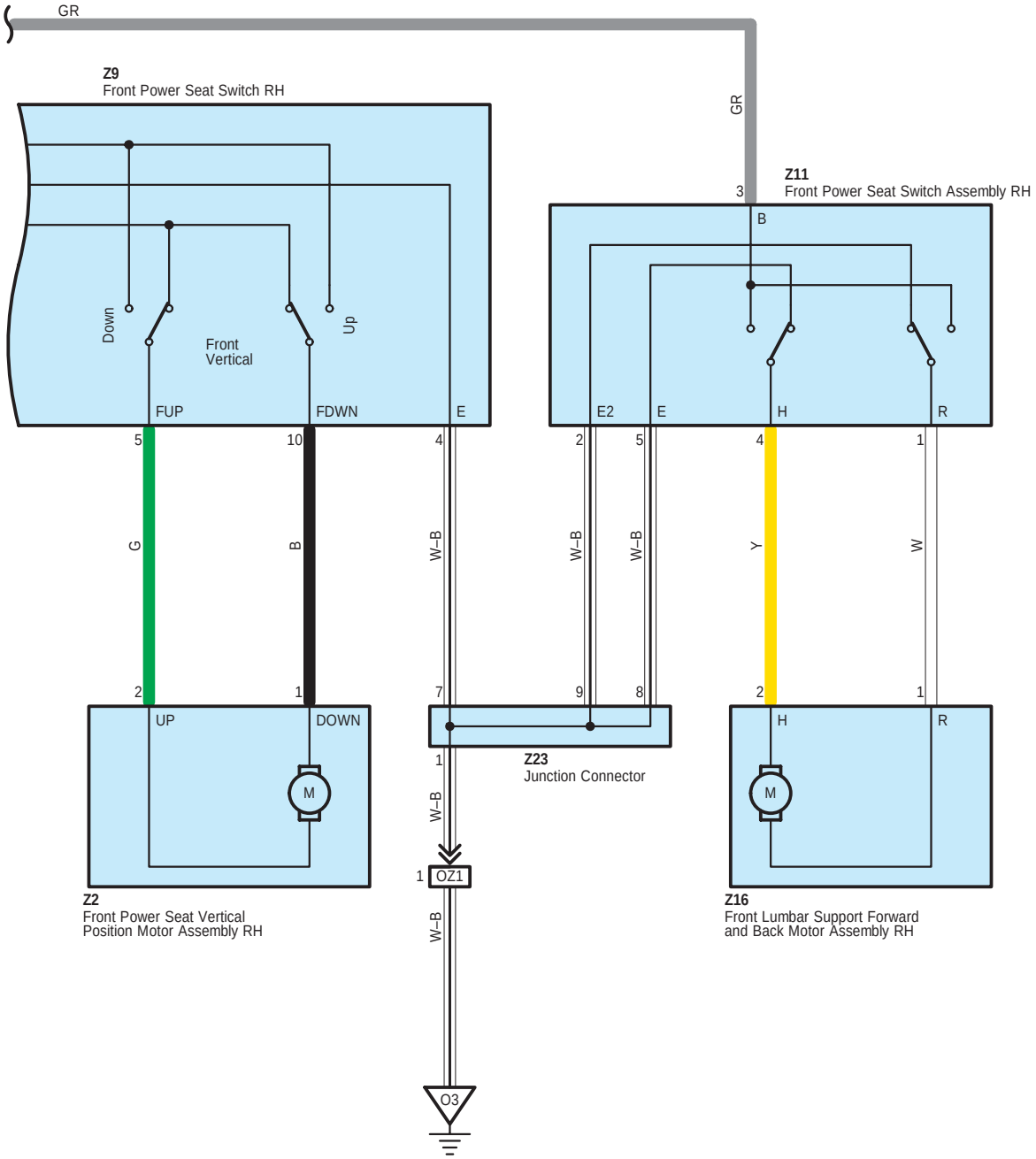
GR
Z9
Front Power Seat Switch RH
Down
Front
Vertical
Up
FUP
FDWN
E
5
10
4
G
B
W–B
2
1
7
UP
DOWN
M
Z2
Front Power Seat Vertical
Position Motor Assembly RH
GR
3
Z11
Front Power Seat Switch Assembly RH
B
E2
E
H
R
2
5
4
1
W–B
W–B
Y
W
9
8
2
1
H
R
M
Z16
Front Lumbar Support Forward
and Back Motor Assembly RH
1
Z23
Junction Connector
W–B
1
OZ1
W–B
O3

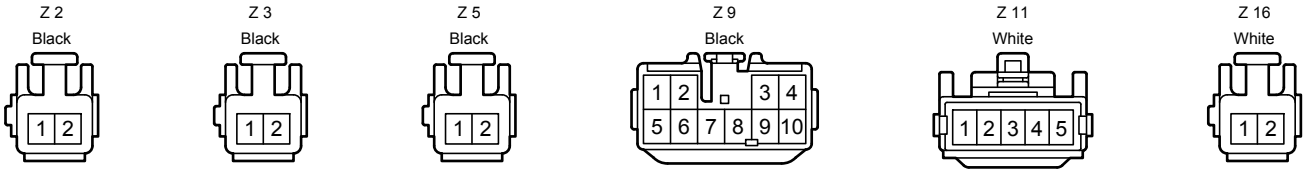
Z 2
Black
1 2
Z 3
Black
1 2
Z 5
Black
1 2
Z 9
Black
1 2 3 4
5 6 7 8 9 10
Z 11
White
1 2 3 4 5
Z 16
White
1 2

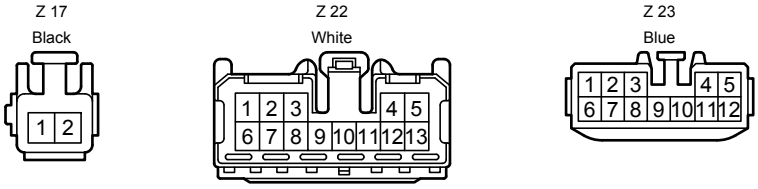
Z 17
Black
1 2
Z 22
White
1 2 3 4 5
6 7 8 9 10 11 12 13
Z 23
Blue
1 2 3 4 5
6 7 8 9 10 11 12

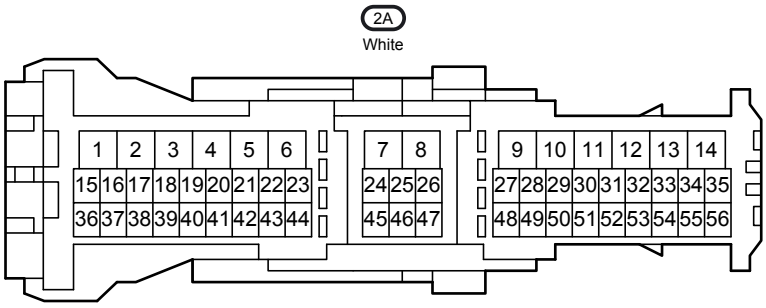
2A
White
1 2 3 4 5 6
15 16 17 18 19 20 21 22 23
36 37 38 39 40 41 42 43 44
7 8
24 25 26
45 46 47
9 10 11 12 13 14
27 28 29 30 31 32 33 34 35
48 49 50 51 52 53 54 55 56

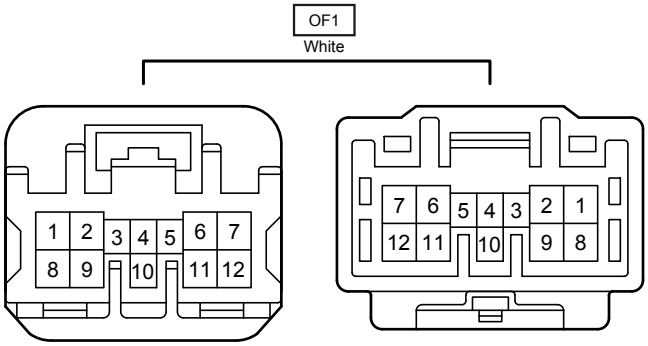
OF1
White
1 2 3 4 5 6 7
8 9 10 11 12
7 6 5 4 3 2 1
12 11 10 9 8

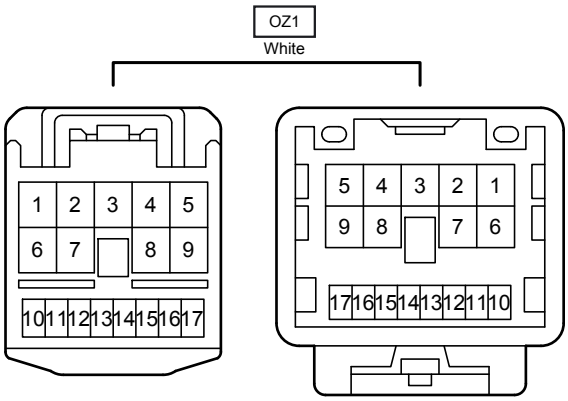
OZ1
White
1 2 3 4 5
6 7 8 9
10 11 12 13 14 15 16 17
5 4 3 2 1
9 8 7 6
17 16 15 14 13 12 11 10