(Cont. next page)

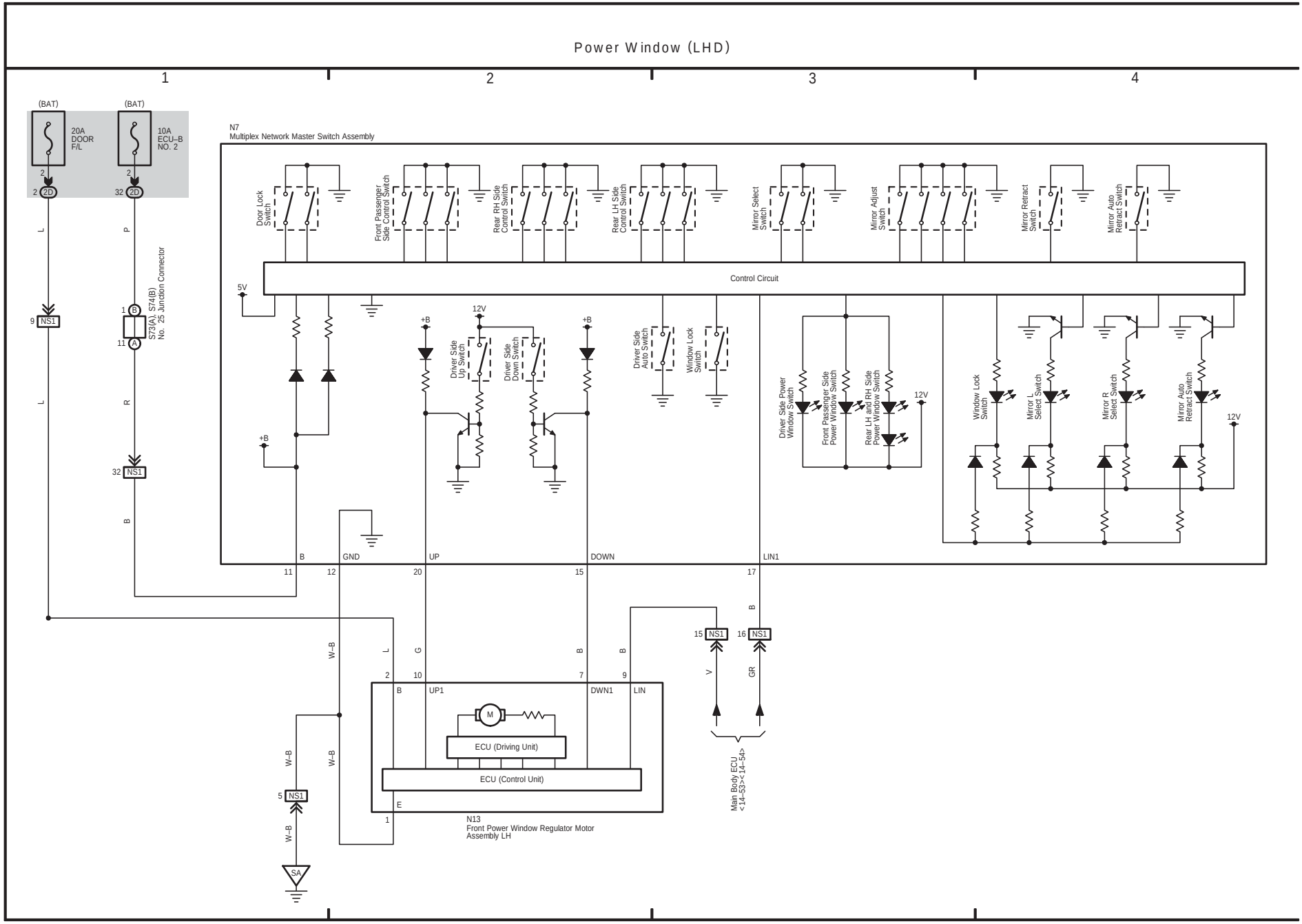

(Cont. next page)

Power Window (LHD)

* 1 : w/ Rear No. 2 Seat
* 2 : w/o Rear No. 2 Seat

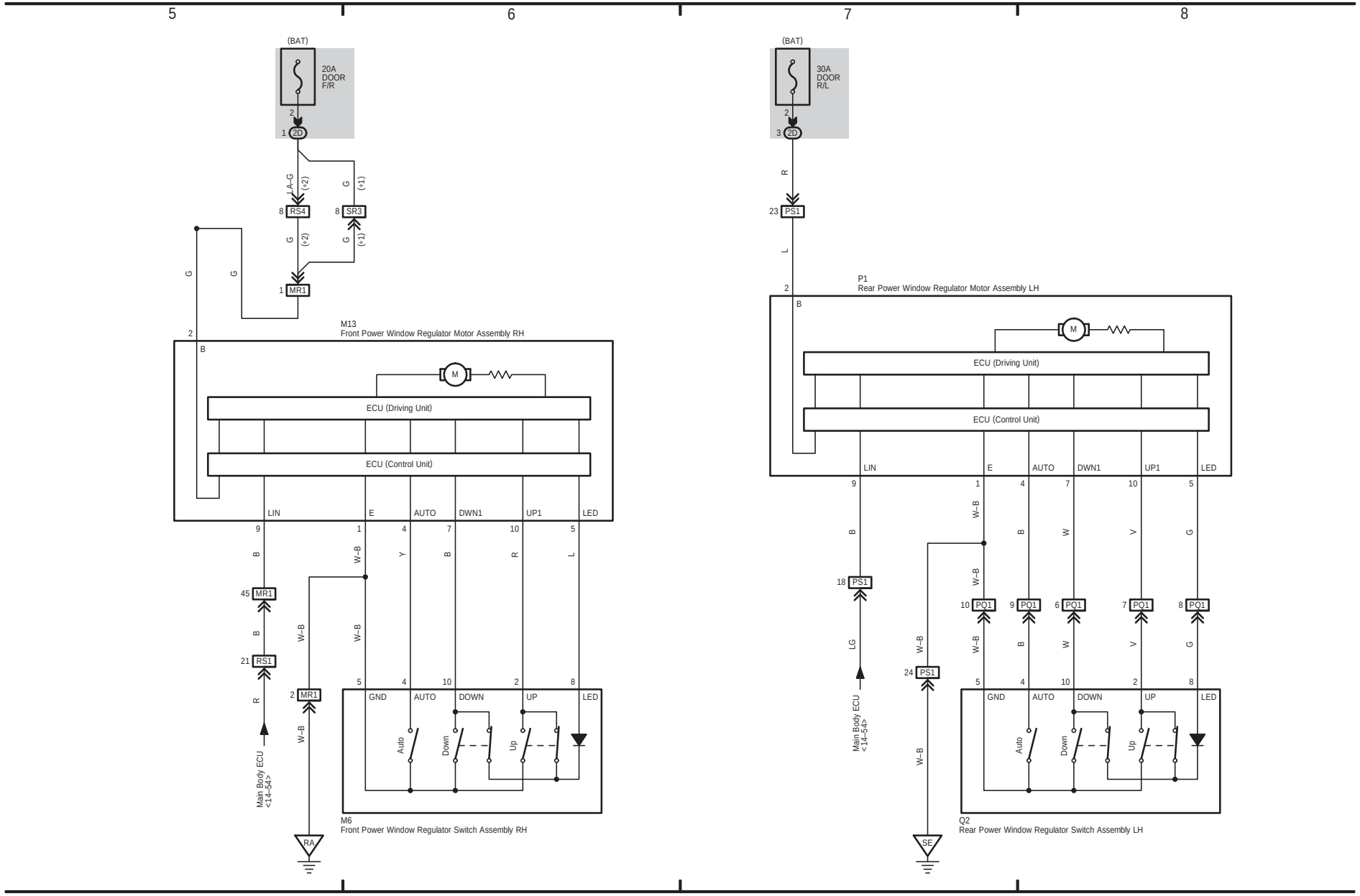

Power Window (LHD)
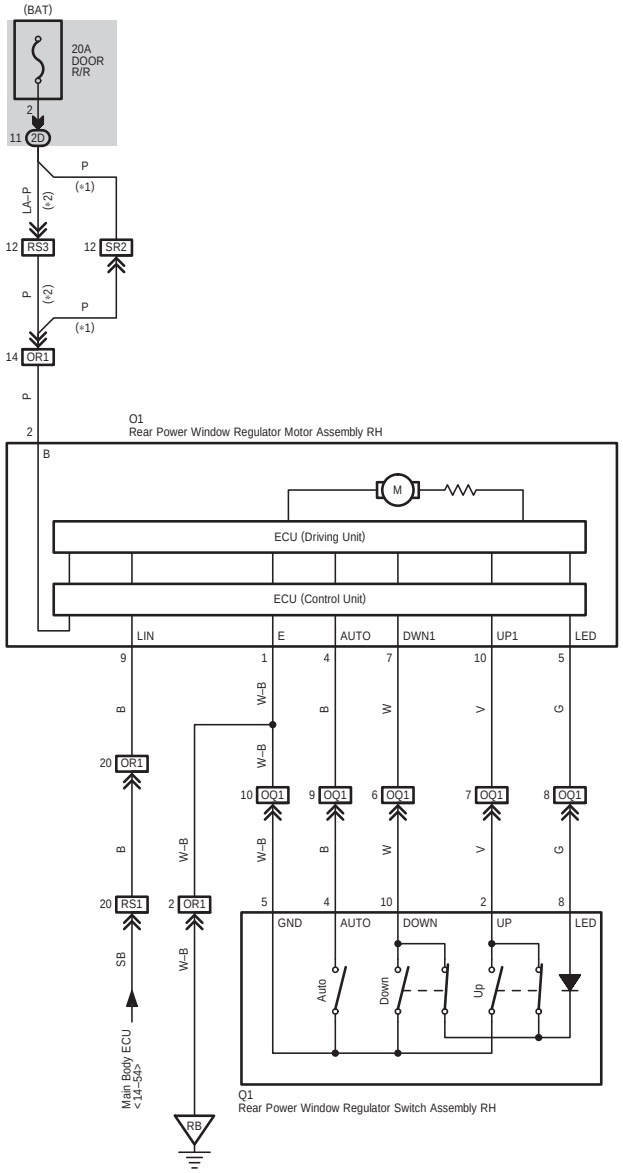
* 1 : w/ Rear No. 2 Seat
* 2 : w/o Rear No. 2 Seat