(Cont. next page)

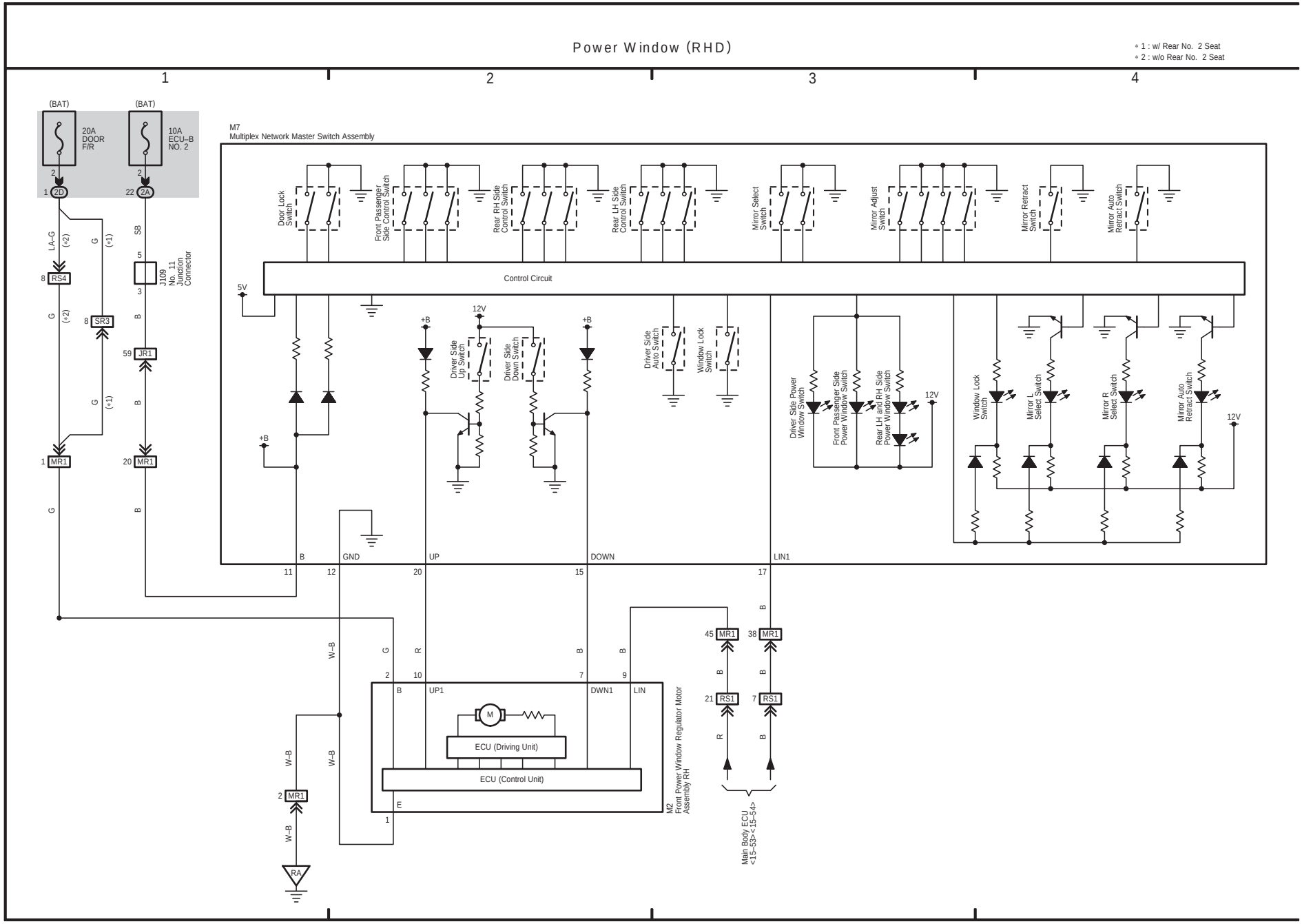

(Cont. next page)

Power Window (RHD)

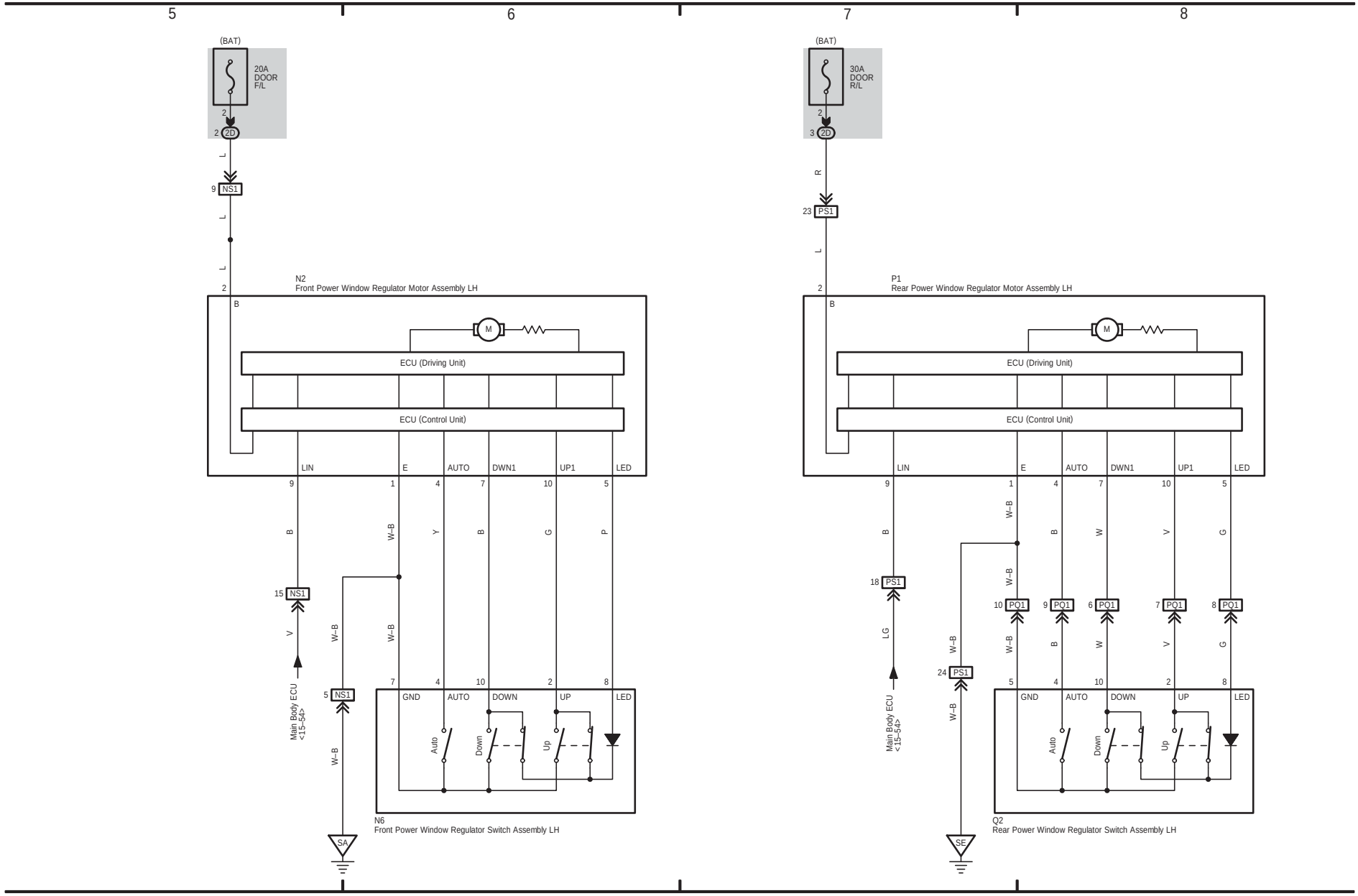

Power Window (RHD)
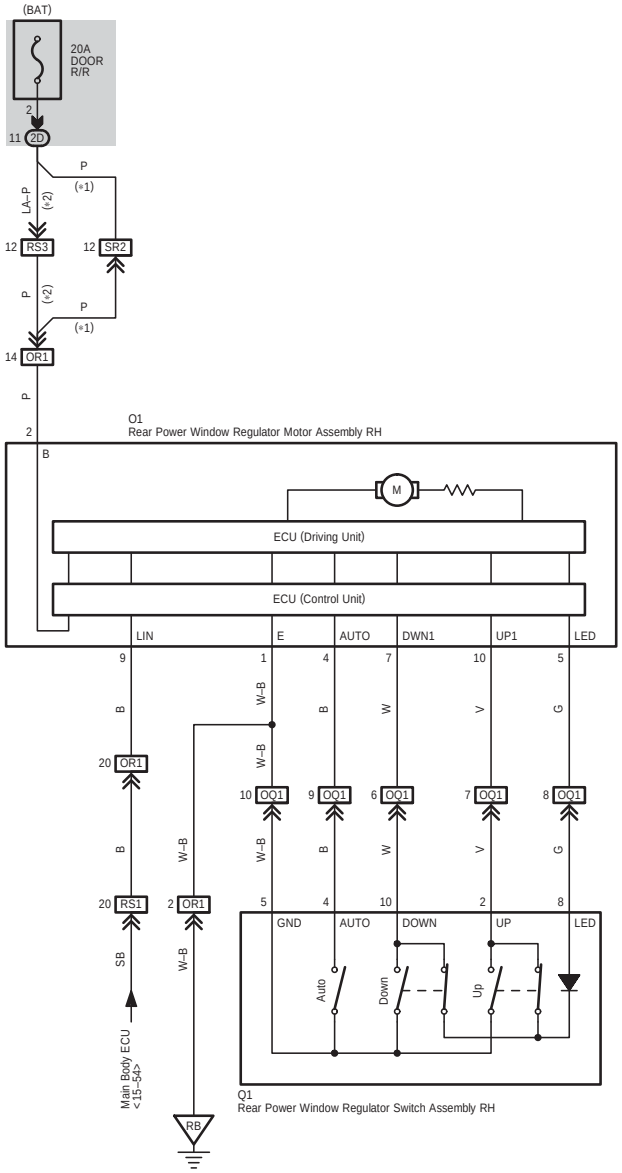
* 1 : w/ Rear No. 2 Seat
* 2 : w/o Rear No. 2 Seat