[Engine Room R/B No. 1 and Engine Room J/B No. 1 Inner Circuit]

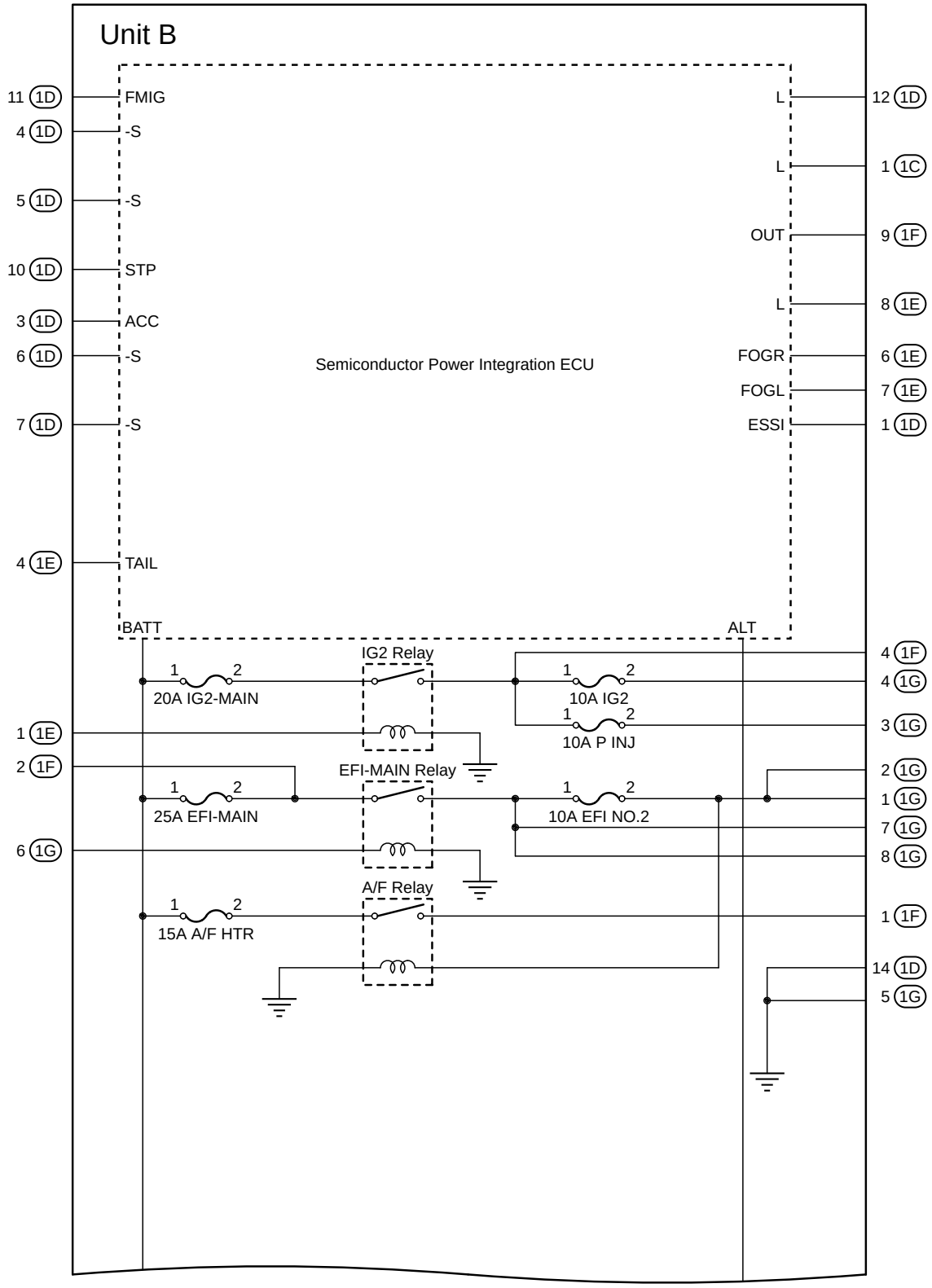

(Cont. Next Page)

[Engine Room R/B No. 1 and Engine Room J/B No. 1 Inner Circuit]

* 2:From Dec. 2017 Production

(Cont'd)

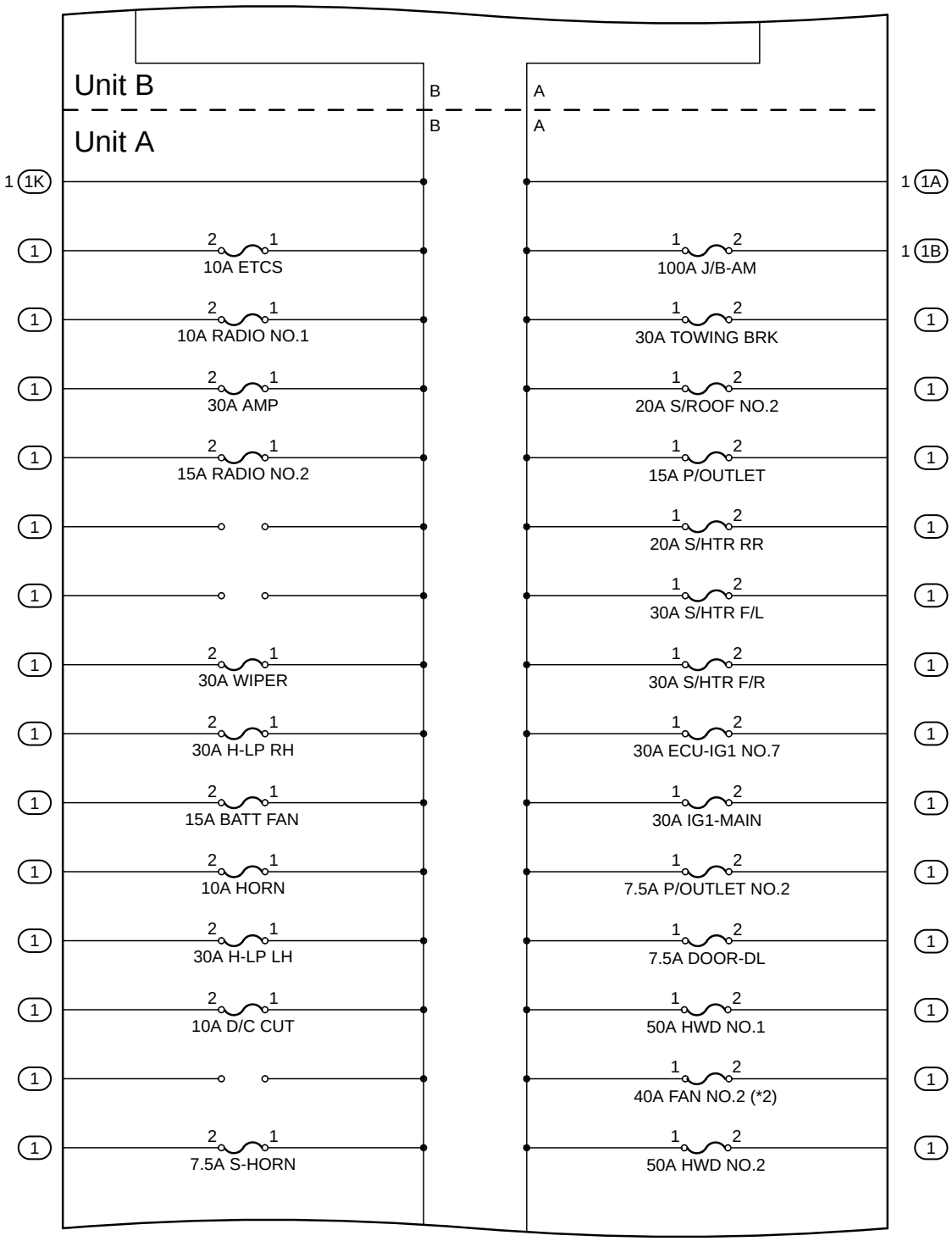

(Cont. Next Page)

[Engine Room R/B No. 1 and Engine Room J/B No. 1 Inner Circuit]

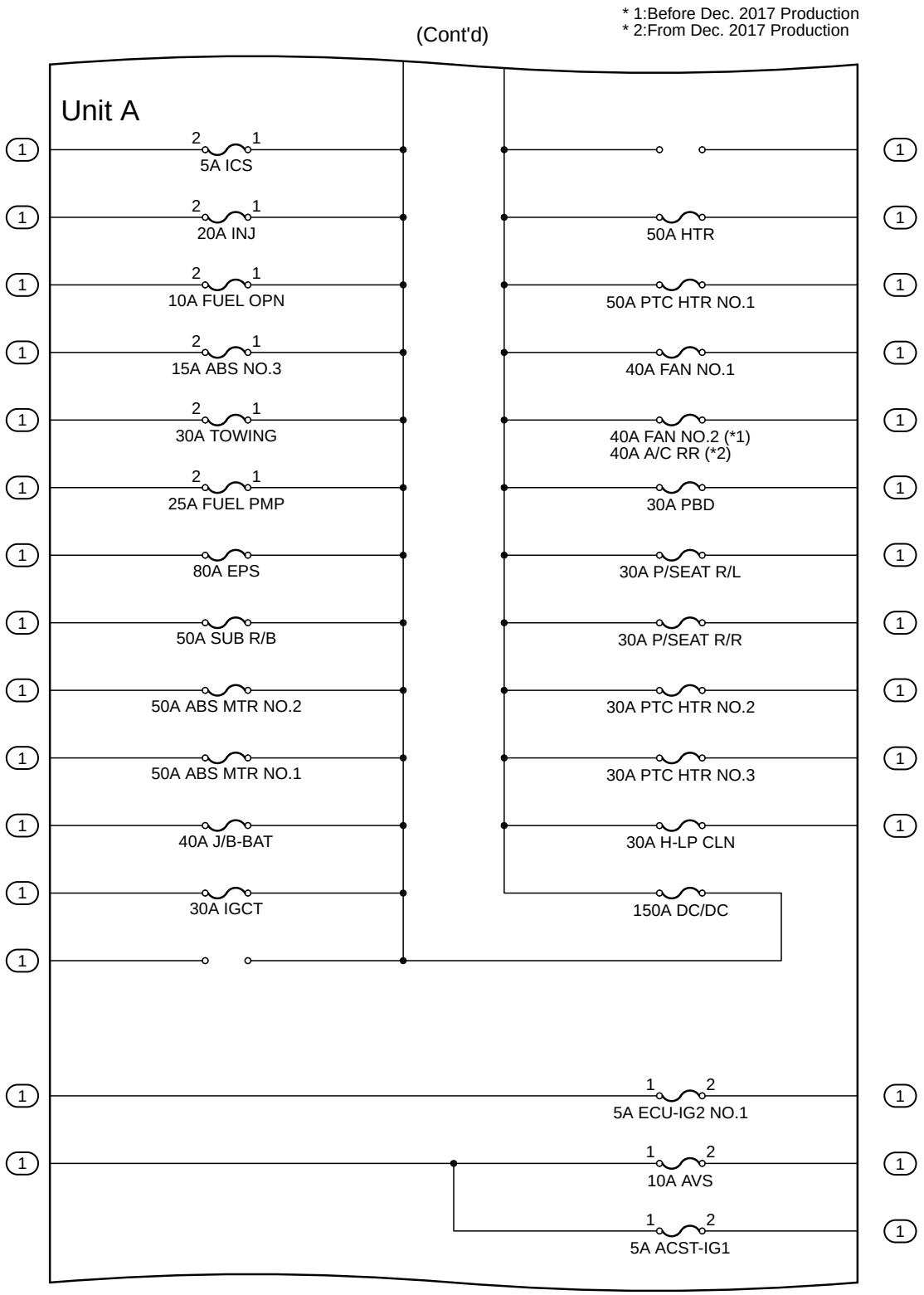

(Cont. Next Page)

[Engine Room R/B No. 1 and Engine Room J/B No. 1 Inner Circuit]

(Cont'd)

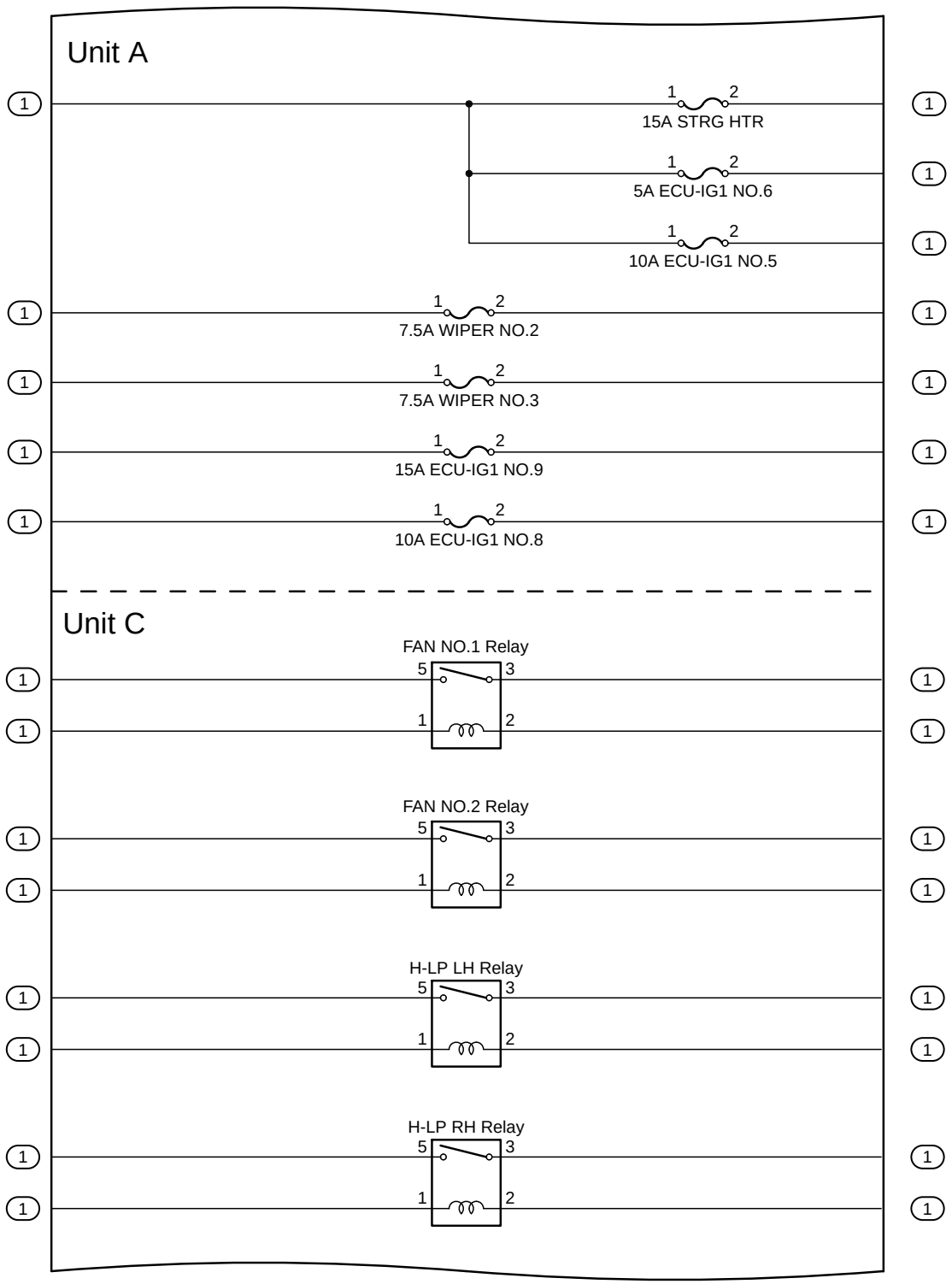

(Cont. Next Page)

[Engine Room R/B No. 1 and Engine Room J/B No. 1 Inner Circuit]

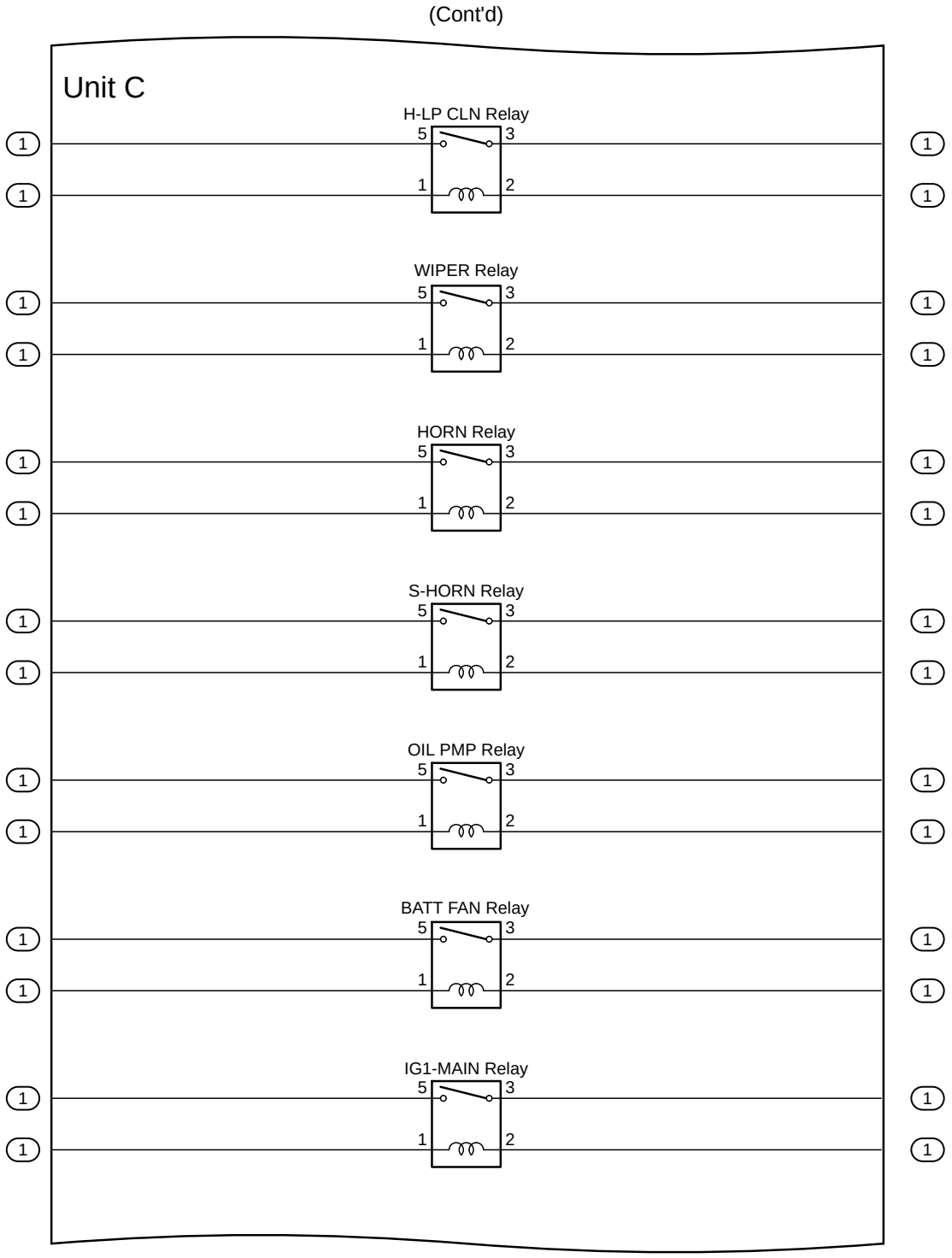

(Cont. Next Page)

[Engine Room R/B No. 1 and Engine Room J/B No. 1 Inner Circuit]
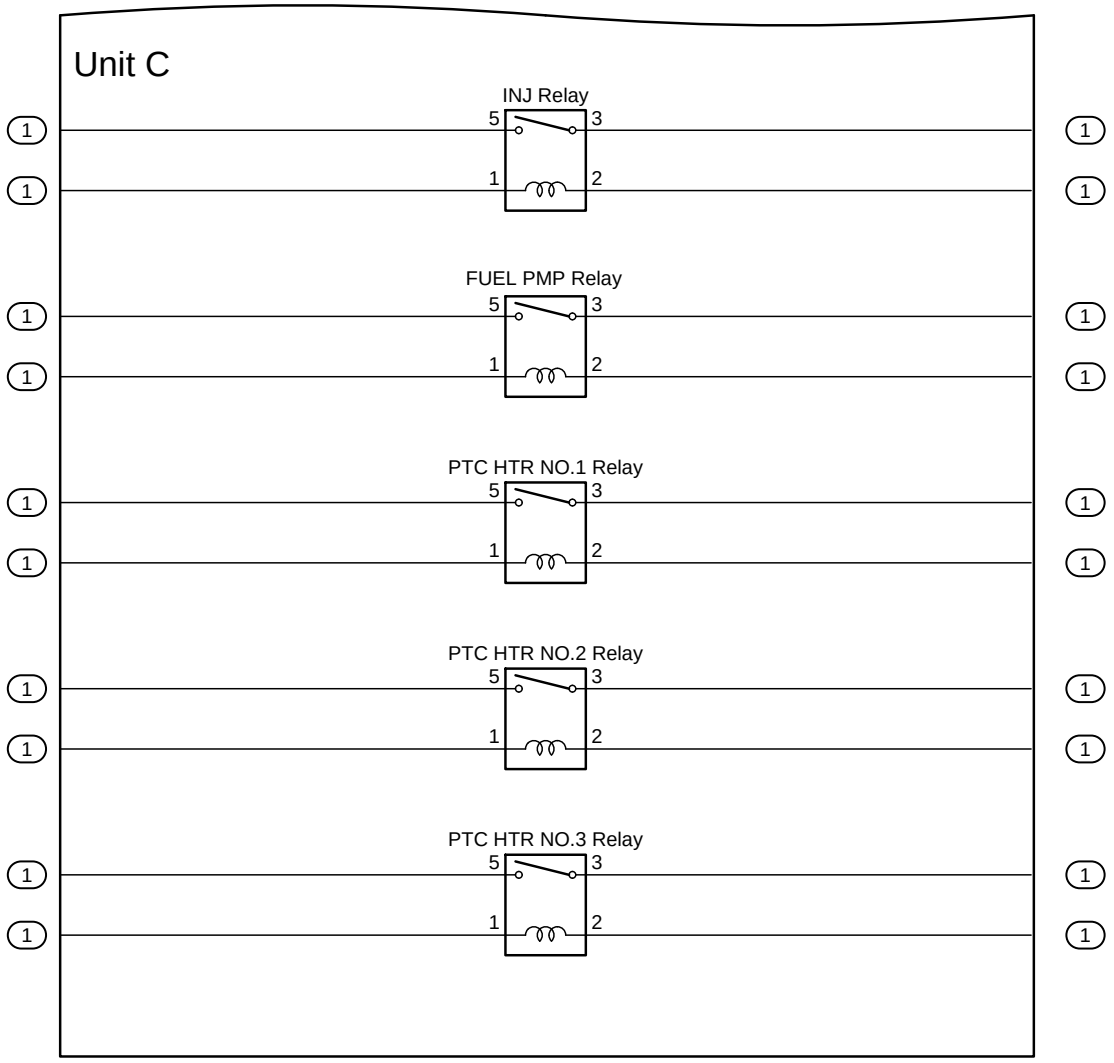
(Cont'd)