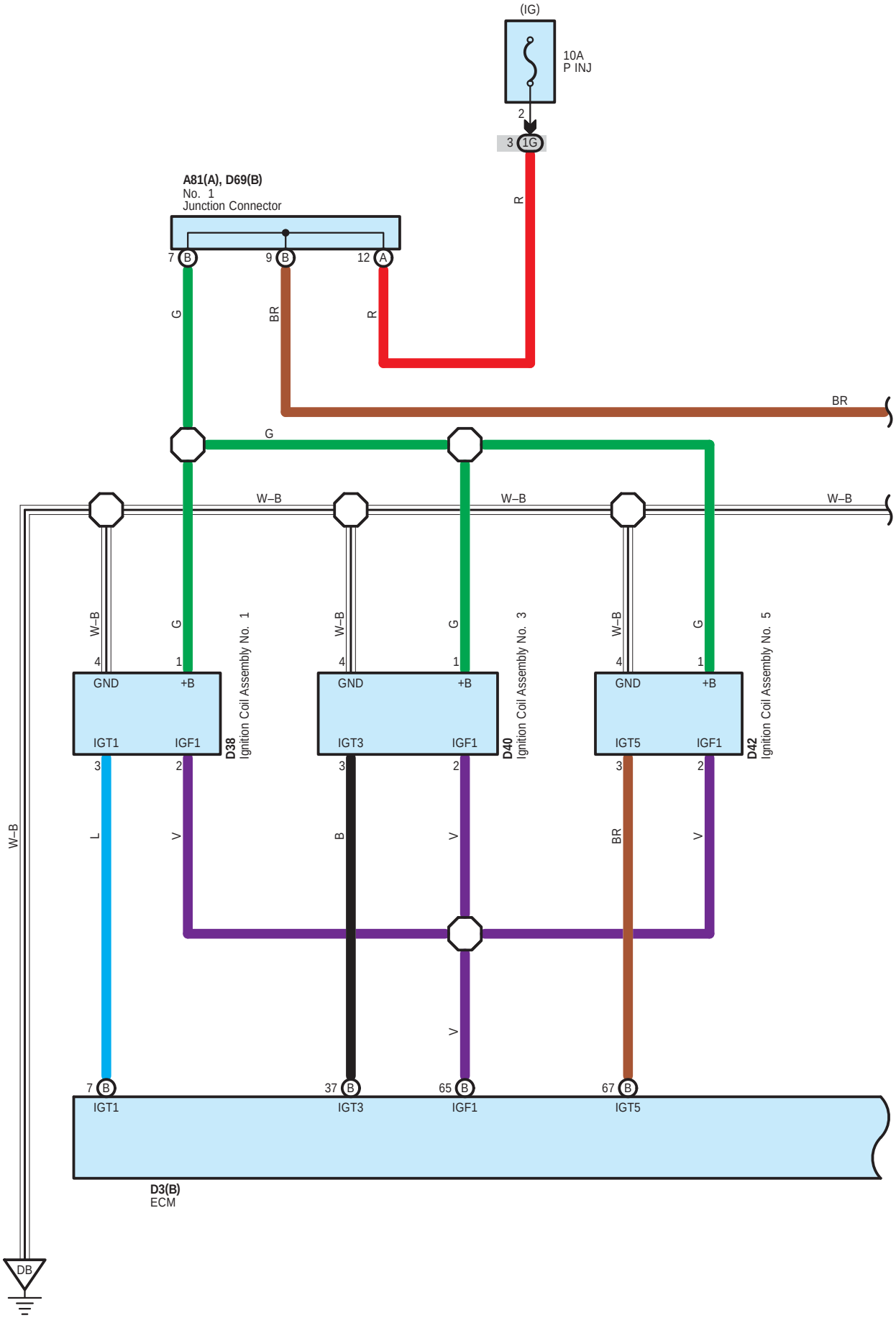
(IG)
10A
P INJ
2
3 1G
R
A81(A), D69(B)
No. 1
Junction Connector
7 B
9 B
12 A
G
BR
R
BR
G
W–B
W–B
W–B
W–B
G
W–B
G
W–B
G
4
1
GND
+B
IGT1
IGF1
3
2
D38
Ignition Coil Assembly No. 1
GND
+B
IGT3
IGF1
D40
Ignition Coil Assembly No. 3
GND
+B
IGT5
IGF1
D42
Ignition Coil Assembly No. 5
L
V
B
V
BR
V
V
7 B
IGT1
37 B
IGT3
65 B
IGF1
67 B
IGT5
D3(B)
ECM
W–B
DB

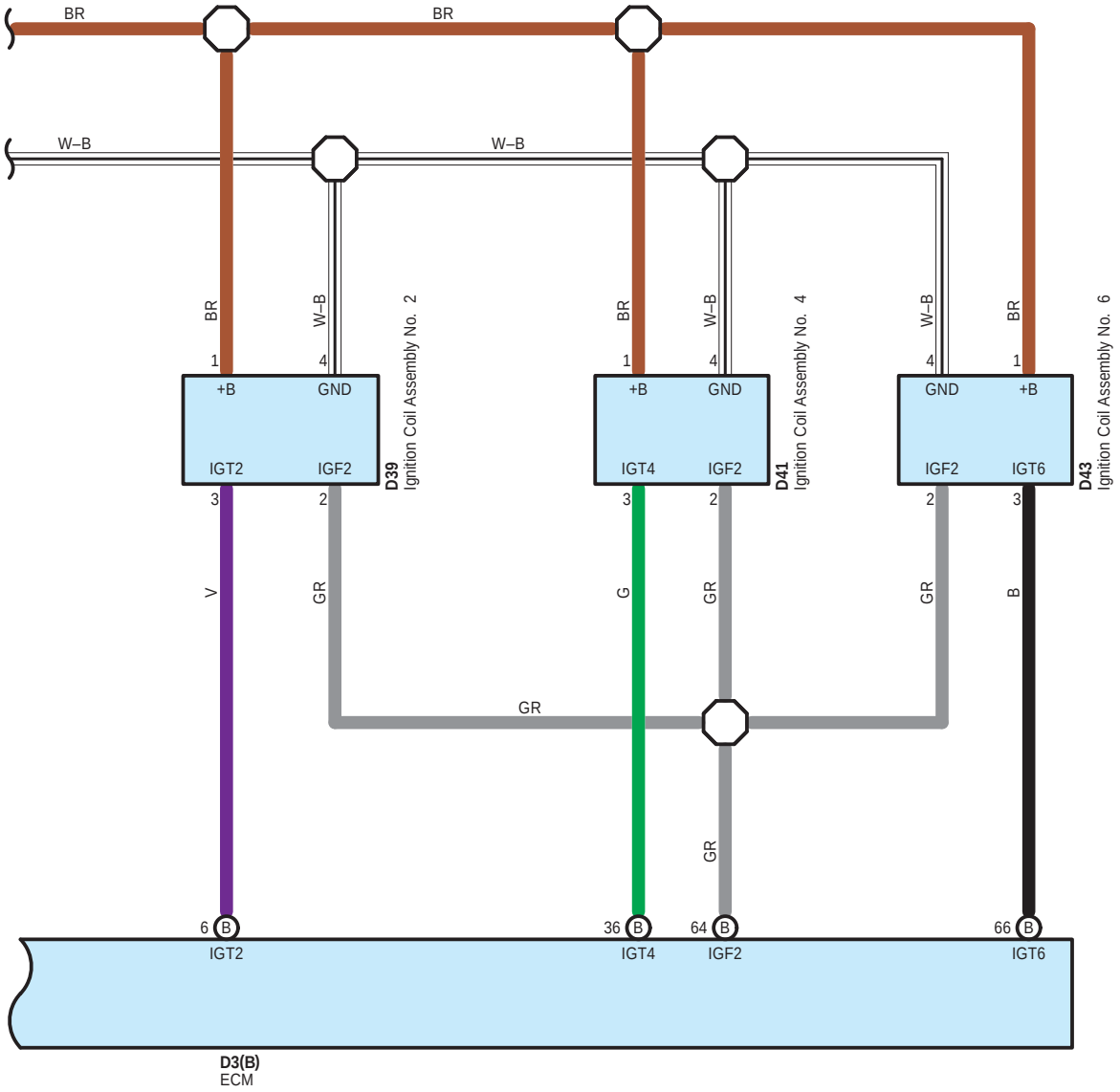
BR
BR
W–B
W–B
BR
W–B
1
4
+B
GND
IGT2
IGF2
3
2
D39
Ignition Coil Assembly No. 2
BR
W–B
1
4
+B
GND
IGT4
IGF2
3
2
D41
Ignition Coil Assembly No. 4
W–B
BR
4
1
GND
+B
IGF2
IGT6
2
3
D43
Ignition Coil Assembly No. 6
V
GR
G
GR
GR
B
GR
GR
6 B
IGT2
36 B
IGT4
64 B
IGF2
66 B
IGT6
D3(B)
ECM

A81
Black

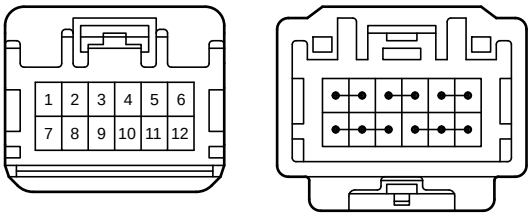

90980-12737

D3
Black

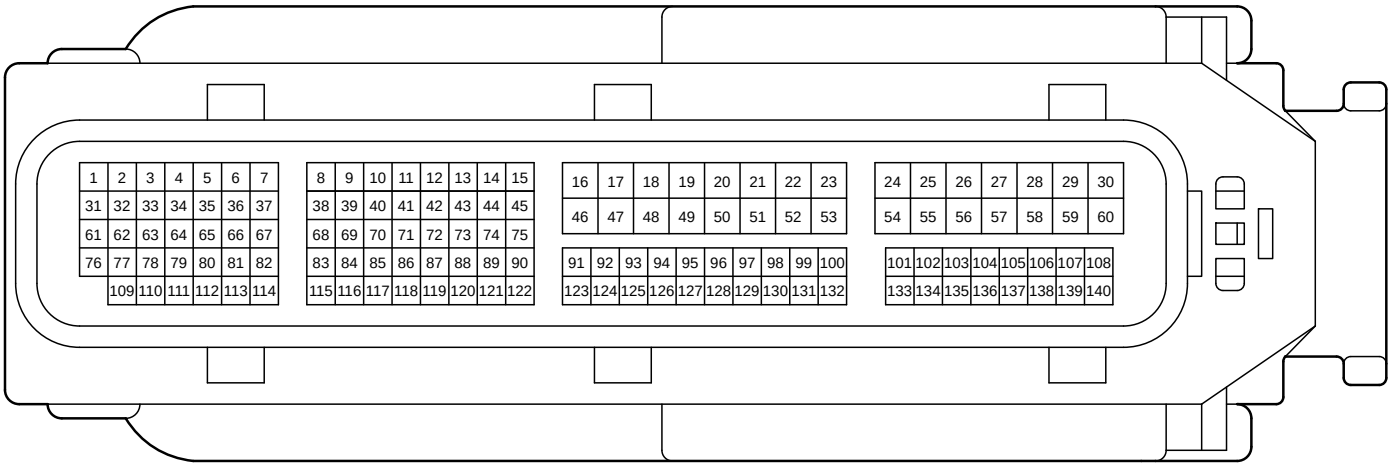

90980-12966

D38
Black

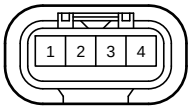

90980-12A29

D39
Black

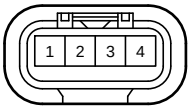

90980-12A29

D40
Black

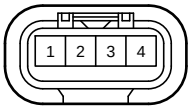

90980-12A29

D41
Black

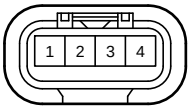

90980-12A29

D42
Black

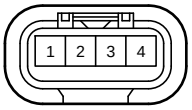

90980-12A29

D43
Black

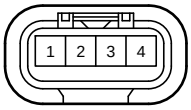

90980-12A29

D69
Black

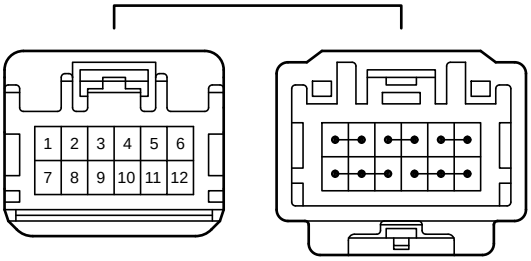

90980-12737

1G
White

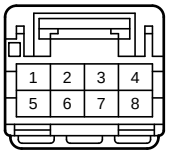

90980-12A54