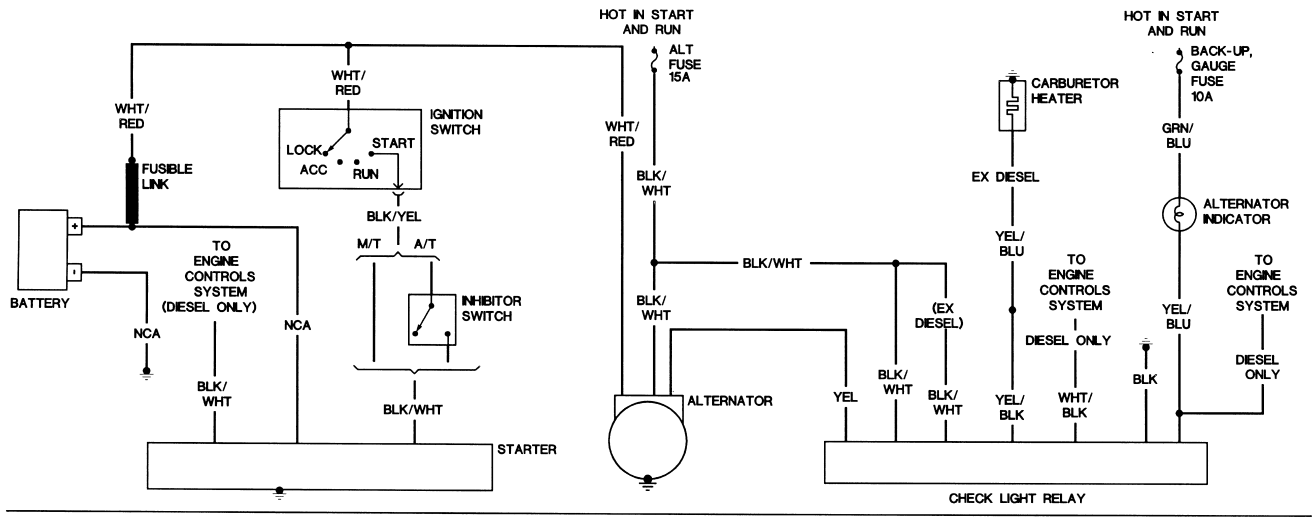
HOT IN START AND RUN
ALT FUSE 15A
HOT IN START AND RUN
BACK-UP, GAUGE FUSE 10A
WHT/ RED
WHT/ RED
IGNITION SWITCH
LOCK
ACC
RUN
START
FUSIBLE LINK
BLK/YEL
M/T
A/T
INHIBITOR SWITCH
BATTERY
TO ENGINE CONTROLS SYSTEM (DIESEL ONLY)
NCA
NCA
BLK/ WHT
BLK/WHT
STARTER
WHT/ RED
BLK/ WHT
BLK/ WHT
ALTERNATOR
BLK/WHT
YEL
BLK/ WHT
(EX DIESEL)
BLK/ WHT
CARBURETOR HEATER
EX DIESEL
YEL/ BLU
YEL/ BLK
TO ENGINE CONTROLS SYSTEM
DIESEL ONLY
WHT/ BLK
GRN/ BLU
ALTERNATOR INDICATOR
YEL/ BLU
BLK
TO ENGINE CONTROLS SYSTEM
DIESEL ONLY
CHECK LIGHT RELAY

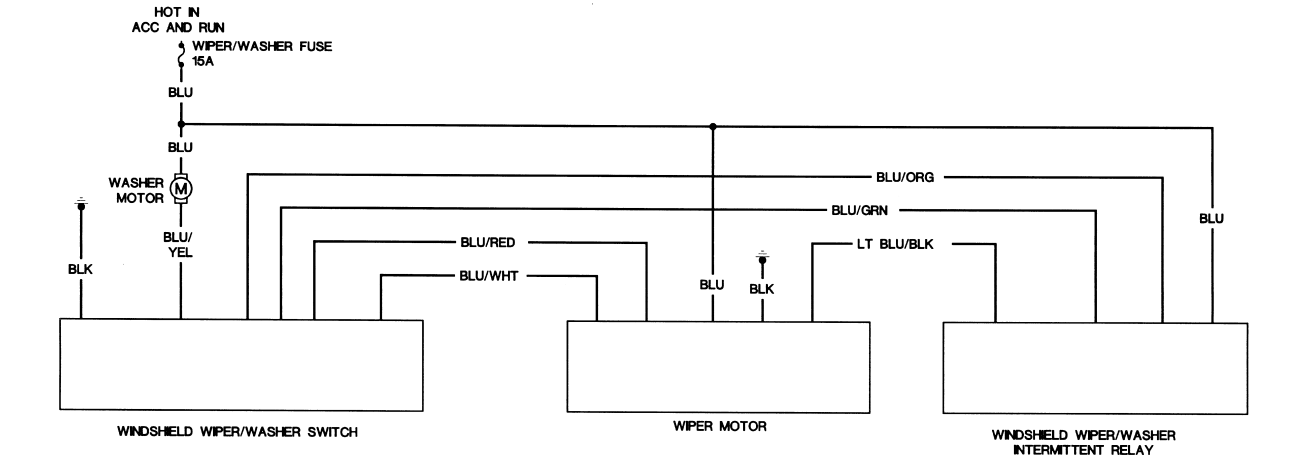
HOT IN ACC AND RUN
WIPER/WASHER FUSE 15A
BLU
BLU
WASHER MOTOR
M
BLU/ YEL
BLK
BLU/ORG
BLU/GRN
BLU
BLU/RED
BLU/WHT
LT BLU/BLK
BLU
BLK
WINDSHIELD WIPER/WASHER SWITCH
WIPER MOTOR
WINDSHIELD WIPER/WASHER INTERMITTENT RELAY

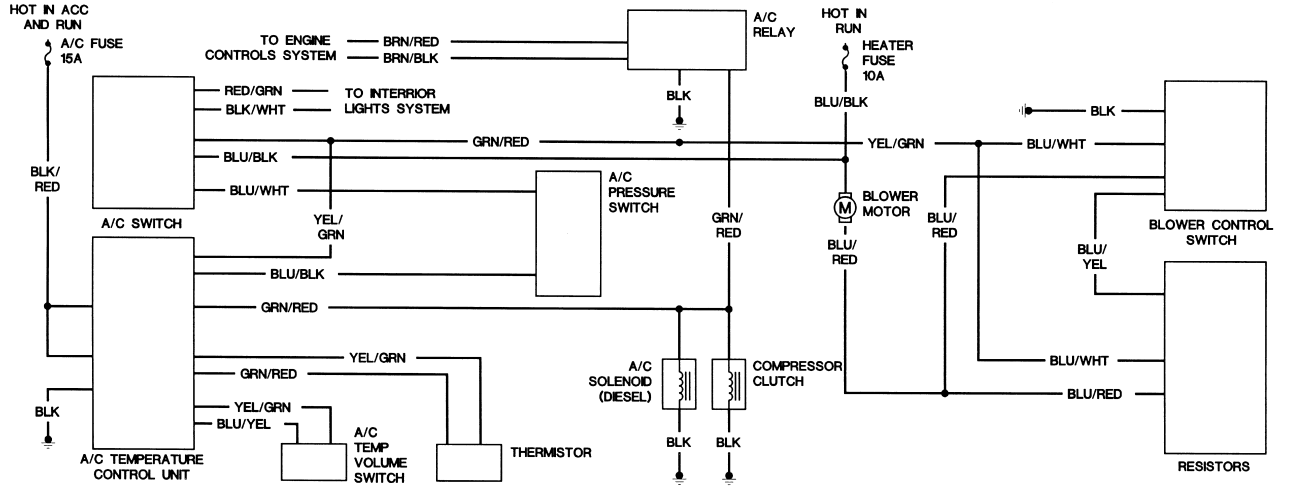
HOT IN ACC AND RUN
A/C FUSE 15A
TO ENGINE CONTROLS SYSTEM
BRN/RED
BRN/BLK
A/C RELAY
HOT IN RUN
HEATER FUSE 10A
RED/GRN
BLK/WHT
TO INTERIOR LIGHTS SYSTEM
BLK
BLU/BLK
BLK
GRN/RED
YEL/GRN
BLU/WHT
BLU/BLK
BLU/WHT
A/C PRESSURE SWITCH
BLOWER MOTOR
M
BLU/ RED
BLK/ RED
A/C SWITCH
YEL/ GRN
GRN/ RED
BLU/ RED
BLU/ YEL
BLOWER CONTROL SWITCH
BLU/BLK
GRN/RED
YEL/GRN
GRN/RED
YEL/GRN
BLU/YEL
A/C SOLENOID (DIESEL)
COMPRESSOR CLUTCH
BLU/WHT
BLU/RED
BLK
BLK
A/C TEMPERATURE CONTROL UNIT
A/C TEMP VOLUME SWITCH
THERMISTOR
BLK
BLK
RESISTORS