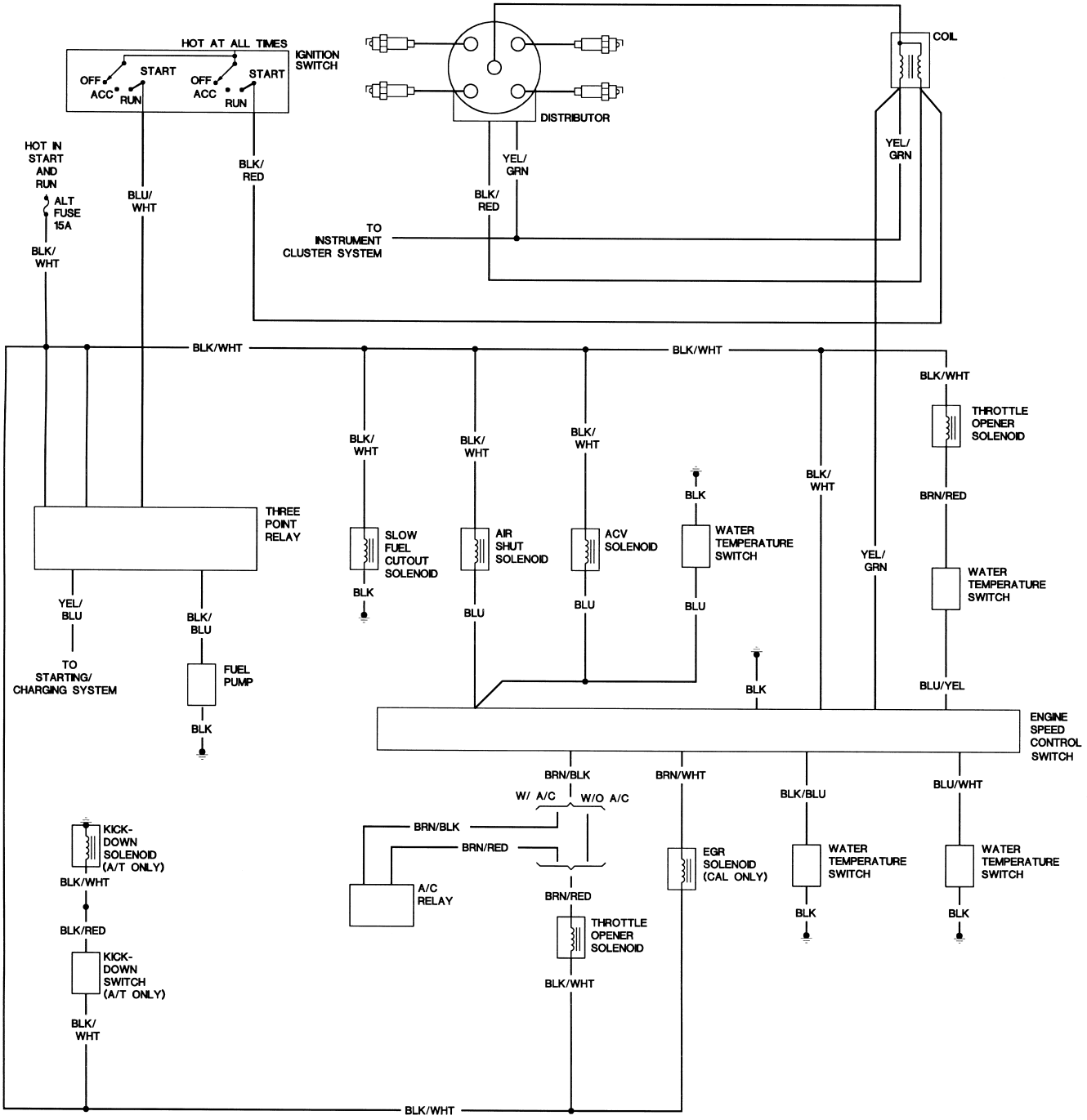
HOT AT ALL TIMES
IGNITION SWITCH
OFF
ACC
RUN
START
OFF
ACC
RUN
START
DISTRIBUTOR
COIL
HOT IN START AND RUN
ALT FUSE 15A
BLK/WHT
BLU/WHT
BLK/RED
YEL/GRN
BLK/RED
YEL/GRN
TO INSTRUMENT CLUSTER SYSTEM
BLK/WHT
BLK/WHT
BLK/WHT
THROTTLE OPENER SOLENOID
BLK/WHT
BLK/WHT
BLK/WHT
BLK
BLK/WHT
BRN/RED
THREE POINT RELAY
SLOW FUEL CUTOUT SOLENOID
AIR SHUT SOLENOID
ACV SOLENOID
WATER TEMPERATURE SWITCH
YEL/GRN
WATER TEMPERATURE SWITCH
BLK
BLU
BLU
BLU
YEL/BLU
BLK/BLU
TO STARTING/CHARGING SYSTEM
FUEL PUMP
BLK
BLK
BLU/YEL
ENGINE SPEED CONTROL SWITCH
BRN/BLK
BRN/WHT
BLK/BLU
BLU/WHT
W/ A/C
W/O A/C
BRN/BLK
BRN/RED
KICK-DOWN SOLENOID (A/T ONLY)
A/C RELAY
EGR SOLENOID (CAL ONLY)
WATER TEMPERATURE SWITCH
WATER TEMPERATURE SWITCH
BLK/WHT
BRN/RED
BLK
BLK
BLK/RED
THROTTLE OPENER SOLENOID
KICK-DOWN SWITCH (A/T ONLY)
BLK/WHT
BLK/WHT
BLK/WHT