1976

NEW MODEL TRAINING

SERVICE HIGHLIGHTS

BODY AND CHASSIS

COSMO

mazda

FOREWORD

Key changes, operation, description and service summary of MAZDA COSMO are explained in this booklet for service personnel of MAZDA authorized distributors and their dealers.

This booklet should be used to understand MAZDA COSMO.

All information , illustrations and specifications contained in this booklet were the best available at the time of printing this booklet.

Toyo Kogyo reserves the right to make changes in designs and specifications without previous notice.

TOYO KOGYO CO.,LTD.
HIROSHIMA, JAPAN

© 1975 TOYO KOGYO CO., LTD.
PRINTED IN JAPAN SEP. '75
3006-10-75 I

TABLE OF CONTENTS

CLUTCH
- DESCRIPTION & SERVICE SUMMARY 1

FIVE SPEED MANUAL TRANSMISSION
- DESCRIPTION 2

DIFFERENTIAL GEAR
- DESCRIPTION & SERVICE SUMMARY..... 3

FRONT SUSPENSION
- DESCRIPTION & DISASSEMBLED VIEW 4

REAR SUSPENSION
- DESCRIPTION & CONSTRUCTION 5
- DISASSEMBLED VIEW 6

BRAKE
- DESCRIPTION 7
- BRAKE CONTROL 8
- REAR BRAKES 9
- PARKING BRAKE CONSTRUCTION 10
- PARKING BRAKE ADJUSTMENT 11
- PIPING 12
- D.P.V. OPERATION ..... 13~15

BODY DIMENSIONS 16

REMOTE CONTROL MIRROR
- CONSTRUCTION 17
- OPERATION (MIRROR SIDE) 18
- OPERATION (SWITCH) 19
- SERVICE SUMMARY 20
- INSTALLATION ..... 21~22
- TROUBLE SHOOTING 23

FRONT DOOR WINDOW
- CONSTRUCTION 24
- ADJUSTMENT ..... 25~26
- POWER WINDOW (ELECTRICAL) 27
- POWER WINDOW (TROUBLE SHOOTING).. 28

CENTER WINDOW
- CONSTRUCTION & ADJUSTMENT 29

ENGINE HOOD
- DESCRIPTION 30
- ADJUSTMENT 31

FRONT BUMPER
- CONSTRUCTION 32

REAR BUMPER
- CONSTRUCTION 33

SEAT BELT
- DESCRIPTION & SERVICE SUMMARY.. 34~35
- SEAT BELT WARNING SYSTEM..... 36

SEAT
- DESCRIPTION 37

HEATER
- DESCRIPTION & CONSTRUCTION..... 38
- OPERATION ..... 39~41
- ELECTRICAL 42

AIR CONDITIONER
- REC-FRESH CONTROL..... 43
- THROTTLE OPENER ..... 44~45

INSTRUMENT PANEL
- DESCRIPTION 46
- METER HOOD 47
- CENTER PANEL..... 48

CLUTCH

•DESCRIPTION •SERVICE SUMMARY

DESCRIPTION

- The clutch system uses the same parts as the '75 RX-4.
- Automatic adjusting type.

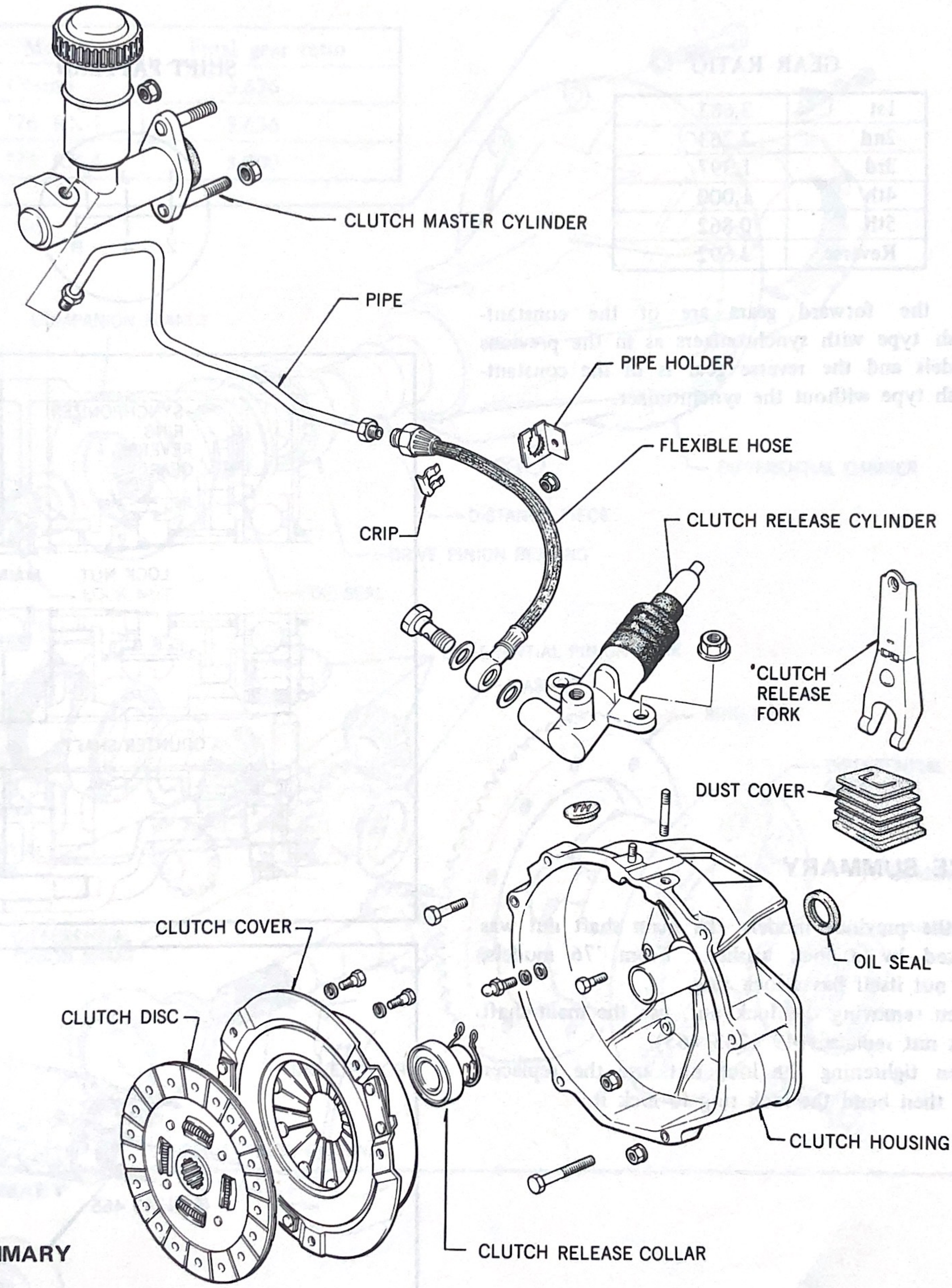

SERVICE SUMMARY

- Same as '75 RX-4.

FIVE SPEED MANUAL TRANSMISSION

•DESCRIPTION •SERVICE SUMMARY

DESCRIPTION

- Five speed transmission is available and the gear ratio is as follows.
- Shift pattern is shown in the figure.

GEAR RATIO

1st	3,683
2nd	2,263
3rd	1,397
4th	1,000
5th	0.862
Reverse	3.692

SHIFT PATTERN

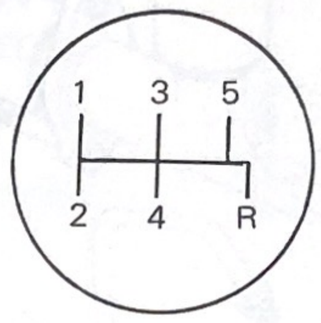

- All the forward gears are of the constant-mesh type with synchronizers as in the previous models and the reverse gear is of the constant-mesh type without the synchronizer.

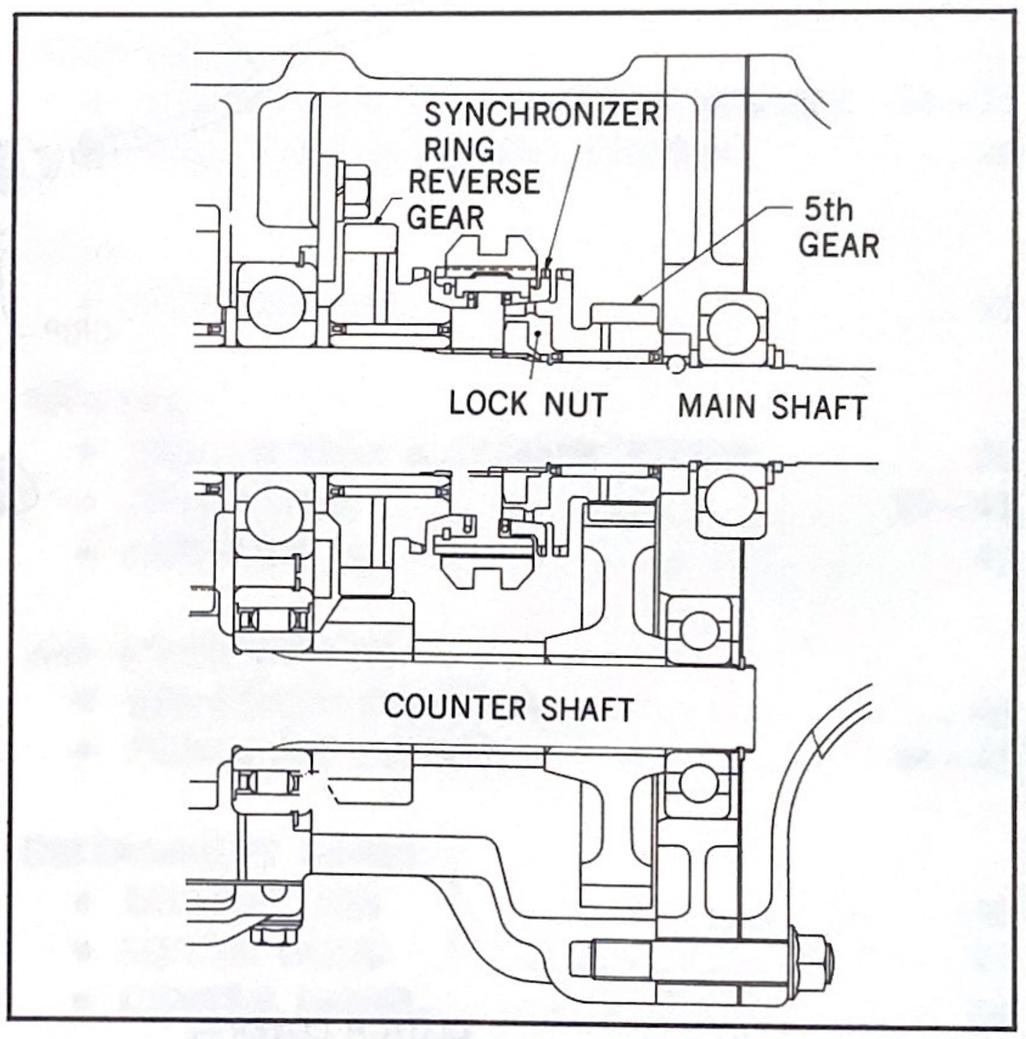

SERVICE SUMMARY

- In the previous models, the main shaft nut was locked by a lock washer. From '76 models, the nut itself has a lock ring.
When removing the lock nut, use the main shaft lock nut replacer (49 1243 465).
When tightening the lock nut, use the replacer and then bend the lock ring to lock it.

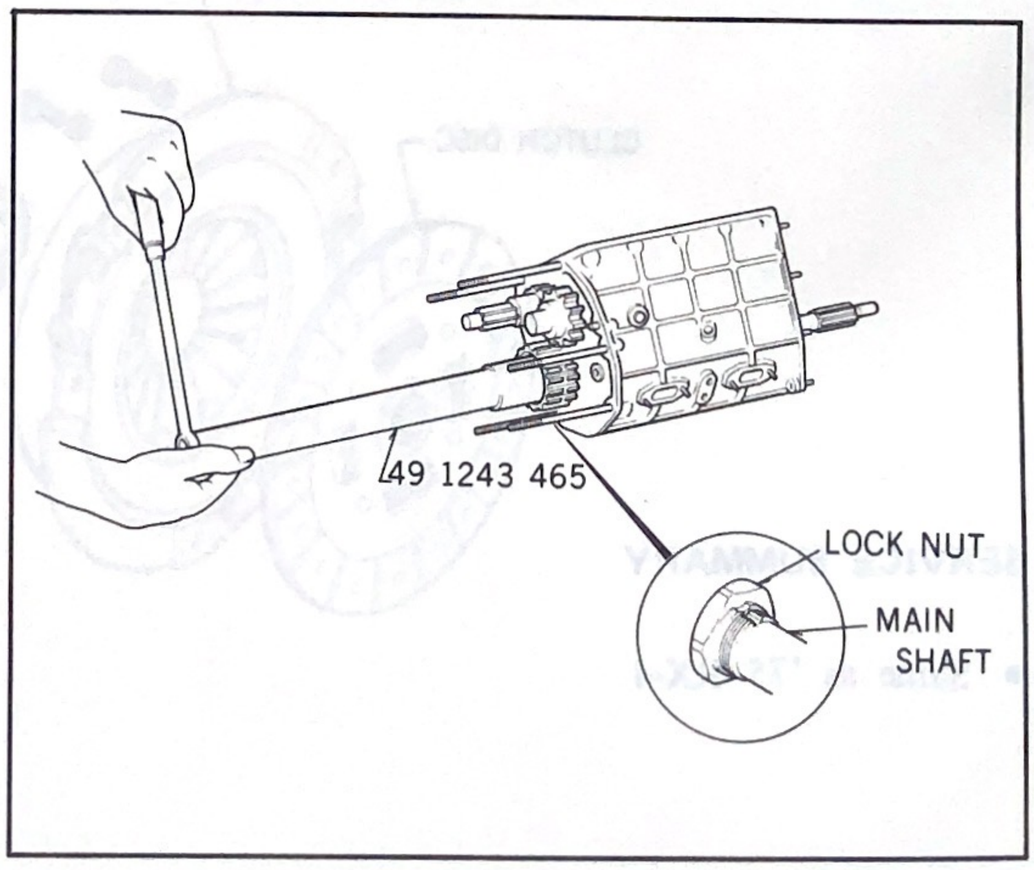

NOTE: Used lock nut can not be used again.

DIFFERENTIAL GEAR

•DESCRIPTION •SERVICE SUMMARY

DESCRIPTION

- '76 RX-4 differential gear has different gear ratio from '75 RX-4.
- Cosmo uses the same differential gear as '76 RX-4.

Model	Final gear ratio
Cosmo	3.636
'76 RX-4	3.636
'75 RX-4	3.900

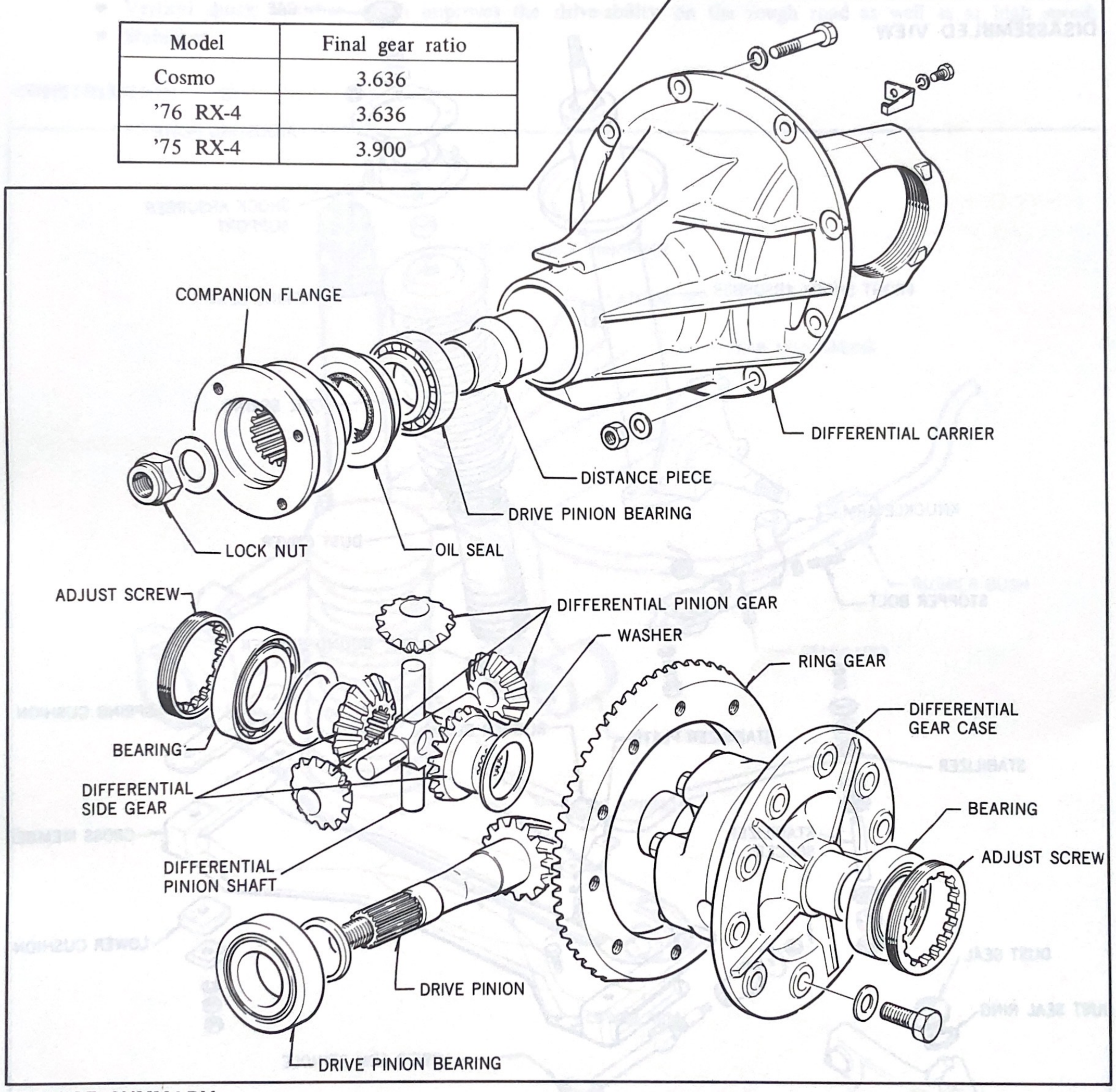

SERVICE SUMMARY

- Same as RX-4.

FRONT SUSPENSION

•DESCRIPTION •DISASSEMBLED VIEW

DESCRIPTION

- Cosmo uses almost the same parts as '76 RX-4 except for **SHOCK ABSORBER, COIL SPRING and STABILIZER.**
- '76 RX-4 consists of different parts from '75 RX-4 to improve the stability against steering shimmy.

DISASSEMBLED VIEW

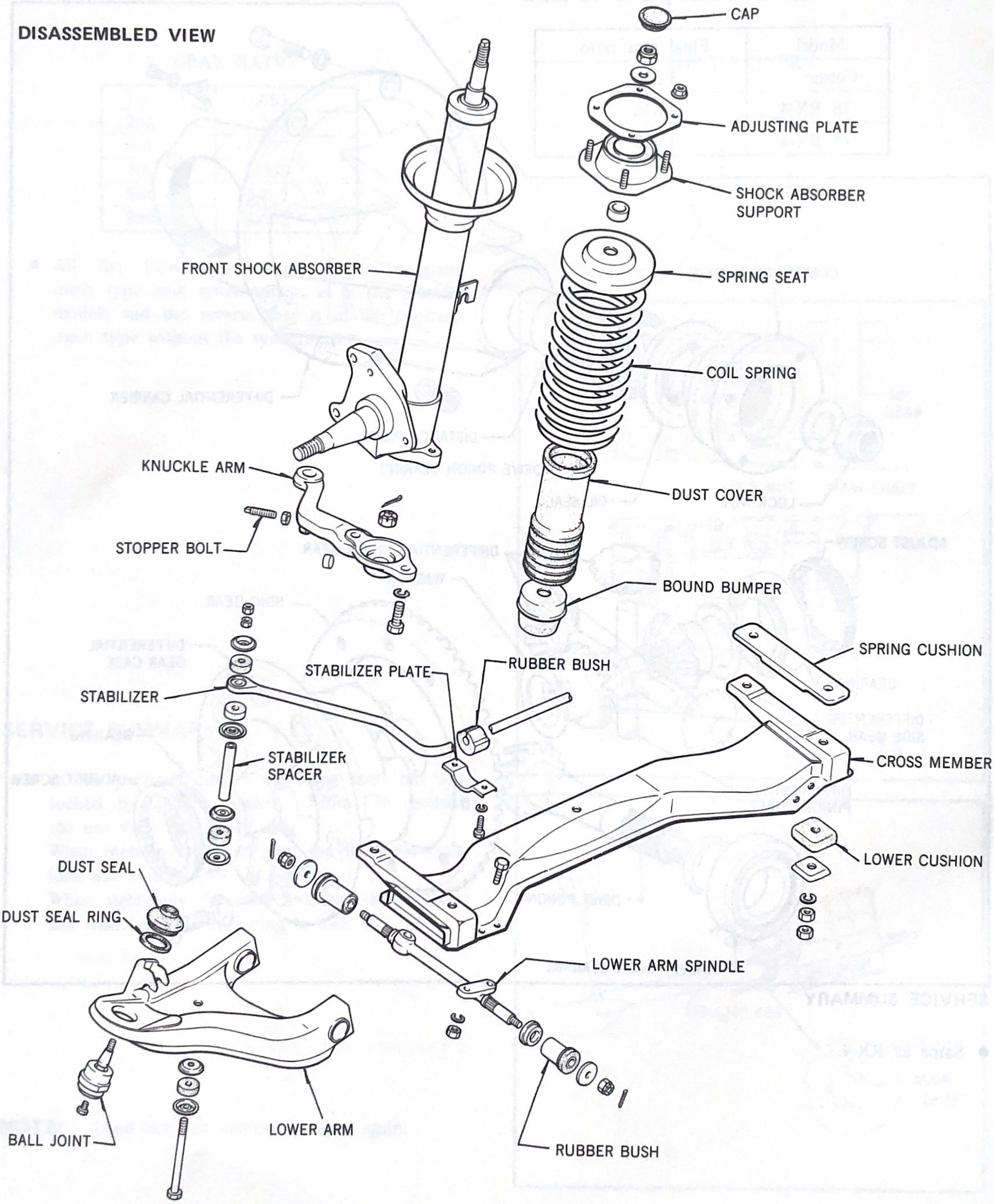

REAR SUSPENSION

•DESCRIPTION •CONSTRUCTION

DESCRIPTION

Rear suspension is the new type with

- Four link suspension with the lateral rod.
- Vertical shock absorber which improves the drive-ability on the rough road as well as at high speed.
- Stabilizer

CONSTRUCTION

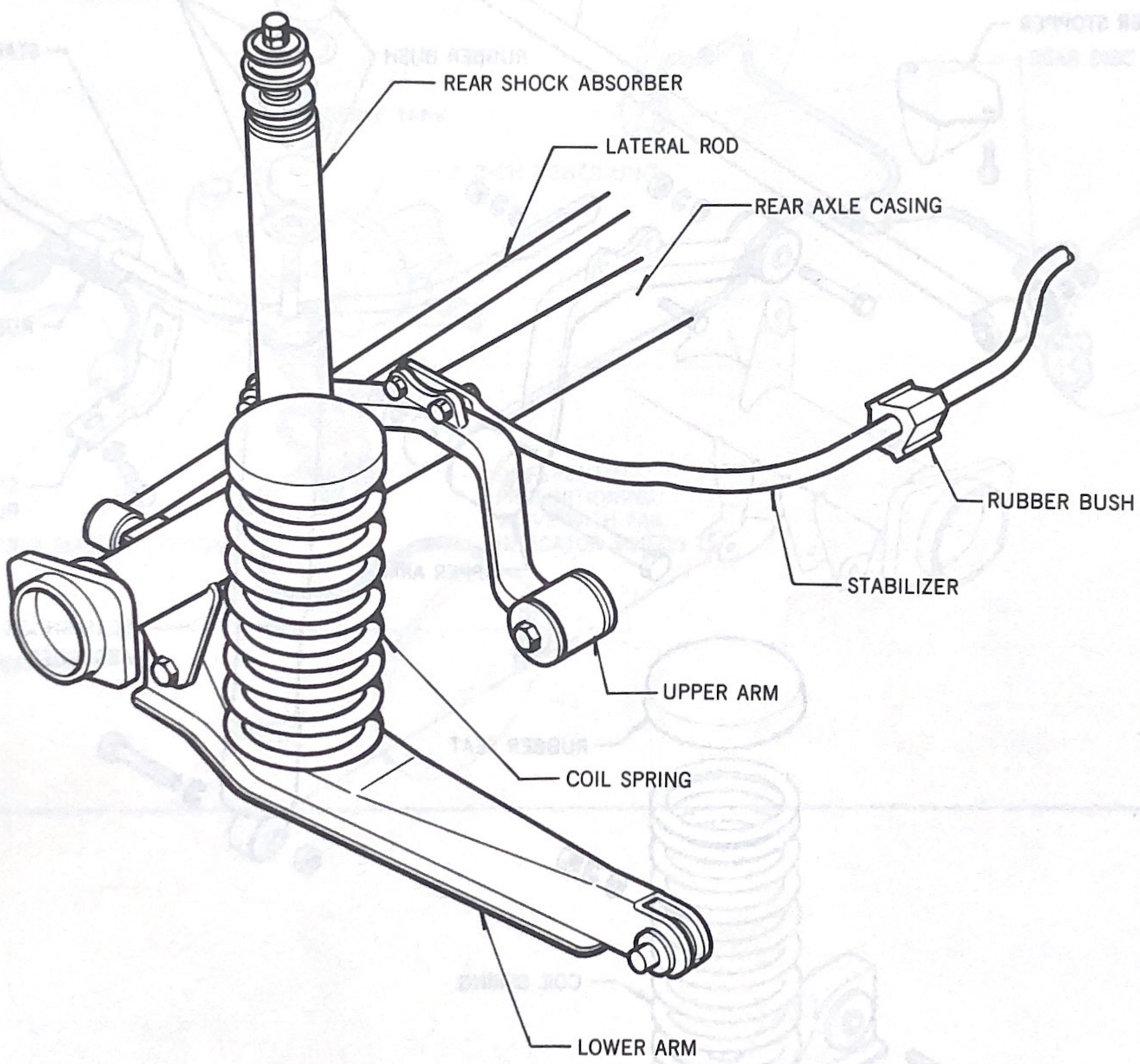

REAR SUSPENSION

•DISASSEMBLED VIEW

DISASSEMBLED VIEW

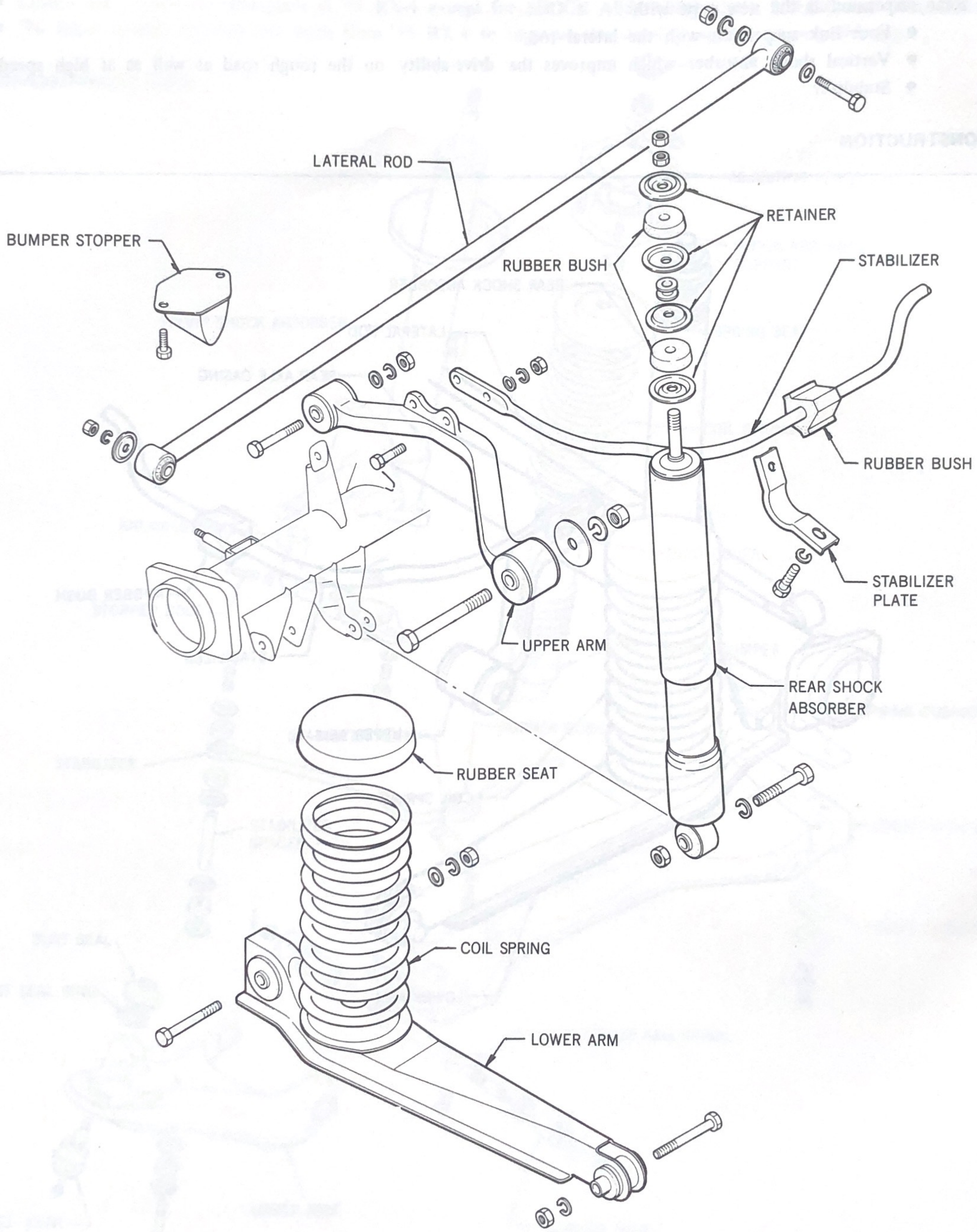

BRAKE

•DESCRIPTION

DESCRIPTION

- Front and rear wheels are equipped with the disc brakes. (four wheel disc brakes)
- Parking brake is a drum brake on the rear wheels which is operated by the parking brake lever through a wire.
- Differential proportioning valve controls the oil pressure to the rear wheels and prevents locking-up of the rear wheels before the front wheels in the case of the panic stop.

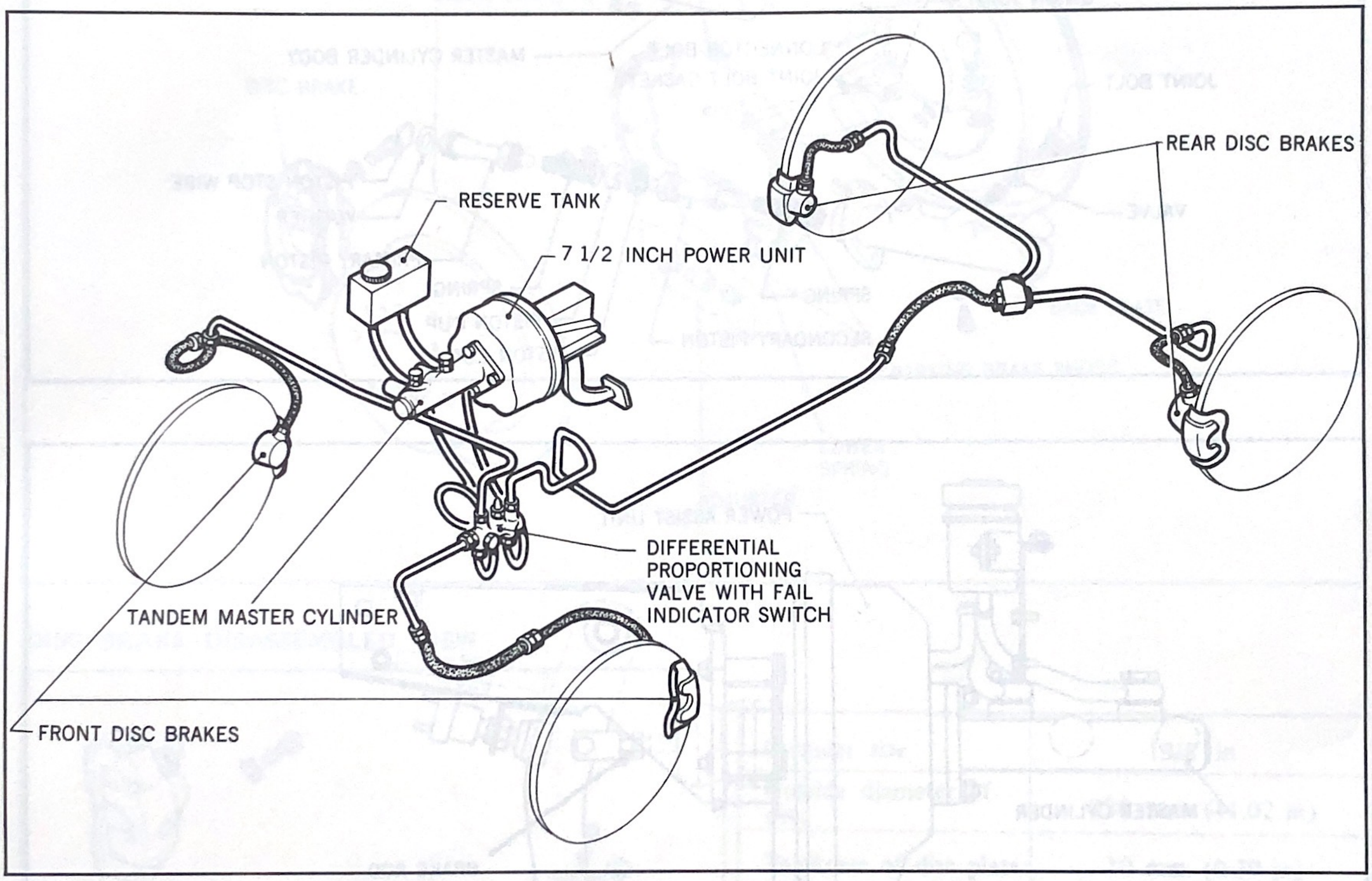

DESCRIPTION

- Brake master cylinder is of tandem type.
- Power assist unit is 7½ inch in diameter.

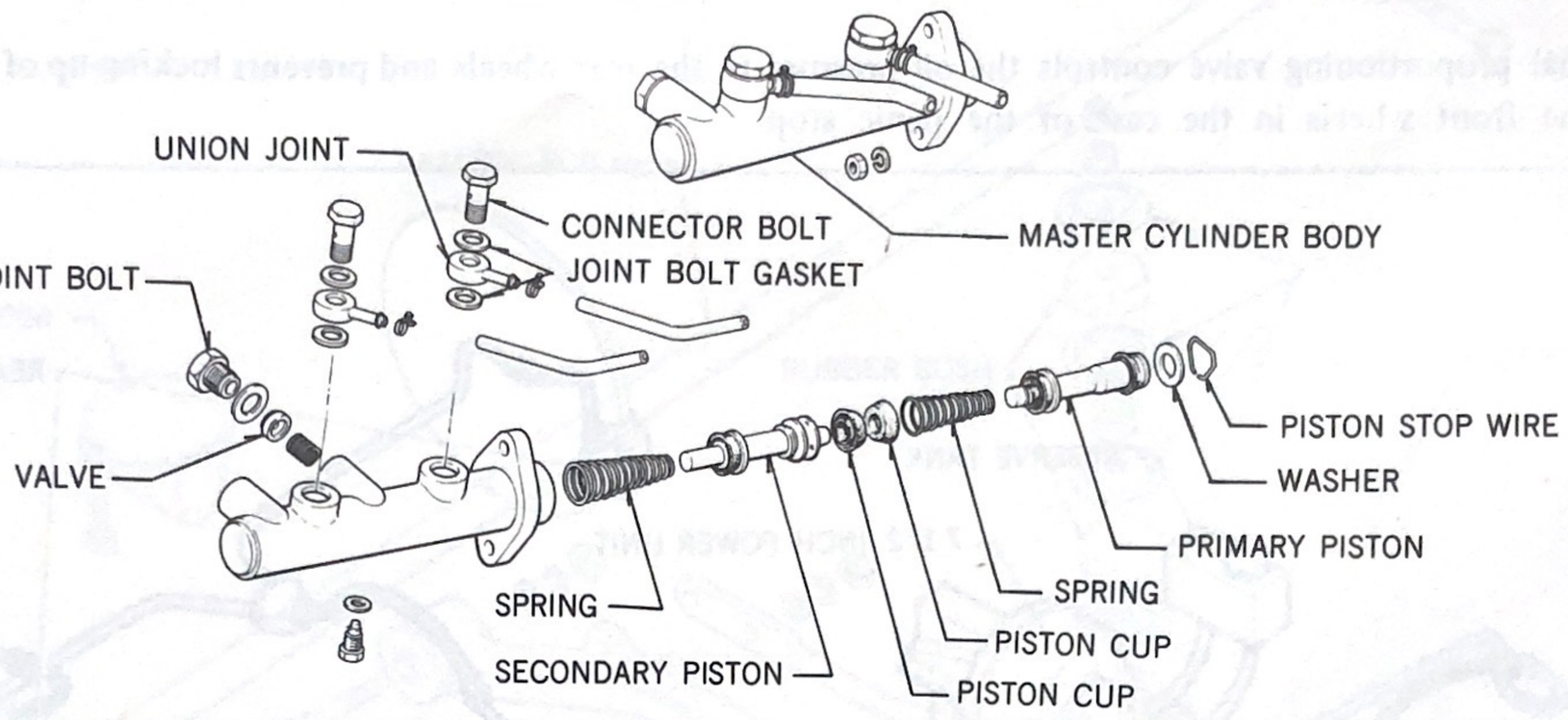

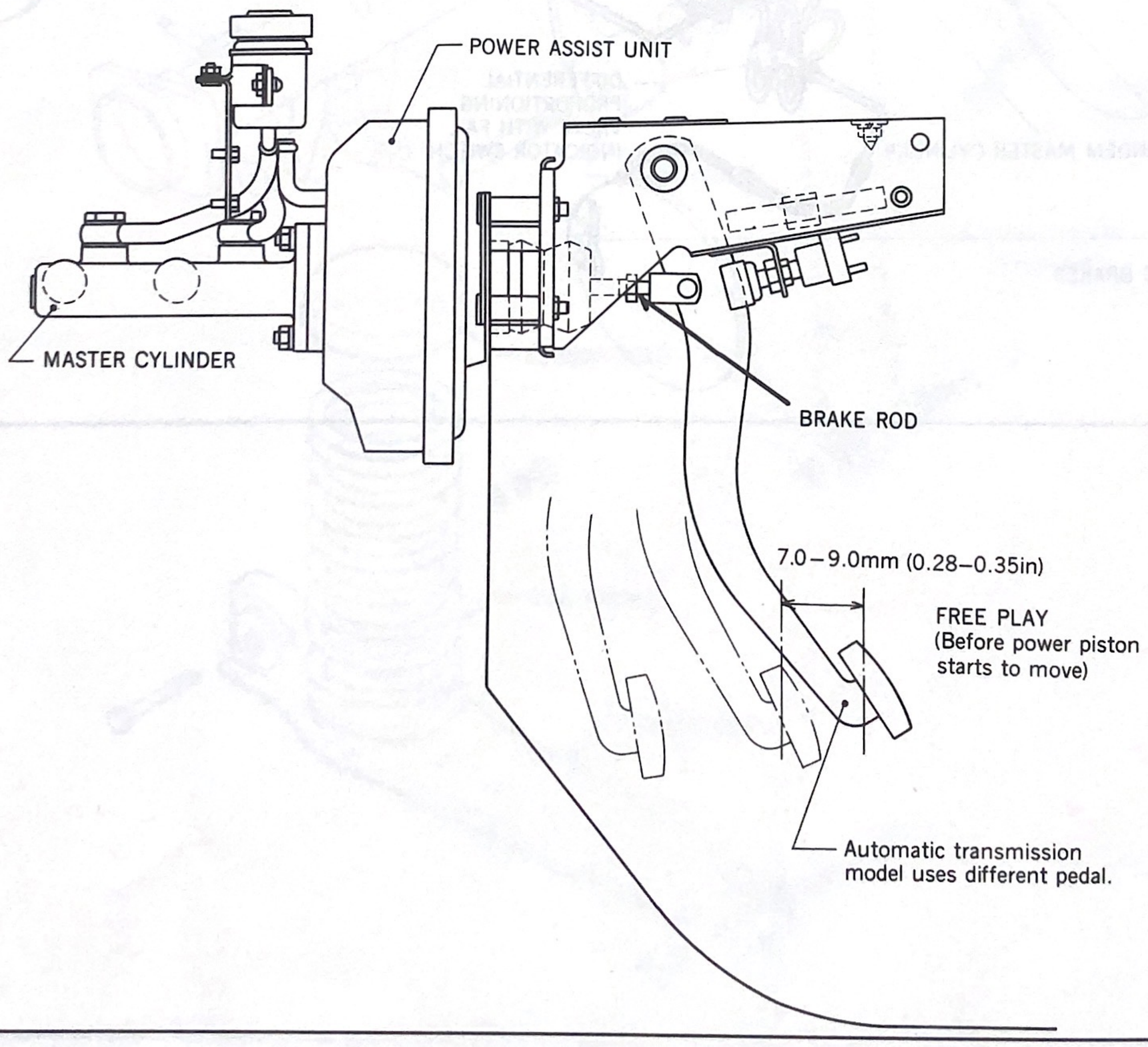

REAR BRAKE CONSTRUCTION

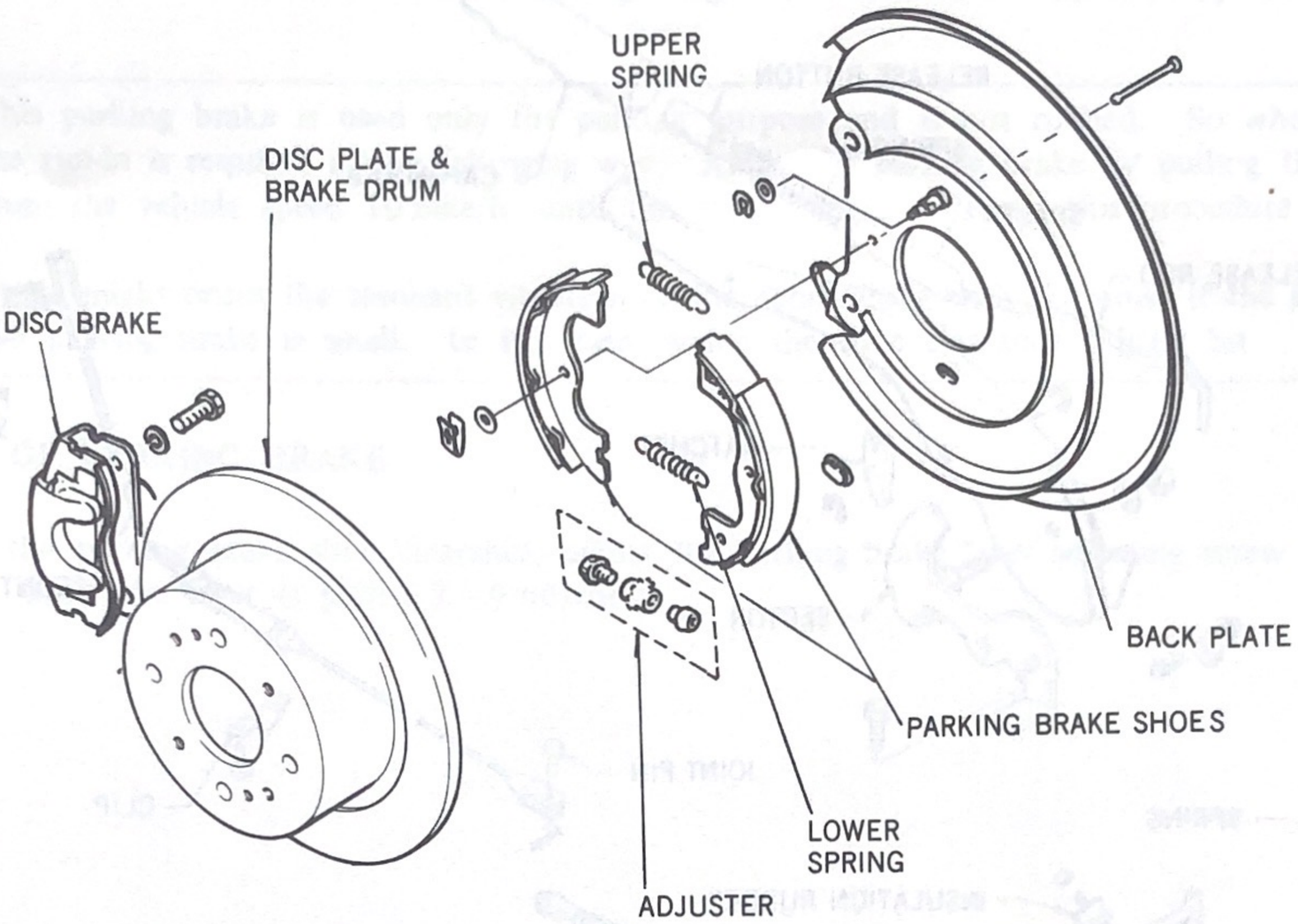

DISC BRAKE DISASSEMBLED VIEW

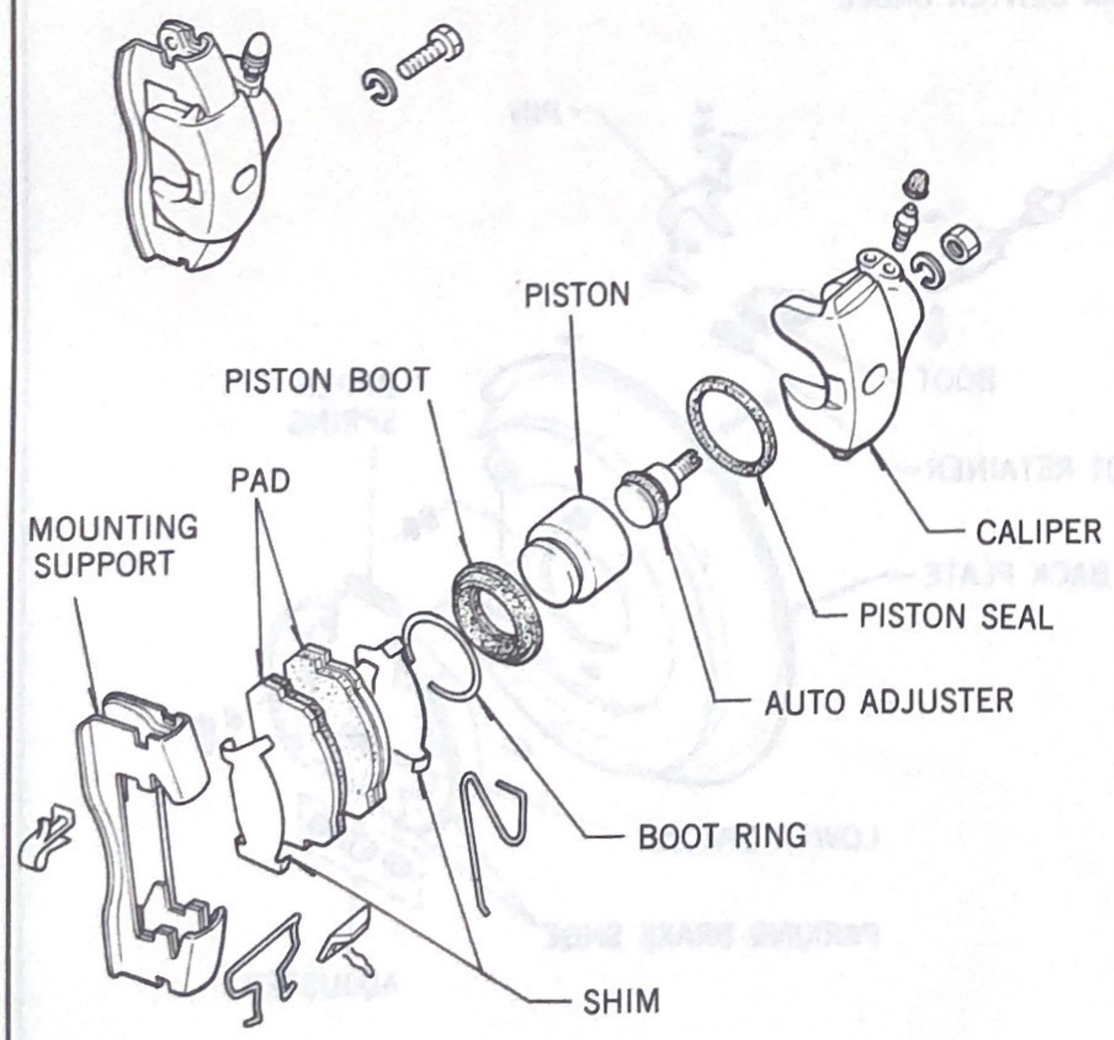

Cylinder size	13/8 in
Outside diameter of disc	280 mm (11.02 in)
Thickness of disc plate	10 mm (0.39 in)
Thickness of disc plate	6 mm (0.24 in)
Outside diameter of brake drum	165 mm (6.50 in)

SERVICE SUMMARY

- Disc pad can be replaced in the same way as that for RX-4 .

- When pushing back the piston of the disk brake, the reaction (resistance) is very big. This is because of the auto adjuster which prevents disc brake from draying.
  This reaction is approximately 150 lb.
  The special tool (49 0221 600 B) is available.

CONSTRUCTION

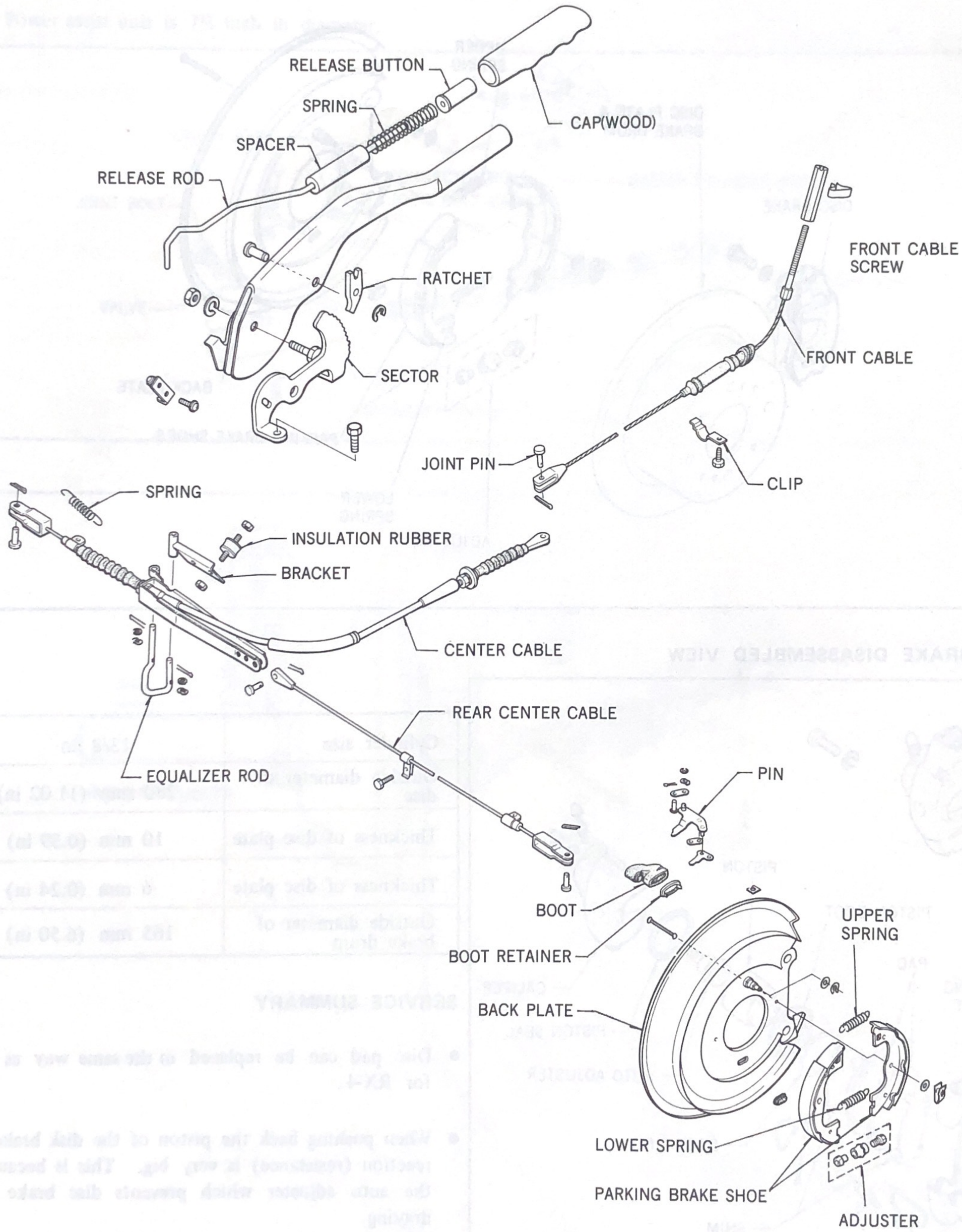

ADJUSTMENT

- SHOE CLEARANCE —— Turn the adjusting nut in the direction of the arrow on the backing plate until the drum is locked. Return the adjusting nut in the reverse direction by four to five notches.

NOTE:
1. This parking brake is used only for parking purpose and is not rubbed. So when it's overhauled, the run-in is required in the following way. Apply the parking brake by pulling the lever by 40 lb from the vehicle speed 10 mile/h until the vehicle stops. Repeat this procedure 5 times.
2. There might occur the resonant vibration of the cabin along with the noise if the shoe clearance of the parking brake is small. In this case, widen the shoe clearance a little bit.

- ADJUSTMENT OF PARKING BRAKE

After adjusting the parking brake shoe clearance, adjust the parking brake lever adjusting screw so that the brake begins to apply when the lever is pulled 7 ~ 9 notches.

DESCRIPTION

- Front brake piping uses the common pipes with RX-4.
  This is divided into the right and left at the differential proportioning valve.

- Rear brake piping through the differential proportioning valve and is divided into the right and left at the pipe joint.

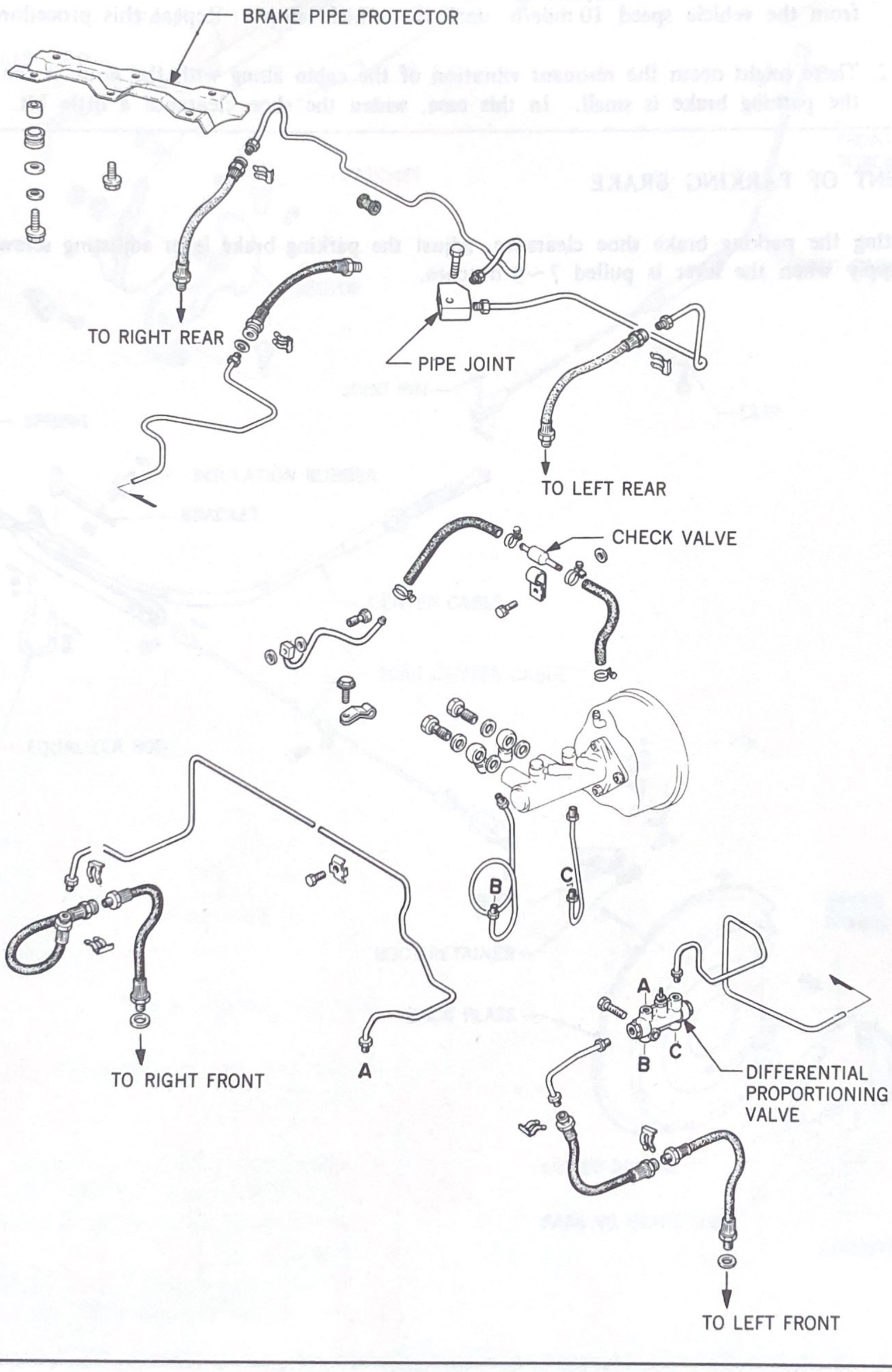

DIFFERENTIAL PROPORTIONING VALVE

•OPERATION 1

OPERATION

[NORMAL OPERATION]

1. When the front and the rear brakes are operating normally, the fluid pressure is carried from the master cylinder to each brake through the valve.
2. And the plunger A is centered by the fluid on both sides of the plunger.

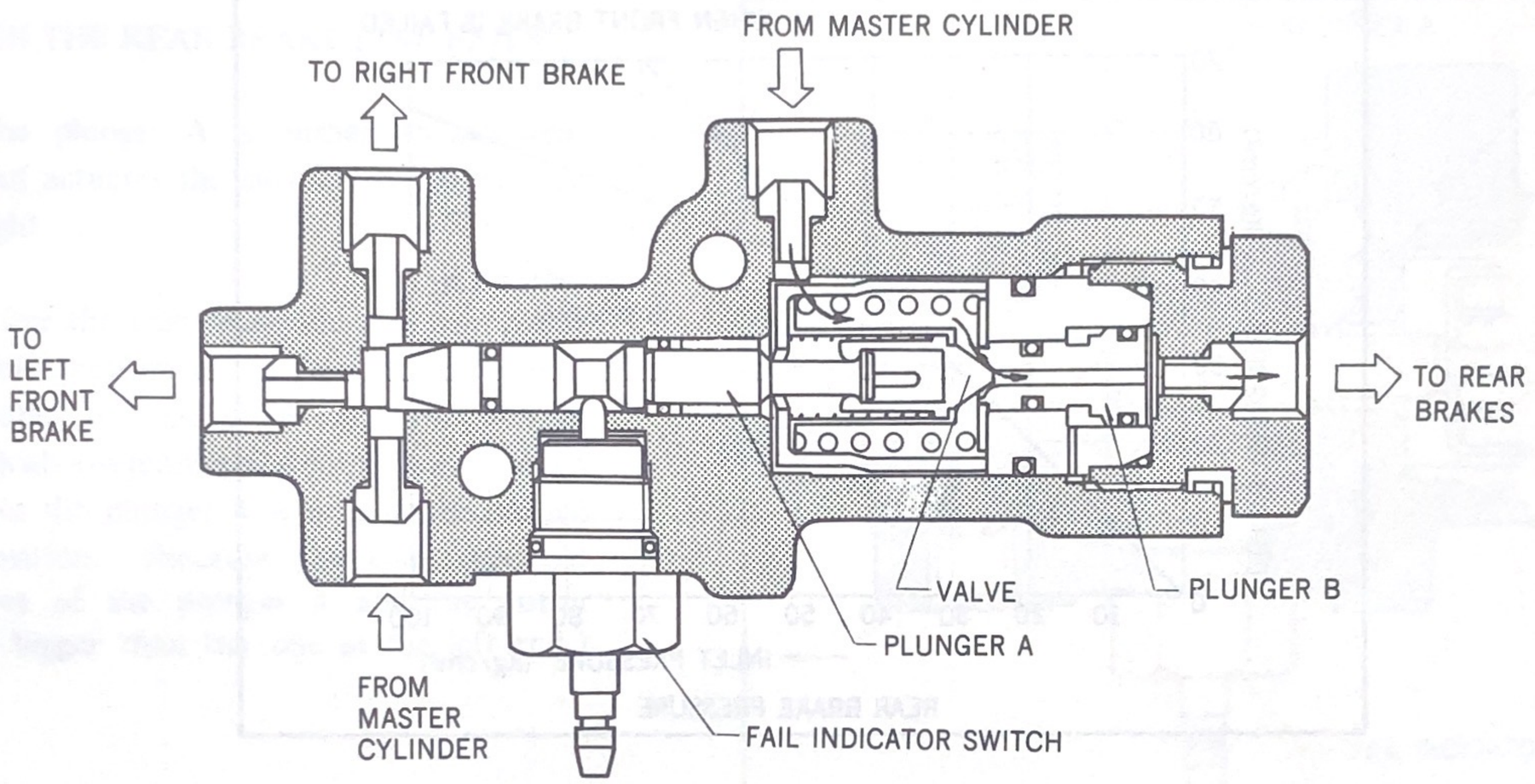

3. The fluid pressure in the rear brake line is controlled by the plunger B and the valve.

F_1 .... The force pushing the plunger B to the right

F_2 .... The force pushing the plunger B to the left

F_3 .... The set load of the spring

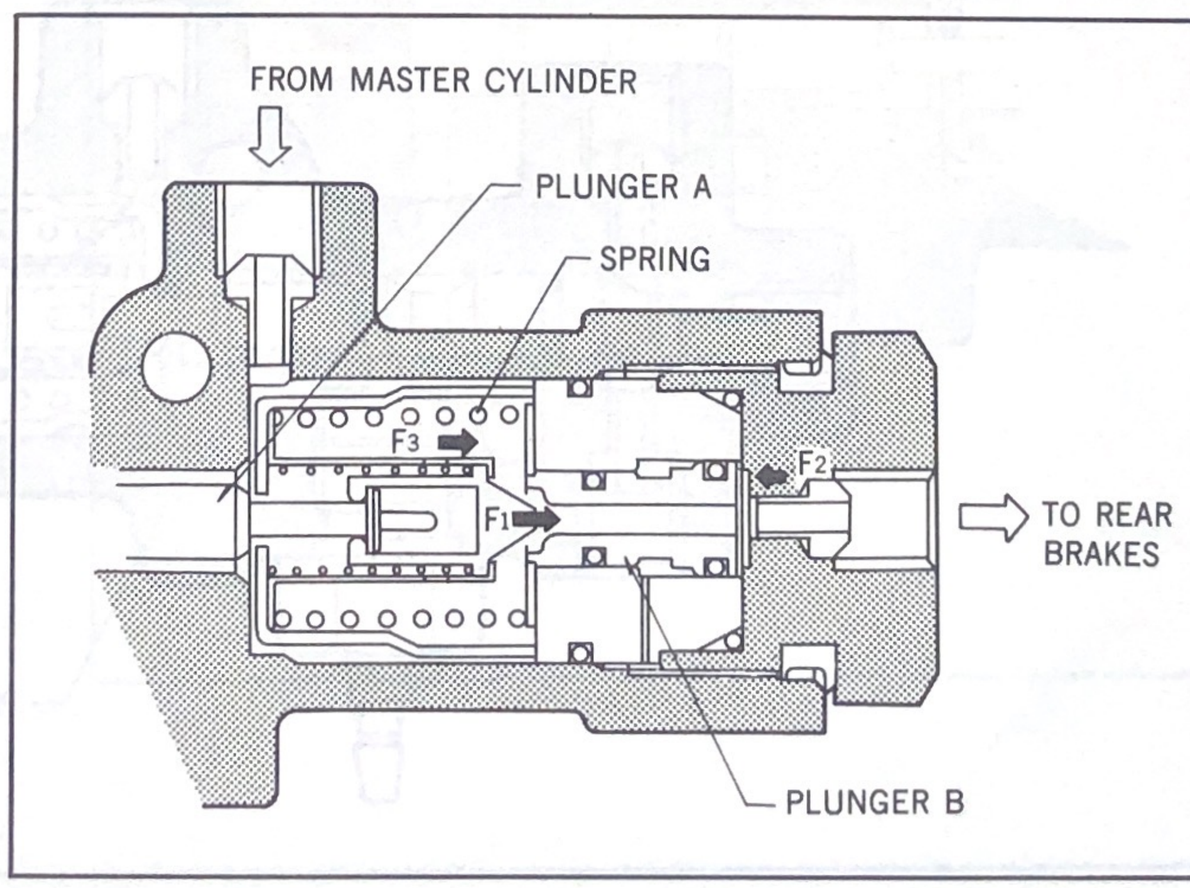

DIFFERENTIAL PROPORTIONING VALVE

•OPERATION 2

When the fluid pressure is low, the valve is open and the pressures on both sides of the plunger **B** are the same. The force F_2 is bigger than F_1 because the right end of the plunger **B** is bigger than the left in area.

While the fluid pressure being increased by the brake pedal, the difference of the forces ($F_2 - F_1$) on the plunger **B** gets bigger and overcomes the set load of the spring at specified fluid pressure. This moves the plunger **B** to the left to close the valve and stop carrying the pressure to the rear brake line until the force F_1 gets high enough so that the pressure difference $F_2 - F_1$ is lowered to the set load of the spring F_3. (The plunger **B** is balanced by the forces F_1, F_2, F_3 so that the pressure in the rear brake line is lowered to a specified ratio.)

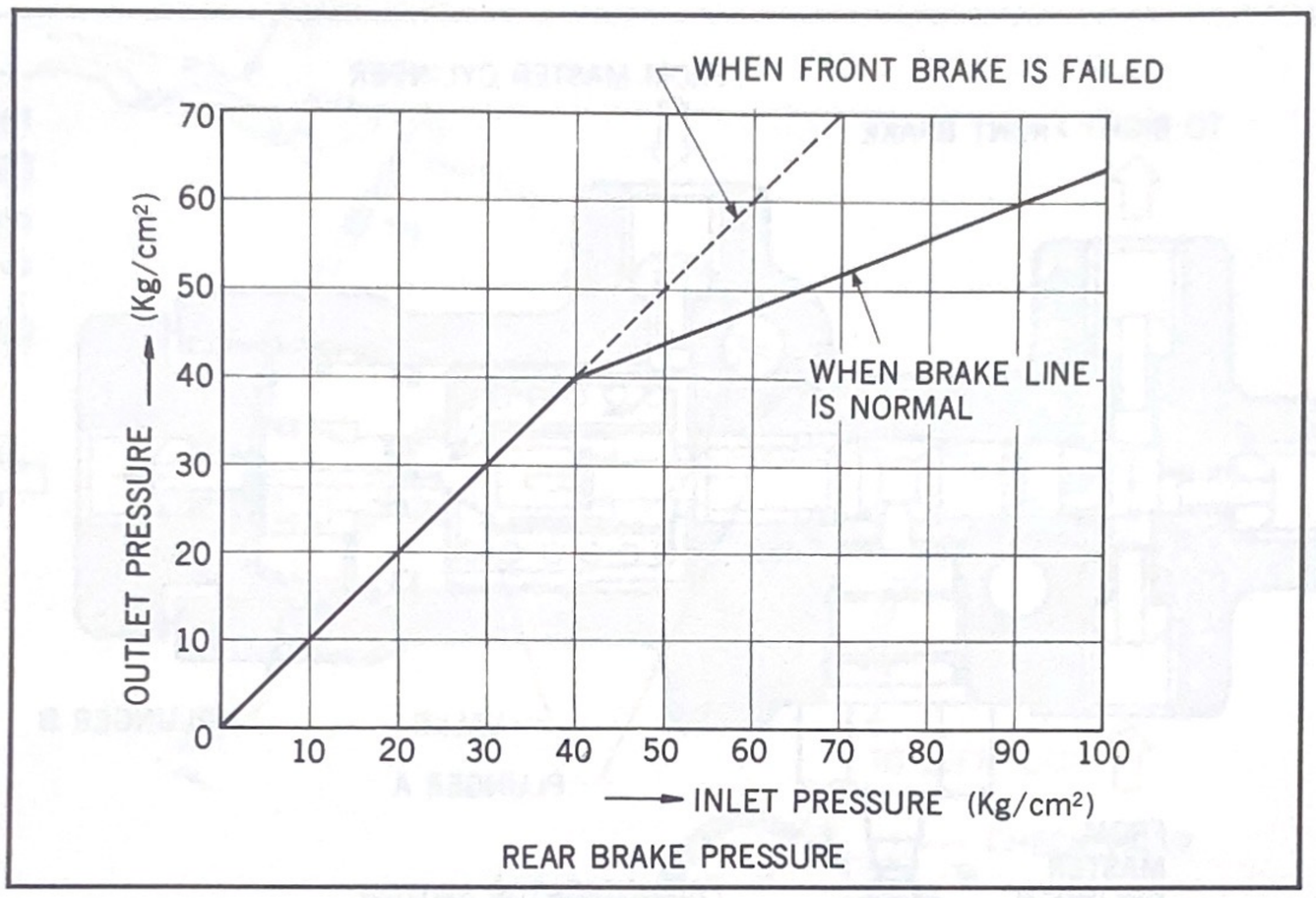

[WHEN FRONT BRAKE LINE FAILS]

When the front brake line fails, the pressure on the rear brake line pushes the plunger **A** to the left. This plunger movement pulls the valve to the left to open the valve and the valve stops functioning as a proportioning valve.

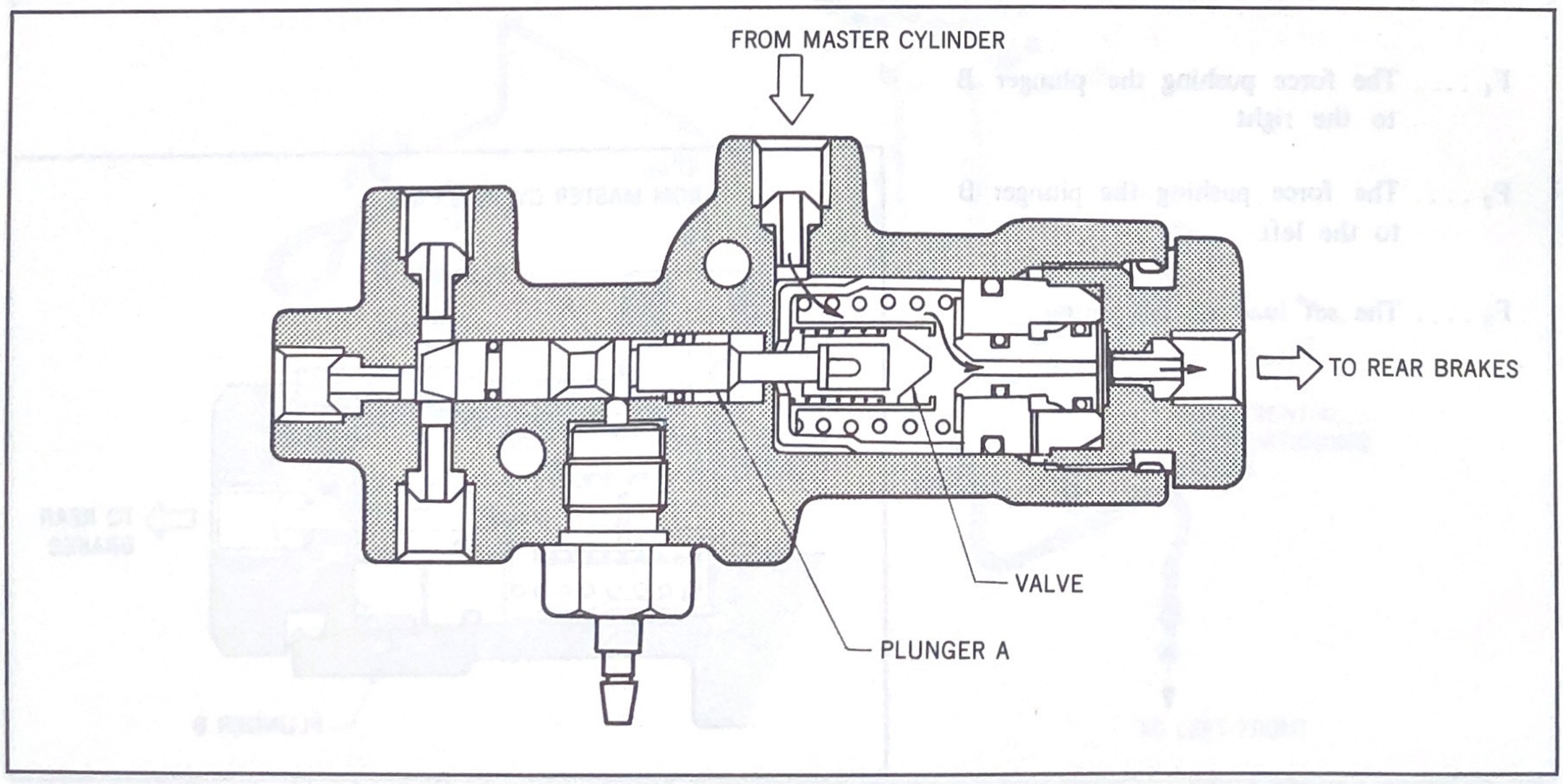

[OPERATION OF FAIL INDICATOR]

When one section of the brake line fails, the pressure on one side of the plunger A gets lower than the other side. And the higher pressure on the normally functioning side pushes the plunger A to the other side to actuate the switch for the warning light.

[CENTERING MECHANISM OF THE PLUNGER A]

The plunger A is centered in the following way.

WHEN THE REAR BRAKE LINE FAILS:

1. The plunger A is pushed to the right and actuates the switch for the warning light.

2. After the rear brake line is repaired, the fluid pressure of the rear brake line works on the piston and the plunger which overcomes the force from the left and the plunger A returns to the normal position. (because the total sectional area of the plunger A and the piston is bigger than the one at the left end.)

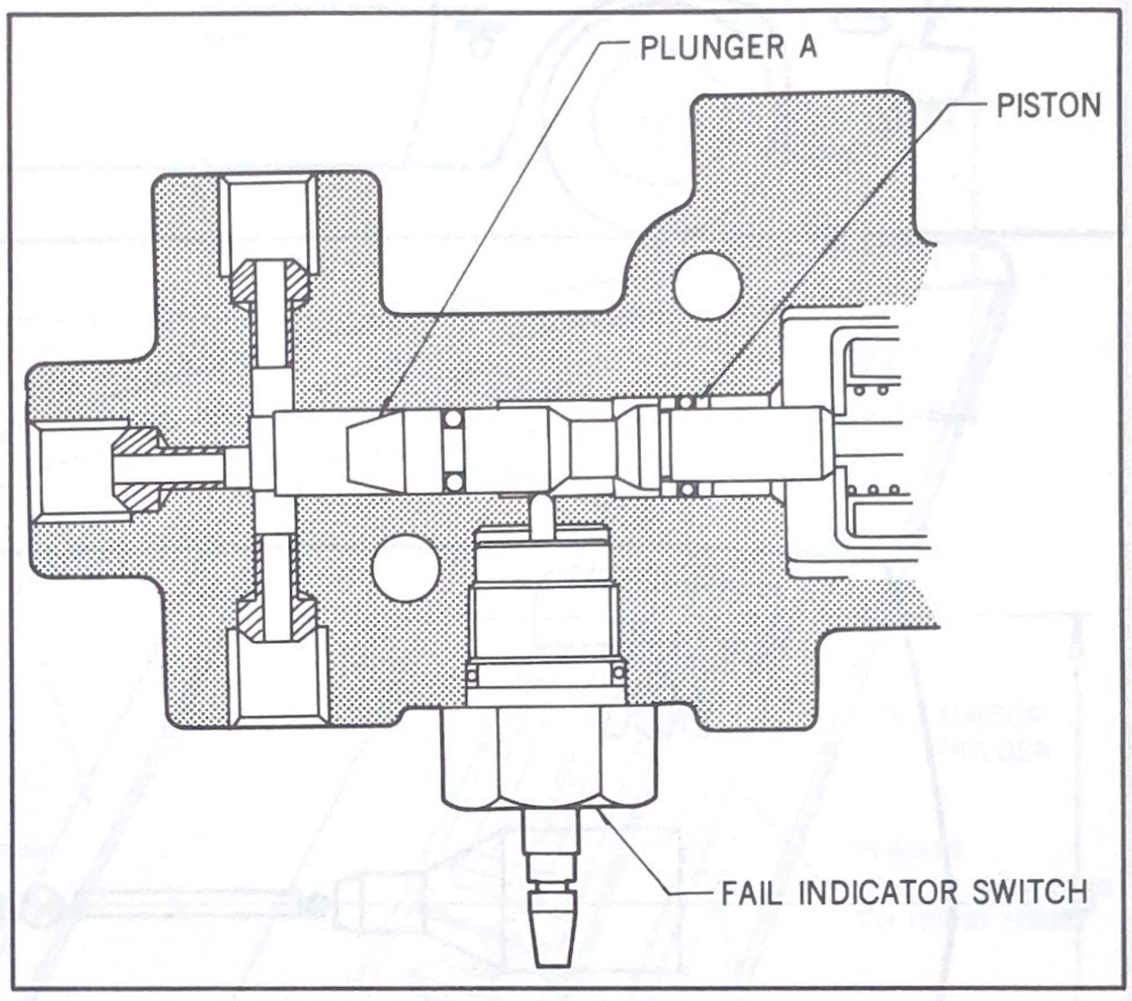

WHEN THE FRONT BRAKE LINE FAILS:

1. The plunger A is pushed to the left (but not the piston) by the pressure of the rear brake line and actuates the switch.
2. After the front brake line is repaired, the fluid pressure of the front brake line pushes the left end of the plunger A which overcomes the force from the right, because the left end has bigger sectional area than the right.
   Consequently, the plunger A is centered.

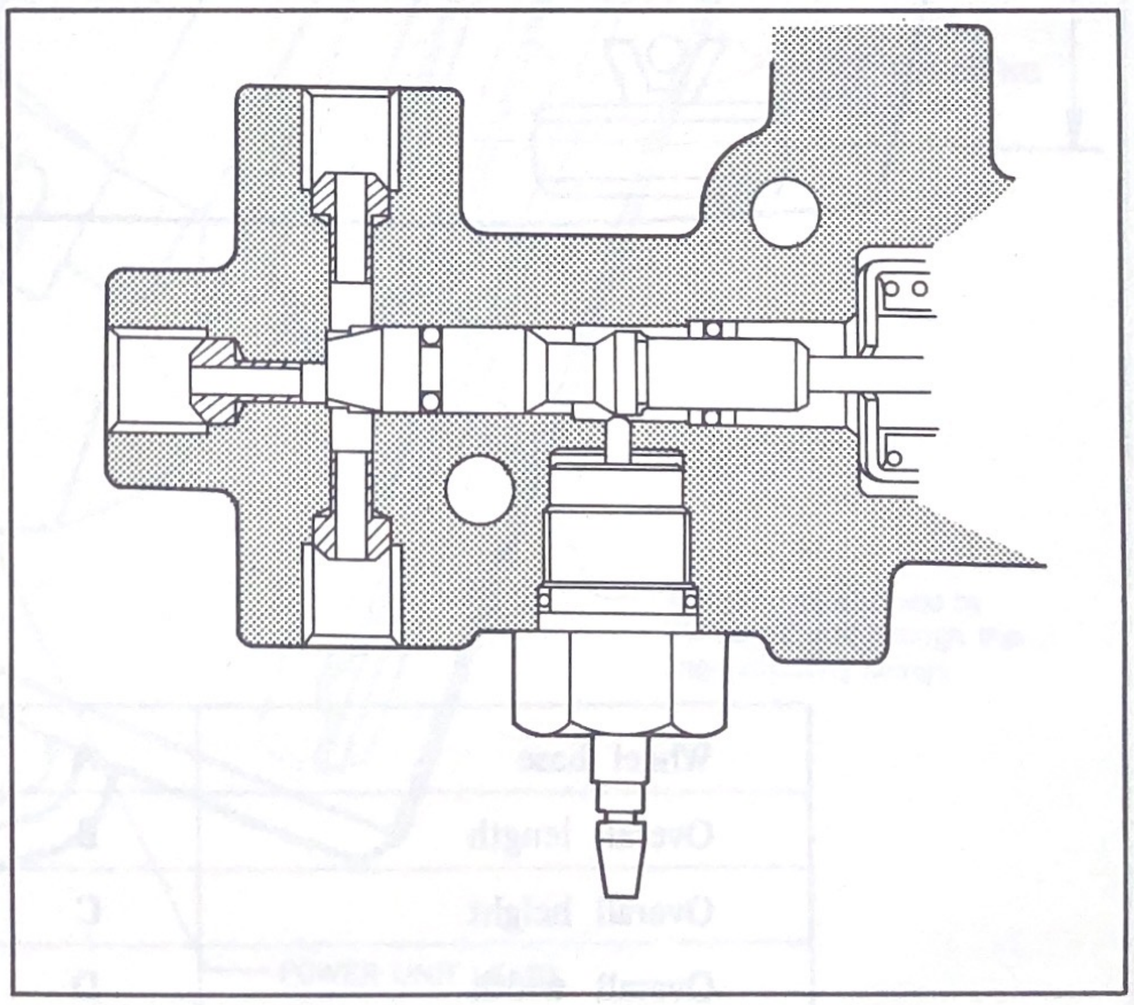

BODY

• DIMENSIONS

DIMENSIONS

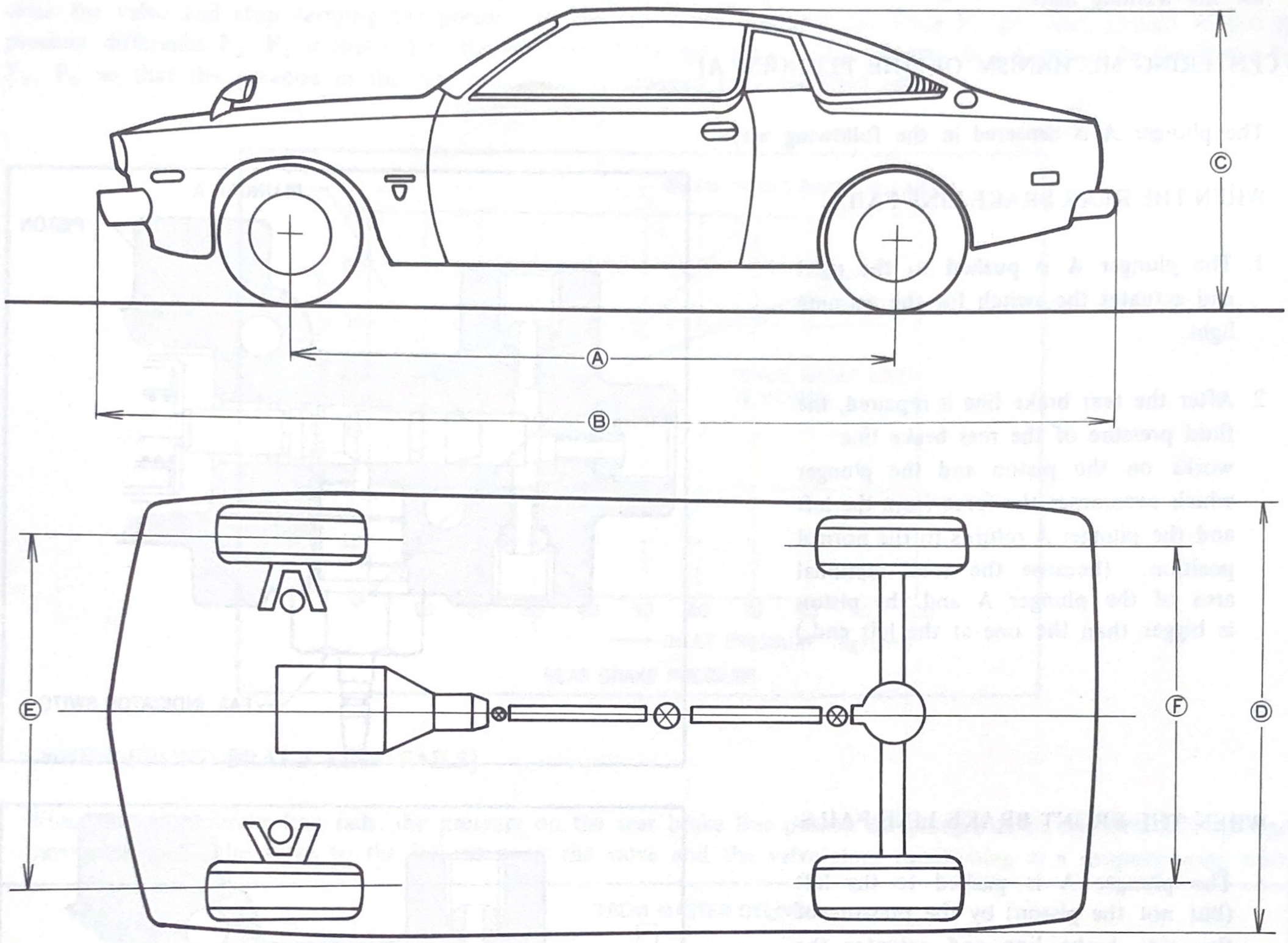

Wheel base	A	2510 mm (99 in)
Overall length	B	4615 mm (182 in)
Overall height	C	1315 mm (52 in)
Overall width	D	1685 mm (66 in)
Tread-front	E	1380 mm (54 in)
rear	F	1370 mm (54 in)

REMOTE CONTROL MIRROR

•CONSTRUCTION

CONSTRUCTION

- Remote control mirror consists of the power unit, the angle adjusting strings and the mirror holder with the mirror on it. The power unit actuates two angle adjusting strings, one of which adjusts the horizontal angle of the mirror and the other the vertical angle.

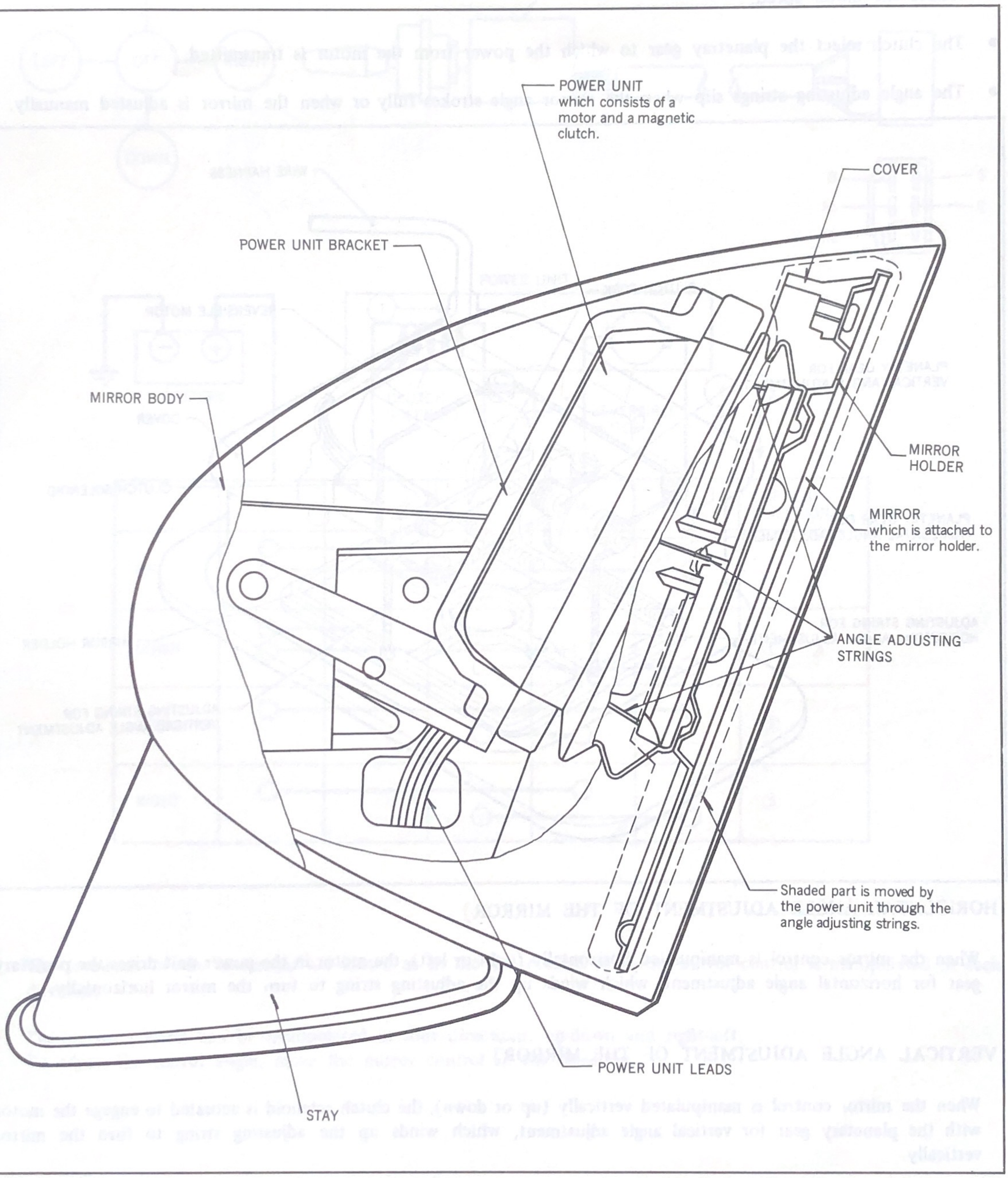

REMOTE CONTROL MIRROR

•OPERATION (MIRROR SIDE)

OPERATION

- The mirror angle is adjusted by the angle adjusting strings which are wound up by the planetary gear.
- The motor drives the horizontal angle adjusting planetary gear and the vertical angle adjusting planetary gear which reduce the motor speed.
- The clutch select the planetray gear to which the power from the motor is transmitted.
- The angle adjusting strings slip when the mirror angle strokes fully or when the mirror is adjusted manually.

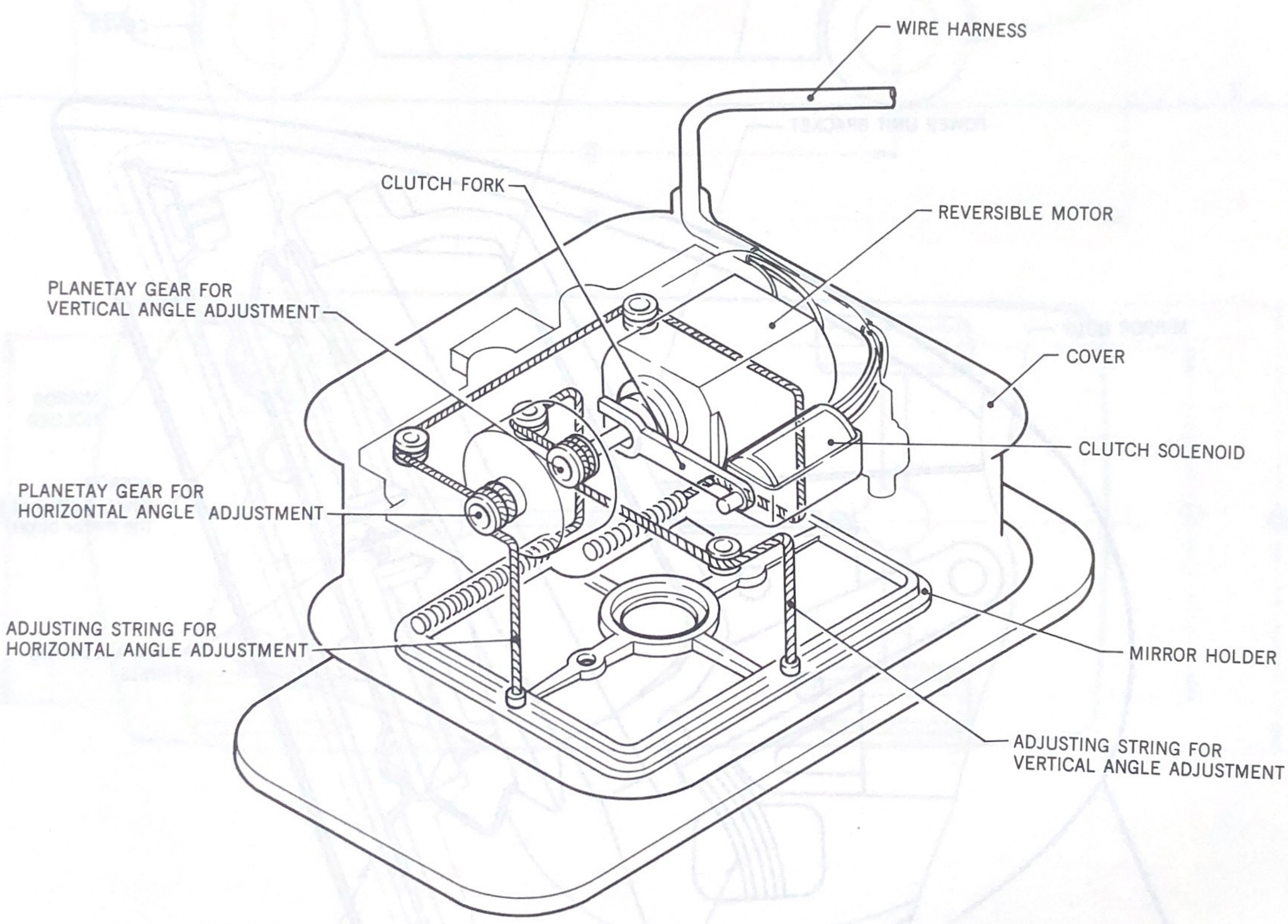

〔HORIZONTAL ANGLE ADJUSTMENT OF THE MIRROR〕

When the mirror control is manipulated horizontally (right or left), the motor in the power unit drives the planetary gear for horizontal angle adjustment, which winds up the adjusting string to turn the mirror horizontally.

〔VERTICAL ANGLE ADJUSTMENT OF THE MIRROR〕

When the mirror control is manipulated vertically (up or down), the clutch solenoid is actuated to engage the motor with the planetary gear for vertical angle adjustment, which winds up the adjusting string to turn the mirror vertically.

REMOTE CONTROL MIRROR

•OPERATION (SWITCH)

OPERATION

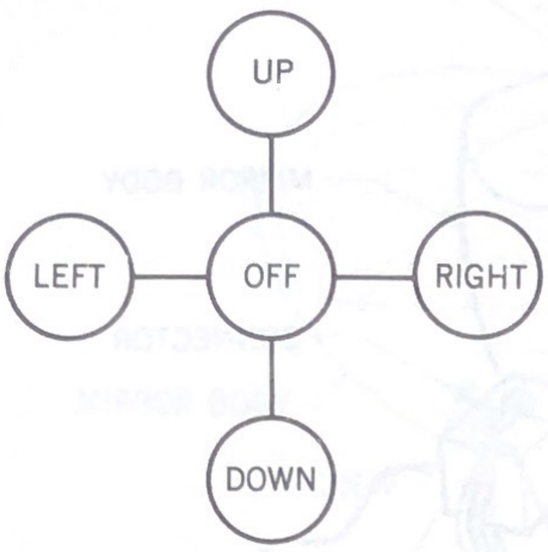

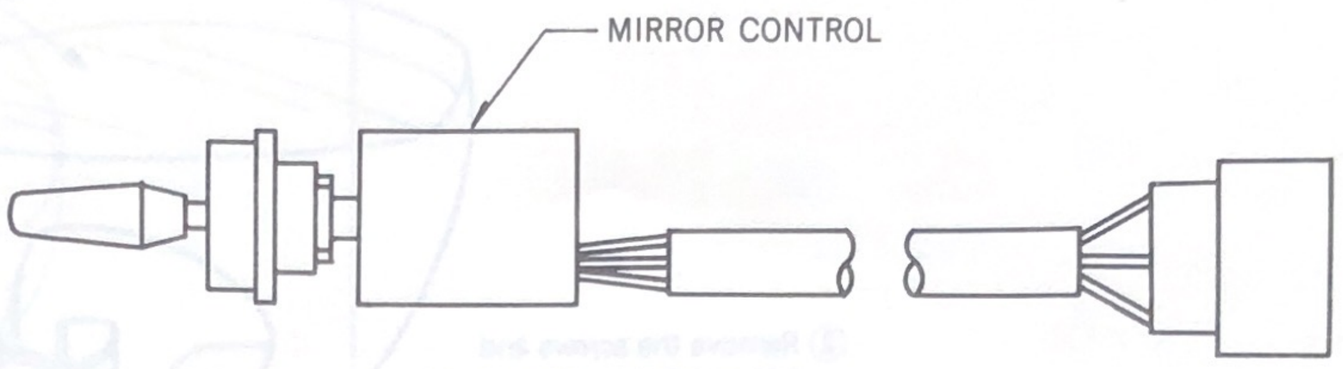

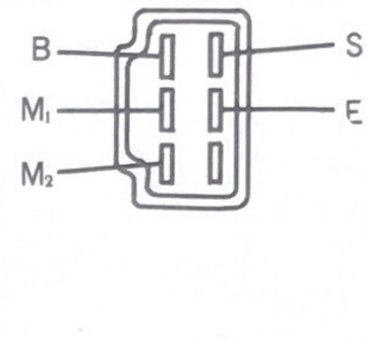

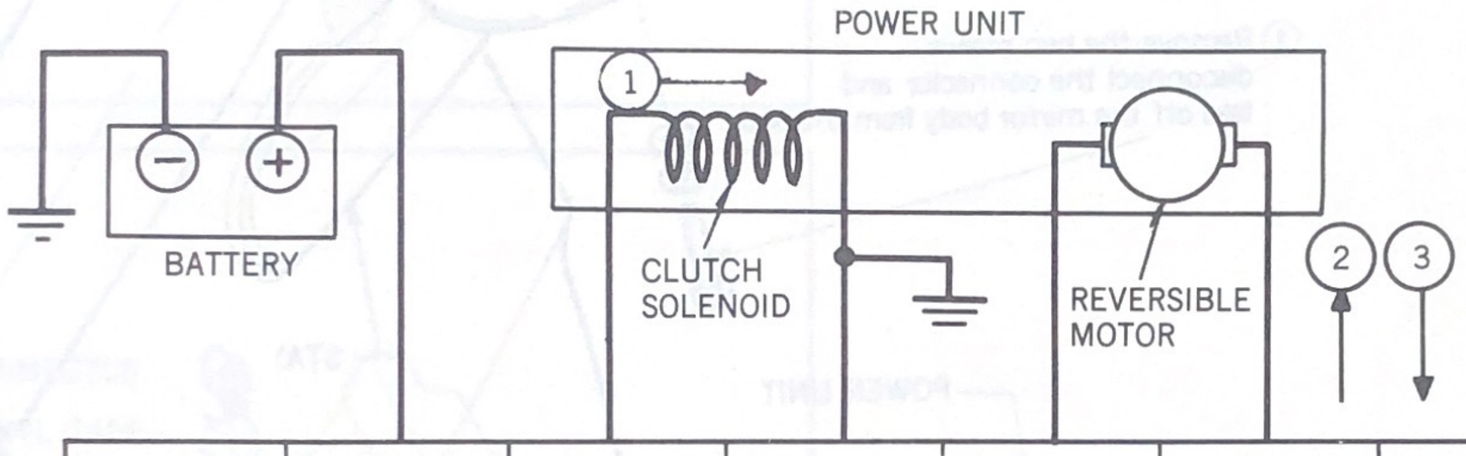

	B	S	E	M_1	M_2	CURRENT DIRECTION
UP	○	○		○	○	① ②
DOWN	○	○		○	○	① ③
LEFT	○		○	○	○	②
RIGHT	○		○	○	○	③

- The terminals of the connector are closed as in the above table when the mirror control is manipulated in each direction.

- The mirror control can be manipulated in four directions, up-down and right-left.
  To adjust the mirror angle, move the mirror control in the direciton.

SERVICE SUMMARY

In replacing the power unit of the remote control mirror, follow the procedures.

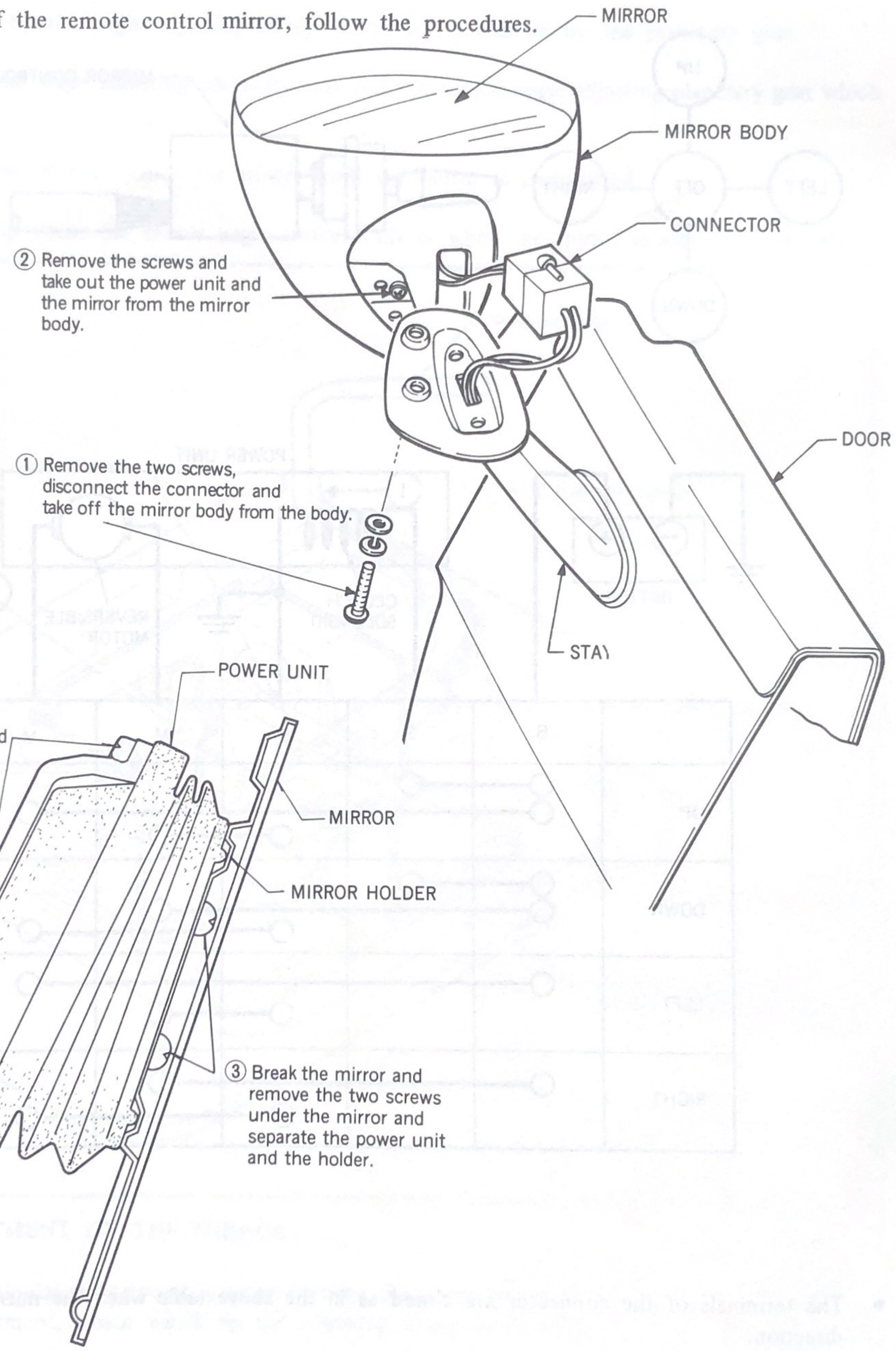

NOTE:
1. After breaking the mirror, take off all the pieces of mirror from the holder.
2. After installing the holder on the power unit, attach the mirror on the holder with cement. Pay attention not to reverse the order. Otherwise you need another mirror.

REMOTE CONTROL MIRROR

•INSTALLATION 1

INSTALLATION

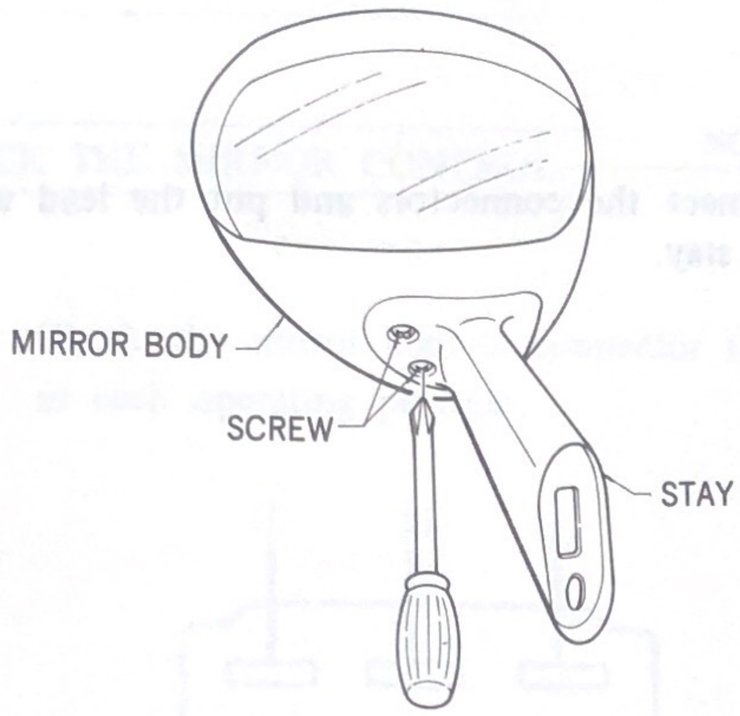

1. Untighten the screw and separate the mirror body and the stay.

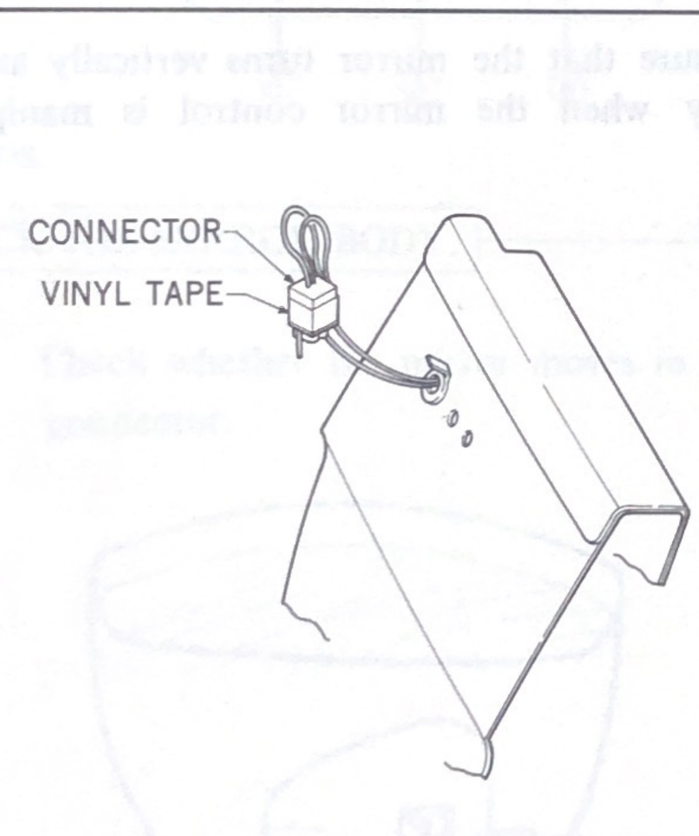

2. Take off the vinyl tape from the connector.

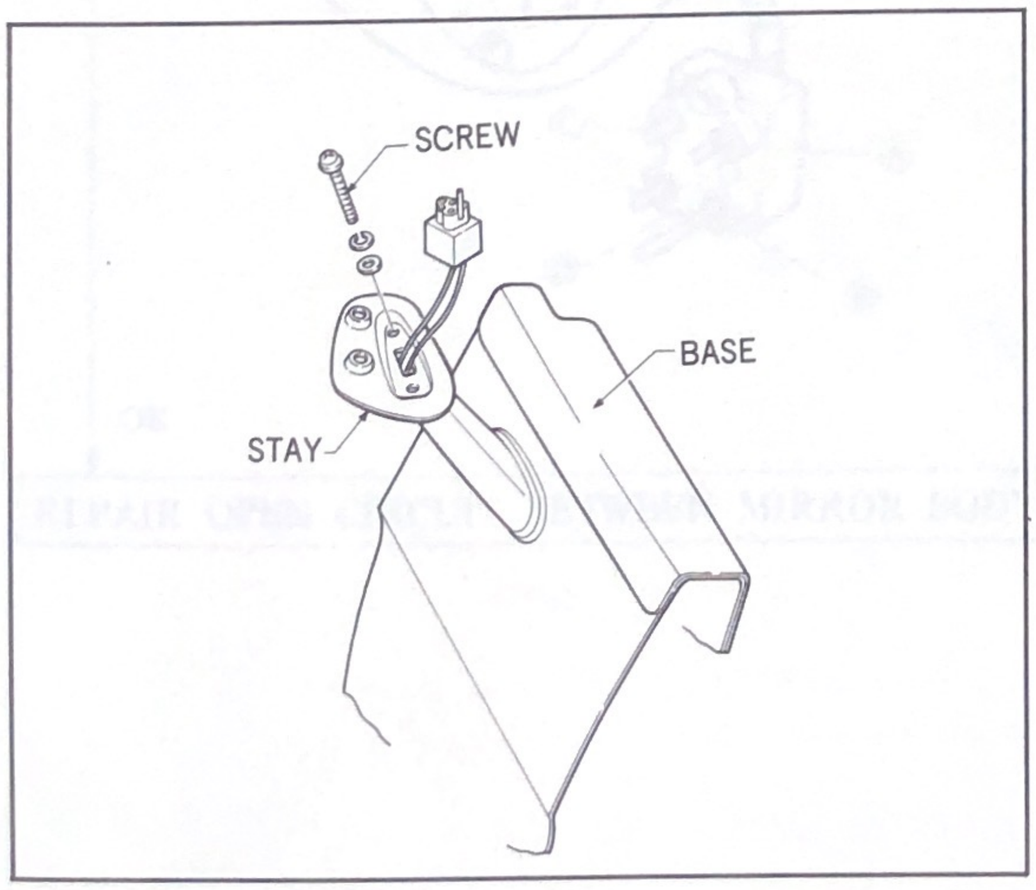

3. Get the connector through the base and the stay and attach the mirror stay to the door with the screws.

REMOTE CONTROL MIRROR

•INSTALLATION 2

INSTALLATION

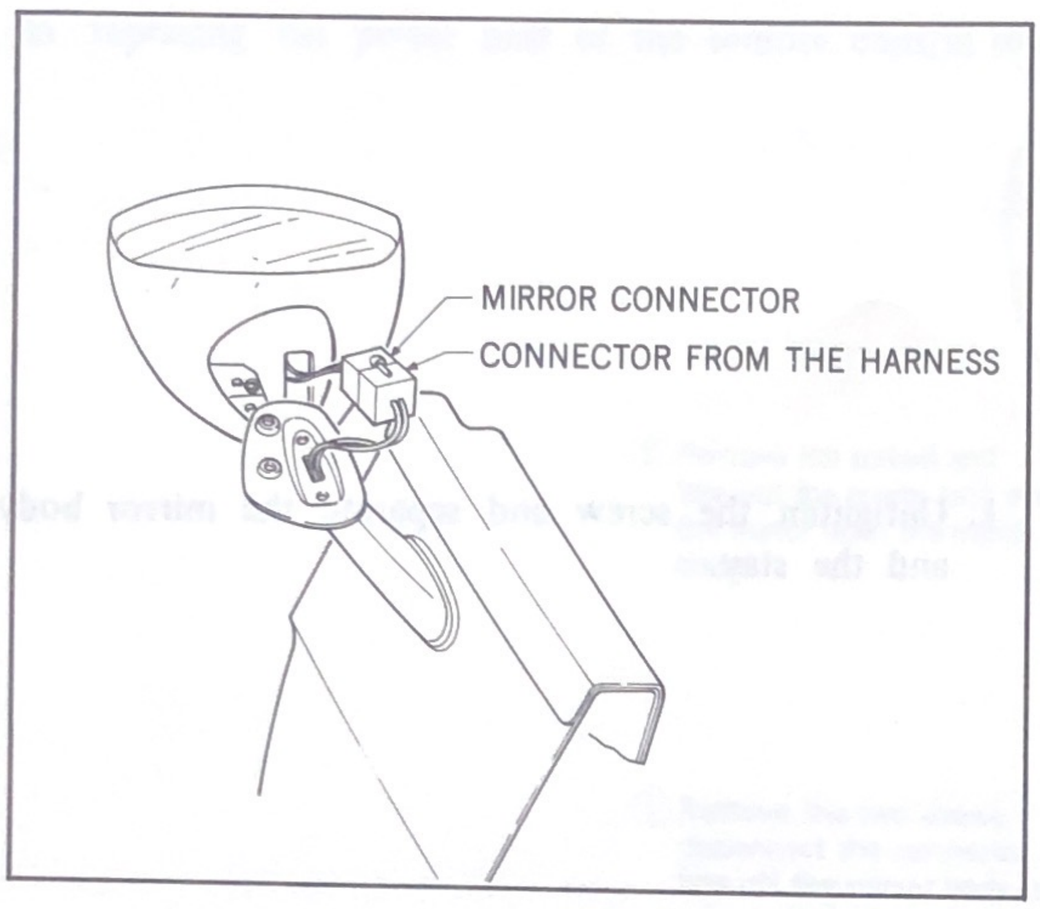

4. Connect the connectors and put the lead wire into the stay.

5. Then secure the mirror body to the stay.

6. Make sure that the mirror turns vertically and horizontally when the mirror control is manipulated.

TROUBLE SHOOTING

DOOR MIRROR INOPERATIVE.

↓

CHECK THE MIRROR CONTROL. — NG → REPAIR OR REPLACE THE MIRROR CONTROL.

Check the mirror control connector for the continuity between each terminals when the mirror control is in each operating position.

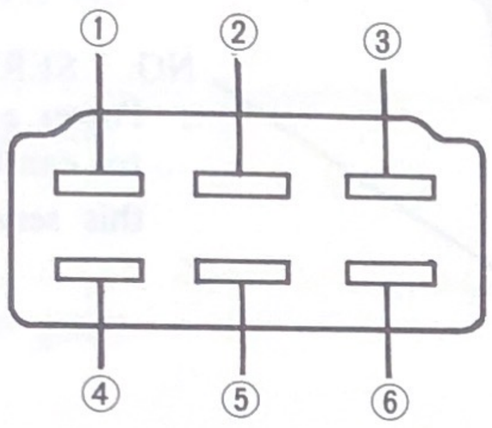

UP	③ – ⑥, ① – ③, ② – ⑤
DOWN	③ – ⑥, ② – ③, ① – ⑤
LEFT	③ – ①, ② – ⑤
RIGHT	② – ③, ⑤ – ①

OK

↓

CHECK THE MIRROR BODY. — NG → REPAIR OR REPLACE THE POWER UNIT.

Check whether the mirror moves in each direction when the voltage is applied to the terminals of mirror body connector.

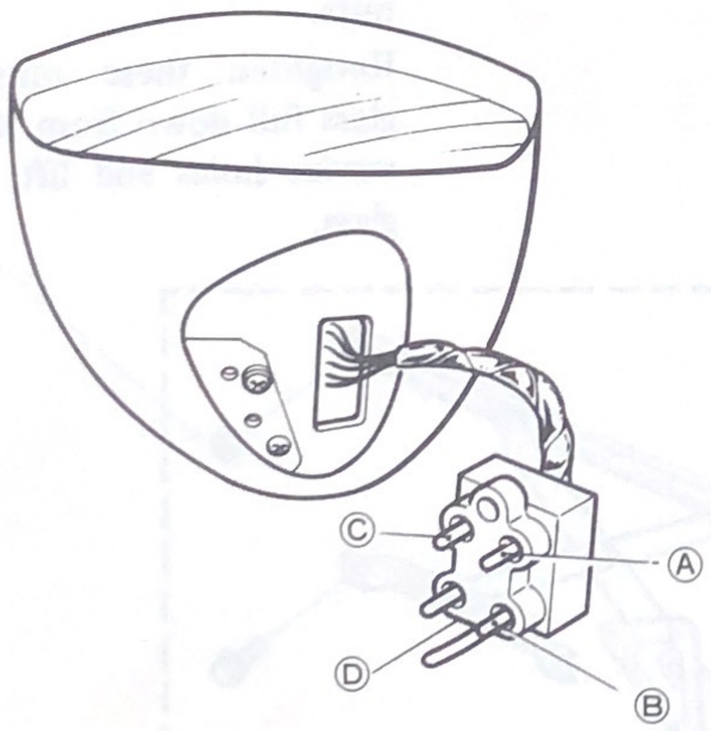

UP	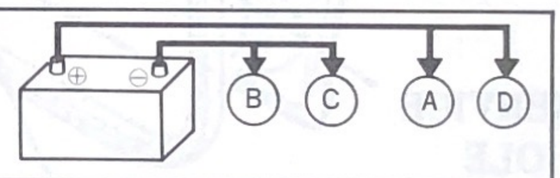
DOWN	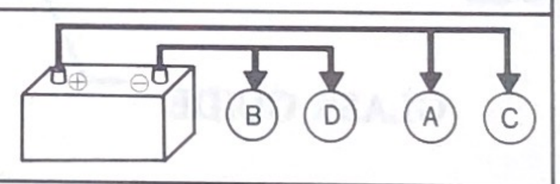
LEFT	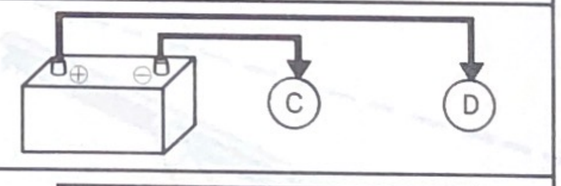
RIGHT	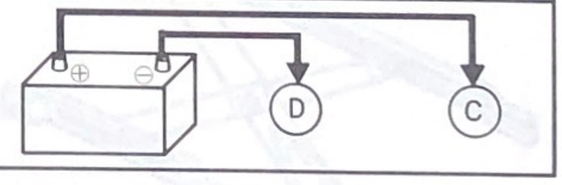

OK

↓

REPAIR OPEN CIRCUIT BETWEEN MIRROR BODY AND CONTROL.

FRONT DOOR WINDOW

•CONSTRUCTION •SERVICE SUMMARY

GUIDE BRACKET
is secured to the glass by the bolts.
The adjusting is difficult so never loosen or remove the securing bolts in the service. Wrong adjustment causes the bad sealing between the glass and weather strip.

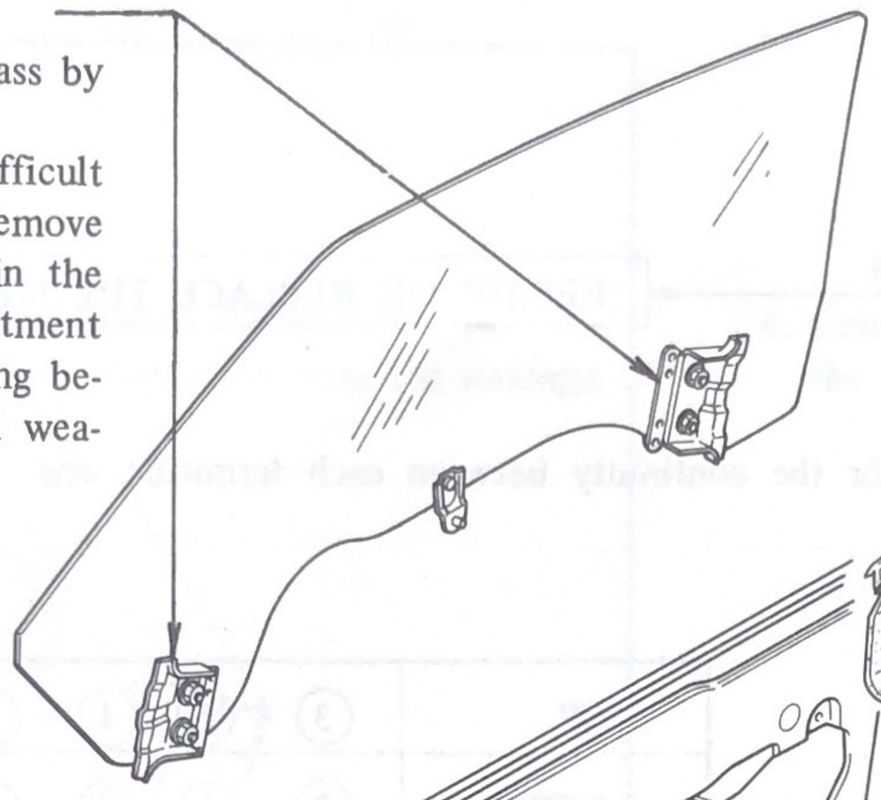

GLASS
- Thickness 6 mm (0.24 in)

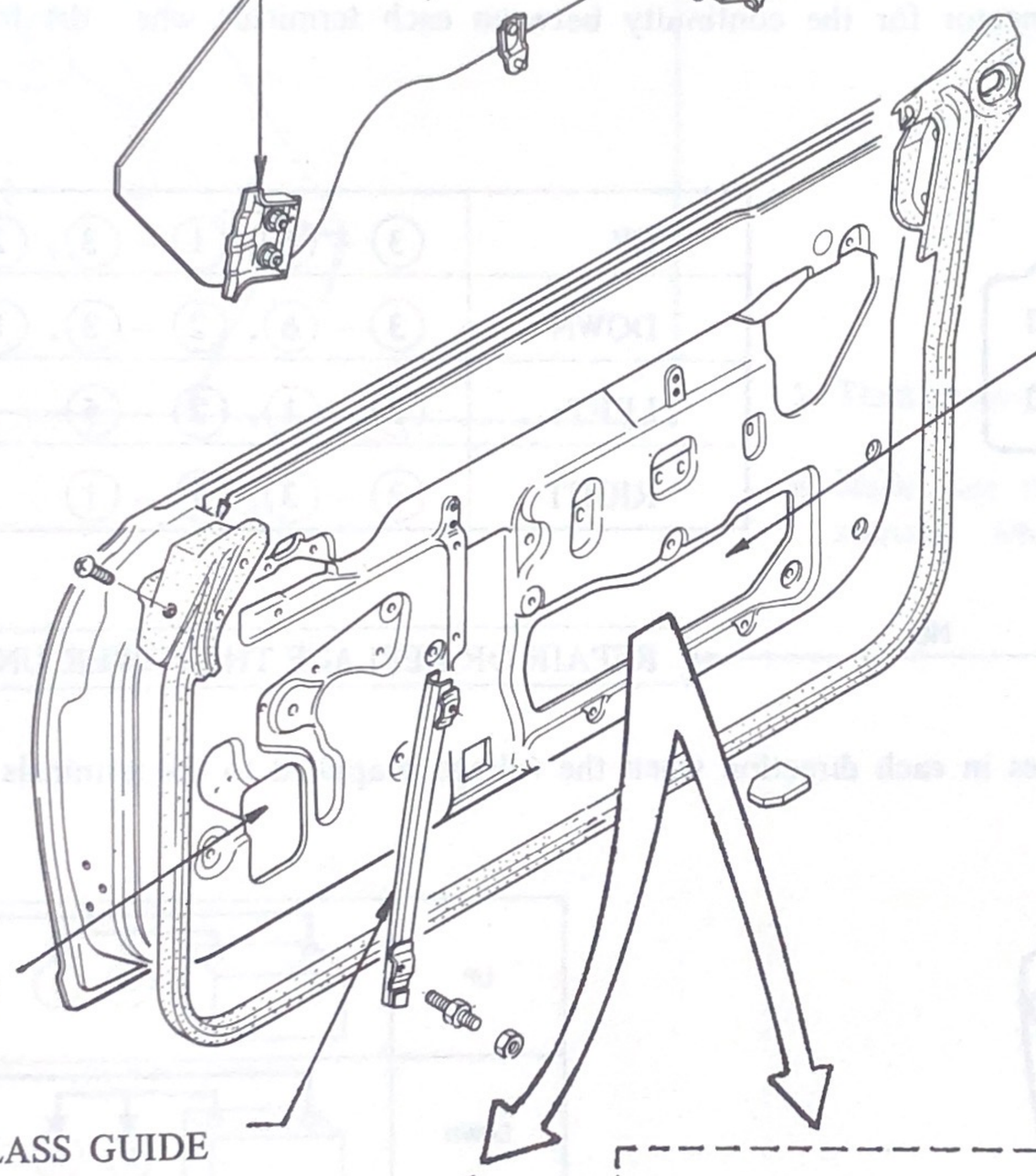

NO. 1 SERVICE HOLE
. Power and manual regulator can be pulled out from this service hole.

The glass is attached to regulator guide No. 1 with three nuts.
Retighten these nuts with glass full down from No. 1, 2 service holes and lift up the glass.

NO. 2 SERVICE HOLE

GLASS GUIDE

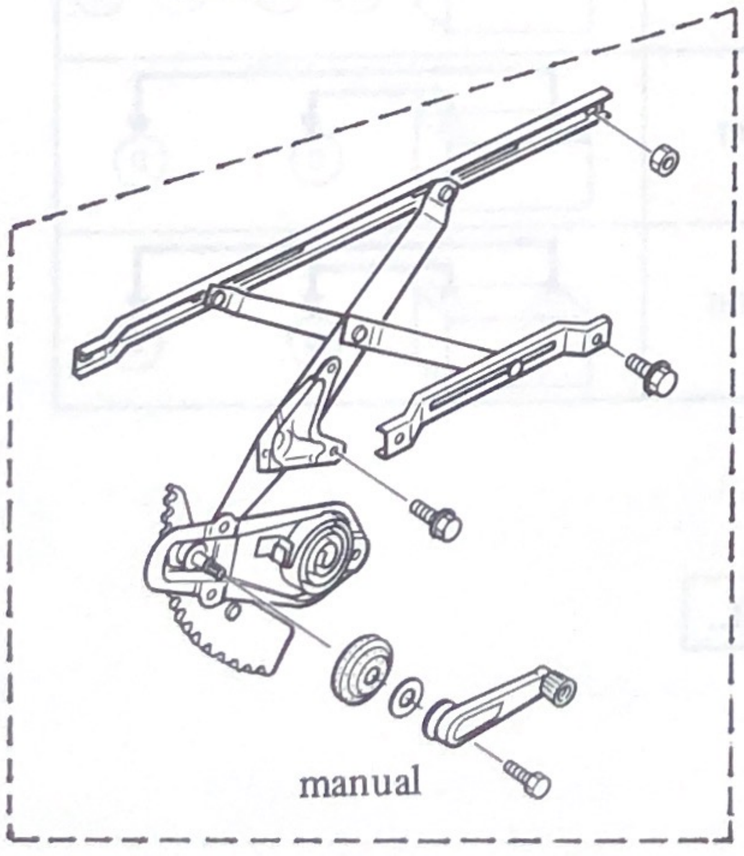
manual

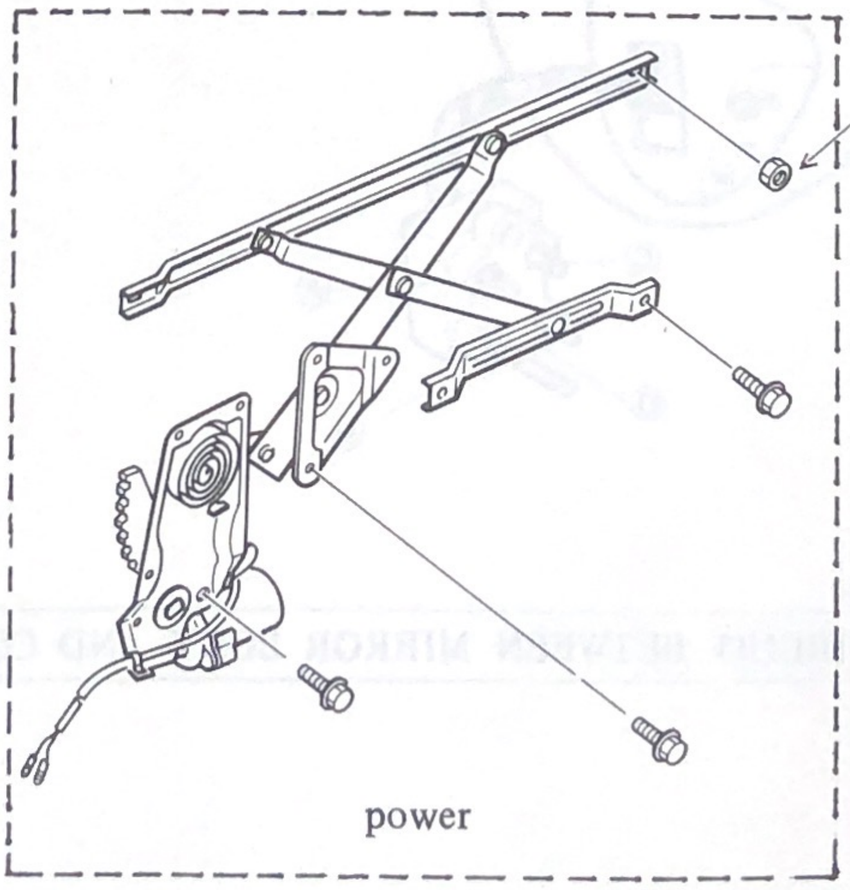
power

. Regulator is of X arm type which is simple to adjust.

FRONT DOOR WINDOW

•ADJUSTMENT 1

ADJUSTMENT

- The position of the glass should be adjusted with special care because this is the sashless type.
- Wrong adjustment causes the following troubles.

Part of wrong adjustment	Trouble
Upper stopper	. Wind noise . Water leakage . Weatherstrip lip is nipped
In and out	. Wind noise . Water leakage
Horizontal	. Door glass does not close completely. . Water leakage . Wind noise
Glass guide	. Noise while closing the door . Noise while running on the rough road . Regulator operates badly.

FRONT DOOR WINDOW

•ADJUSTMENT

ADJUSTMENT

- Adjustments of manual and power windows are the same.

UPPER STOP – Locate the glass so that the clearance between the body and upper side of the glass becomes 11.5 ± 1.5 mm and tighten the stopper attaching screw.
Because if the stopper turns while securing, the clearance change, special care is required.

HORIZONTAL – Raise the window to full up position and make the horizontal adjustment of the glass by moving regulator guide up and down and tighten it.
Make sure that the regulator guide is parallel with the standard line.

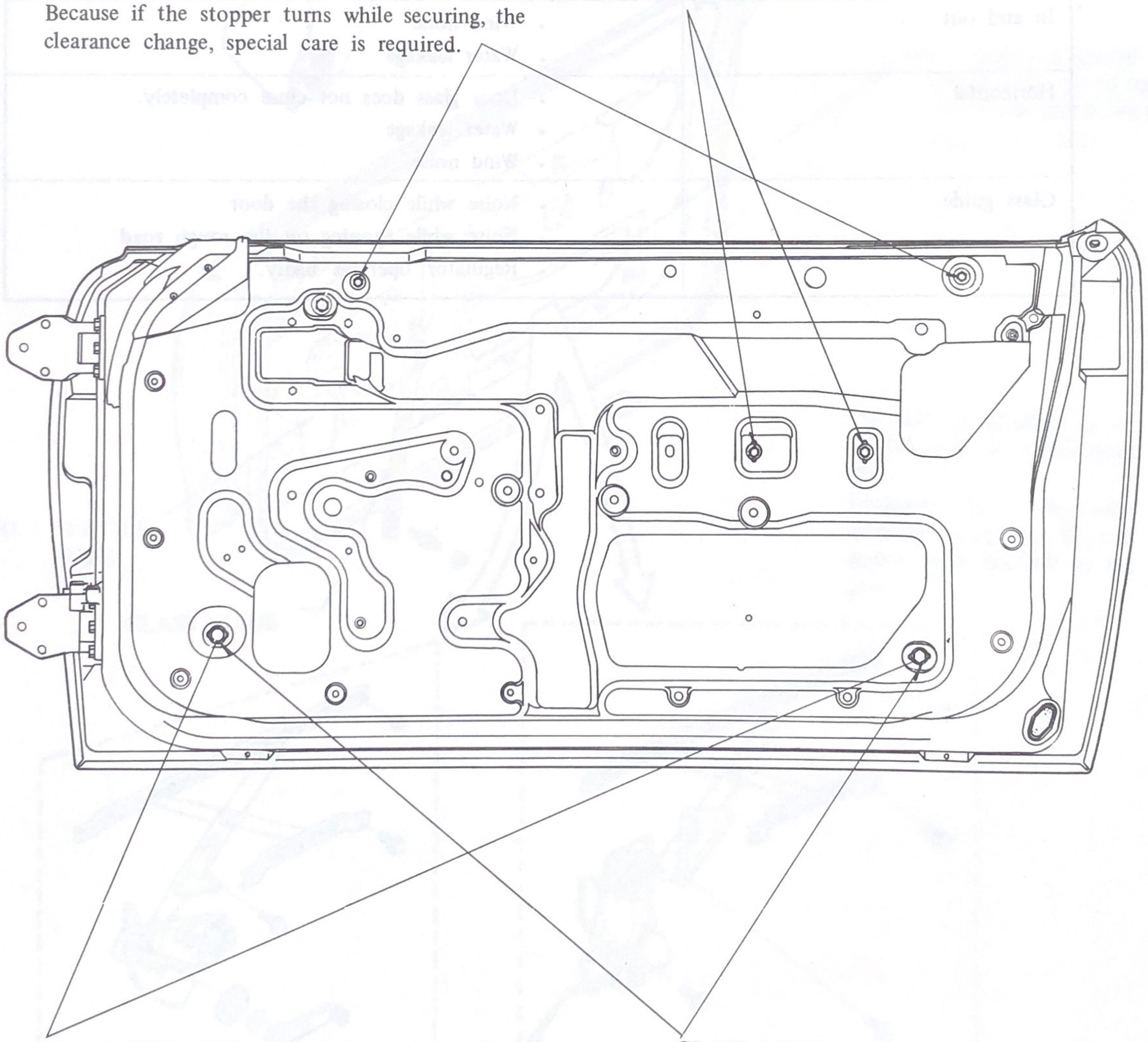

IN and OUT – With the window raised adjust the glass guide lower adjusting bolts so that glass circumference touches cabside weatherstrip evenly.

GLASS GUIDE – After completing the above adjustment, move the glass guide fore and aft so that the guide block touches it softly.

ELECTRICAL

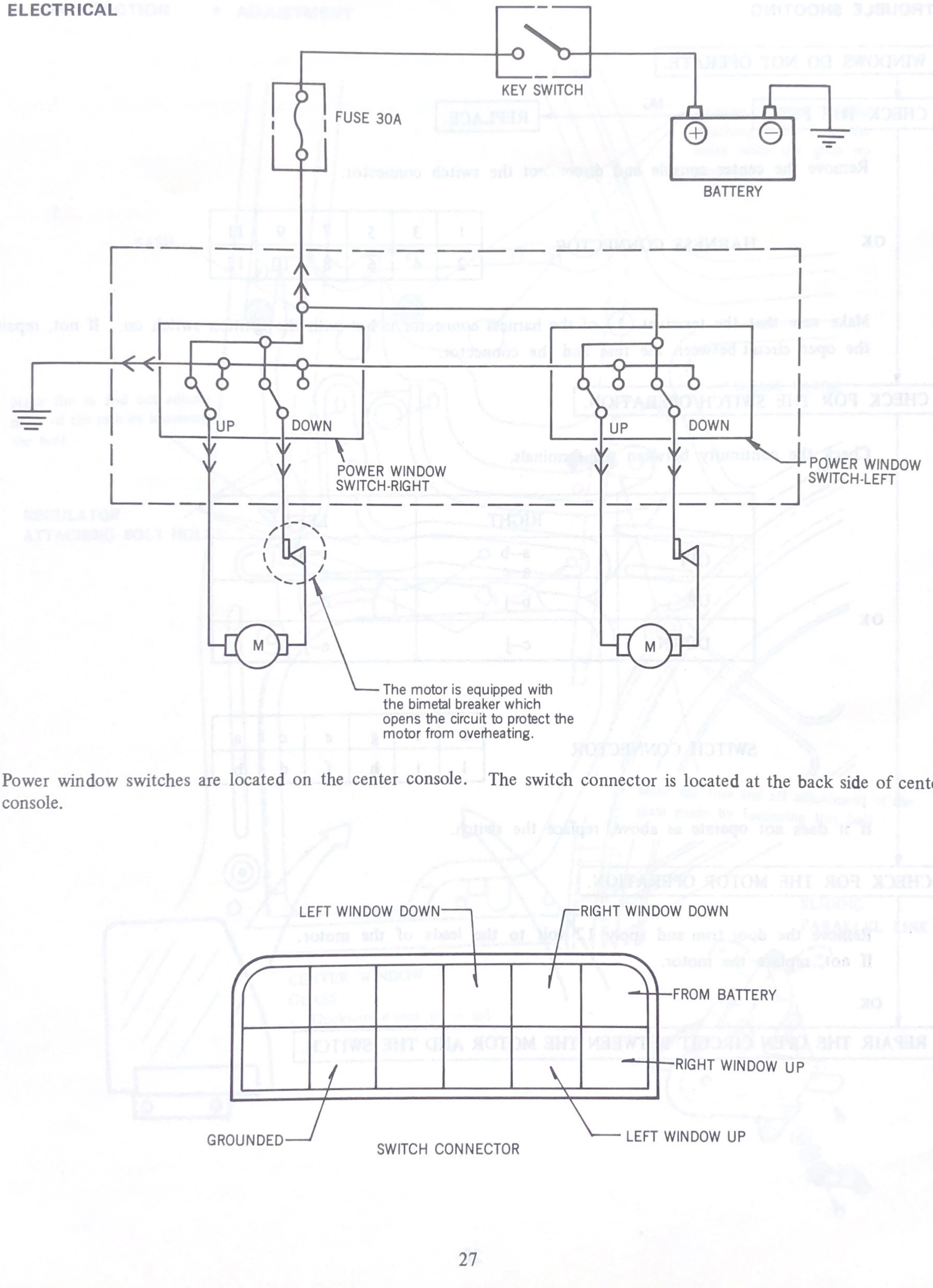

Power window switches are located on the center console. The switch connector is located at the back side of center console.

TROUBLE SHOOTING

WINDOWS DO NOT OPERATE.

↓

CHECK THE FUSE. —NG→ REPLACE.

↓

Remove the center console and disconnect the switch connector.

OK

HARNESS CONNECTOR

1	3	5	7	9	11
2	4	6	8	10	12

Make sure that the terminal (1) of the harness connector is hot with the ignition switch on. If not, repair the open circuit between the fuse and the connector.

↓

CHECK FOR THE SWITCH OPERATION.

↓

Check the continuity between the terminals.

	RIGHT	LEFT
OFF	a–b a–c	a–d a–e
UP	b–j	d–j
DOWN	c–j	e–j

OK

SWITCH CONNECTOR

k	i	g	e	c	a
l	j	h	f	d	b

If it does not operate as above, replace the switch.

↓

CHECK FOR THE MOTOR OPERATION.

↓

Remove the door trim and apply 12 volt to the leads of the motor.
If not, replace the motor.

OK

↓

REPAIR THE OPEN CIRCUIT BETWEEN THE MOTOR AND THE SWITCH.

CENTER WINDOW

•CONSTRUCTION •ADJUSTMENT

• CONSTRUCTION • ADJUSTMENT

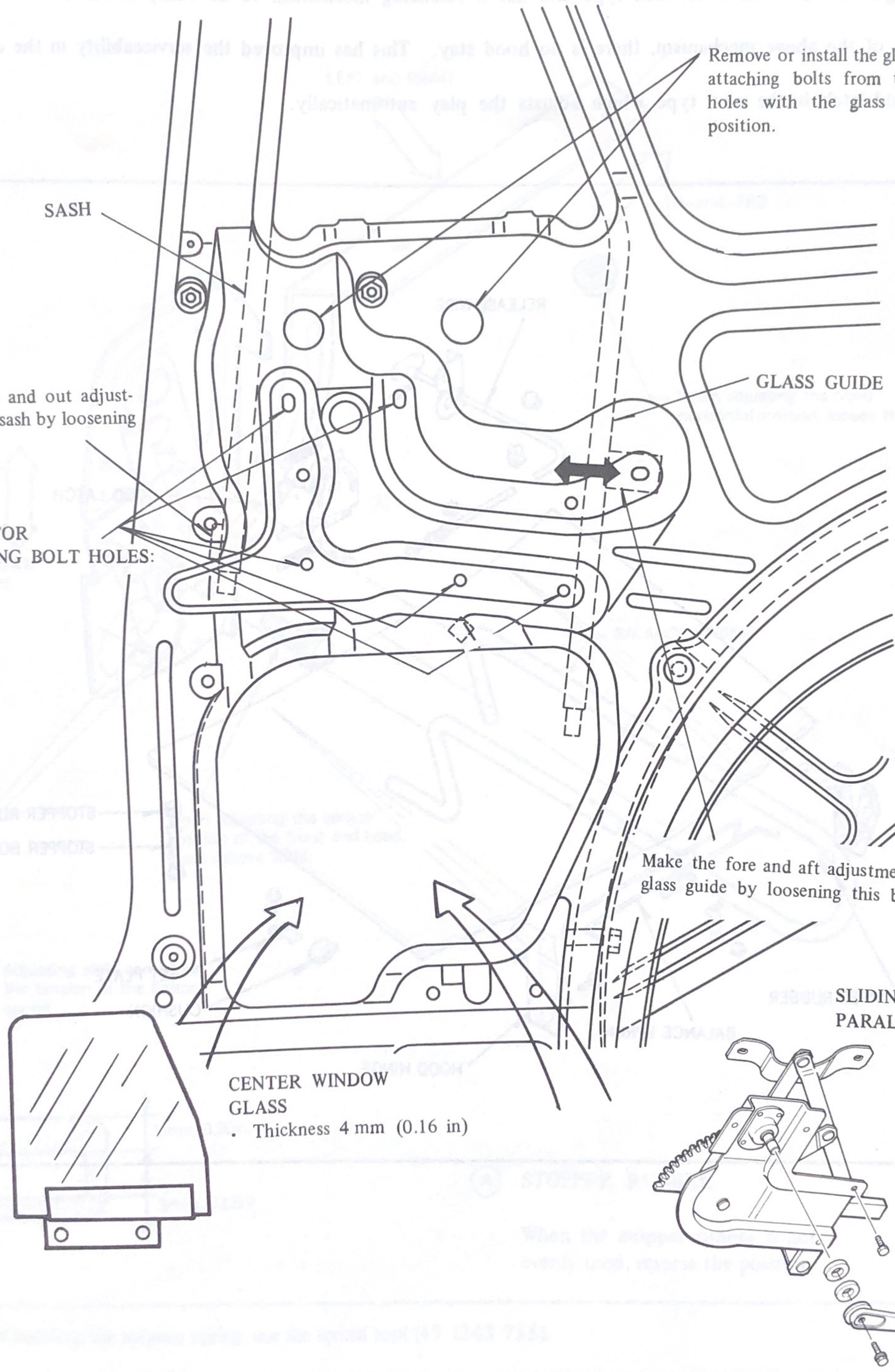

ENGINE HOOD

DESCRIPTION

- The engine hood is the swan-neck type and has a balancing mechanism to be easily handled.
- Because of the above mechanism, there is no hood stay. This has improved the serviceability in the compartment.
- The hood latch is the new type which adjusts the play automatically.

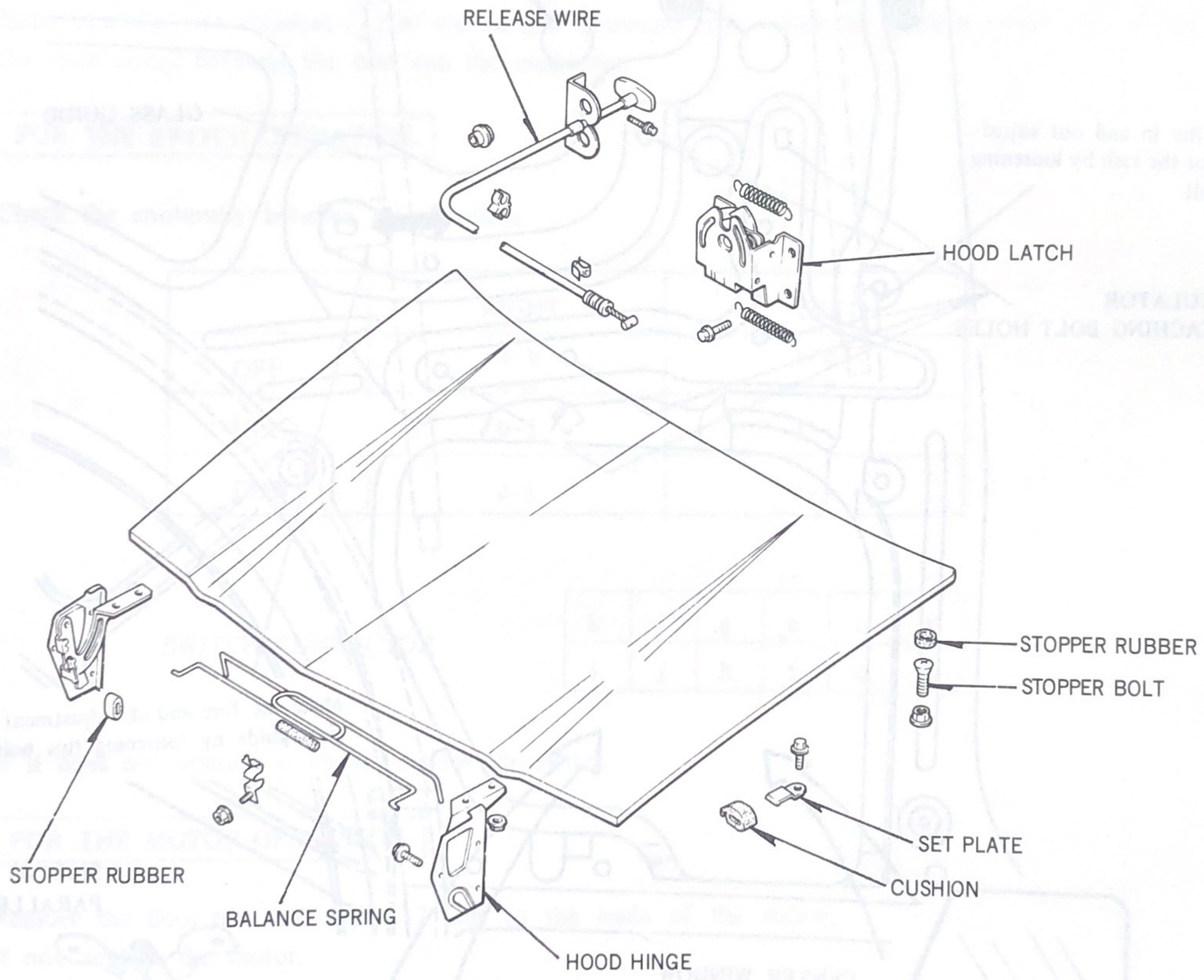

ADJUSTMENT

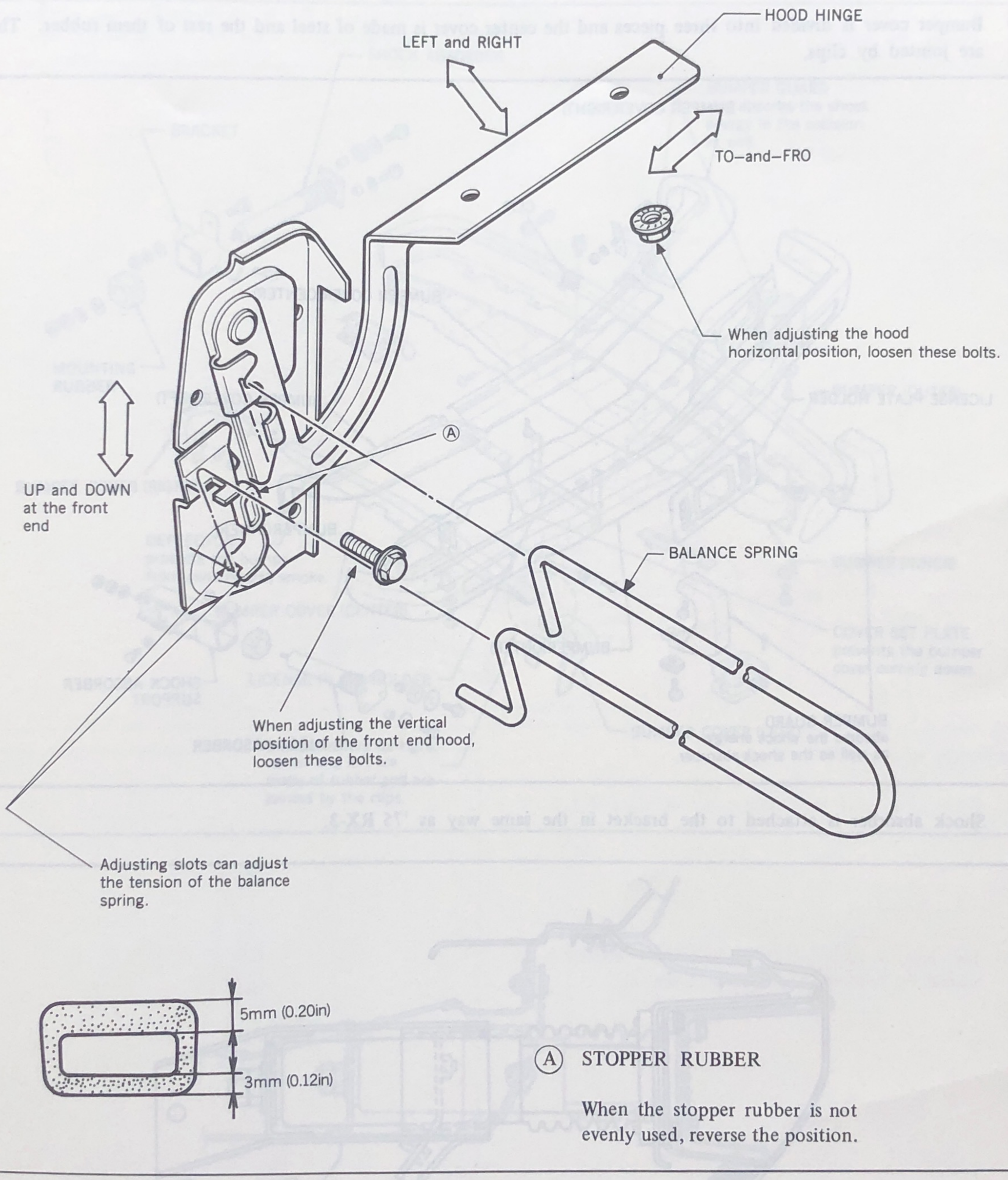

Ⓐ STOPPER RUBBER

When the stopper rubber is not evenly used, reverse the position.

NOTE : When installing the balance spring, use the special tool (49 1243 755).

DESCRIPTION

- Bumper stroke is 40 mm in collision.
- Bumper cover is divided into three pieces and the center cover is made of steel and the rest of them rubber. They are jointed by clips.

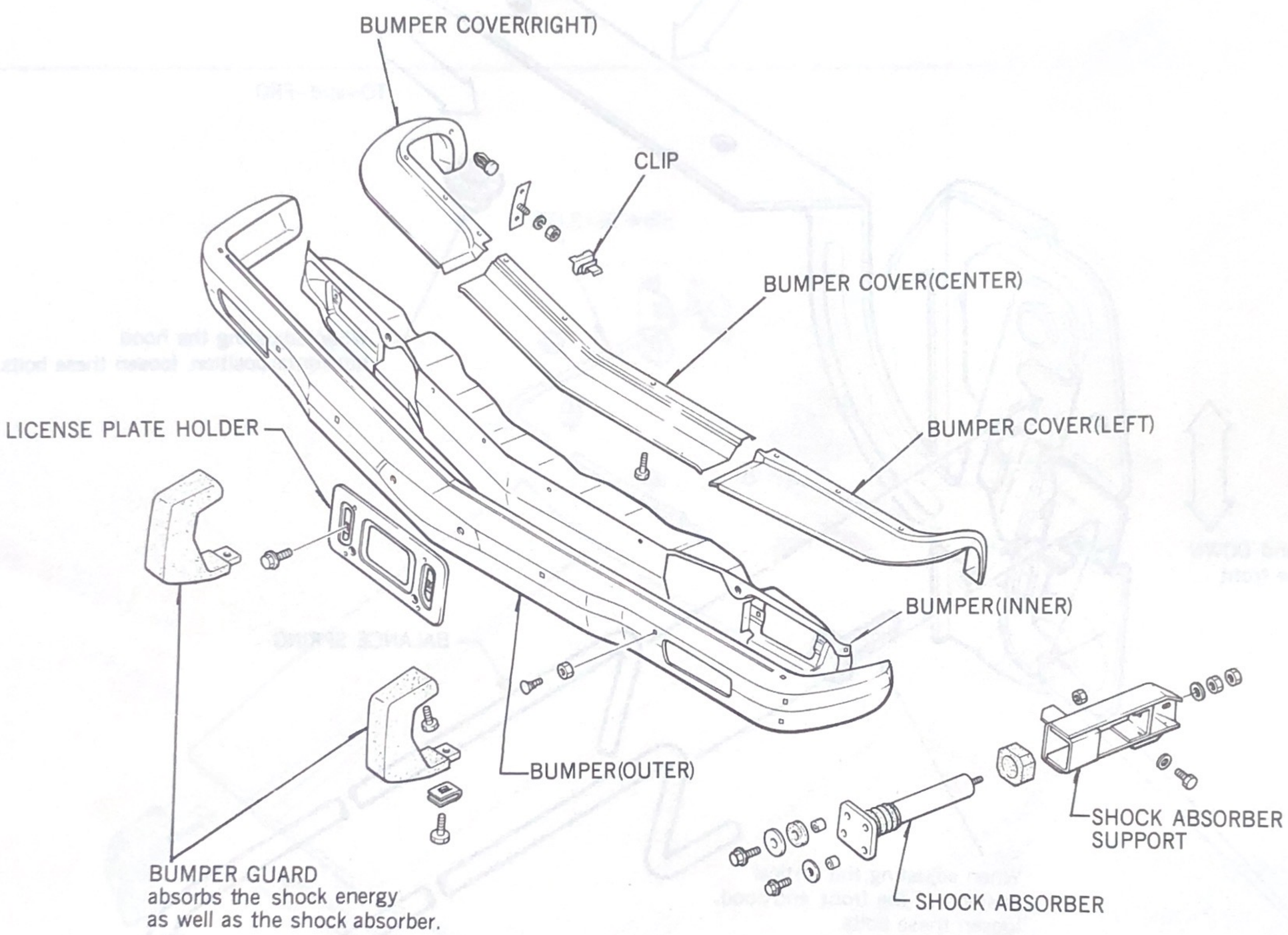

- Shock absorber is attached to the bracket in the same way as '75 RX-3.

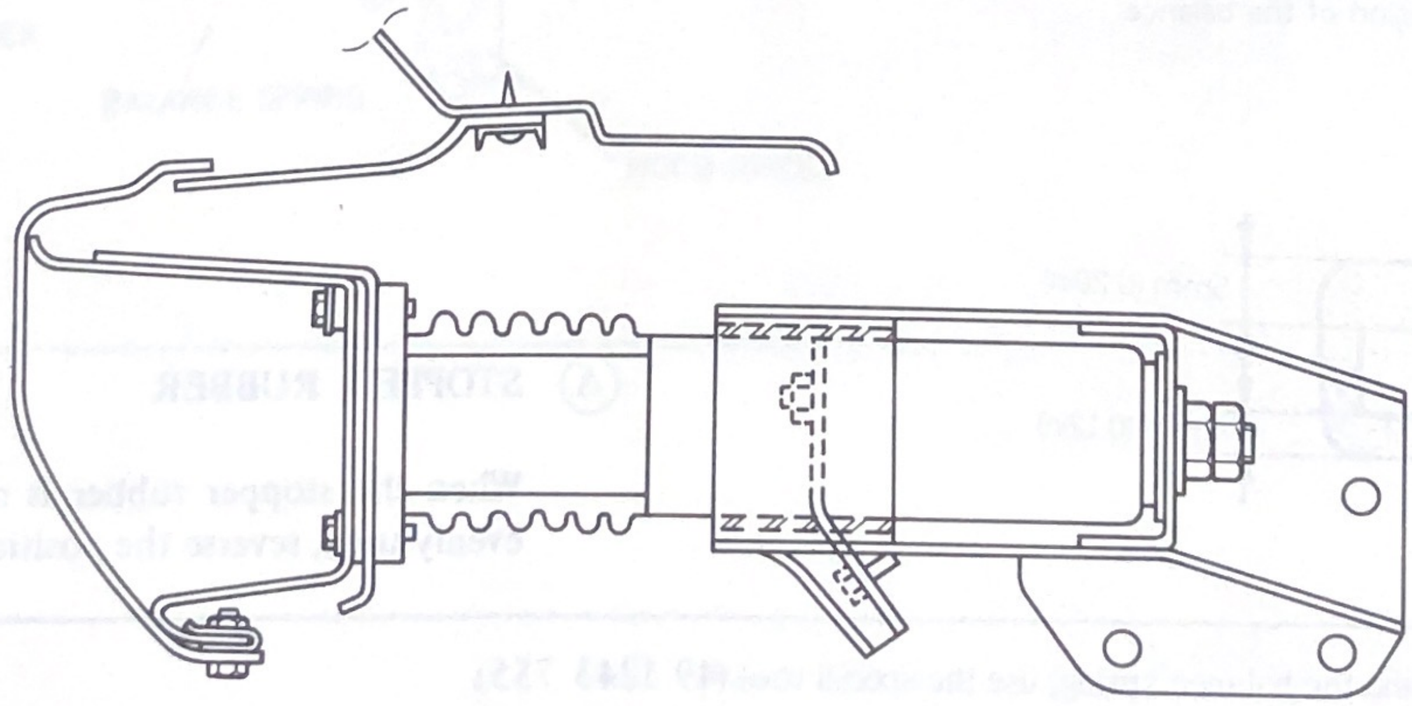

REAR BUMPER

DESCRIPTION

- Bumper stroke is 50 mm in collision.

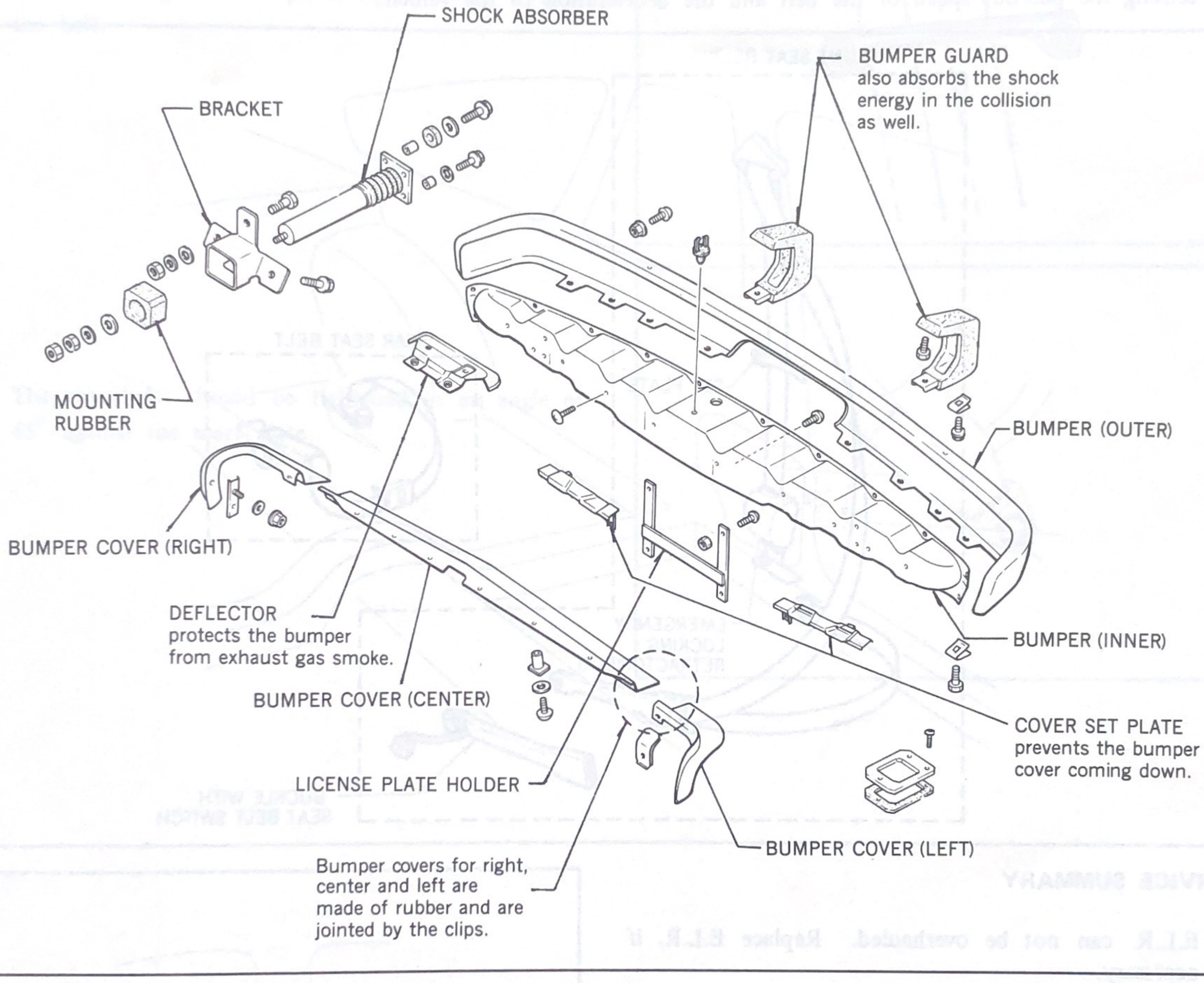

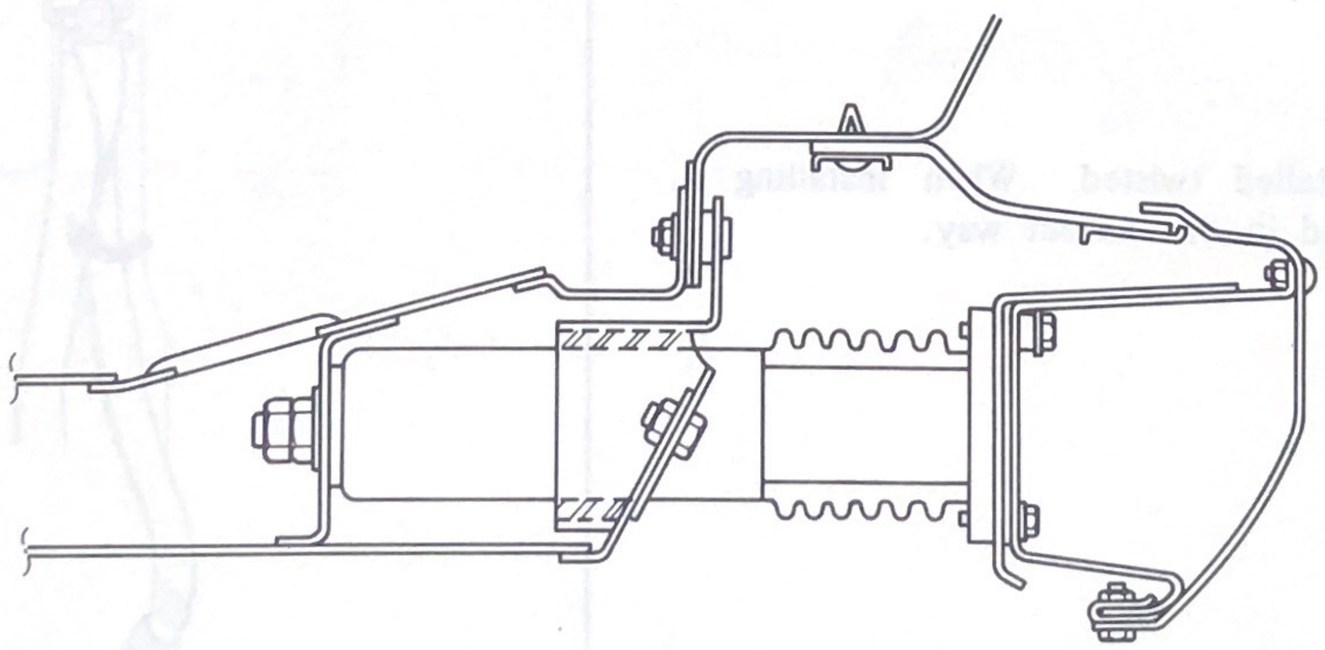

SEAT BELT

•DESCRIPTION •SERVICE SUMMARY

DESCRIPTION

- One emergency locking retractor is equipped per each seat belt. '75 RX-4 has two emergercy locking retractors.
- In the ordinary operation, the belt is freely pulled out. In the emergency E.L.R. mechanically locks the belt by sensing the pull-out speed of the belt and the deceleration of the vehicle.

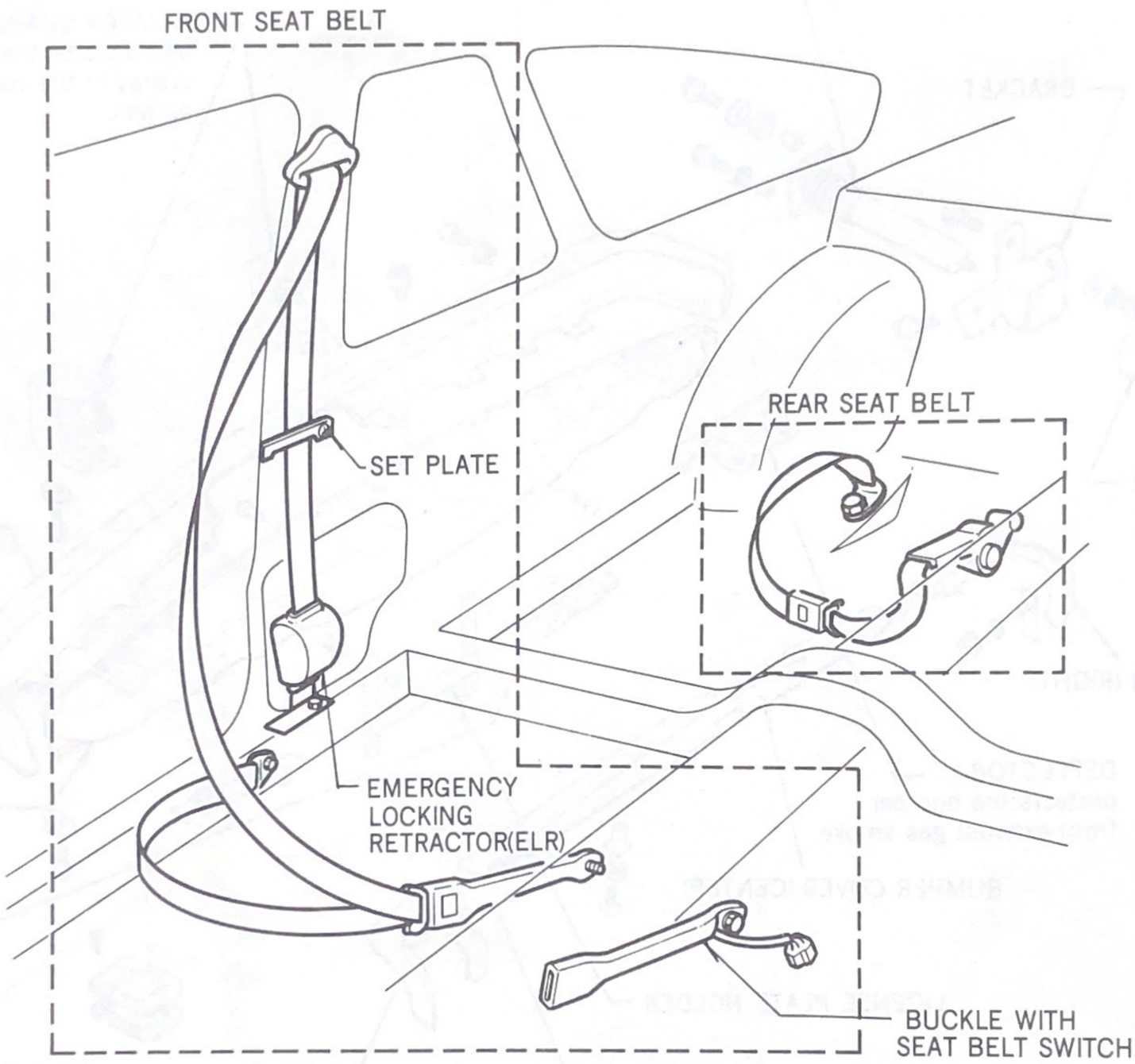

SERVICE SUMMARY

- E.L.R. can not be overhauled. Replace E.L.R. if necessary.
- The belt is installed twisted. When installing it, should be twisted in the correct way.

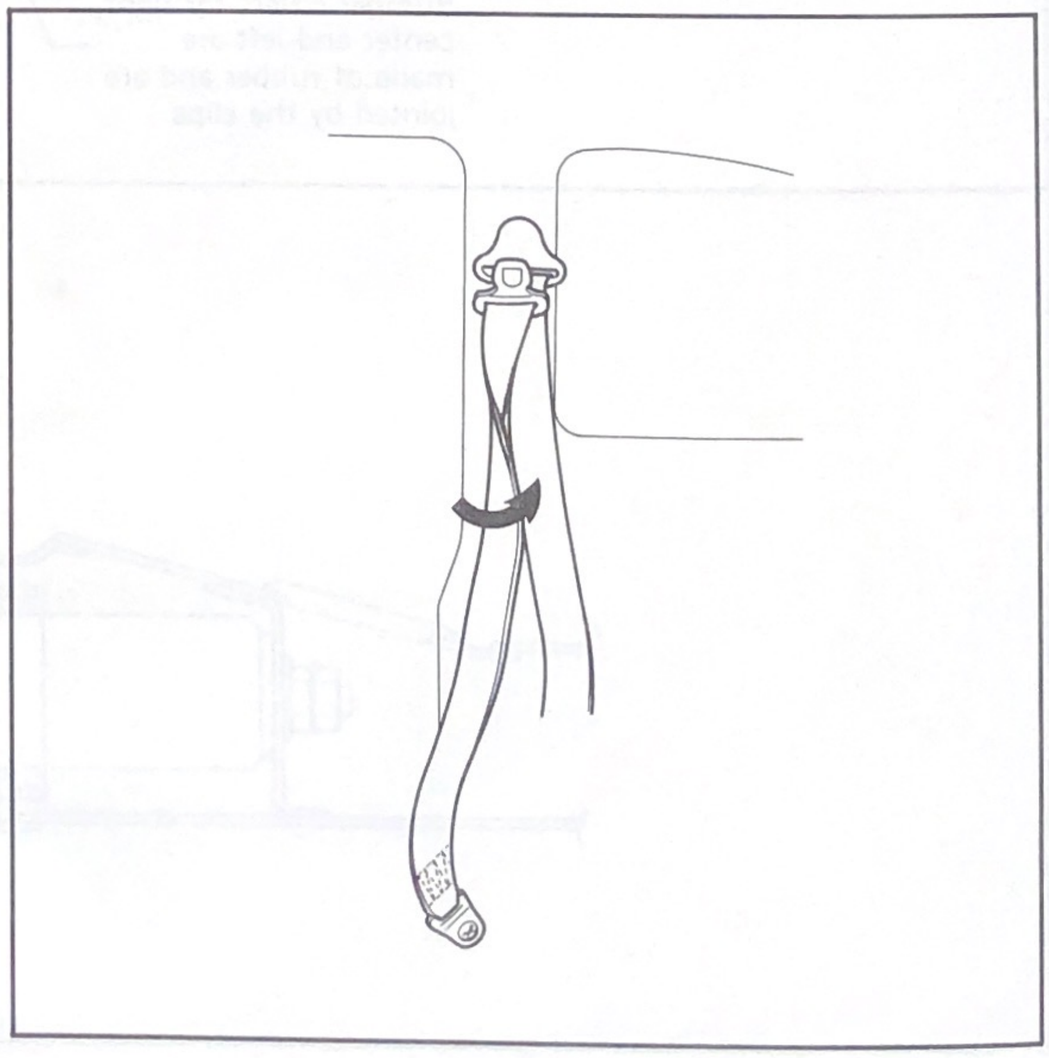

SEAT BELT

•SERVICE SUMMARY

SERVICE SUMMARY

- When securing the set plate, never secure it with the belt.

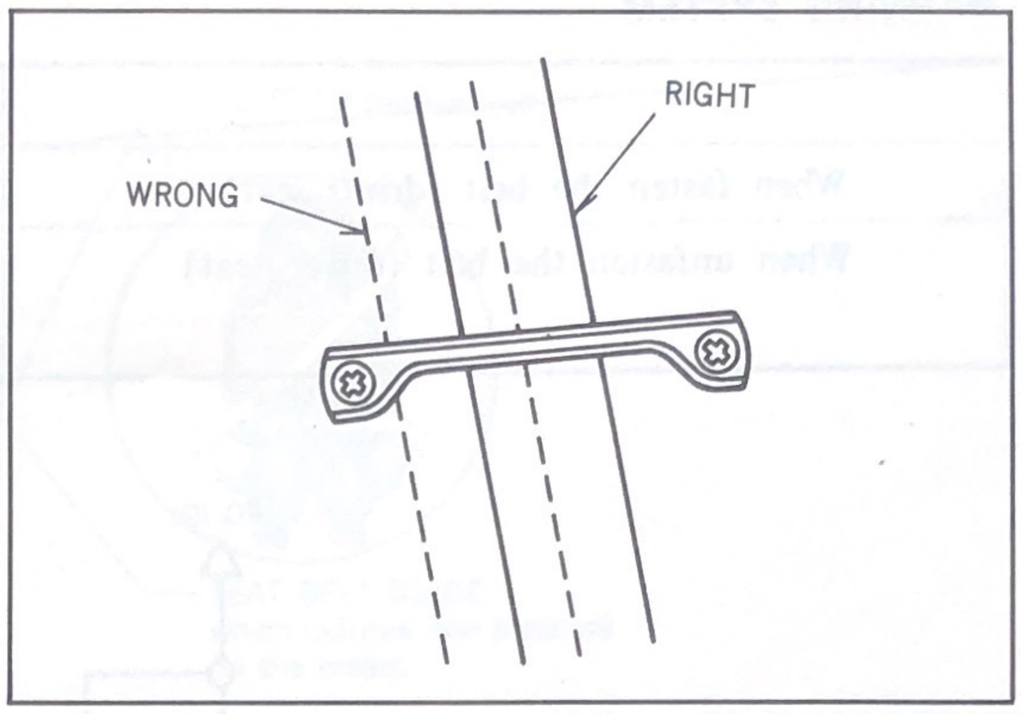

- The seat belts should be tightened in an angle of 45° against the scarf plate.

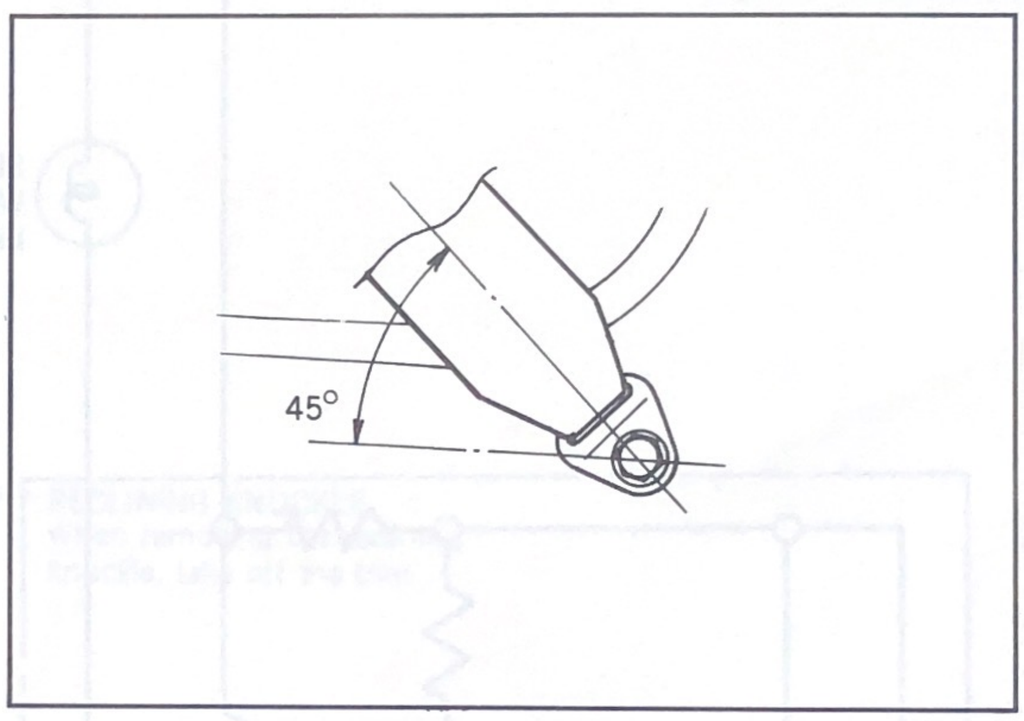

SEAT BELT

•WARNING SYSTEM

WARNING SYSTEM

	When key switch is turned to Ig. position
When fasten the belt (driver seat)	Warning light ON (4 ~ 8 sec.)
When unfasten the belt (driver seat)	Warning light ON (4 ~ 8 sec.) Buzzer alarms. (4 ~ 8 sec.)

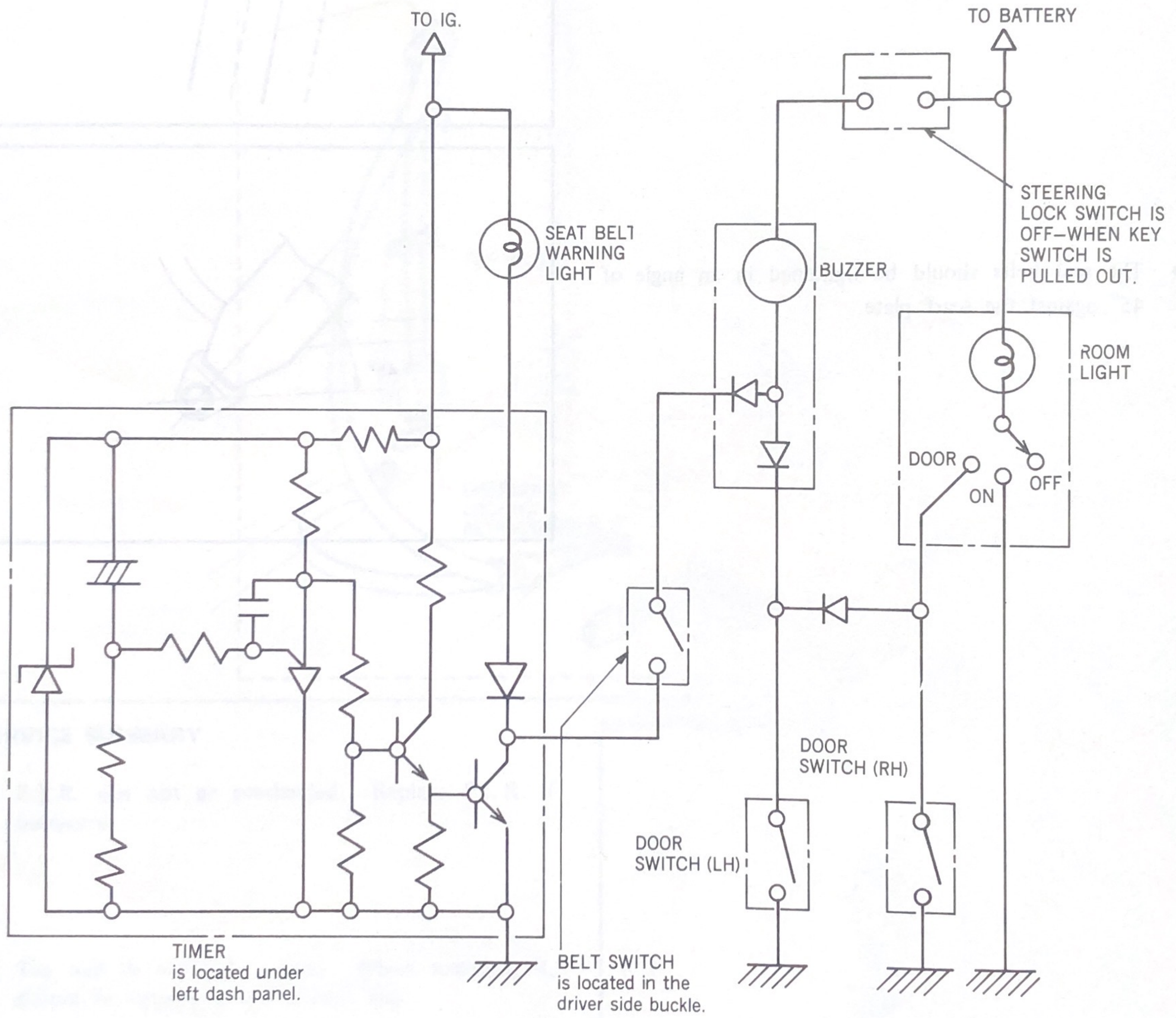

SEAT

•DESCRIPTION

DESCRIPTION

FRONT SEAT

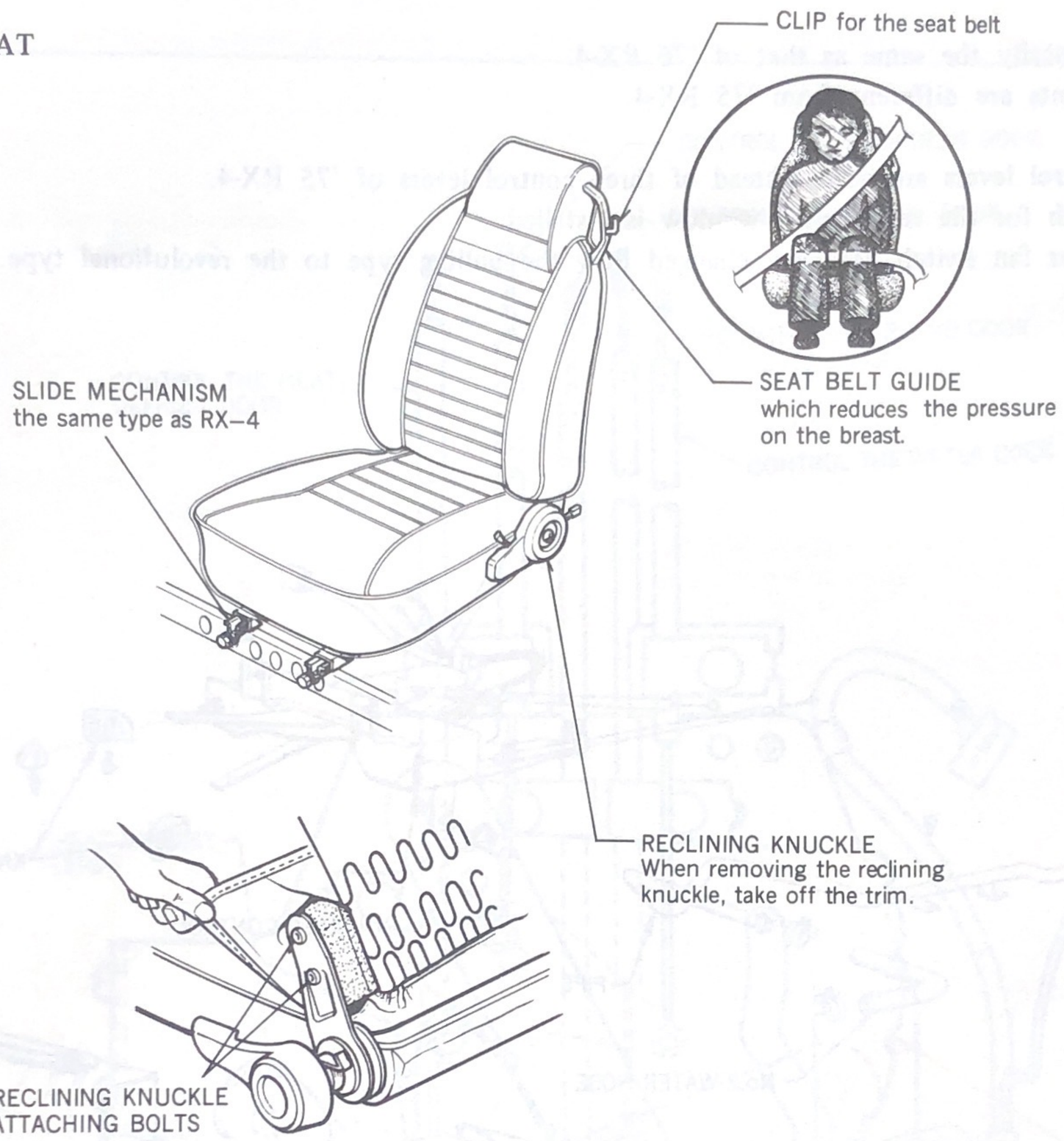

REAR SEAT

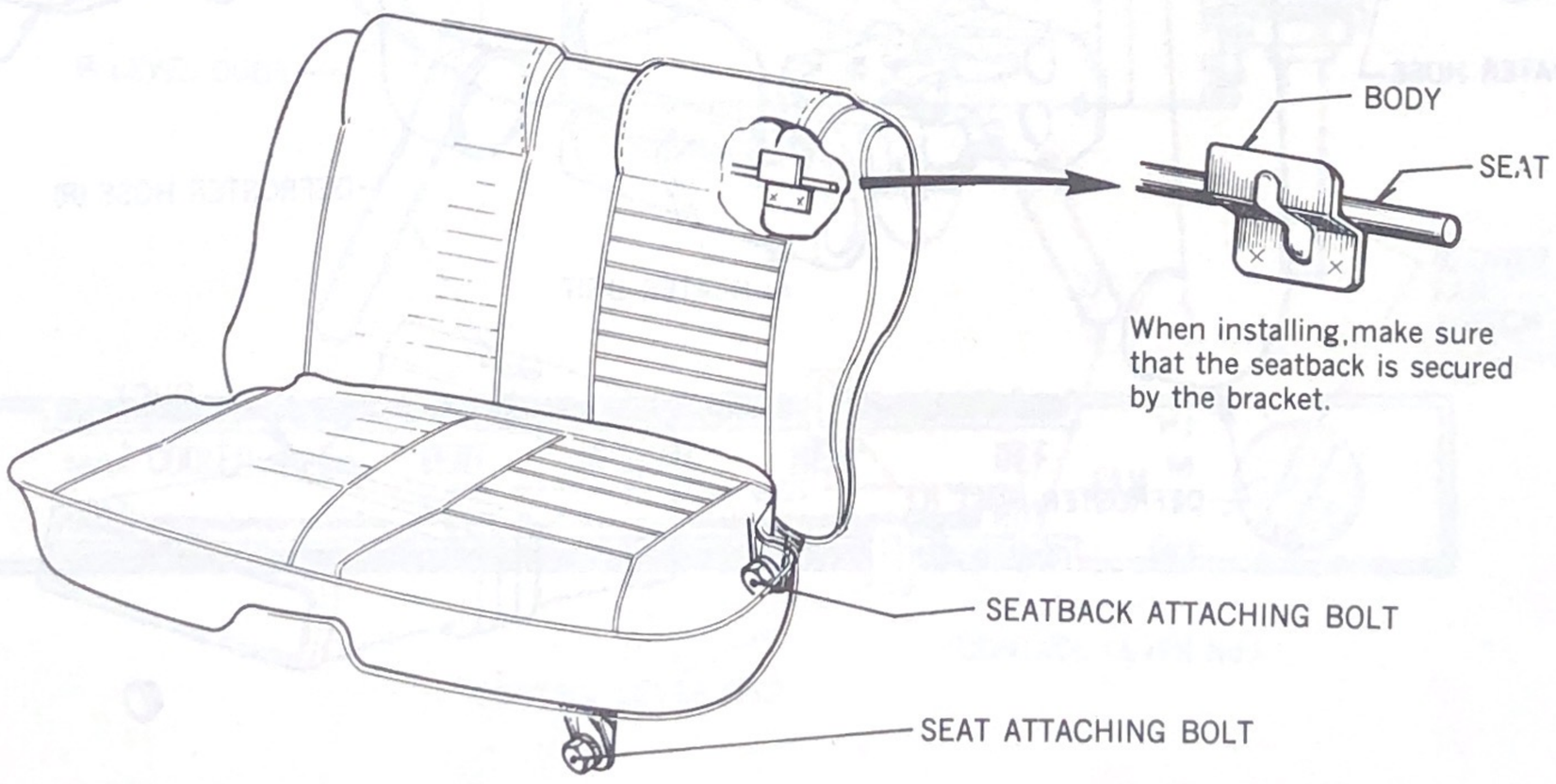

HEATER

•DESCRIPTION •CONSTRUCTION

CONSTRUCTION

- The system is basically the same as that of '76 RX-4.
- The following points are different from '75 RX-4.

  - Two control levers are used instead of three control levers of '75 RX-4.
  - The switch for the rear heated window is installed.
  - The flower fan switch has been changed flow the pulling type to the revolutional type.

CONSTRUCTION

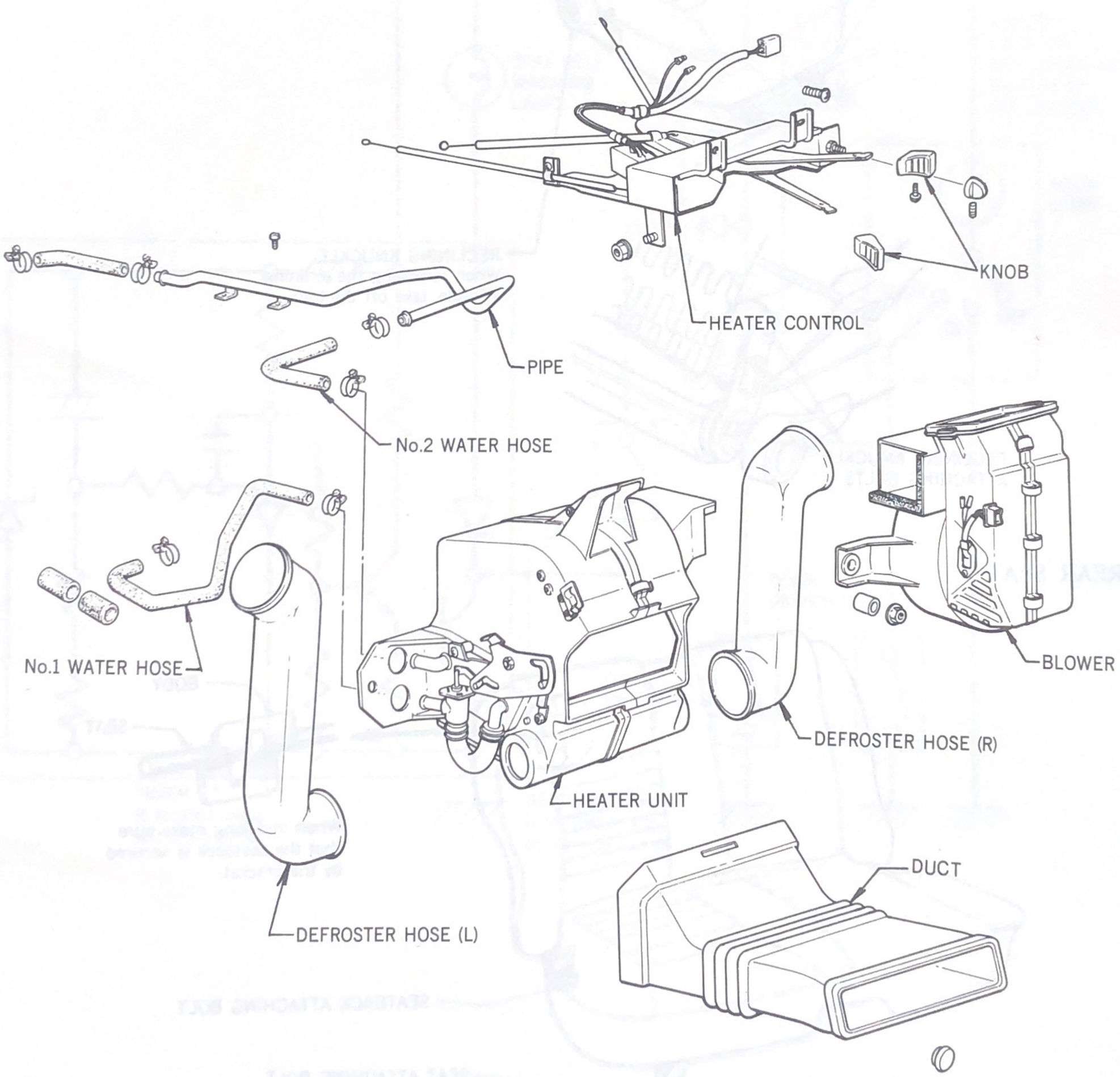

HEATER

•OPERATION

OPERATION

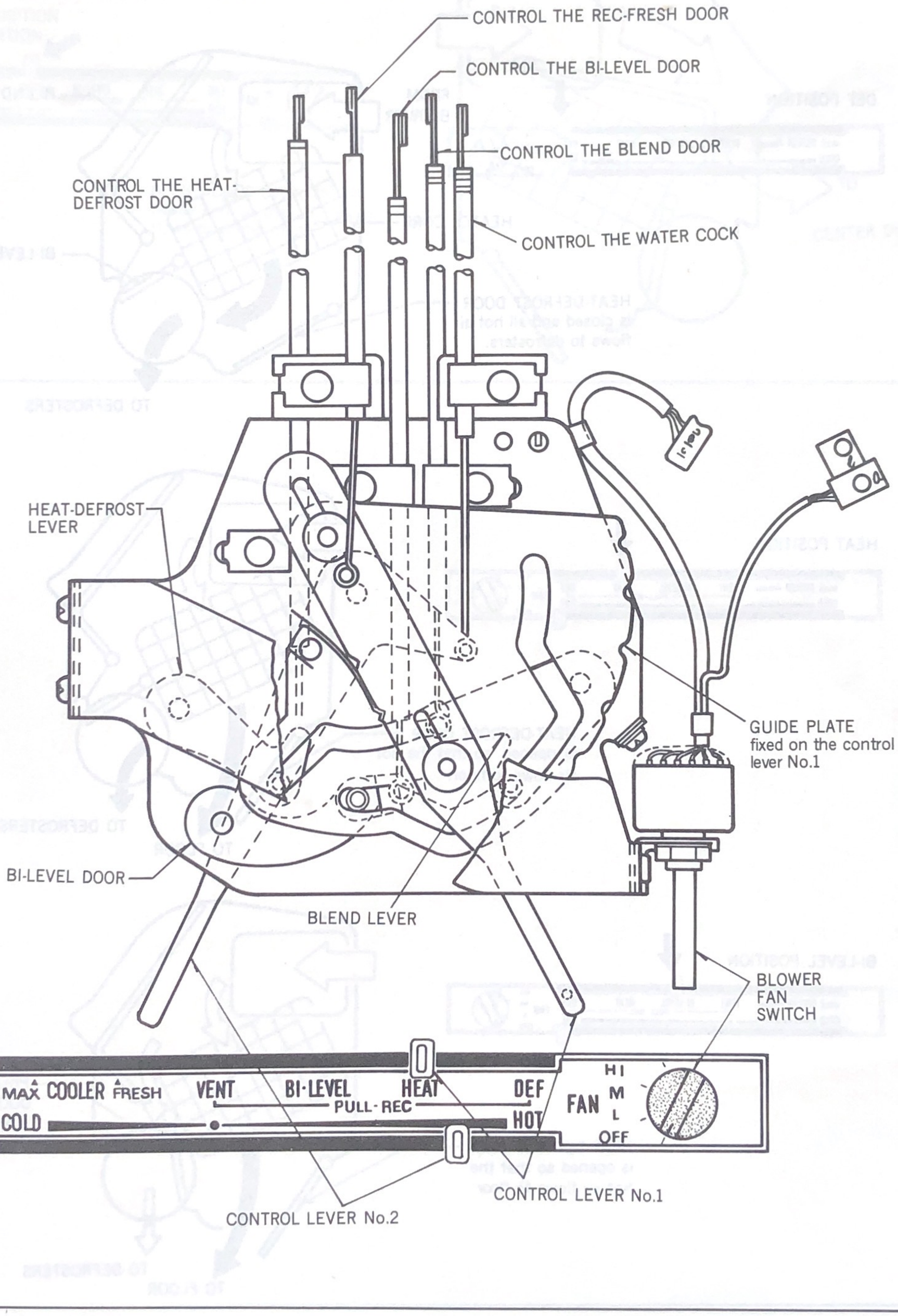

OPERATION

With the fan switch on and the lower lever at HOT, the air flow changes with the upper lever as follows.

DEF POSITION

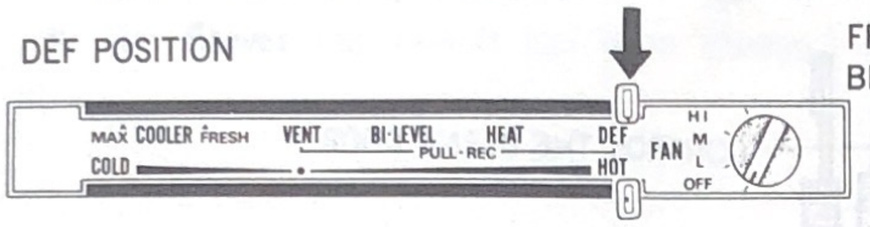

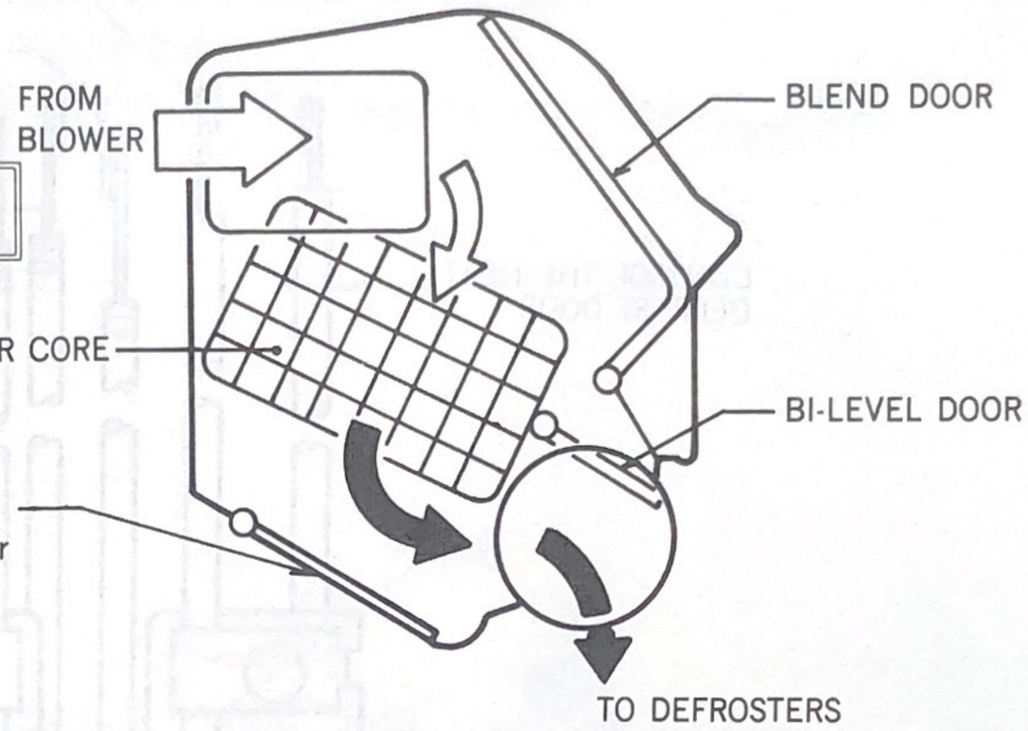

HEAT POSITION

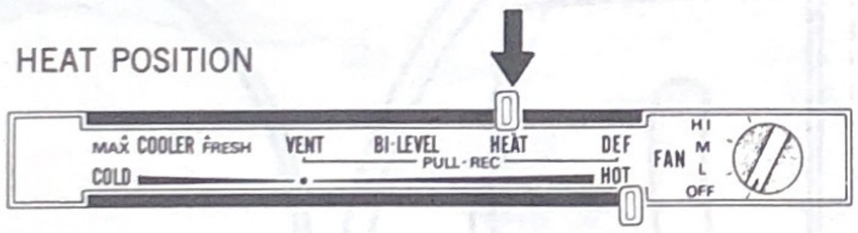

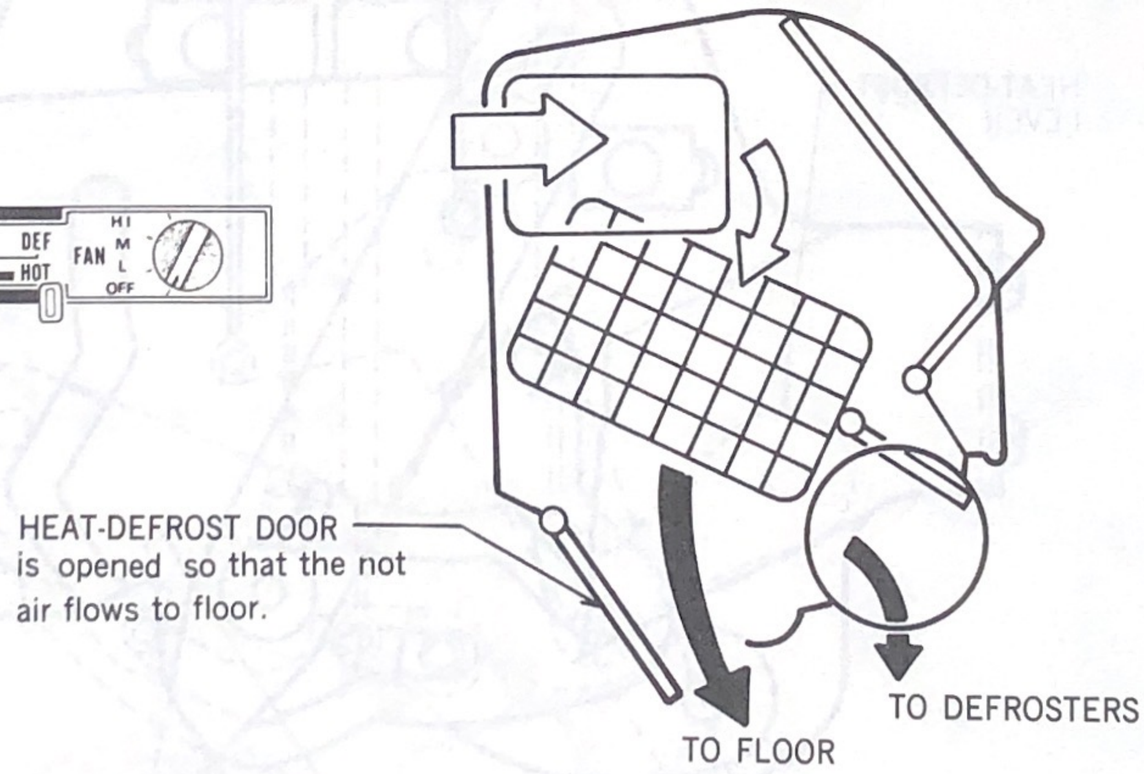

BI-LEVEL POSITION

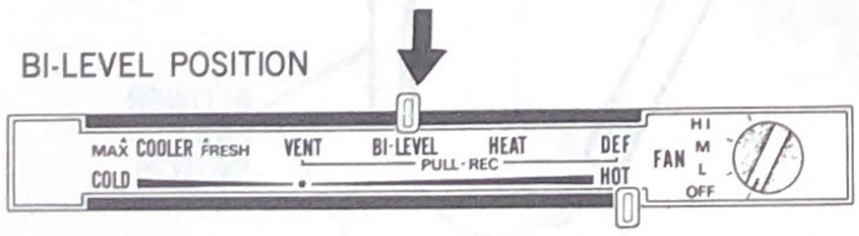

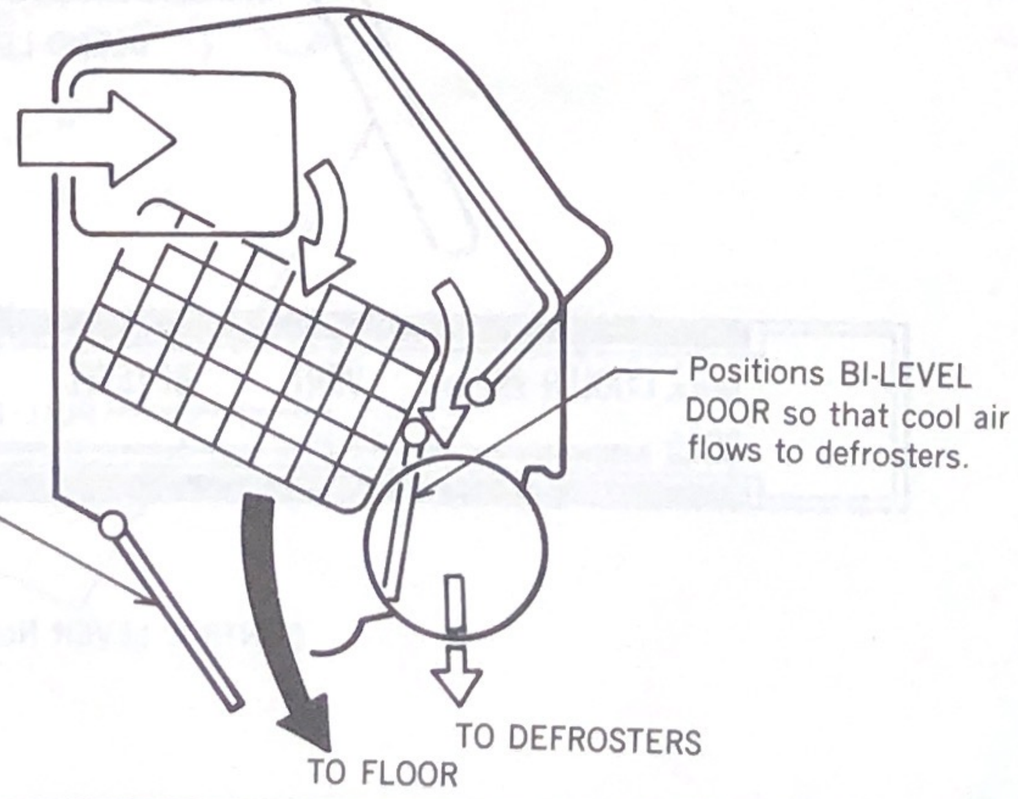

HEATER

•OPERATION

OPERATION

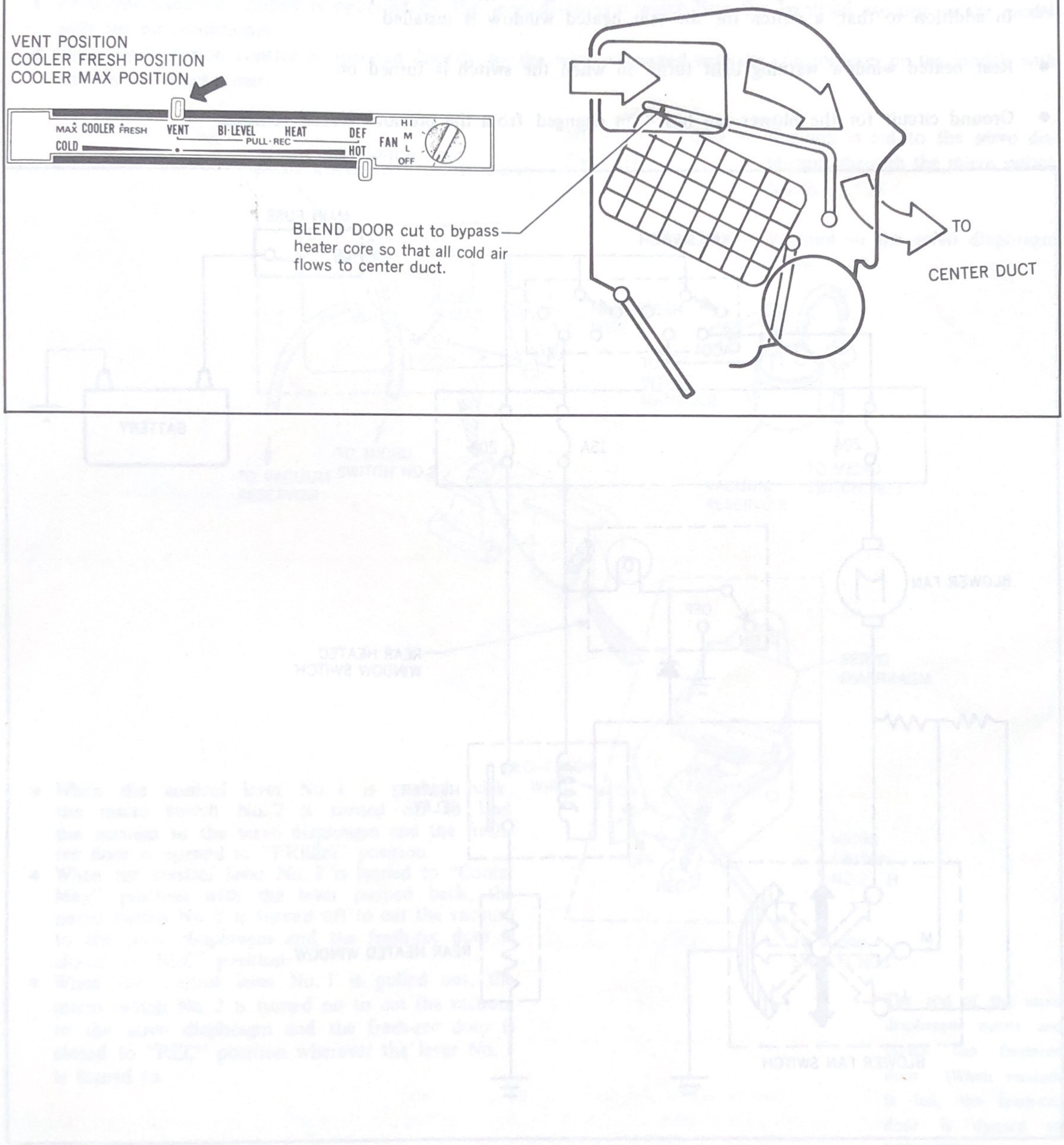

HEATER

•ELECTRICAL

ELECTRICAL

- Rear heated window is operated by the blower fan switch as in the previous Mazda vehicles. In addition to that, a switch for the rear heated window is installed.
- Rear heated window warning light turns on when the switch is turned on.
- Ground circuit for the blower fan has been changed from the previous Mazda vehicles.

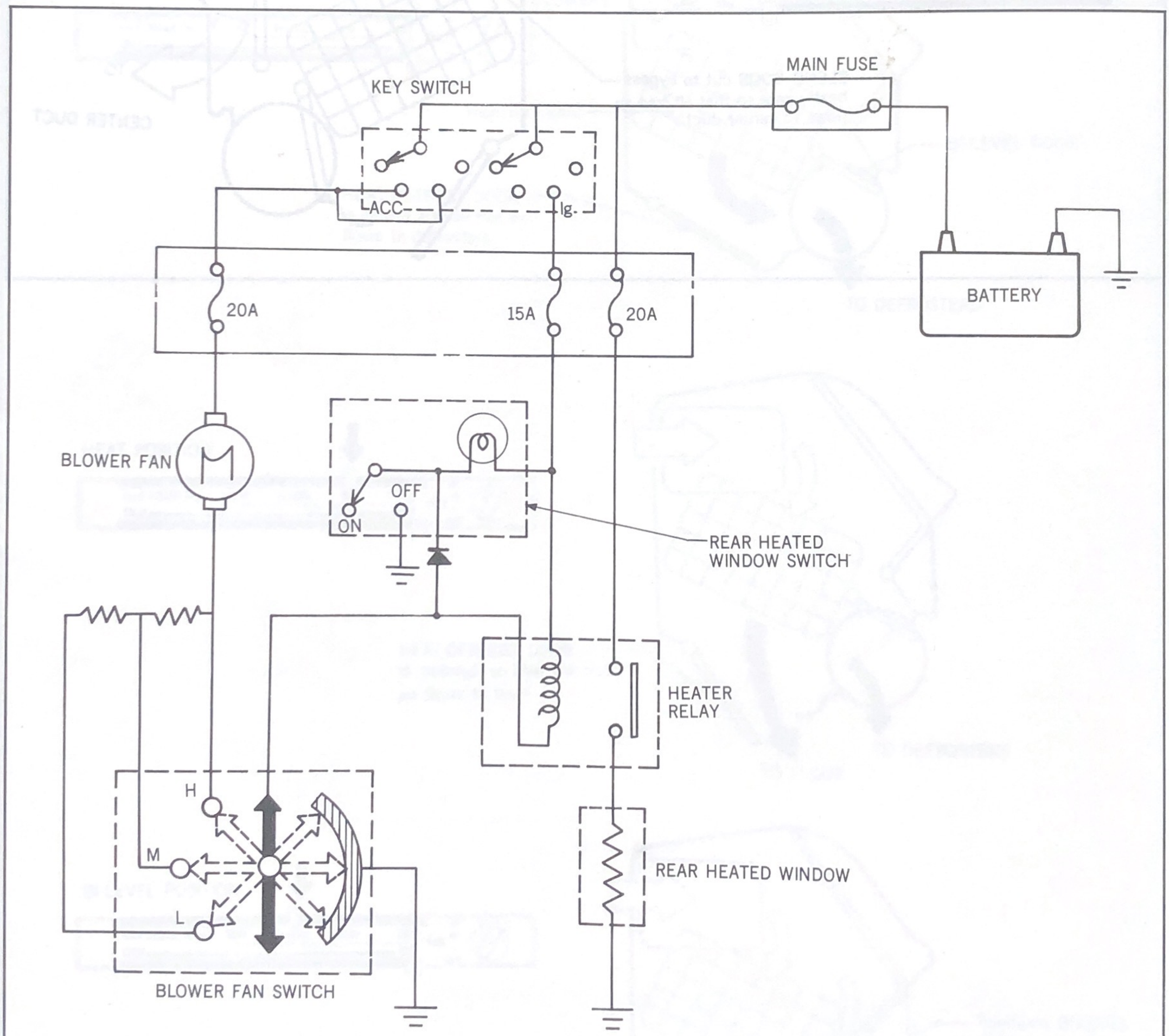

AIR CONDITIONER

FRESH-RECIRCULATION CONTROL

●OPERATION ●APPLICATION: RX-4

OPERATION

- Fresh-Recirculation control is operated by the servo diaphragm which uses the manifold vacuum on the models with the air conditioner.
- Fresh-Recirculation control is operated directly by the wire connected with the control lever on the models without the air conditioner.

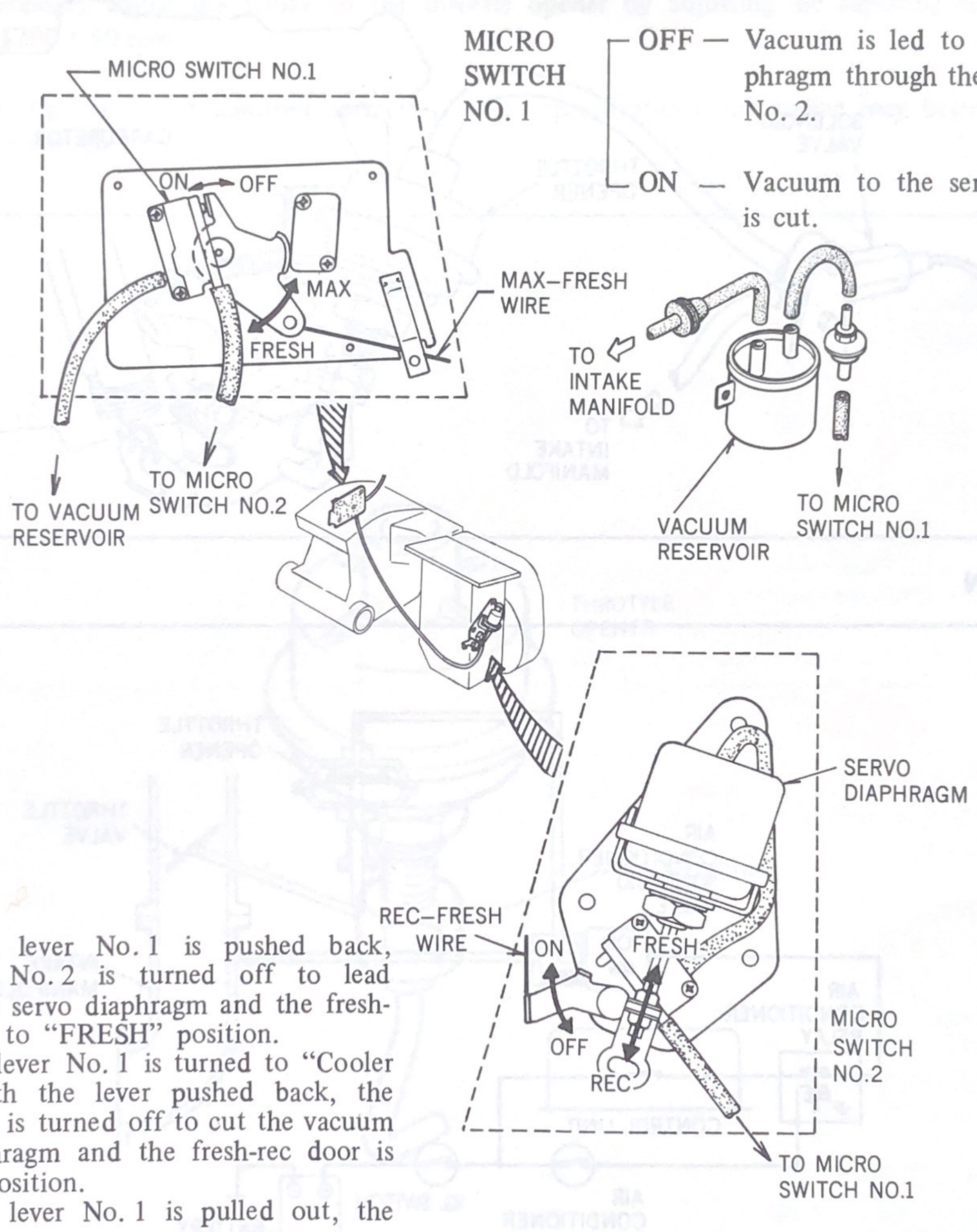

MICRO SWITCH NO. 1
- OFF — Vacuum is led to the servo diaphragm through the micro switch No. 2.
- ON — Vacuum to the servo diaphragm is cut.

- When the control lever No. 1 is pushed back, the micro switch No. 2 is turned off to lead the vacuum to the servo diaphragm and the fresh-rec door is opened to "FRESH" position.
- When the control lever No. 1 is turned to "Cooler Max" position with the lever pushed back, the micro switch No. 2 is turned off to cut the vacuum to the servo diaphragm and the fresh-rec door is closed to "REC" position.
- When the control lever No. 1 is pulled out, the micro switch No. 2 is turned on to cut the vacuum to the servo diaphragm and the fresh-rec door is closed to "REC" position wherever the lever No. 1 is turned to.

The rod of the servo diaphragm opens and closes the fresh-rec door. (When vacuum is led, the fresh-rec door is opened to "FRESH").

MICRO SWITCH NO.2
- OFF — Vacuum is led to the diaphragm.
- ON — Vacuum is cut.

THROTTLE OPENER

●DESCRIPTION ●OPERATION ●APPLICATION: RX-3, RX-4

DESCRIPTION

- The throttle opener is newly equipped on the models with the air conditioner. The throttle opener opens the throttle valve during the idling and raises the idling speed to keep its stability and increase the cooling capacity

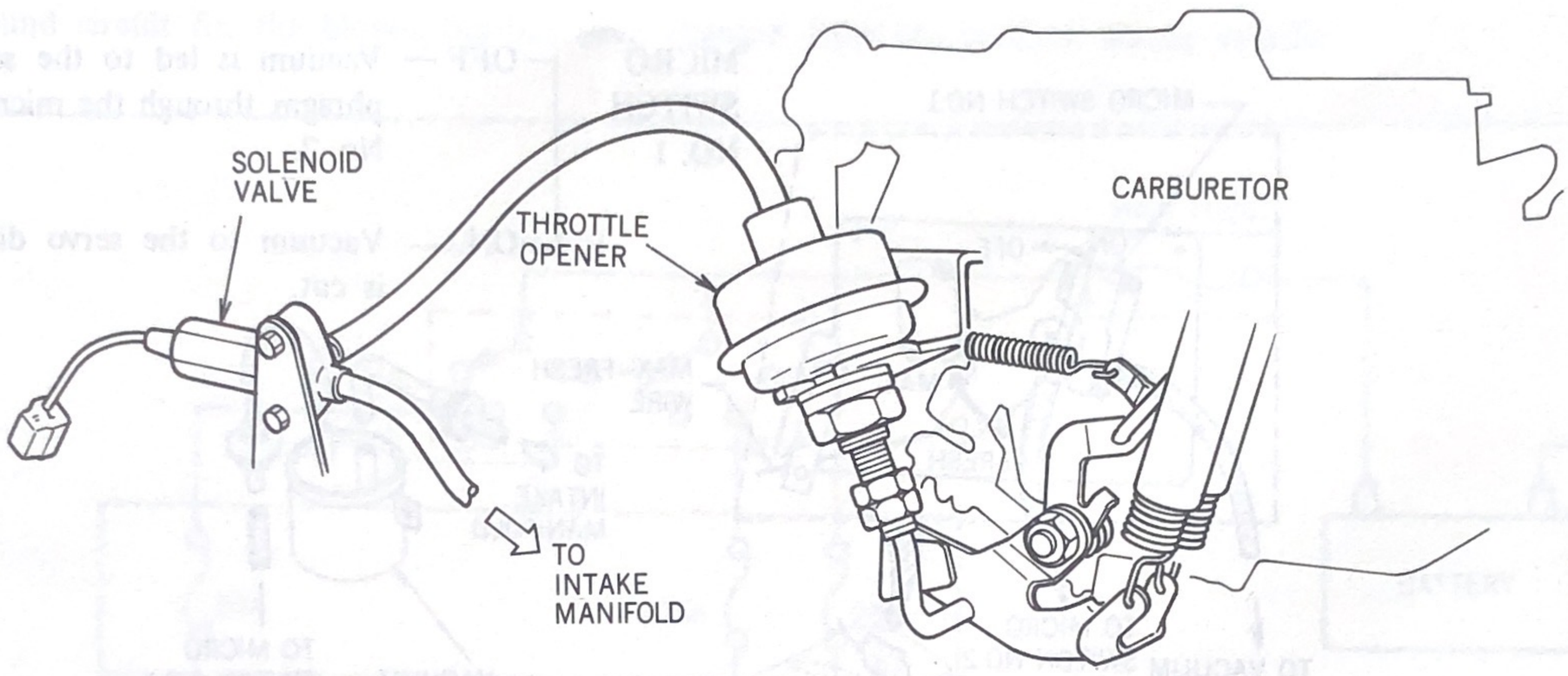

OPERATION

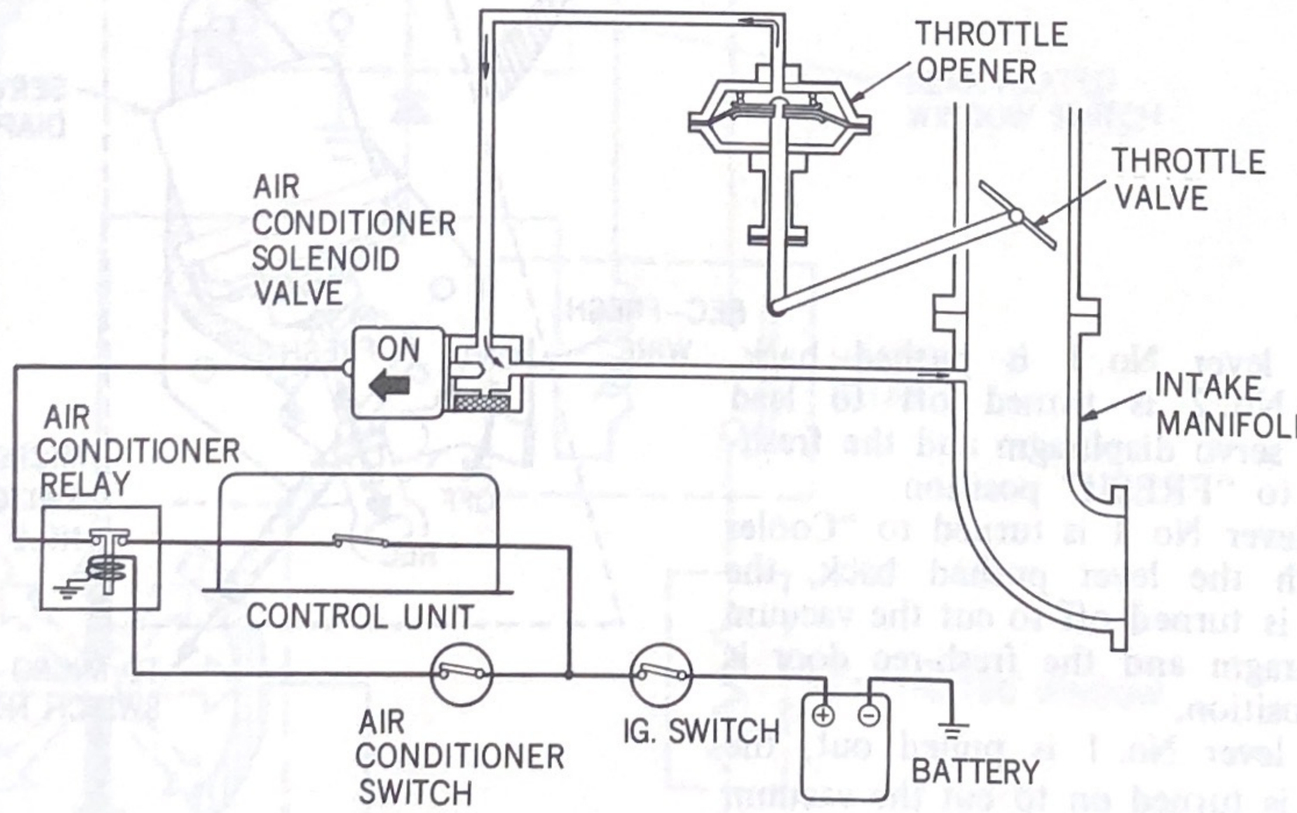

[When air conditioner switch is ON (under engine speed 1,150 rpm)]

1. When the engine speed is lower than 1,150 rpm, the low speed switch is turned on to close the circuit between the ignition switch and the air conditioner solenoid valve.
2. Thus, the solenoid valve is turned on to open the vacuum way between the throttle opener and the intake manifold.
3. As a result, the vacuum acts on the throttle opener diaphragm to open the primary throttle valve slightly more opened than at idling.
4. Consequently, the additional mixture is led into the intake manifold.

THROTTLE OPENER

•ADJUSTMENT •APPLICATION: RX-3, RX-4

ADJUSTMENT

1. Warm up the engine to the normal operating temperature.
2. Check and if necessary adjust the idle speed to the specification.
3. Disconnect the magnet clutch lead of the air conditioner compressor.
4. Turn the control lever No. 1 to the "COOLER" position, and turn on the fan switch.
5. Check and if necessary adjust the stroke of the throttle opener by adjusting the adjusting nuts so that the engine speed is 1200 ± 50 rpm.

NOTE: If the throttle opener is not adjusted correctly (to the specification), the engine may begin hunting with the air conditioner on.

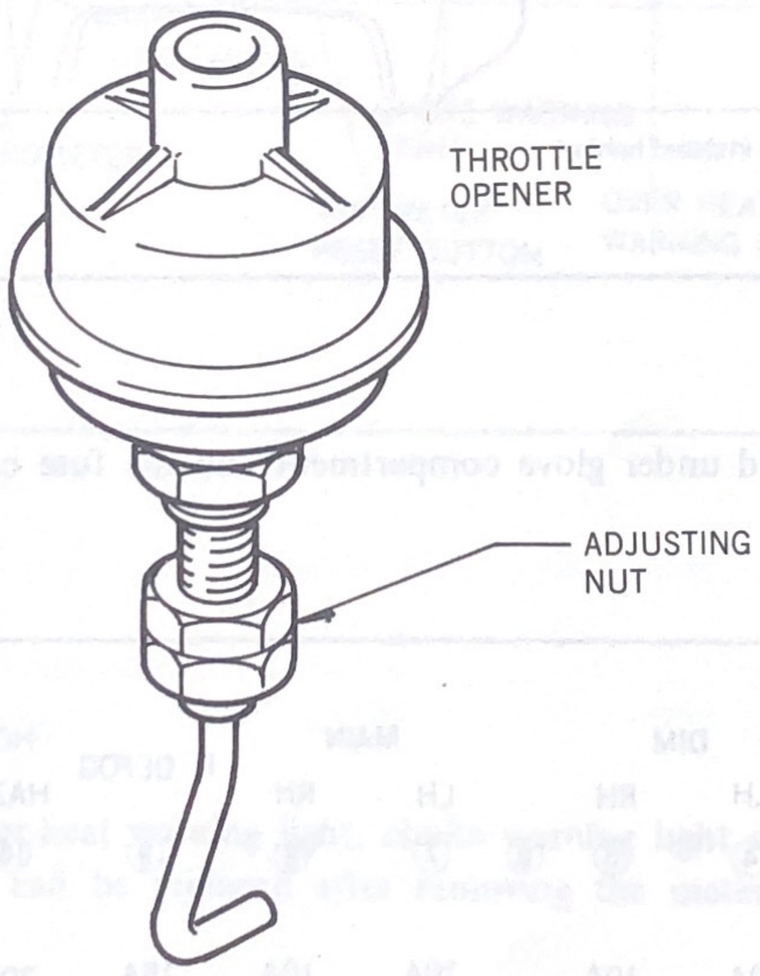

INSTRUMENT PANEL

●DESCRIPTION

DESCRIPTION

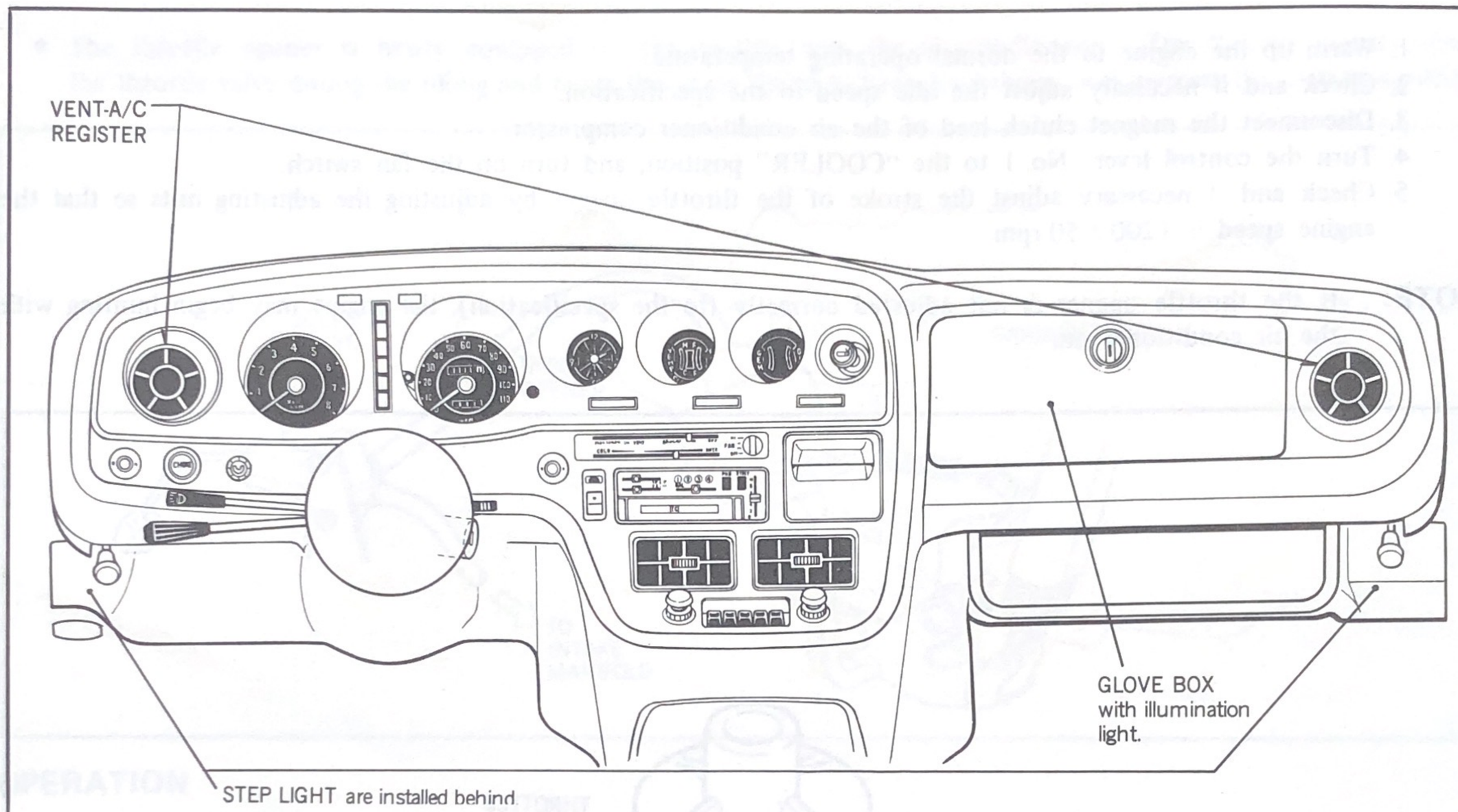

FUSE BOX

- The fuse box are installed under glove compartment and the fuse capacities and usages are marked on the up side of the fuse box cover.

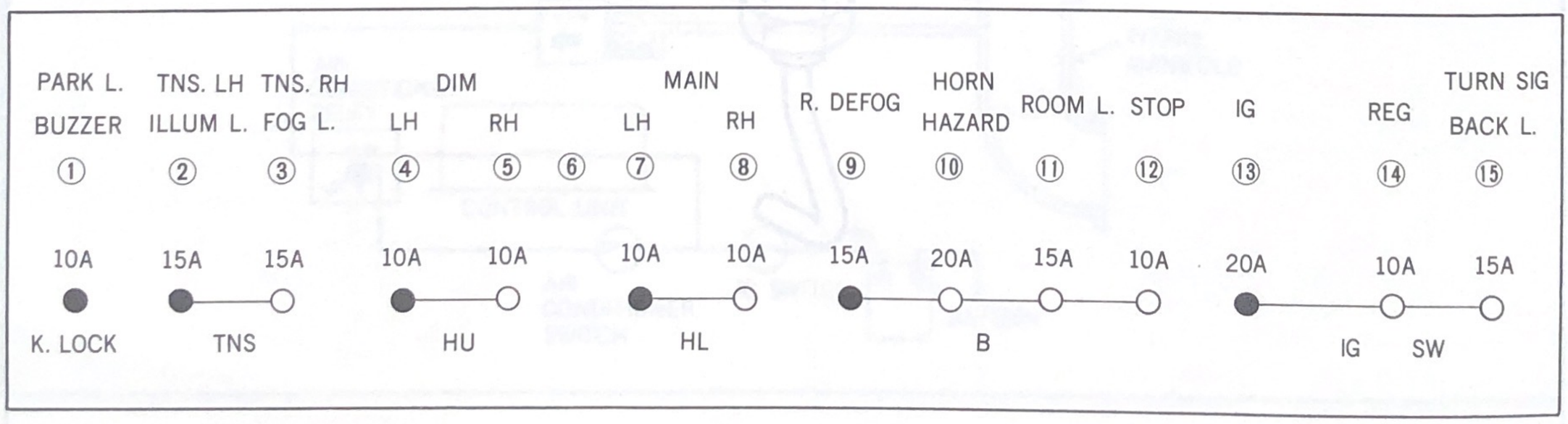

METER HOOD

•CONSTRUCTION •SERVICE SUMMARY

CONSTRUCTION

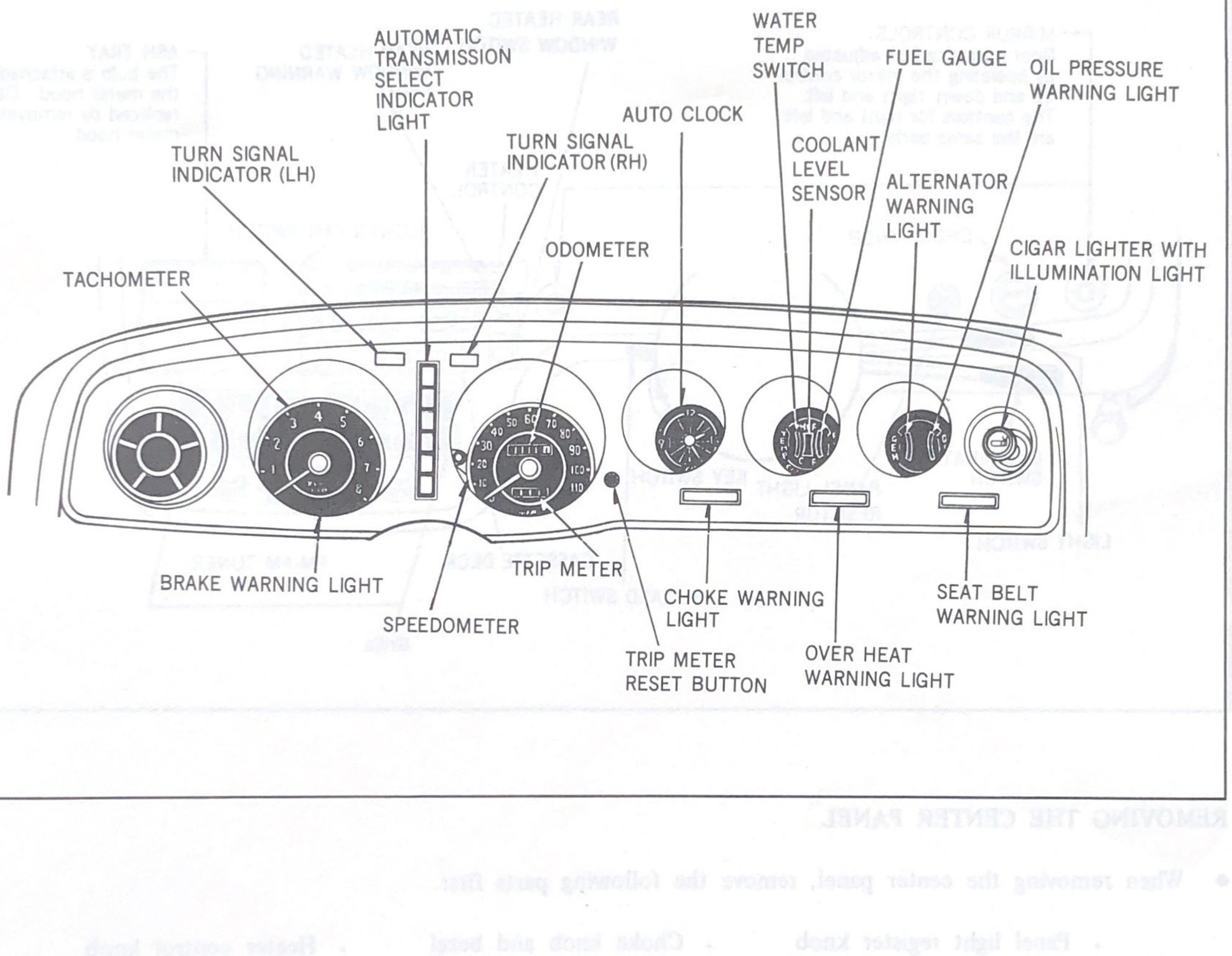

SERVICE SUMMARY

- The bulb for seat belt warning light, over-heat warning light, choke warning light and ash tray illumination light are installed on the meter hood so that can be replaced after removing the meter hood if necessary.

• CONSTRUCTION • SERVICE SUMMARY

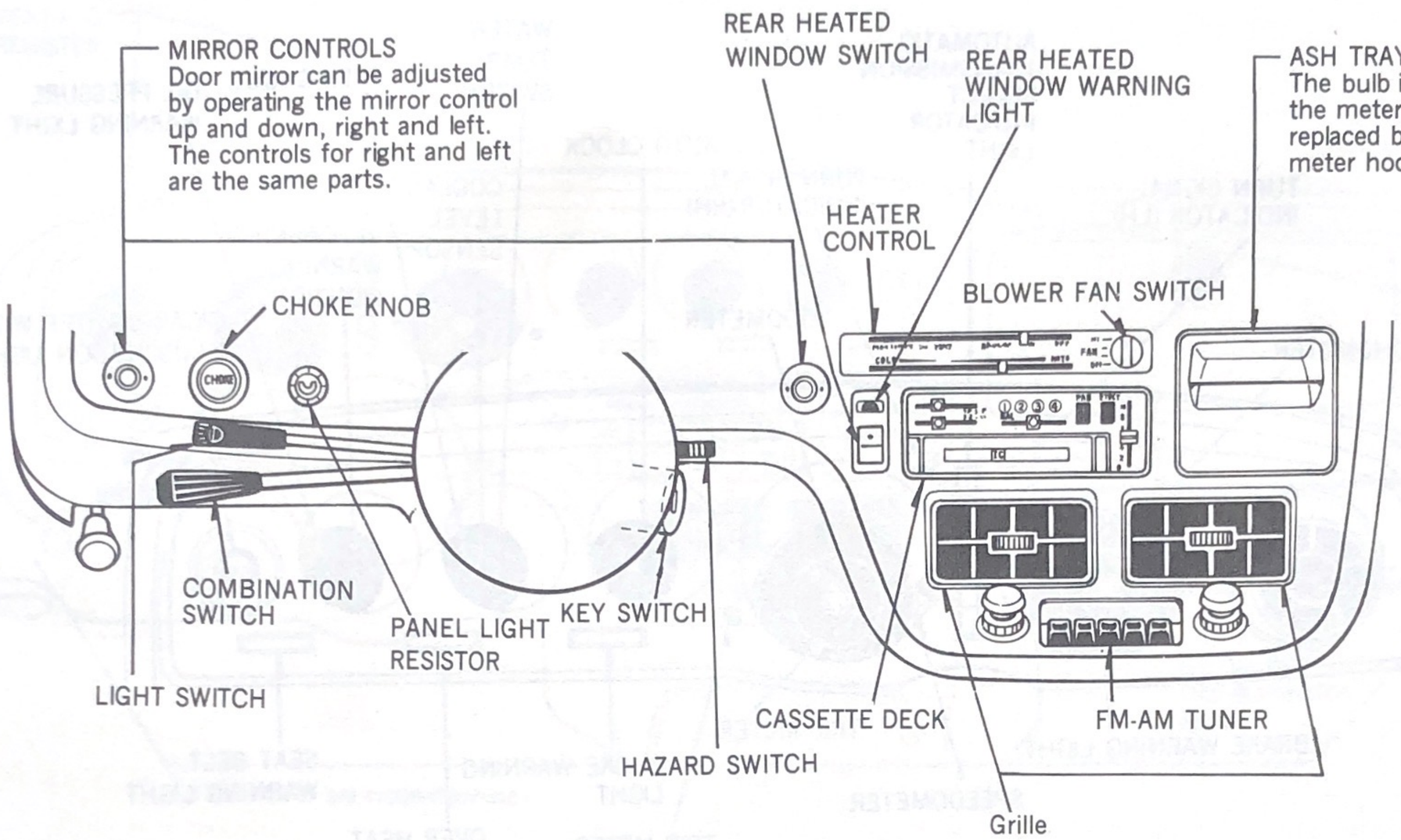

REMOVING THE CENTER PANEL

- When removing the center panel, remove the following parts first.
  - Panel light register knob
  - Radio knob and bezel
  - Choke knob and bezel
  - Mirror control left and right
  - Heater control knob