1977

Service Highlights

808(1300)
808(1600)
RX-4
COSMO

mazda

Toyo Kohyo Co., Ltd.

RECIPROCATING ENGINE

808(1300)

808(1600)

ENGINE	FEDERAL
KEY CHANGE	808 (1300)

KEY CHANGE

- The following items have been changed for 1977 model.

ITEM	REF. PAGE
FUEL SYSTEM	
○ IDLE SPEED AND MIXTURE	1 – 2
○ CARBURETOR SPECIFICATION	1 – 3
○ FUEL PUMP	1 – 4
IGNITION SYSTEM	
○ TWO TIMING IGNITION SYSTEM	1 – 5, 2 – 6 ~ 2 – 8
○ IGNITION TIMING	1 – 5

IDLE SPEED AND MIXTURE

ADJUSTMENT

FEDERAL

808 (1300)

ADJUSTMENT

The idle speed and mixture adjusting procedures are as follows.

IDLE SPEED ADJUSTMENT

1. Warm up the engine to the normal operating temperature.
2. Adjust the idle speed as specified by turning the throttle adjusting screw.

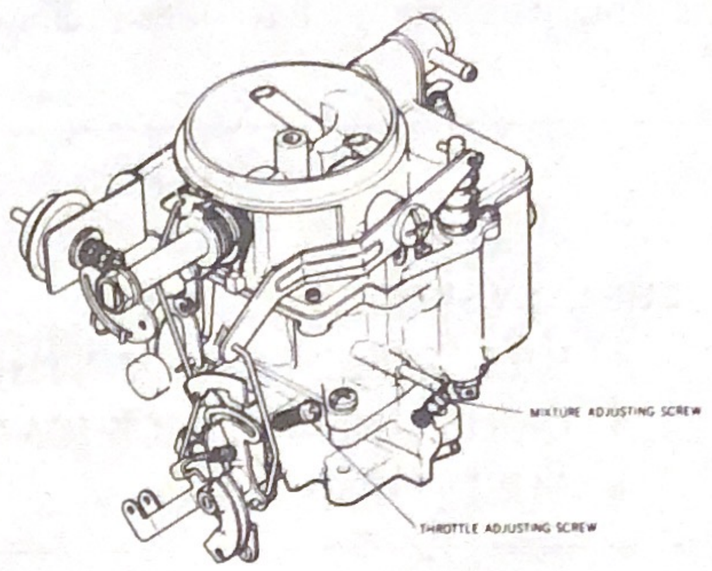

Fig. 1-1 Throttle and mixture adjusting screws

IDLE MIXTURE ADJUSTMENT

The idle mixture adjustment is usually done with the adjustable range of the idle limiter.

1. Adjust the idle speed, if necessary.
2. Disconnect the air hose and plug the port of the reed valve, as shown in Fig. 1-2.
3. Adjust the CO concentration as specified by turning the mixture adjusting screw.
4. Reconnect the air hose to the reed valve.
5. If the idle speed shifts from the specification as the result of the above, repeat the procedures (Step 1. ~ Step 5.).

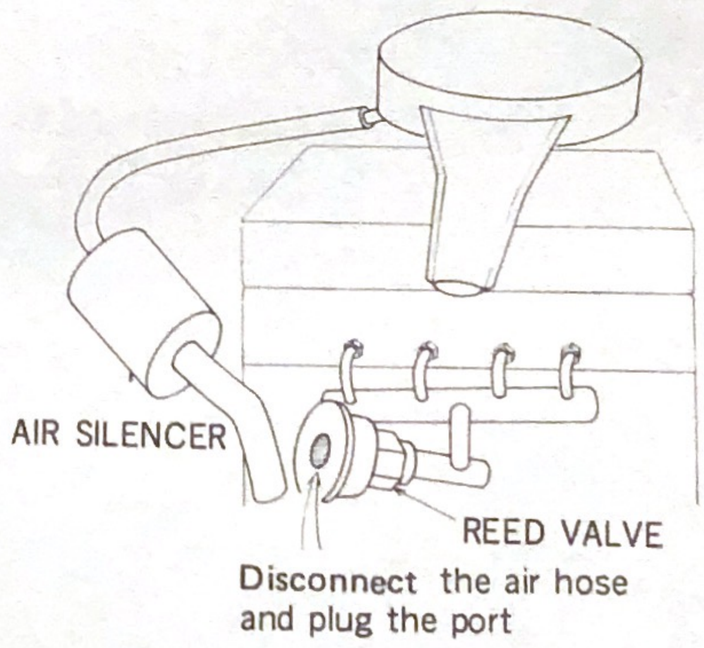

Fig. 1-2 Reed valve

SPECIFICATION

Idle speed (N-range)	700^{+50}_{-0} rpm
CO concentration	2.0 ± 0.5%

NOTE:

The idle CO concentration has been changed from $0.5^{+0.5\%}_{-0.2}$ to 2.0 ± 0.5%.

CARBURETOR SPECIFICATION	FEDERAL
DESCRIPTION	808 (1300)

CARBURETOR SPECIFICATION

- The jets have been changed as shown in the following table.

	1977	1976
Main jet:		
Primary	#106	#100
Slow jet:		
Primary	# 48	# 43

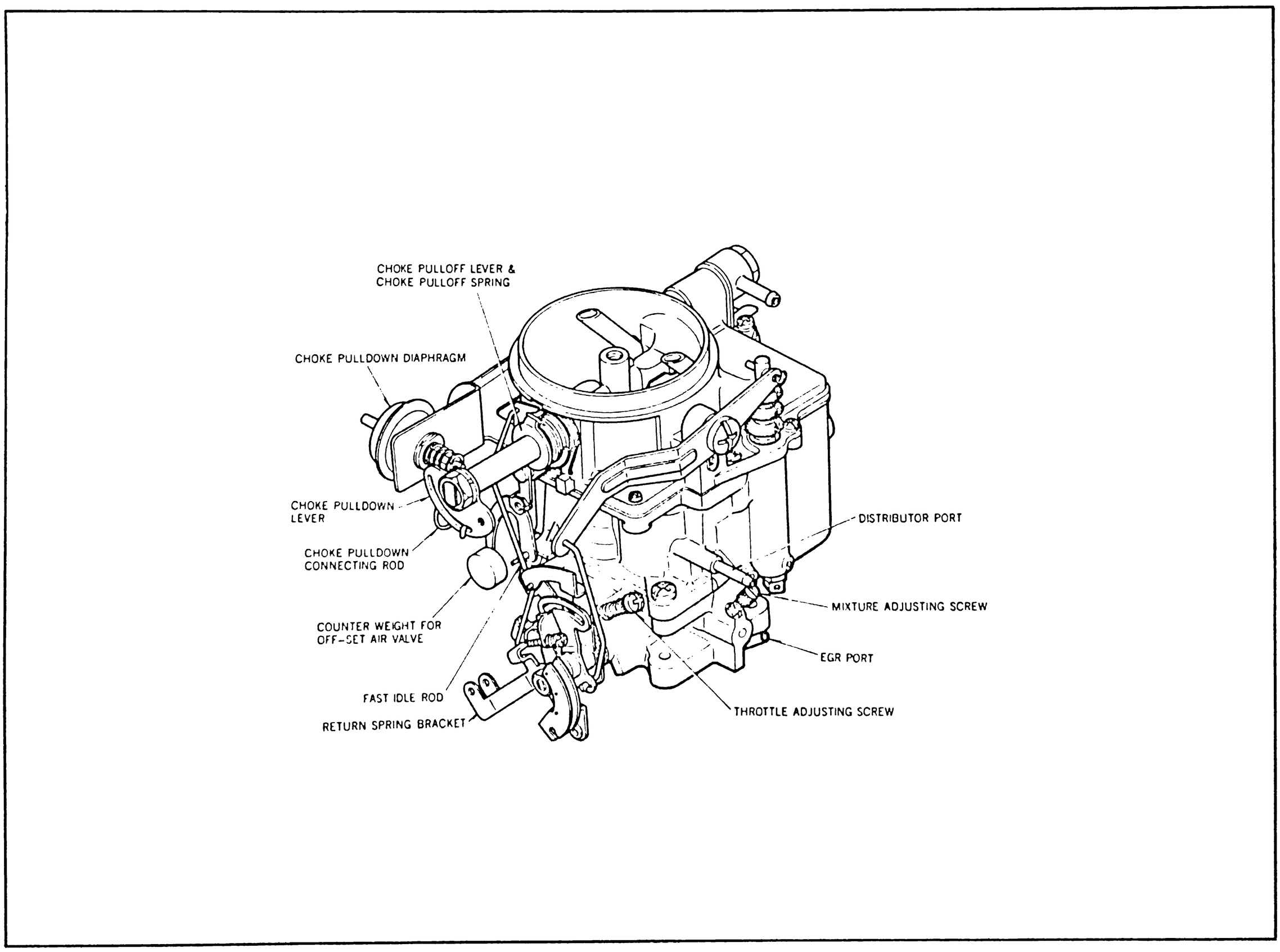

Fig. 1-3 Carburetor

FUEL PUMP

DESCRIPTION

FEDERAL
CALIFORNIA

808 (1300)

DESCRIPTION

- The fuel pump has been changed from the electrical to mechanical type.
- The feeding capacity and fuel pressure are as shown in the following table.

Feeding capacity		Fuel pressure (at any engine speed)
Capacity	Engine speed	
1200 cc/min. (1.27 U.S. quarts/min.)	650 rpm	0.20 ~ 0.27 kg/cm^2 (2.84 ~ 3.84 lb/in^2)
1500 cc/min. (1.59 U.S. quarts/min.)	2500 rpm	
1800 cc/min. (1.90 U.S. quarts/min.)	4900 rpm	

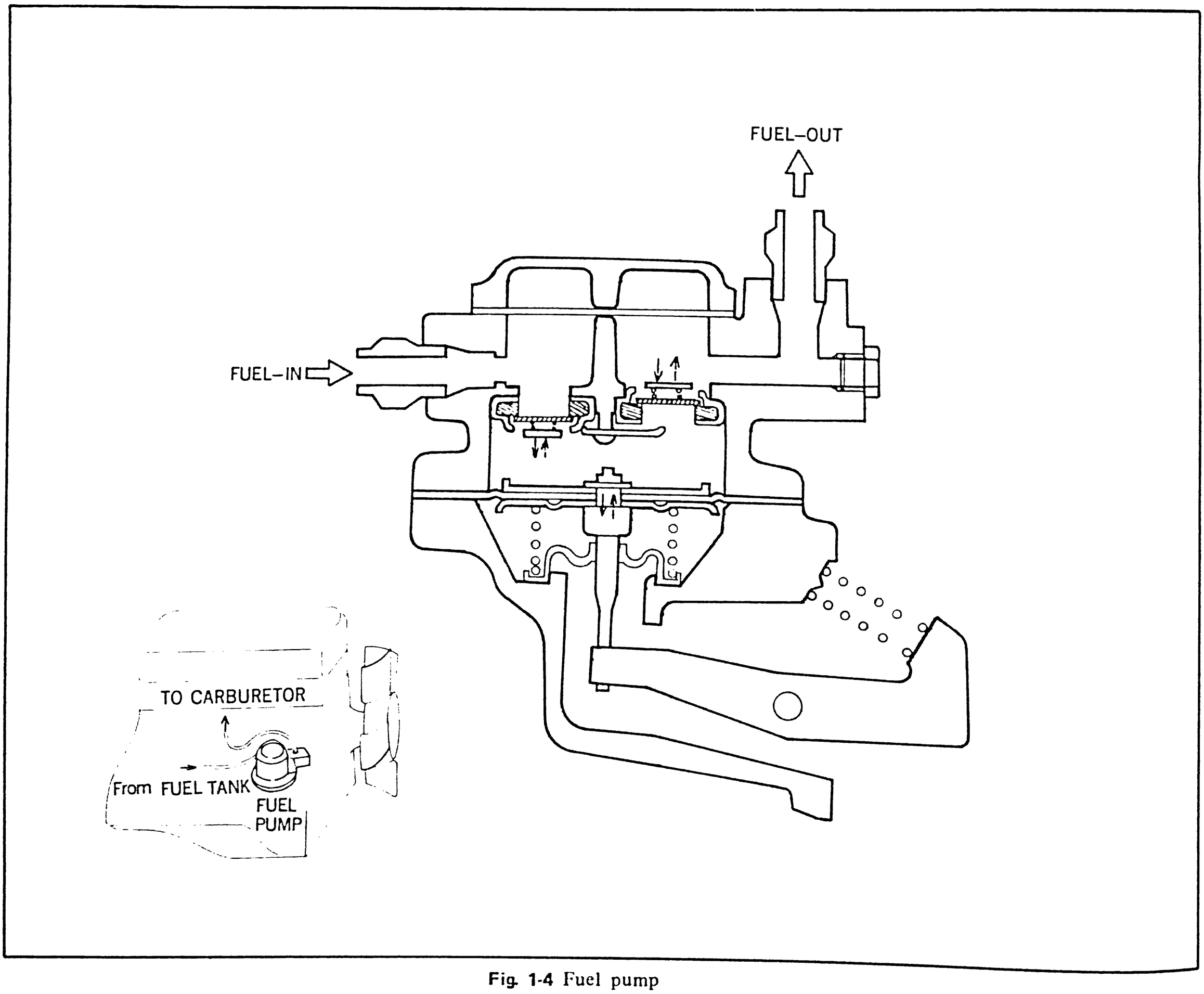

Fig. 1-4 Fuel pump

TWO TIMING IGNITION SYSTEM
IGNITION TIMING

ADJUSTMENT · DESCRIPTION

FEDERAL

808 (1300)

TWO TIMING IGNITION SYSTEM

- The two timing ignition system has been newly adopted.
  This system retards or advances the ignition timing. The retarded ignition timing reduces the NOx. Refer to page 2–6 ~ 2–8.

IGNITION TIMING ADJUSTMENT

The ignition timing adjusting procedures are as follows.

1. Check the air gap as shown in Fig. 1-5.
   The gap should be 0.012 ~ 0.014 in (0.3~0.35 mm).
   To adjust the gap, loosen the set screws and move the breaker plate until the correct gap is obtained.
2. Warm up the engine to the normal operating temperature and run the engine at the specified idle speed.
3. Check the retard ignition timing (7± 1° BTDC) by using a timing light. See Fig. 1-7.
4. If the timing is incorrect, rotate the distributor housing until the correct timing is obtained.
5. Disconnect the coupler from the accelerator switch to operate the advance (normal) timing, as shown in Fig. 1-6.
6. Check the advance timing (11° BTDC), as shown in Fig. 1-7.

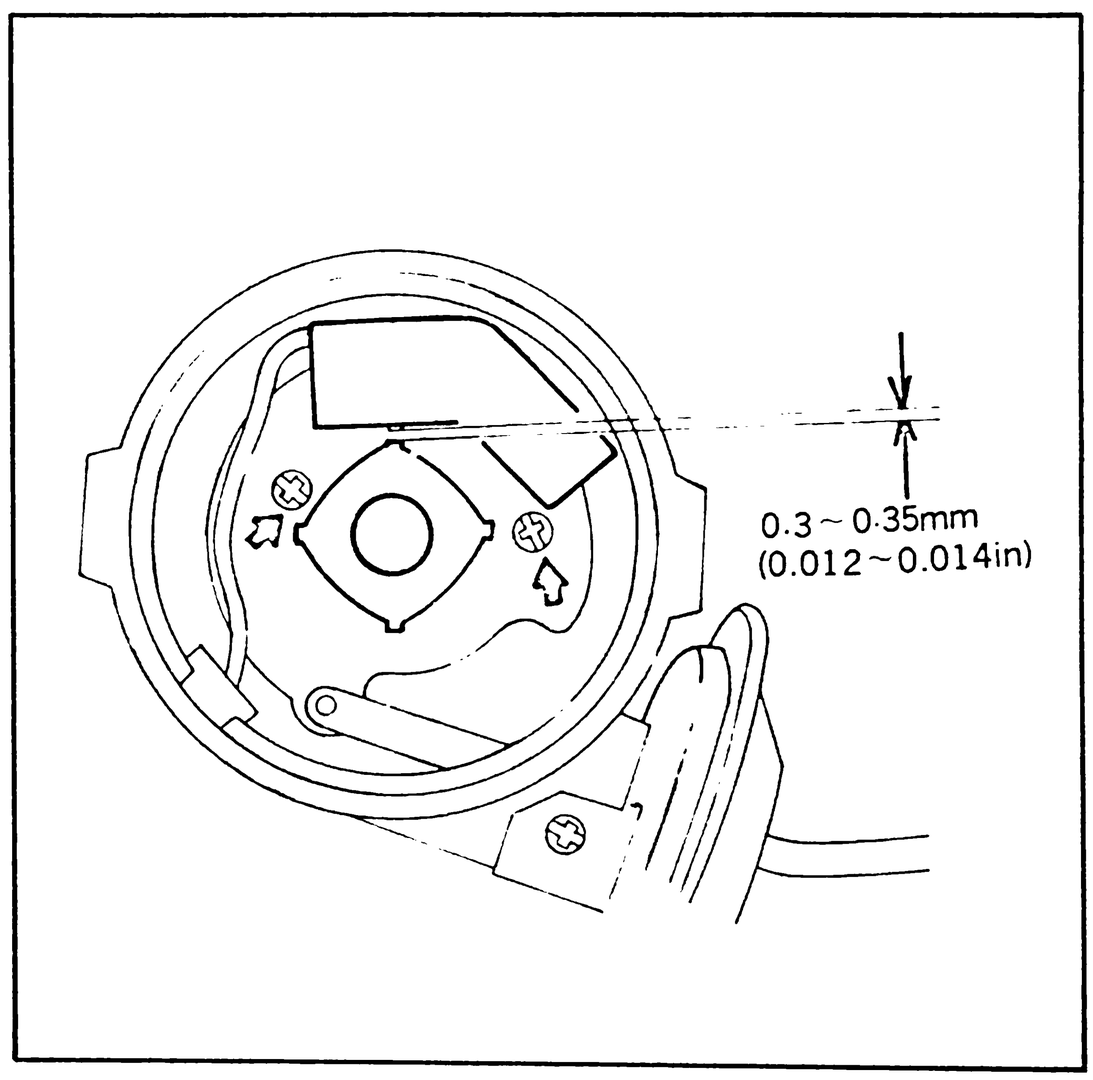

Fig. 1-5 Checking air gap

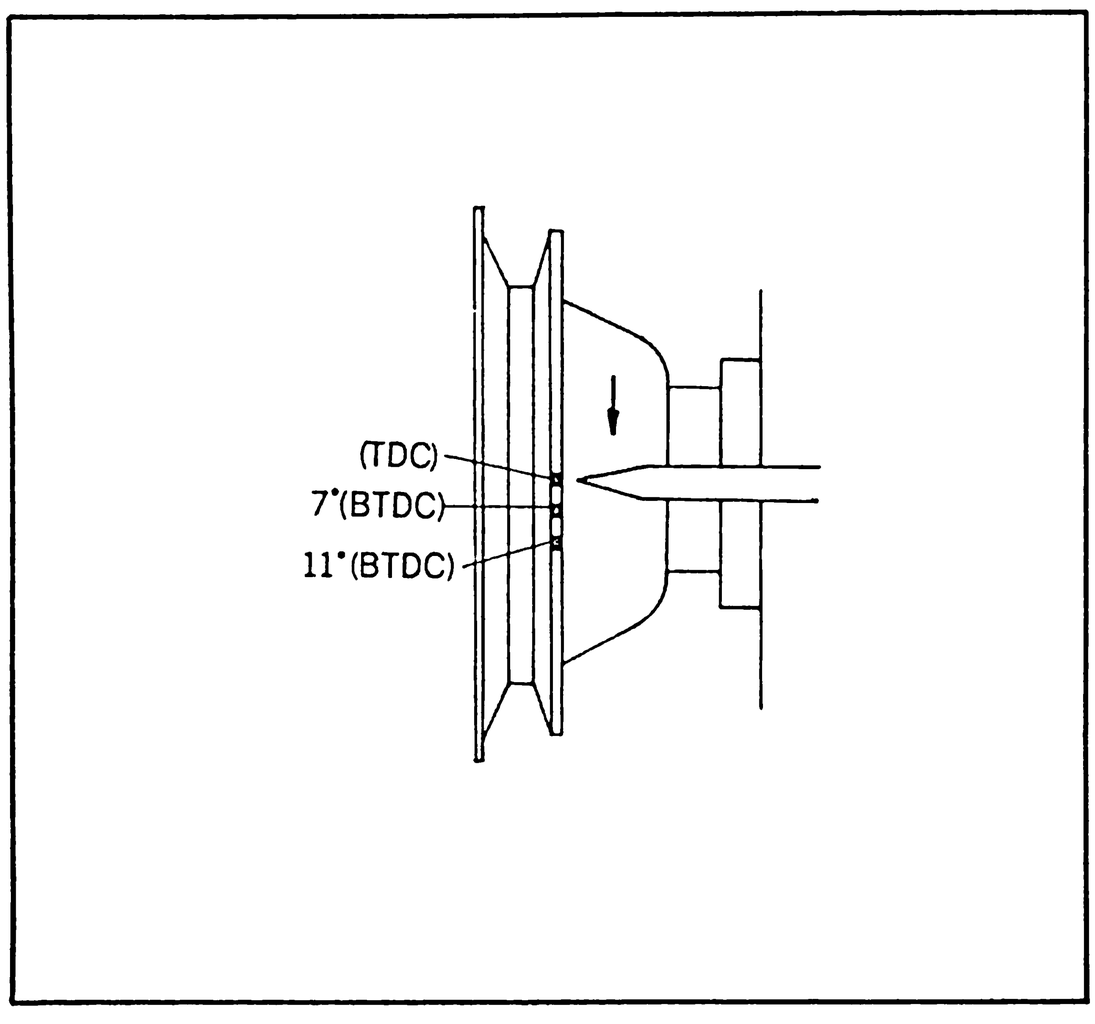

Fig. 1-7 Ignition timing mark

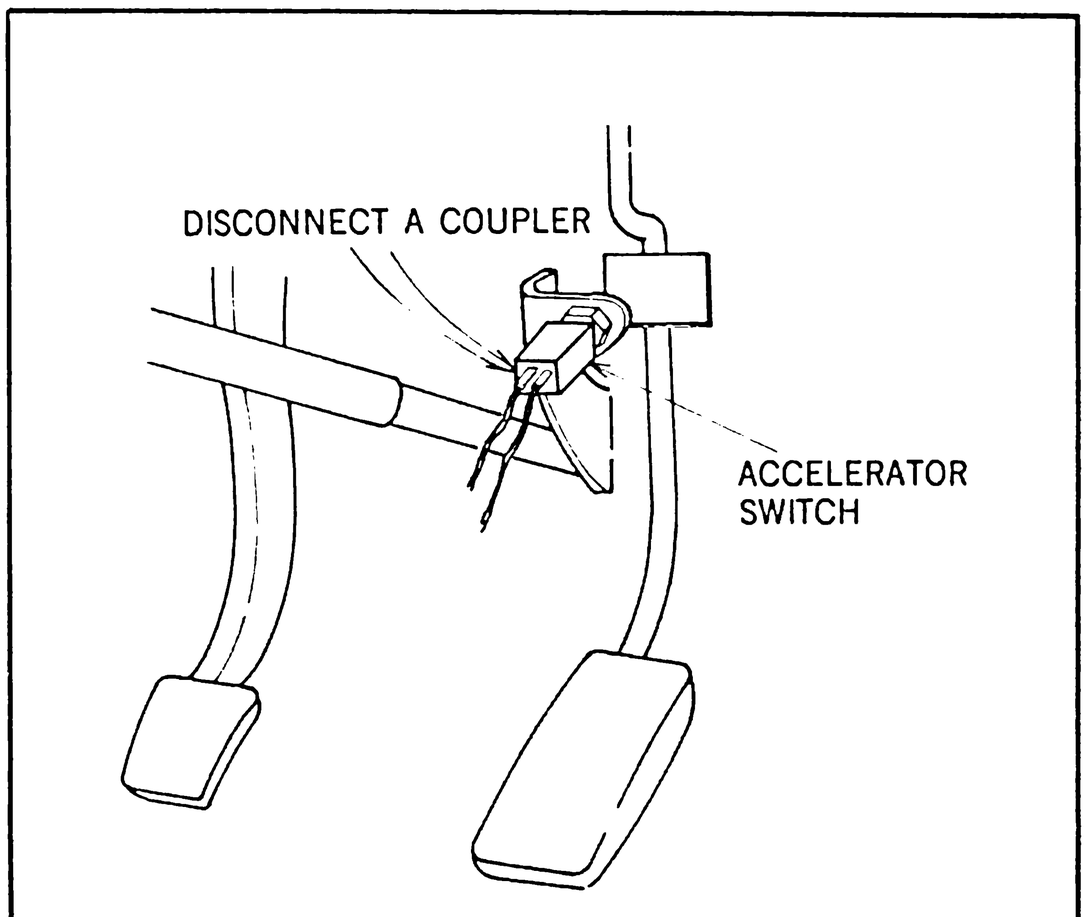

Fig. 1-6 Accelerator switch

ENGINE	FEDERAL
KEY CHANGE	808 (1600)

KEY CHANGE

- The modified items for 1977 model are as shown in the following table.

ITEM	REF. PAGE
FUEL SYSTEM • IDLE SPEED (A/T ONLY) AND CO CONCENTRATION	1 – 8
IGNITION SYSTEM • DUAL POINT DISTRIBUTOR • IGNITION TIMING	1 – 8, 2 – 14 ~ 2 – 16 1 – 9

IDLE SPEED AND CO CONCENTRATION DUAL POINT DISTRIBUTOR

DESCRIPTION

FEDERAL

808 (1600)

IDLE SPEED (A/T ONLY) AND CO CONCENTRATION

- The idle speed and CO concentration have been changed as shown in the following table.

	1977 MODEL	1976 MODEL
Idle speed (A/T only)	650^{+50}_{-0} rpm (D – range)	800^{+50}_{-0} rpm (N – range)
CO concentration	0.3% as possible (Less than 1.0%)	0.7% as possible (Less than 1.5%)

NOTE:
The idle speed and mixture adjusting procedures for 1977 model are same as 1976 model.

DUAL POINT DISTRIBUTOR

- The dual point distributor has been newly adopted.
  The dual point distributor retards or advances the ignition timing and the retarded ignition timing reduces the NOx.
  Refer to page 2–14 ~ 2–16.

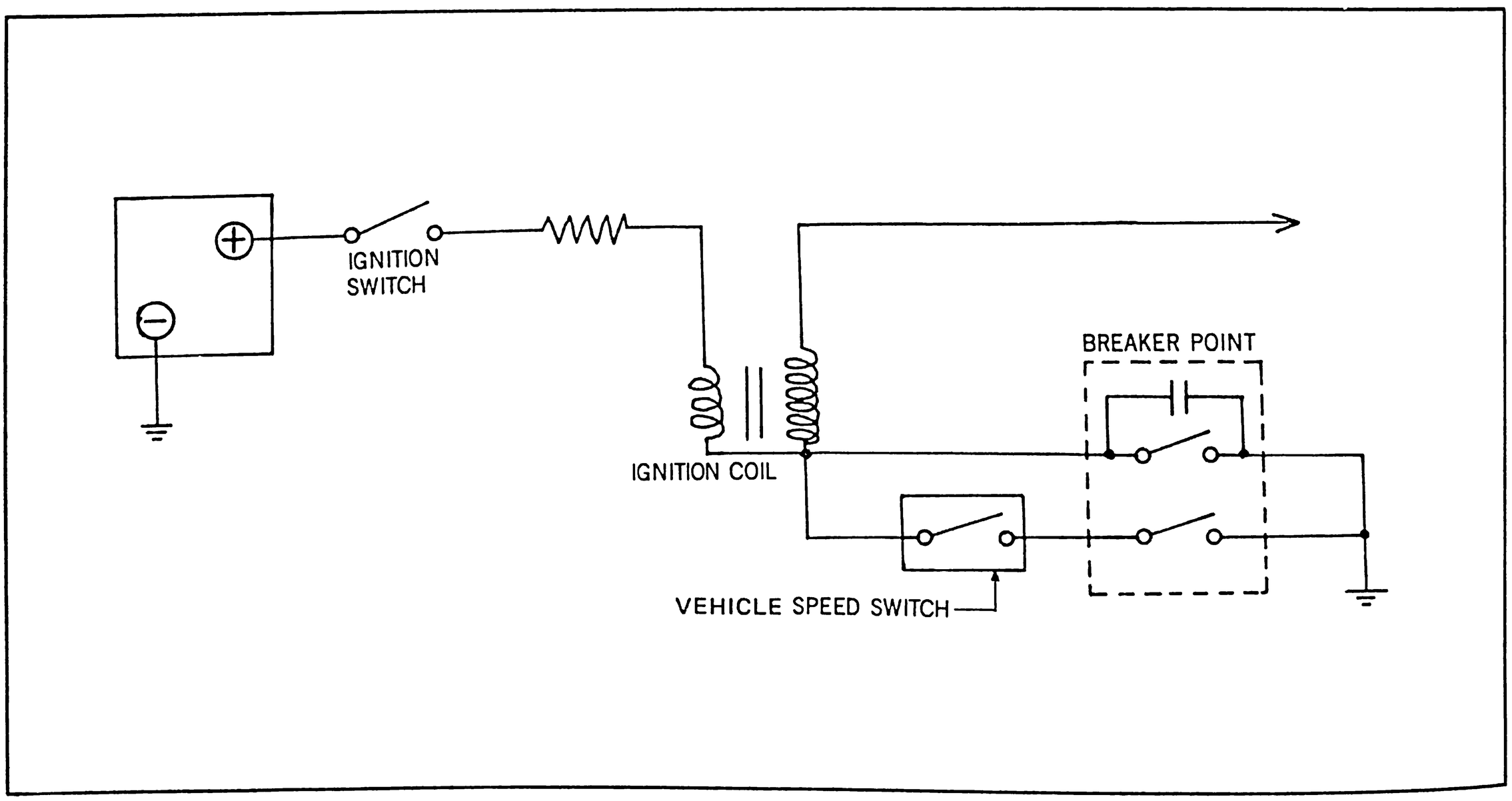

Fig. 1-8 Ignition system

IGNITION TIMING

ADJUSTMENT

FEDERAL

808 (1600)

ADJUSTMENT

The adjusting procedures are as follows.

1. Warm up the engine to the normal operating temperature.
2. Disconnect the coupler connecting to the breaker points and connect a jumper wire to the advance terminals in the coupler to operate the advance (normal) point, as shown in Fig. 1-9.
3. Run the engine at the specified idle speed.
   (M/T: Neutral, A/T: D–range)
4. Check the advance timing by using a timing light.
5. If the timing is incorrect, loosen the distributor locking bolt and rotate the distributor housing until the correct timing is obtained.
   Then, tighten the locking bolt and recheck the ignition timing.
6. Reconnect the coupler.
7. Check the retard timing by using a timing light.
8. If the timing is incorrect, loosen the retard breaker plate set screws and adjust the retard timing by moving the breaker plate.
   Do Not rotate the distributor housing.

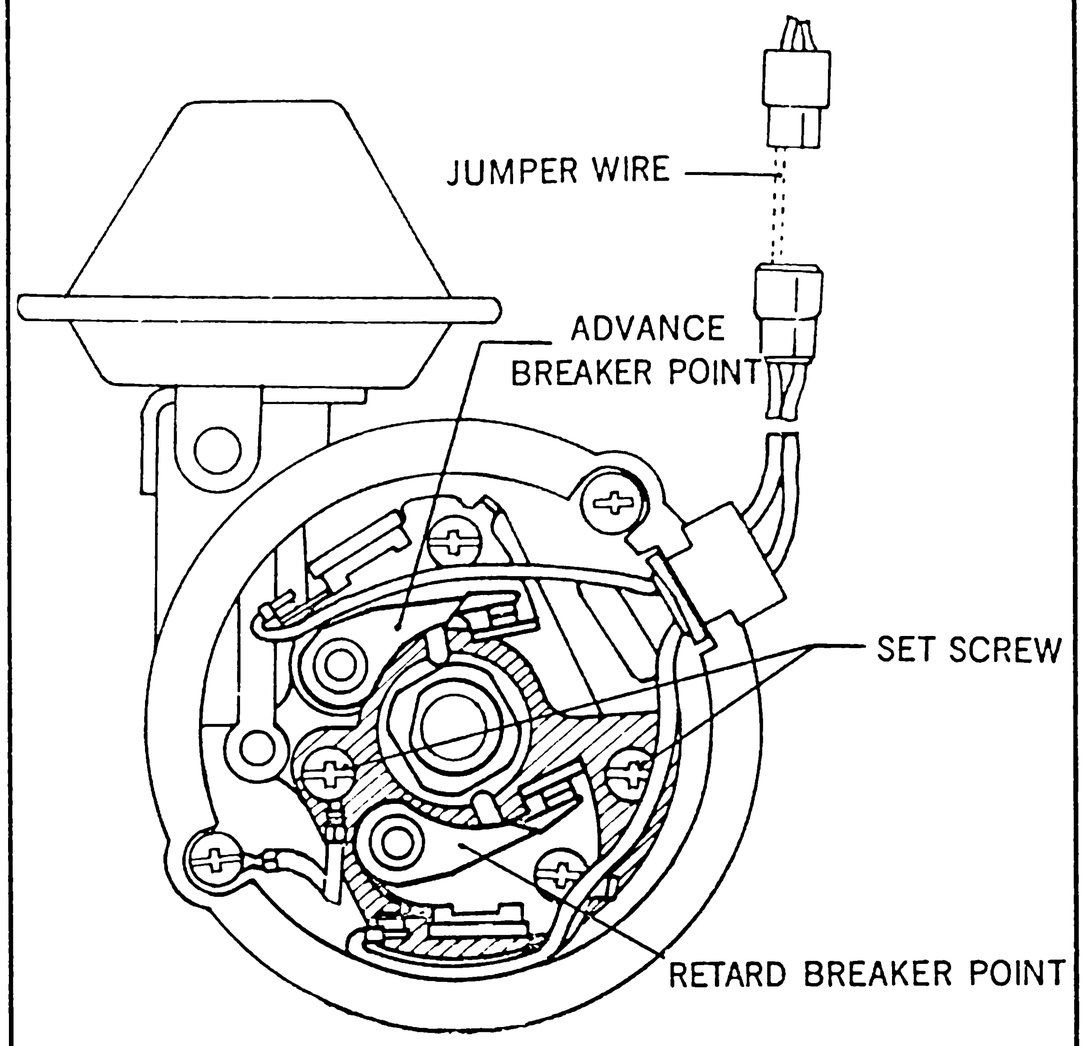

Fig. 1-9 Dual point distributor

SPECIFICATION

Advance timing	13° BTDC
Retard timing	5° BTDC

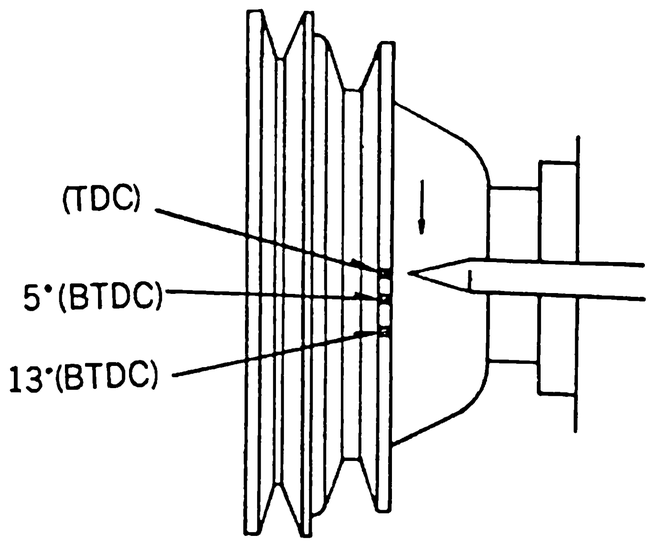

Fig. 1-10 Ignition timing mark

ENGINE KEY CHANGE	CALIFORNIA 808 (1300)

KEY CHANGE

- The following items have been changed for 1977 model.

ITEM	REF. PAGE
FUEL SYSTEM	
○ CARBURETOR SPECIFICATION	1 – 12
● FUEL PUMP	1 – 4

CARBURETOR SPECIFICATION

DESCRIPTION	CALIFORNIA
	808 (1300)

DESCRIPTION

- The modified item is shown in the following table.

	1977	1976
Main jet: Primary	#112	#110

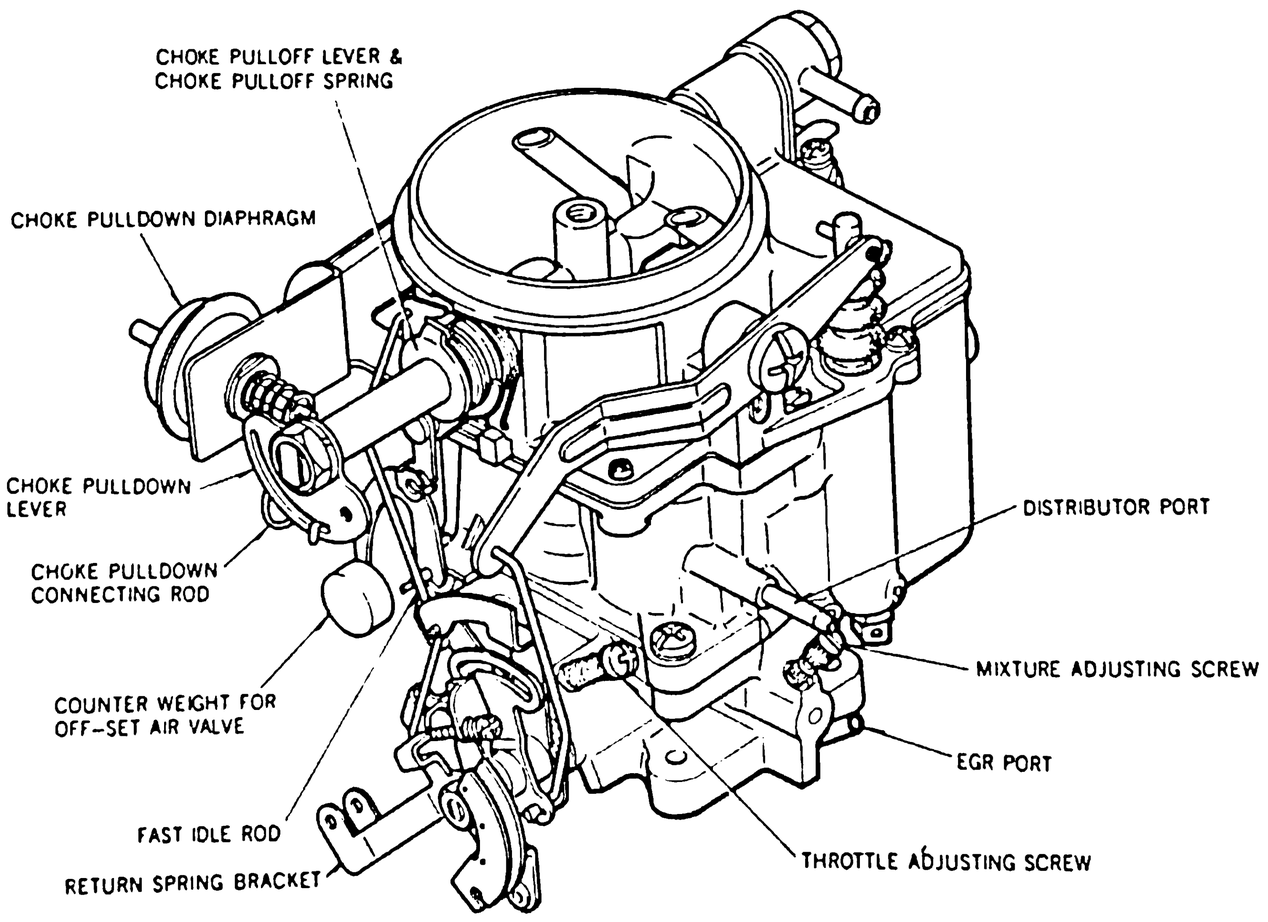

Fig. 1-11 Carburetor

ENGINE	CALIFORNIA
KEY CHANGE	808 (1600)

KEY CHANGE

- The modified items are as shown in the following table.

ITEM	REF. PAGE
ENGINE	
○ VALVE TIMING	1 – 14
○ PORT LINER	1 – 14
FUEL SYSTEM	
○ INTAKE MANIFOLD	1 – 14
○ IDLE SPEED (A/T ONLY)	1 – 15
○ CARBURETOR SPECIFICATION	1 – 15

1

VALVE TIMING . PORT LINER INTAKE MANIFOLD

CALIFORNIA

808 (1600)

DESCRIPTION

VALVE TIMING

- The valve timing has been changed as follows.

	INTAKE VALVE		EXHAUST VALVE	
	Opens	Closes	Opens	Closes
1977	18° BTDC	49° ABDC	62° BBDC	5° ATDC
1976	13° BTDC	54° ABDC	57° BBDC	10° ATDC

PORT LINER

- The port liner has been installed on the exhaust port of the cylinder head in order to prevent lowering of exhaust gas temperature, as shown in Fig. 1-12.

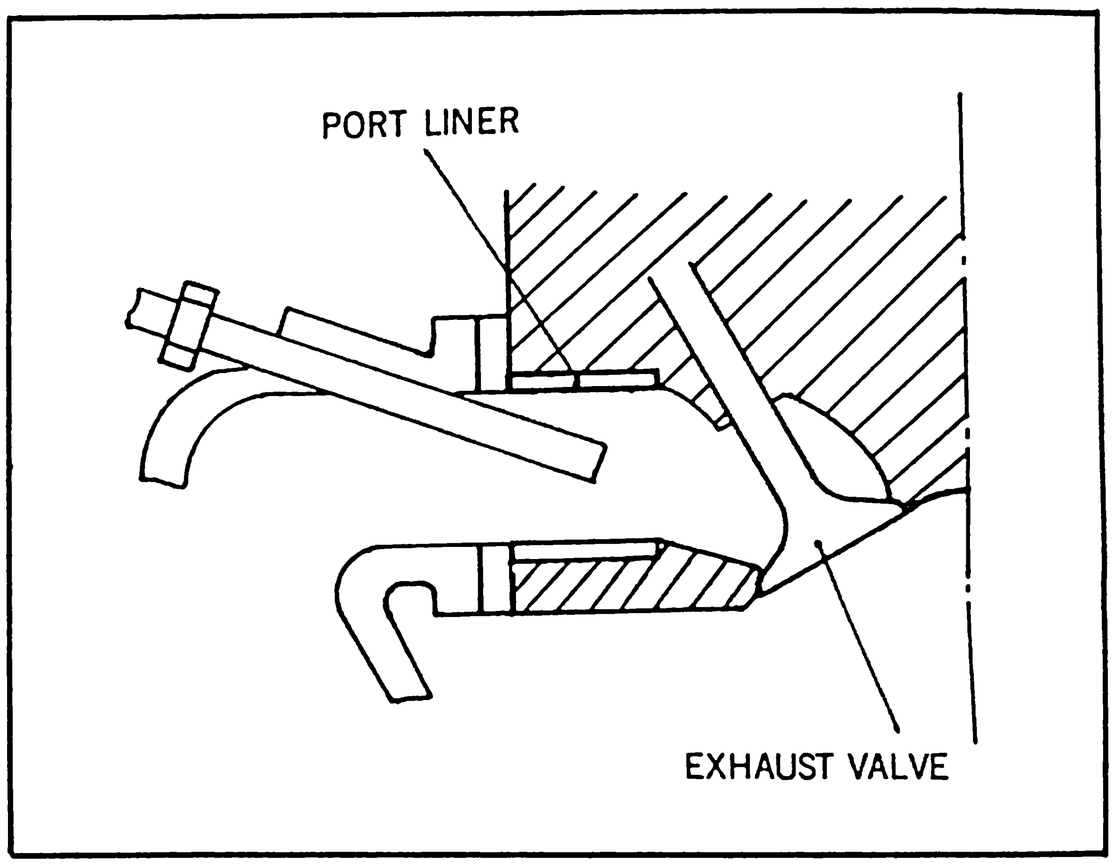

Fig. 1-12 Port liner

INTAKE MANIFOLD

- The capacity of intake manifold hot spot has been increased to further improve the fuel vaporization at cold condition.

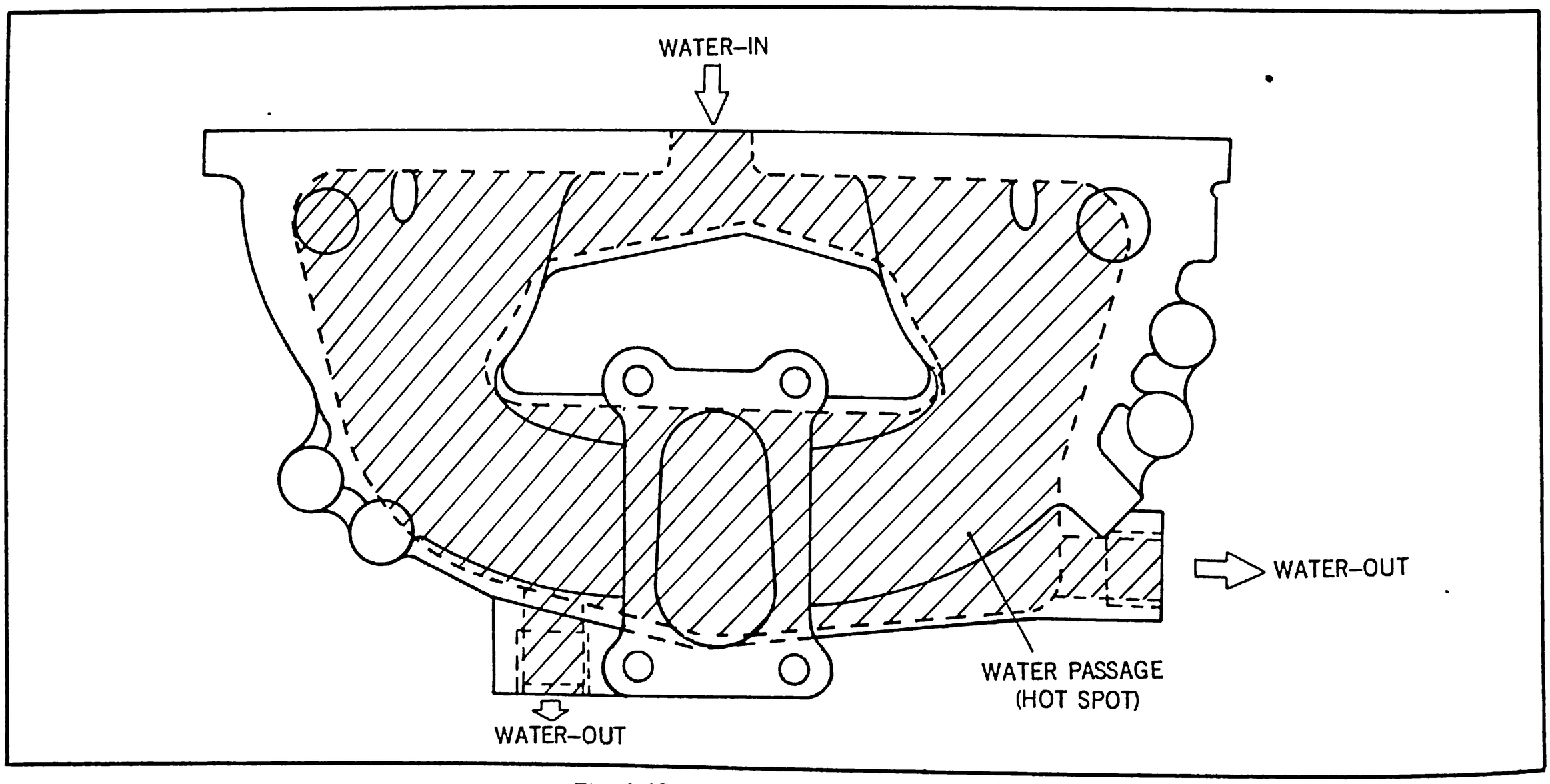

Fig. 1-13 Intake manifold hot spot

IDLE SPEED CARBURETOR SPECIFICATION

DESCRIPTION

CALIFORNIA

808 (1600)

IDLE SPEED (A/T ONLY)

- The idle speed has been changed as follows.

	1977	1976
Idle speed (A/T only)	650^{+50}_{-0} rpm (D – range)	800^{+50}_{-0} rpm (N – range)
CO concentration	Same as 1976	1.5 ± 0.6 %

NOTE:

The idle speed and mixture adjusting procedures are same as 1976 model.

CARBURETOR SPECIFICATION

- The modified items are as shown in the following table.

	1977	1976
Main jet:		
Primary	# 102	# 110
Secondary	# 135	# 140
Main air bleed:		
Primary	# 50	# 60
Slow jet		
Primary	# 42	# 46
Secondary	# 70	# 80
Slow air bleed:		
Primary	# 170	# 200
Venturi diameter:		
Primary	22 x 15 x 8 mm (0.87 x 0.59 x 0.31 in)	23 x 15 x 8 mm (0.90 x 0.59 x 0.31 in)

ENGINE	CANADA
KEY CHANGE	808 (1300)

KEY CHANGE

ITEM	REF. PAGE
FUEL SYSTEM	
• FUEL PUMP	1 – 18

FUEL PUMP

CANADA

DESCRIPTION

808 (1300)

DESCRIPTION

- The fuel pump has been changed in shape as shown in Fig. 1-14.
- The feeding capacity and fuel pressure are as follows.

Feeding capacity		Fuel pressure
Capacity	Engine speed	
900 cc/min. (0.79 Imp. quarts/min.)	650 rpm	0.20 ~ 0.27 kg/cm² (2.84 ~ 3.84 lb/in²)
1200 cc/min. (1.06 Imp. quarts/min.)	2500 rpm	
1400 cc/min. (1.23 Imp. quarts/min.)	4900 rpm	

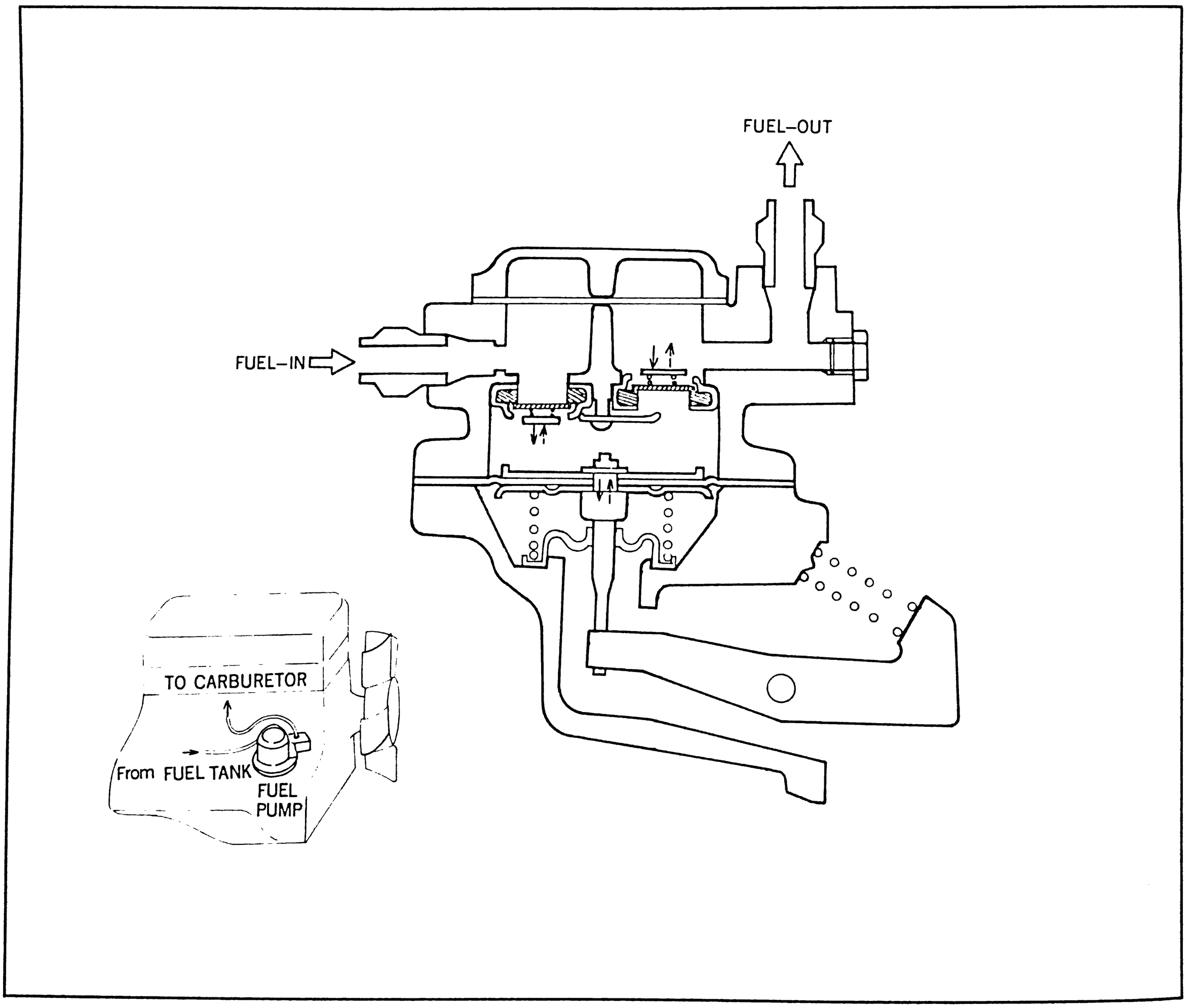

Fig. 1-14 Fuel pump

ENGINE	CANADA
KEY CHANGE	808 (1600)

KEY CHANGE

- The modified items for 1977 model are as follows.

ITEM	REF. PAGE
FUEL SYSTEM	
○ IDLE SPEED (A/T ONLY)	1 – 20
○ CARBURETOR SPECIFICATION	1 – 20
○ INTAKE MANIFOLD	1 – 21
IGNITION TIMING	
○ DUAL POINT DISTRIBUTOR	1 – 22, 2 – 31 ~ 2 – 32
○ IGNITION TIMING	1 – 22 ~ 1 – 23

IDLE SPEED (A/T ONLY)

- The idle speed has been changed as follows.

1976	1976
650^{+50}_{-0} rpm (D – range)	800^{+50}_{-0} rpm (N – range)

NOTE:
The idle speed and mixture adjusting procedures are same as 1976 model.

CARBURETOR SPECIFICATION

- The modified items are as follows.

	1977		1976	
	M/T	A/T	M/T	A/T
Main jet:				
Primary	# 97	# 97	# 106	# 110
Secondary	# 140	# 140	# 155	# 145
Main air bleed:				
Primary	# 60	# 60	# 50	# 50
Secondary	# 50	# 50	# 70	# 70
Slow jet:				
Primary	# 44	# 44	# 58	# 64
Secondary	# 100	# 100	# 80	# 80
Slow air bleed:				
Primary	# 210	# 210	# 150	# 150
Secondary	# 170	# 170	# 100	# 140
Main nozzle:				
Primary	2.1 mm (0.08 in)	2.1 mm (0.08 in)	2.3 mm (0.09 in)	2.3 mm (0.09 in)
Secondary	2.8 mm (0.11 in)	2.8 mm (0.11 in)	2.5 mm (0.10 in)	2.5 mm (0.10 in)
Venturi diameter:				
Primary	22 x 15 x 8 mm (0.87x0.59x0.31in)	22 x 15 x 8 mm (0.87x0.59x0.31in)	23 x 8 mm (0.91x0.31 in)	23 x 8 mm (0.91x0.31 in)
Secondary	28 x 15 x 8 mm (1.10x0.59x0.31in)	28 x 15 x 8 mm (1.10x0.59x0.31in)	28 x 9 mm (1.10x0.35 in)	28 x 9 mm (1.10x0.35 in)

INTAKE MANIFOLD	CANADA
DESCRIPTION	808 (1600)

INTAKE MANIFOLD

- The capacity of intake manifold hot spot has been increased to further improve the fuel vaporization at cold condition.

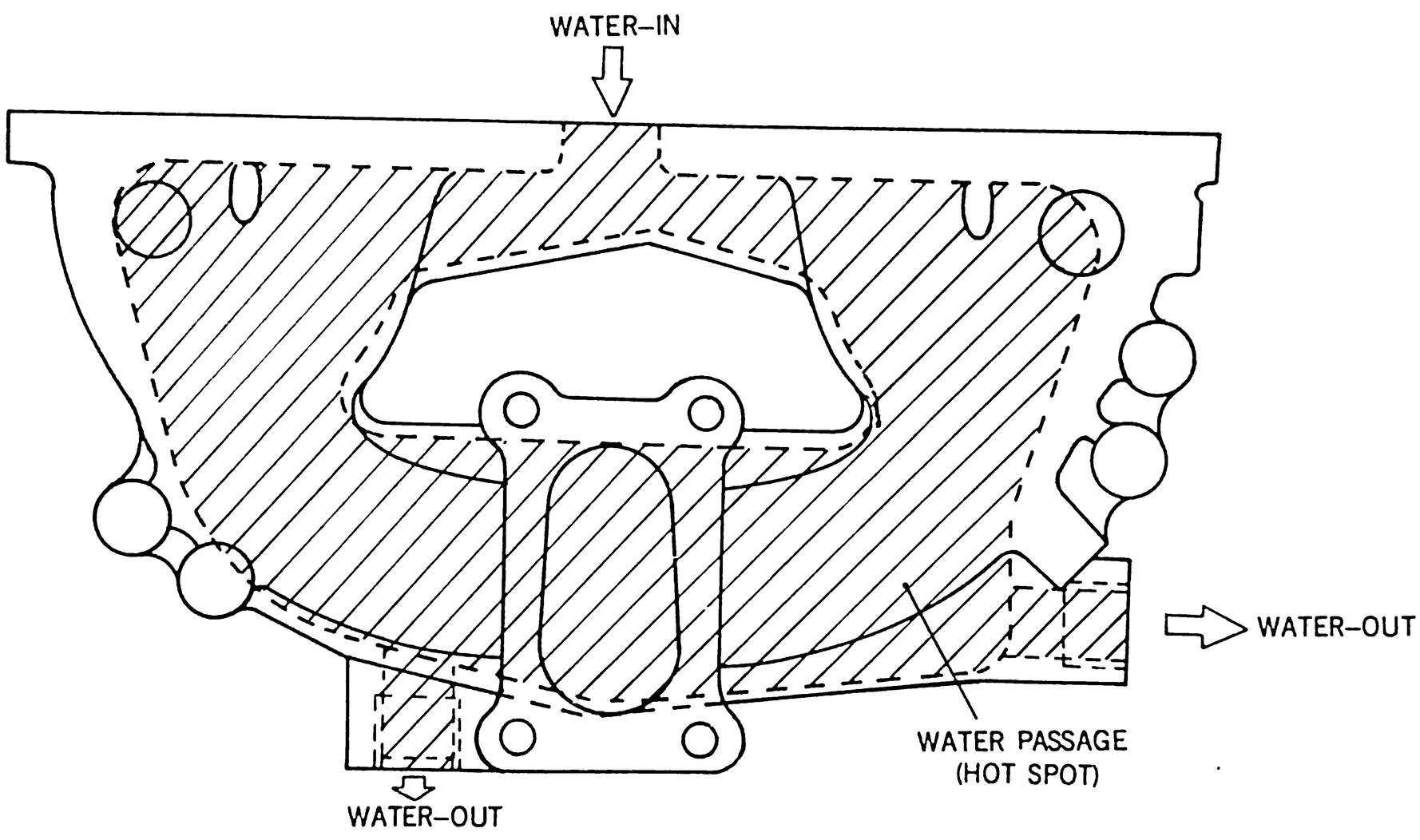

Fig. 1-15 Intake manifold hot spot

1

DUAL POINT DISTRIBUTOR IGNITION TIMING

DESCRIPTION · ADJUSTMENT

CANADA

808 (1600)

DUAL POINT DISTRIBUTOR

- The dual point distributor has been newly adopted.
  The dual point distributor retards or advances the ignition timing and the retarded ignition timing reduces the NOx.
  Refer to page 2–31 ~ 2–32.

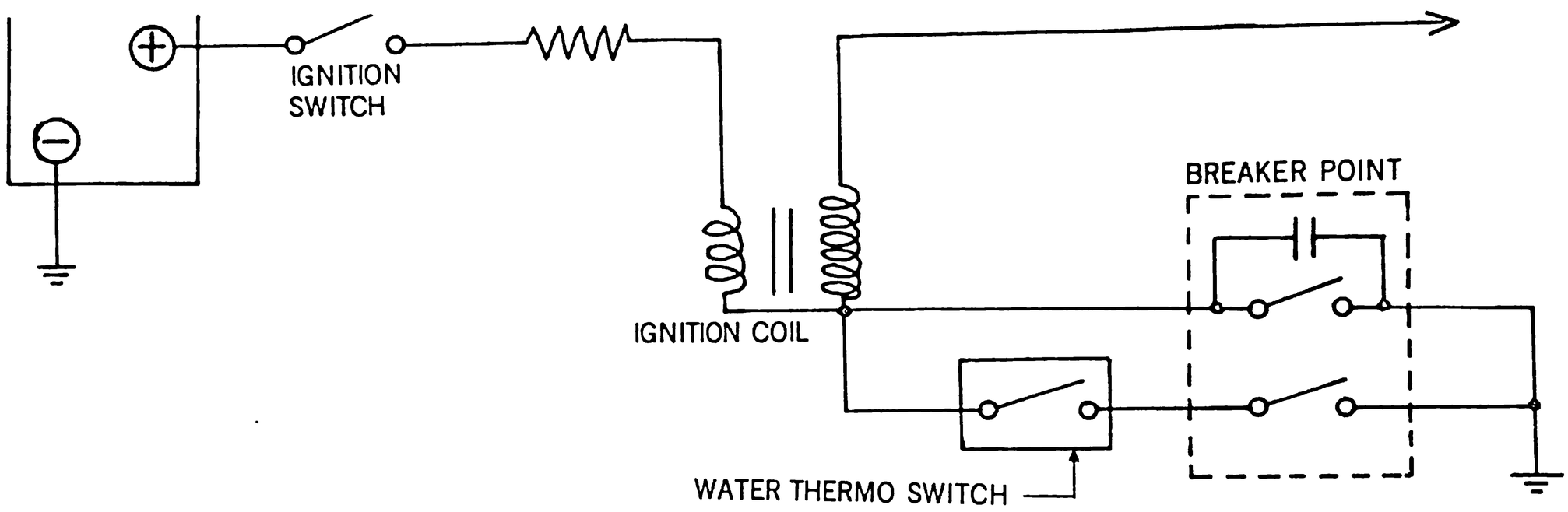

Fig. 1-16 Ignition system

IGNITION TIMING ADJUSTMENT

The adjusting procedures are as follows.

1. Warm up the engine to the normal operating temperature.

2. Disconnect the coupler connecting to the water thermo switch to operate the advance (normal) point.

3. Run the engine at specified idle speed.
   (M/T: Neutral, A/T: D–range)

4. Check the advance timing by using a timing light.

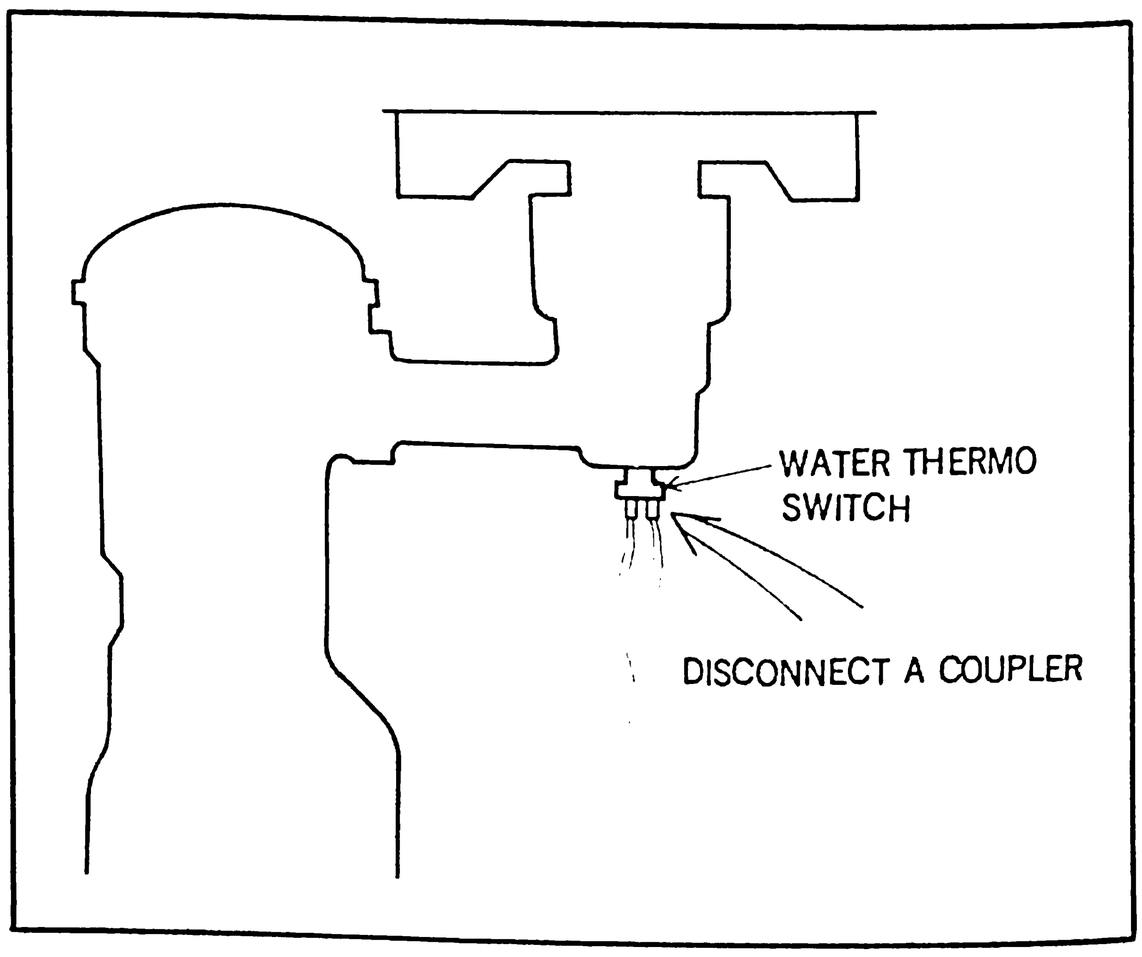

Fig. 1-17 Water thermo switch

IGNITION TIMING	CANADA
ADJUSTMENT (CONT.)	808 (1600)

5. If the timing is incorrect, lossen the distributor locking bolt and rotate the distributor housing until the correct timing is obtained.
   Then tighten the locking bolt and recheck the advance timing.

6. Reconnect the coupler.

7. Check the retard timing by using a timing light.

8. If the timing is incorrect, loosen the retard breaker plate set screws and adjust the retard timing by moving the breaker plate.
   Do Not rotate the distributor housing.

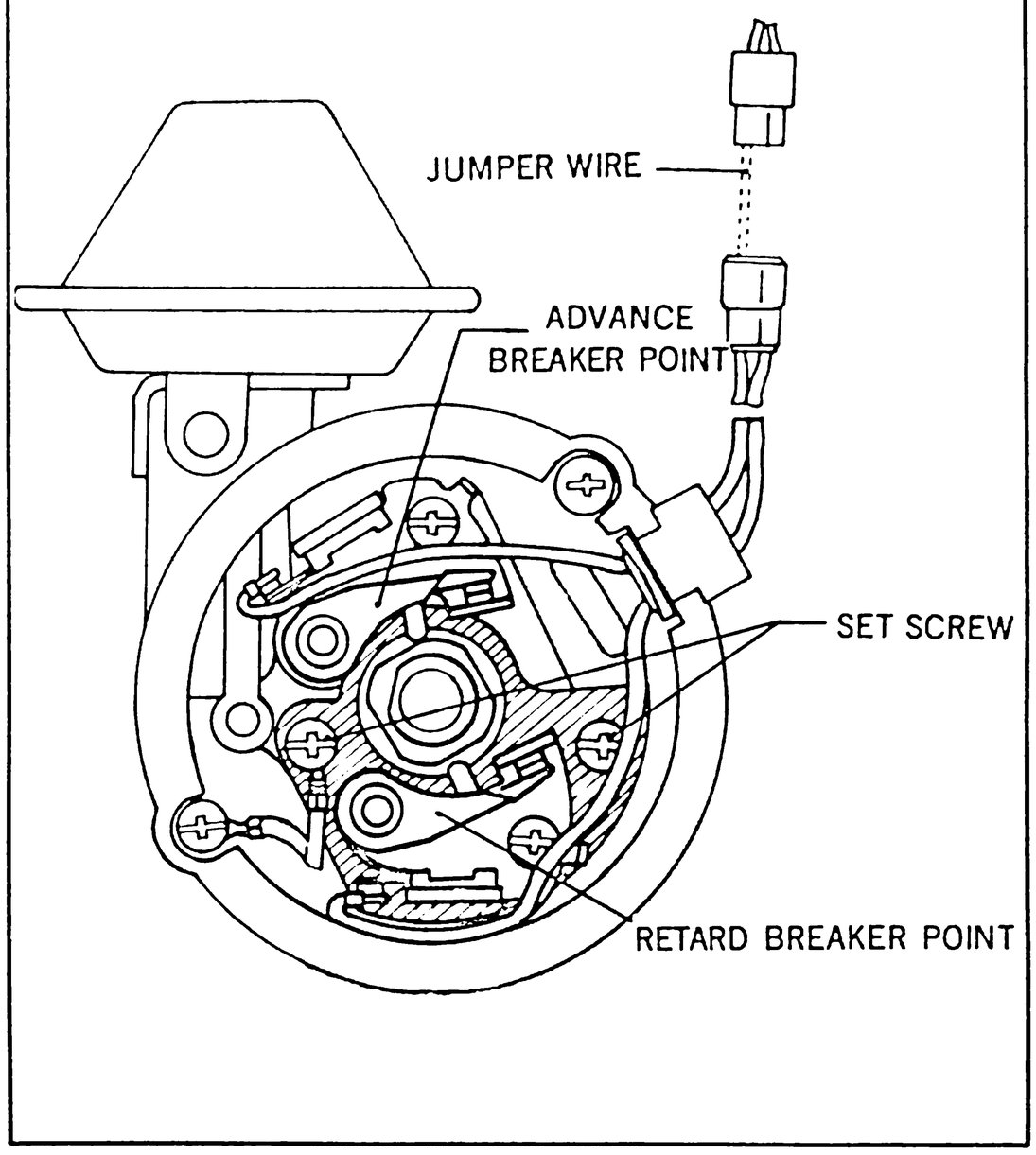

Fig. 1-18 Dual point distributor

SPECIFICATION

Advance timing	13° BTDC
Retard timing	5° BTDC

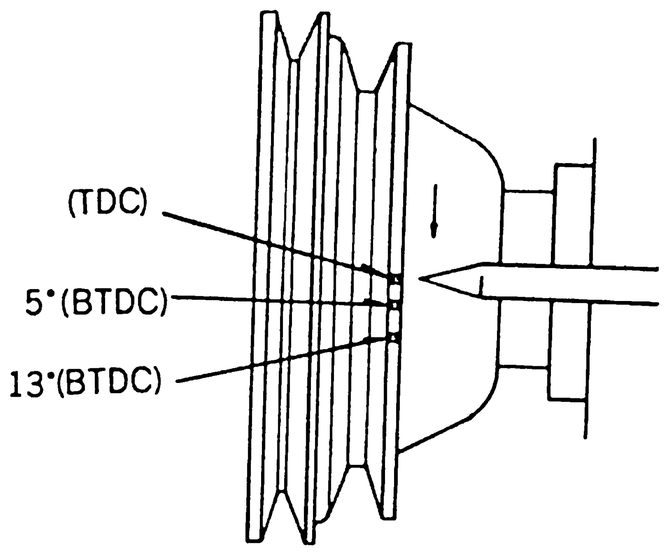

Fig. 1-19 Timing mark

EMISSION CONTROL SYSTEM

808(1300)

808(1600)

EXHAUST EMISSION STANDARD	FEDERAL · CANADA CALIFORNIA
KEY CHANGE	808 (1300) · 808 (1600)

KEY CHANGE

- The 1977 and 1976 exhaust emission standards are as shown in the table below.

For Passenger Cars (Grams/mile)

	1977 Standard			1976 Standard		
	HC	CO	NOx	HC	CO	NOx
FEDERAL	1.5	15	2.0	1.5	15	3.1
CALIFORNIA	0.41	9	1.5	0.9	9	2.0
CANADA	2.0	25	3.1	2.0	25	3.1

- As shown in the table above, 1977 Federal NOx level and California NOx and HC levels are more stringent in comparison with 1976 levels.

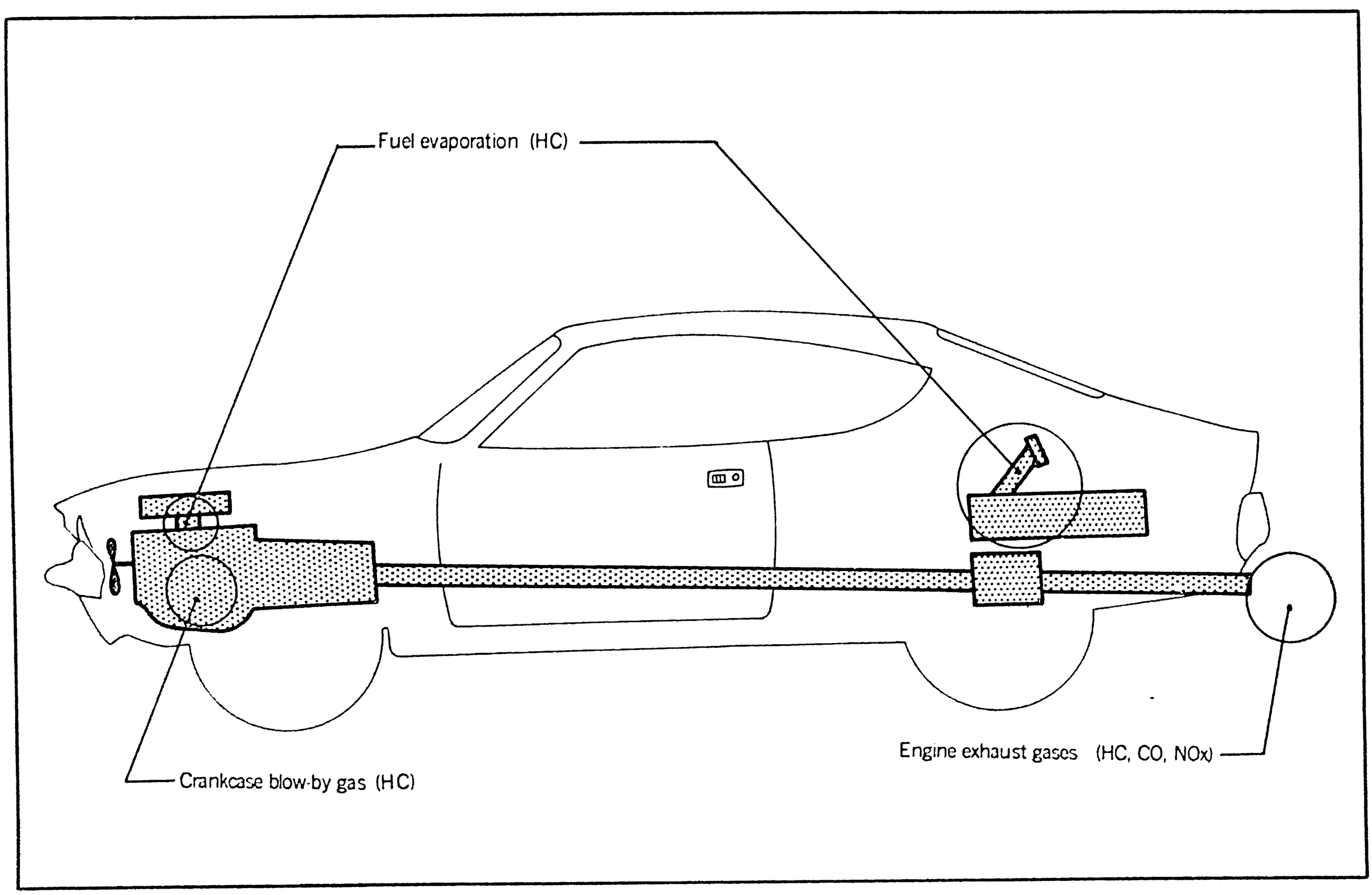

Fig. 2-1 Vehicle emissions

2

EXHAUST EMISSION CONTROL SYSTEM

KEY CHANGE

FEDERAL

308 (1500)

KEY CHANGE

- A part of exhaust emission control system has been changed to satisfy the 1977 requirement for Federal and to improve the fuel consumption, as shown in the followng table.

ITEM	1977 MODEL	1976 MODEL	REF. PAGE
1. DECELERATION CONTROL SYSTEM	◎	◎	2–4 ~
① Throttle opener (Servo diaphragm, Vacuum control valve)	◎	◎	2–5
② Anti-afterburn valve	o	—	
2. IGNITION CONTROL SYSTEM	o	—	2–6 ~
① Accelerator switch	o	—	2–8
② Top switch	o	—	
3. AIR INJECTION AND CATALYTIC CONVERTER SYSTEM	o	*	
① Reed valve	o	—	
② Air manifold	o	—	2–9 ~
③ Air injection nozzle	o	—	2–11
④ Air silencer	o	—	
⑤ Catalytic converter	◎	◎	
4. HEAT HAZARD WARNING SYSTEM	o	—	2–12 ~
① Heat hazard sensor	o	—	2–13
② Warning lamp	o	—	
5. EGR MAINTENANCE WARNING SYSTEM	X	○	
① Maintenance interval detector	X	○	
② Reset switch	X	○	
③ Warning lamp	X	○	
6. CATALYTIC CONVERTER WARNING SYSTEM	X	○	
① Heat hazard sensor	X	○	
② Warning lamp	X	○	

o marked: Newly equipped for 1977 model

X marked: Abolished from 1977 model

◎ marked: Equipped for both 1977 and 1976 models (1977 same as 1976)

○ marked: Equipped for 1976 model

– marked: Not equipped for 1976 model

* marked: Without air injection system
(Only with catalytic converter)

EXHAUST EMISSION CONTROL SYSTEM	FEDERAL
KEY CHANGE (CONT.)	808 (1300)

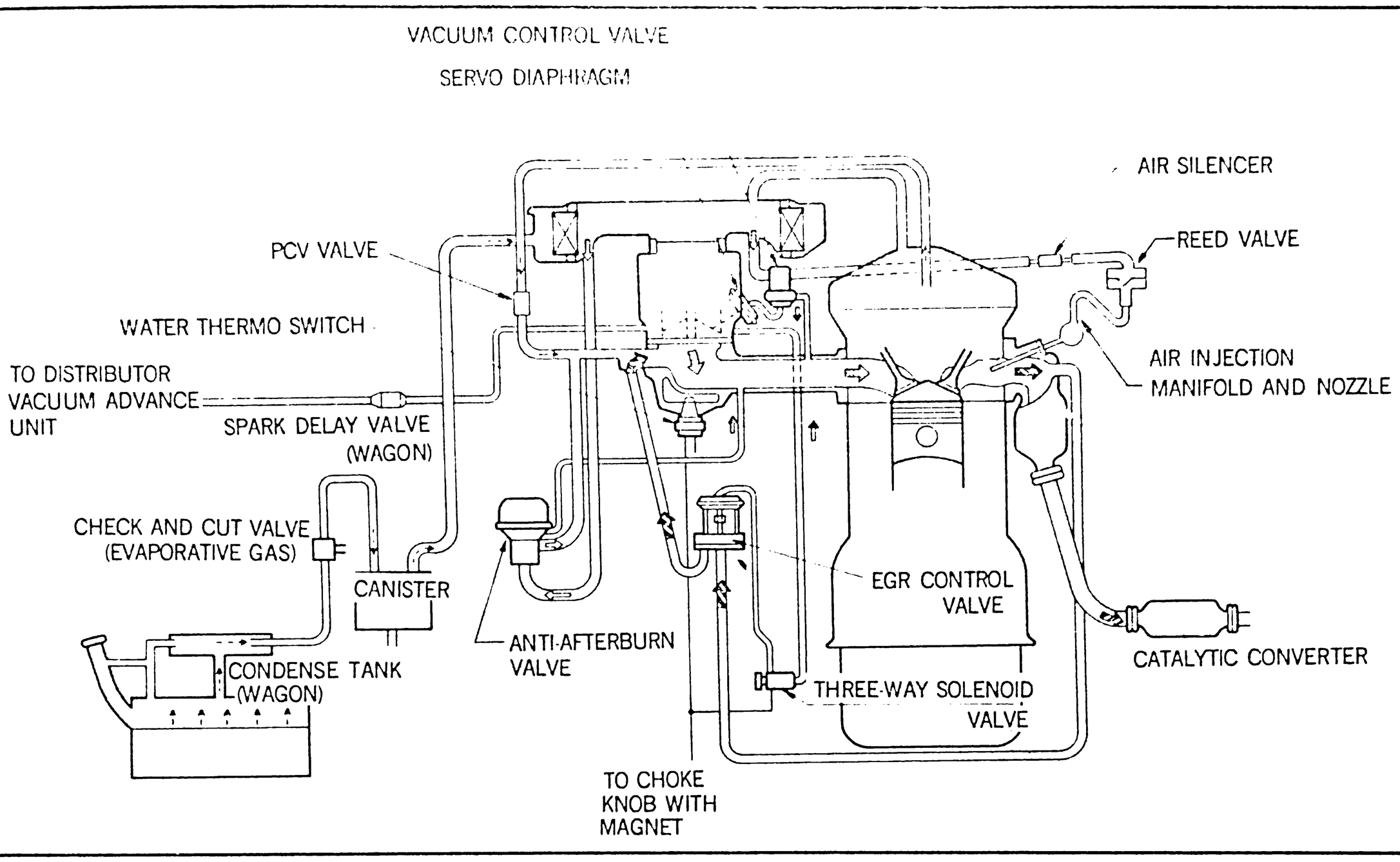

Fig. 2-2 1977 Emission control system

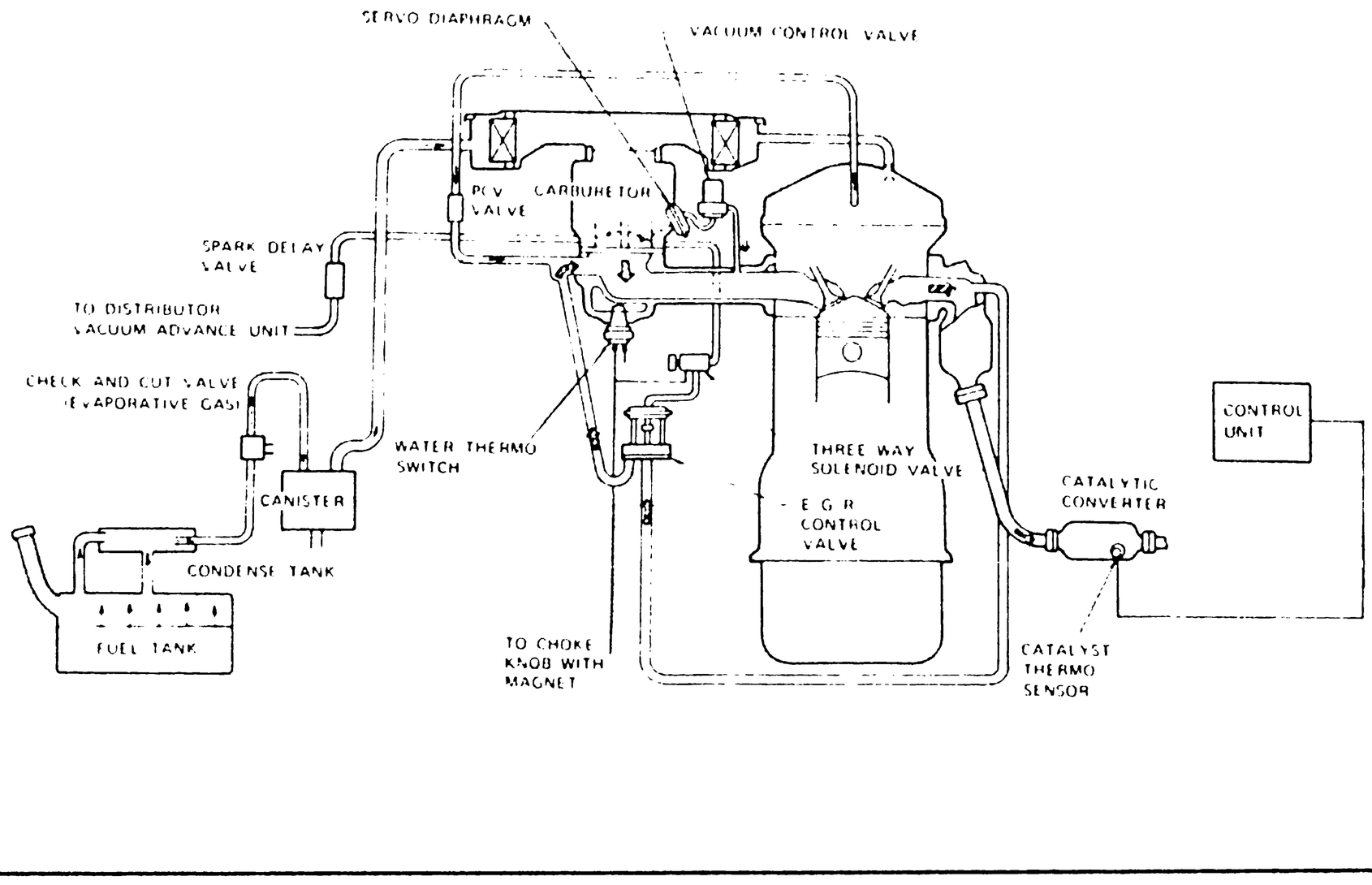

Fig. 2-3 1976 Emission control system

DECELERATION CONTROL SYSTEM

DESCRIPTION

FEDERAL

808 (1300)

DESCRIPTION

The deceleration control system is designed to maintain a balanced air-fuel mixture during deceleration. The system make use of an anti-afterburn valve to prevent fuel detonation (afterburn) in the exhaust system and a throttle opener to compensate the lean (insufficient) air-fuel mixture.

The anti-afterburn valve allows the fresh air from the air cleaner to flow into the intake manifold for preventing the abnormal combustion or afterburn in the exhaust system.

The throttle opener (servo diaphragm and vacuum control valve) is same as 1976 model.

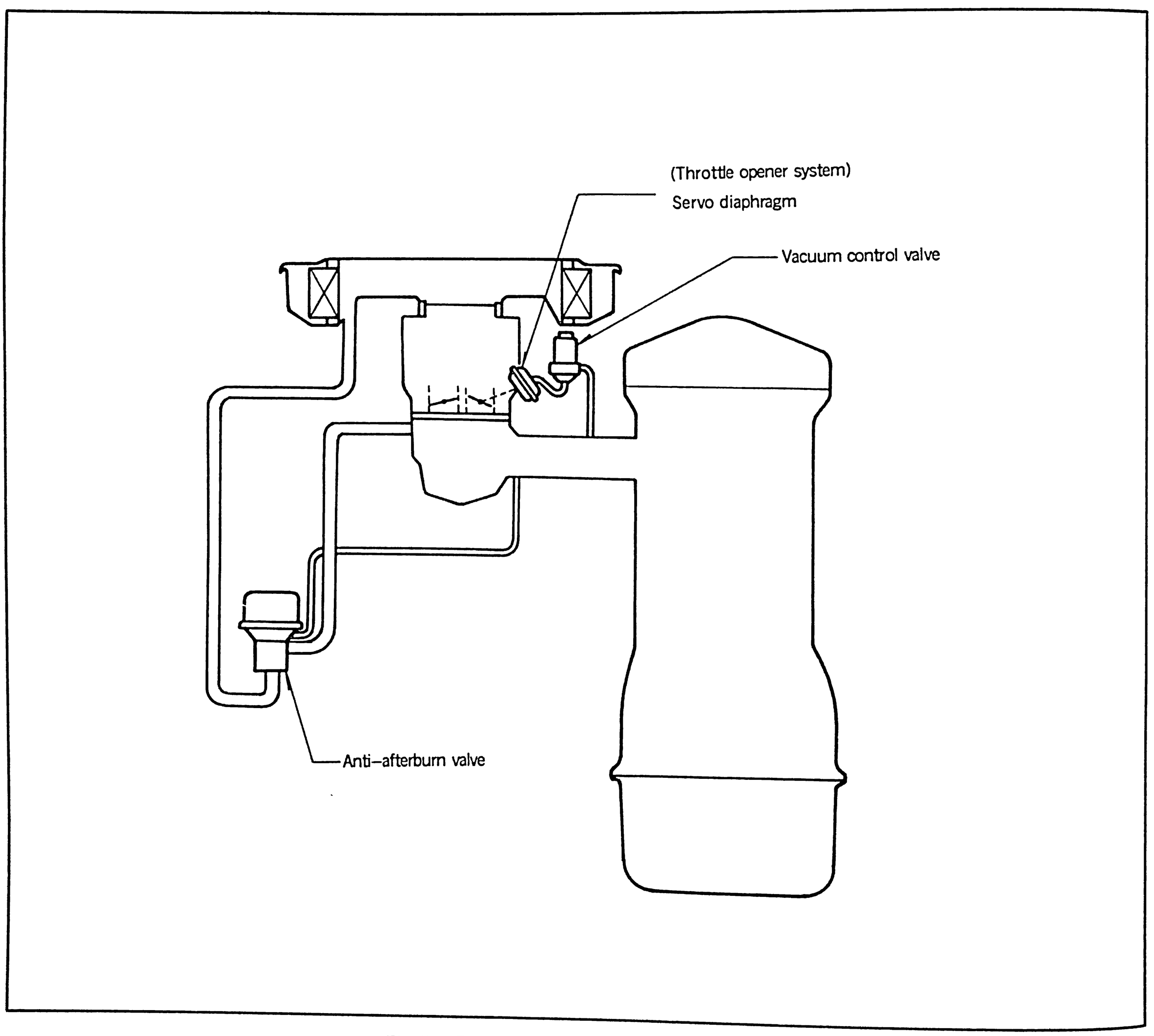

Fig. 2-4 Deceleration control system

DECELERATION CONTROL SYSTEM

CHECKING
TROUBLE SYMPTOM, CAUSE & REPAIR

FEDERAL

808 (1300)

CHECKING ANTI-AFTERBURN VALVE

1. Disconnect the inlet hose (anti-afterburn valve~air cleaner)at the air cleaner.
2. Run the engine at idle. Close the inlet hose with finger. There should be no difference in engine speeds.
3. Hold a finger over the inlet hose and raise the engine speed and quickly release the accelerator. Air should be sucked in for a few seconds. If the valve passes air for longer than three seconds or does not pass air at all, replace the valve.

NOTE:

Service procedures of throttle opener (servo diaphragm, vacuum control valve) are same as 1976 model.

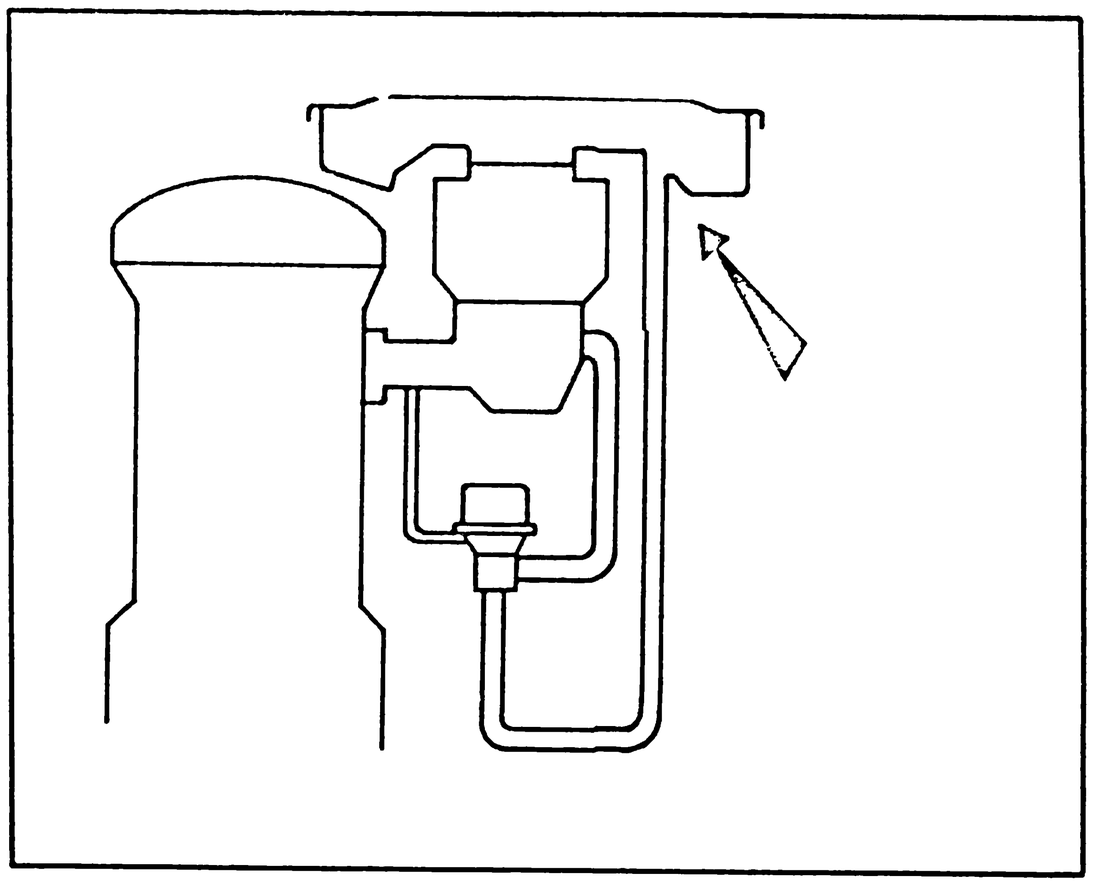

Fig. 2-5 Checking anti-afterburn valve

TROUBLE SYMPTOM, CAUSE & REPAIR

TROUBLE SYMPTOM	POSSIBLE CAUSE	REPAIR
• Afterburn	• Anti-afterburn valve is stuck closed.	• Replace
• Idle rough and stalls • Surges • Hesitates on acceleration	• Anti-afterburn valve is stuck opened.	• Replace

IGNITION CONTROL SYSTEM	FEDERAL
DESCRIPTION	808 (1300)

DESCRIPTION

The ignition control system retards or advances the ignition timing under the conditions shown in the following table. The retarded ignition timing reduces the NOx.

This system consists of a top switch, acccelerator switch and transistorized ignition system (ignitor and distributor).

OPERATING CONDITION

TIMING	DRIVING CONDITION	SWITCH CONDITION
Retard (Both switches are ON.)	① Accelerator pedal stroke within 0 (idle position) ~ depressed 3/4 stroke ② Gearshift lever position 1st, 2nd, 3rd and Rev.	Accelerator switch: ON Top switch: ON
Normal (Advance)	Except above condition	Accelerator switch: OFF Top switch: OFF

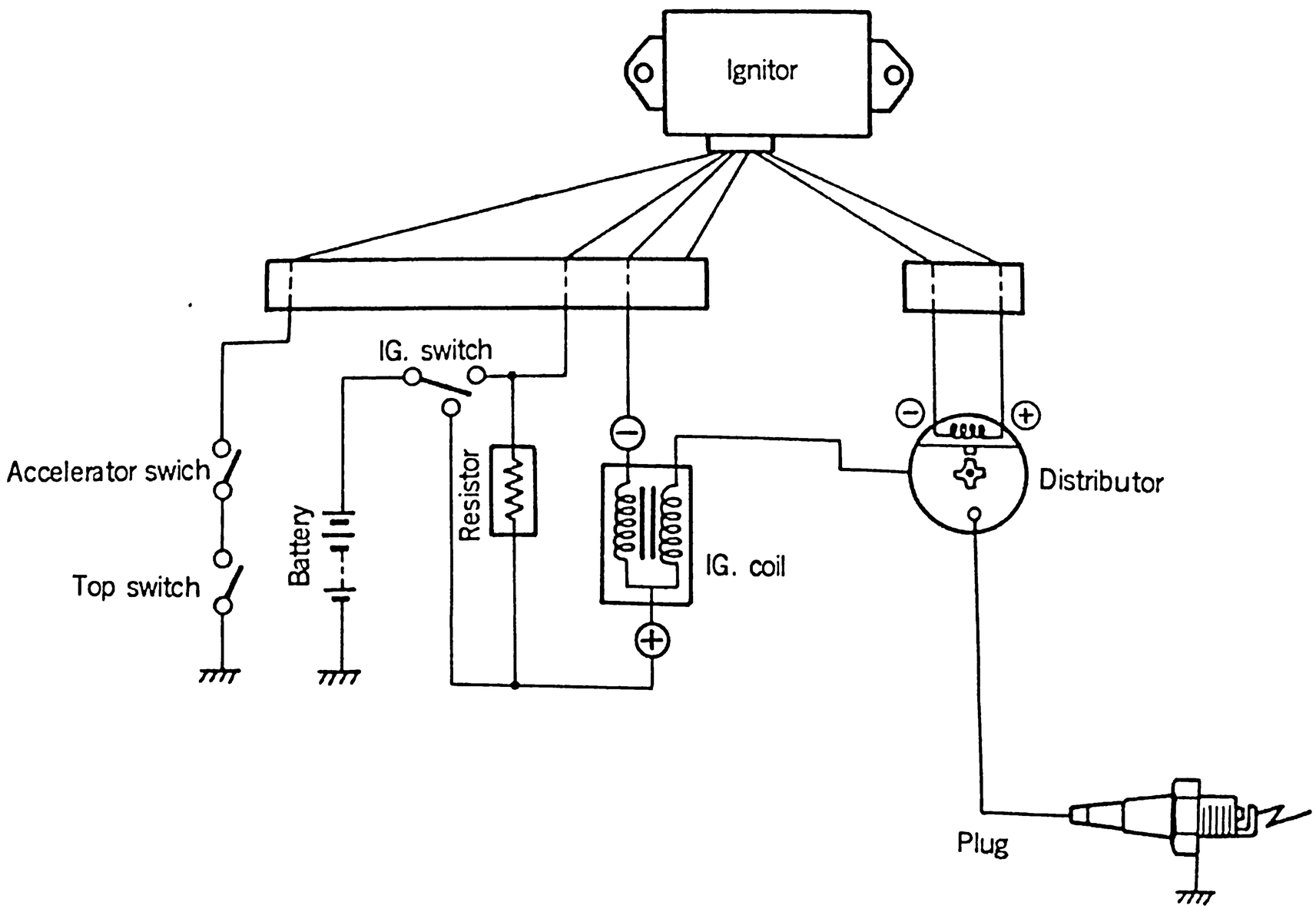

Fig. 2-6 Ignition control system

IGNITION CONTROL SYSTEM

CHECKING · ADJUSTMENT

FEDERAL

808 (1300)

CHECKING ACCELERATOR SWITCH

1. Disconnect the couplers from the accelerator switch.
2. Connect an ohmmeter to the switch terminals.
3. Depress the accelerator pedal slowly and check to see that the ohmmeter should not show any continuity when the pedal is depressed more than 3/4 stroke.

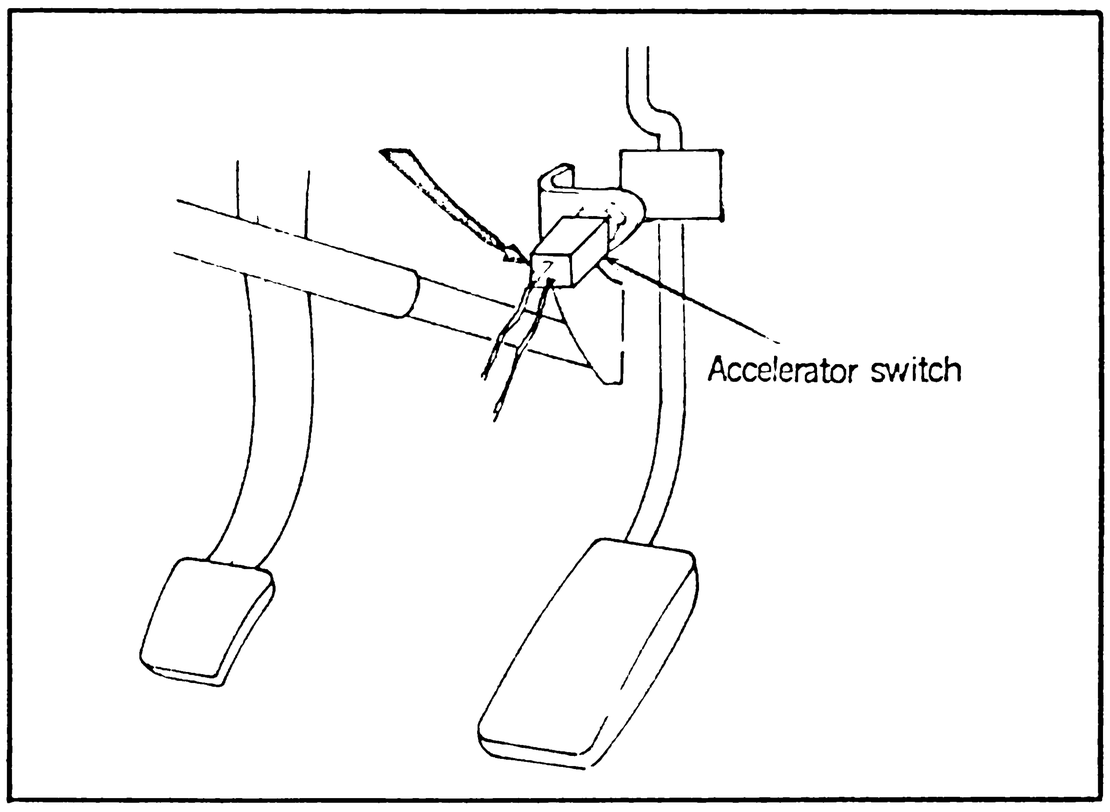

Fig. 2-7 Checking accelerator switch

ADJUSTING ACCELERATOR SWITCH

1. Loosen the lock nut on the accelerator switch.
2. Fully depress the accelerator pedal.
3. Screw the switch in or out until the switch flange just contacts the switch plate on the pedal rod.
4. Then screw out the switch by 1/2 turn from above condition (Step-3) and tighten the lock nut securely.

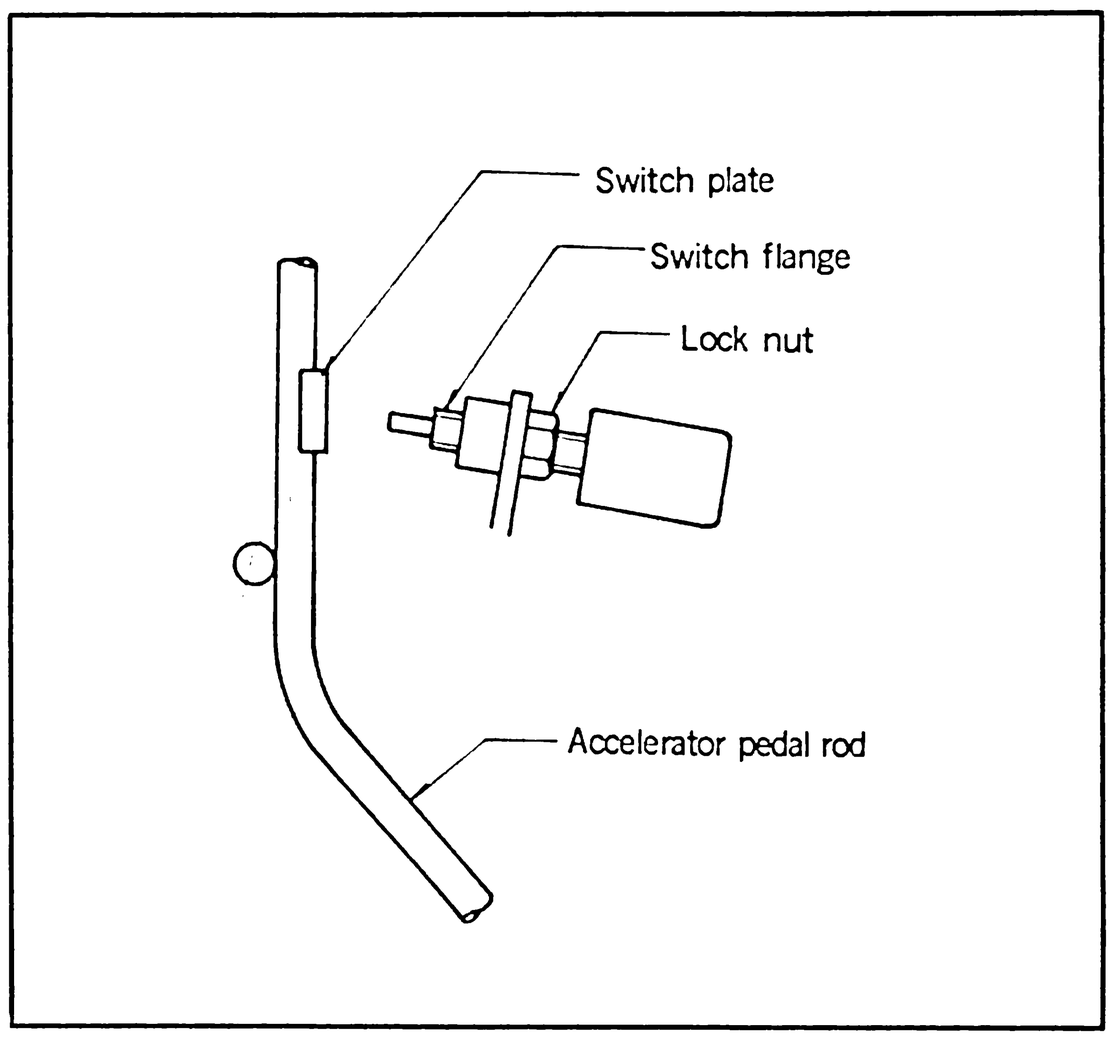

Fig. 2-8 Adjusting accelerator switch (1)

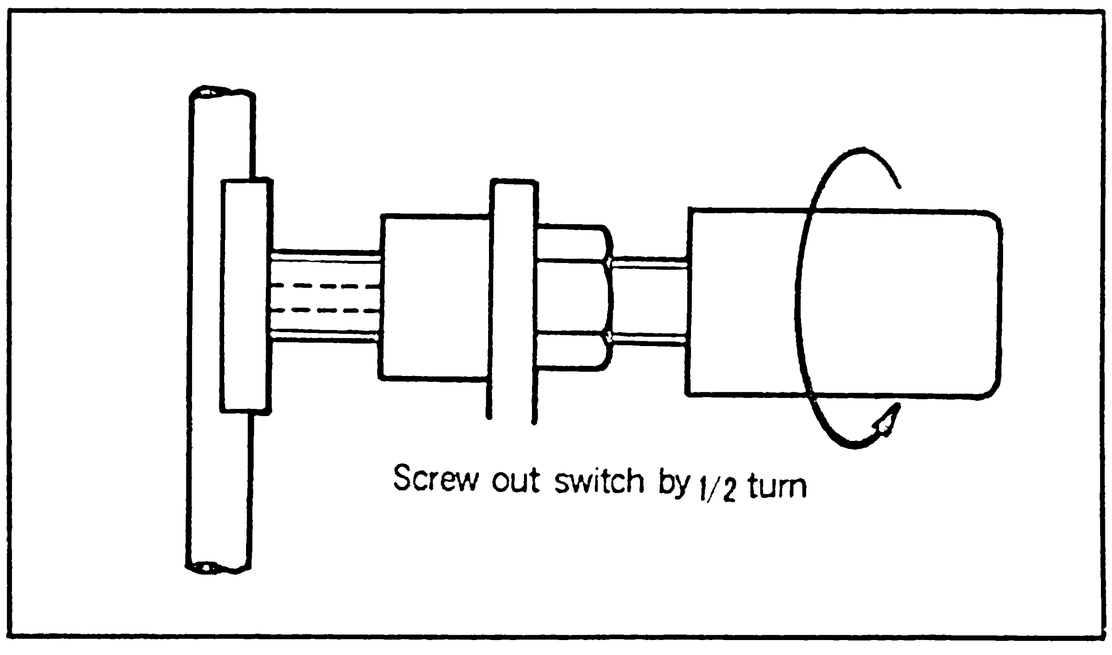

Fig. 2-9 Adjusting accelerator switch (2)

IGNITION CONTROL SYSTEM

CHECKING
TROUBLE SYMPTOM, CAUSE & REPAIR

FEDERAL

808 (1300)

CHECKING TOP SWITCH

1. Disconnect the coupler for the top switch located at the right of the rear of the engine.
2. Connect an ohmmeter to the terminals in the coupler. (Top switch side)
3. Position the gearshift lever into 3rd and make sure the continuity exists.
4. Position the lever into top (4th) and make sure the continuity does not exist.

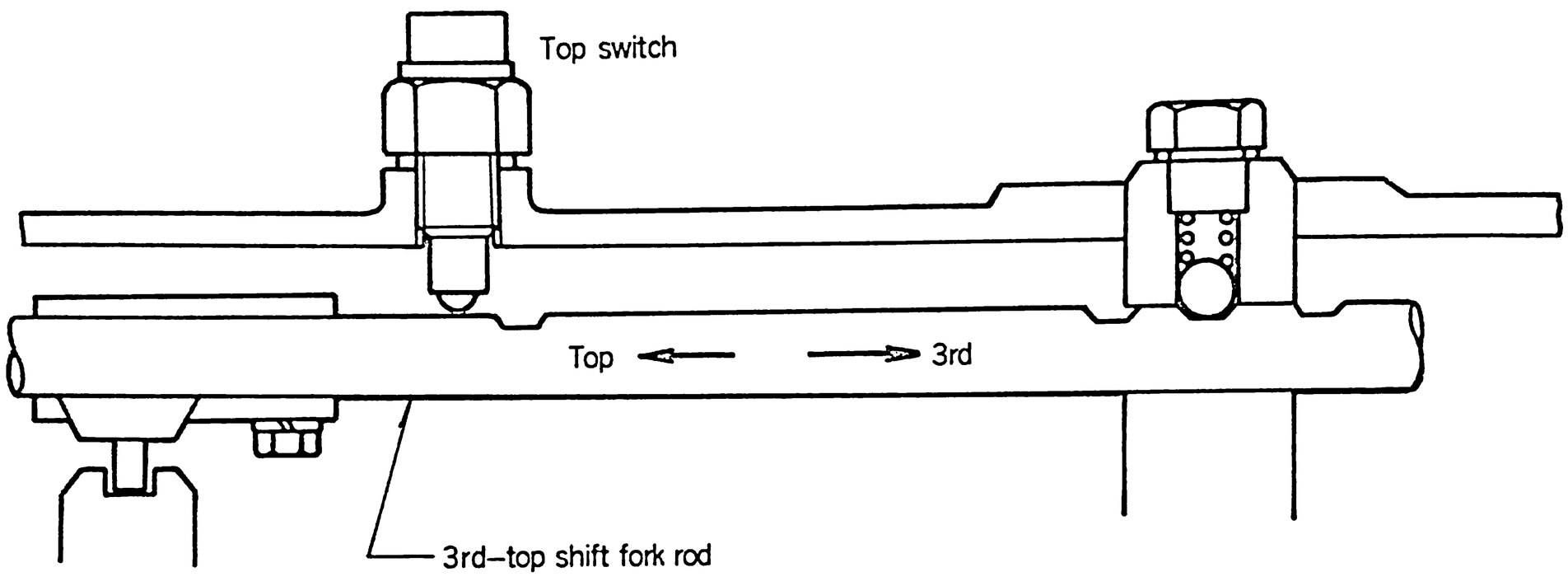

Fig. 2-10 Checking top switch

TROUBLE SYMPTOM, CAUSE & REPAIR

TROUBLE SYMPTOM	POSSIBLE CAUSE	REPAIR
• Lack of power	• Defective accelerator switch • Defective top switch	• Replace • Replace
• Much NOx and HC	• Defective accelerator switch • Defective top switch	• Replace • Replace

AIR INJECTION AND CATALYTIC CONVERTER (AI AND CCo) SYSTEM

DESCRIPTION

FEDERAL

808 (1300)

DESCRIPTION

This system serves to induct the air into the hot gases discharged from the cylinder head exhaust port for the purpose of reburning the unburnt HC and CO, and to convert the HC and CO contained in the exhaust gases into water (H_2O) and carbon dioxide (CO_2).

This system consists of a reed valve, air manifold, air injection nozzle, air silencer and catalytic converter.

The reed valve is operated by utilizing exhaust gas pulsation to induct the air from the air cleaner into the cylinder head exhaust port.

The air manifold divides the air inducted from the reed valve into each air injection nozzle (one for each cylinder).

Each air injection nozzle injects the air into the hot gases discharged from the cylinder head exhaust port.

The air silencer insulates the noise caused by the operation of reed valve.

The catalytic converter converts the HC and CO contained in the exhaust gases into water (H_2O) and carbon dioxide (CO_2).

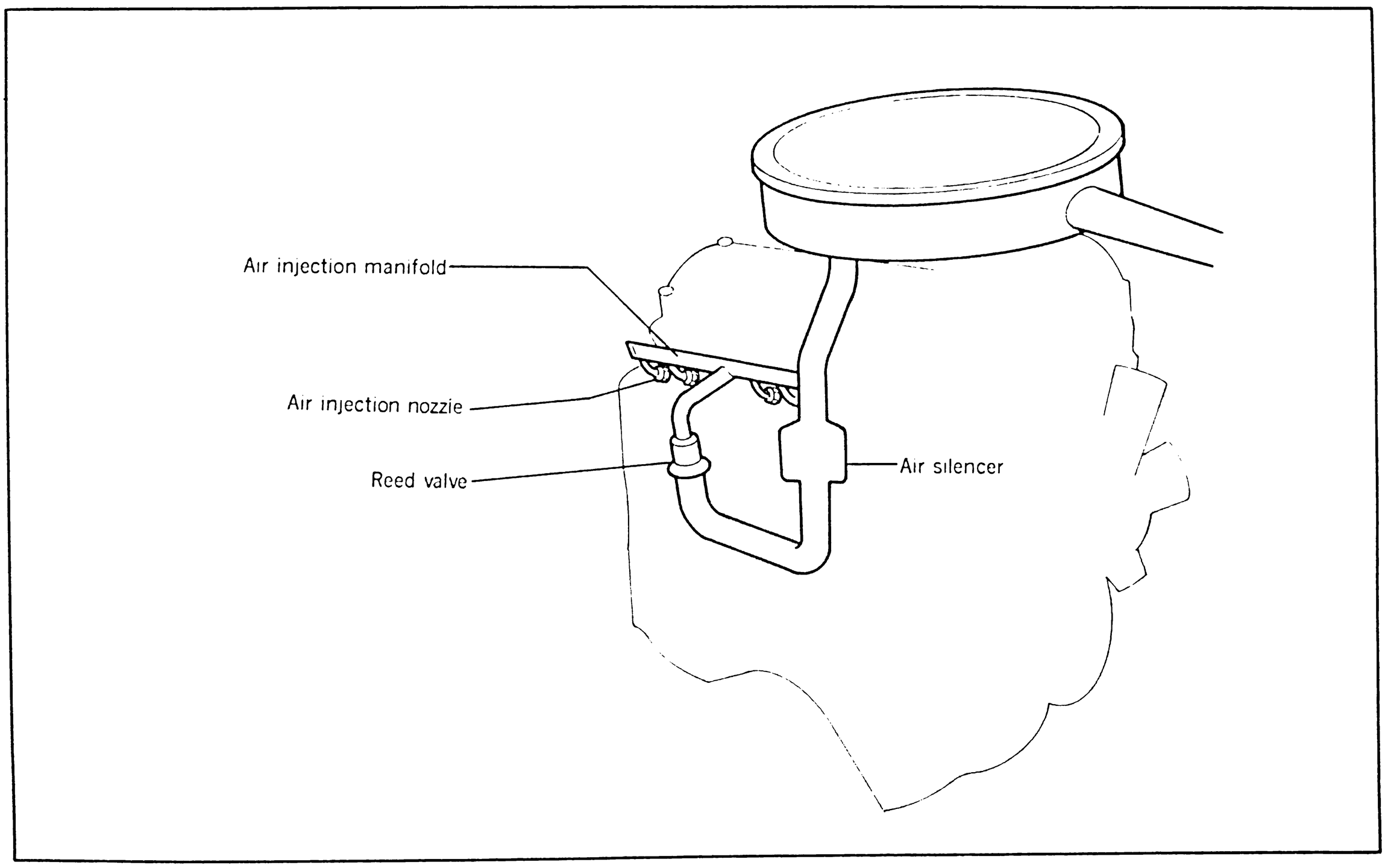

Fig. 2-11 Air injection and catalytic converter system

AIR INJECTION AND CATALYTIC CONVERTER (AI AND CCo) SYSTEM

CHECKING

FEDERAL

808 (1300)

CHECKING REED VALVE

1. Warm up the engine until it reaches normal operating temperature.
2. Disconnect the air hose from the reed valve.
3. Start the engine and run it at idle.
   Place the finger over the reed valve inlet and make sure the air is sucked into the valve.
4. Increase the engine speed to 1,500 rpm and check the exhaust gas leakage at the air inlet fitting on the valve by placing a finger.

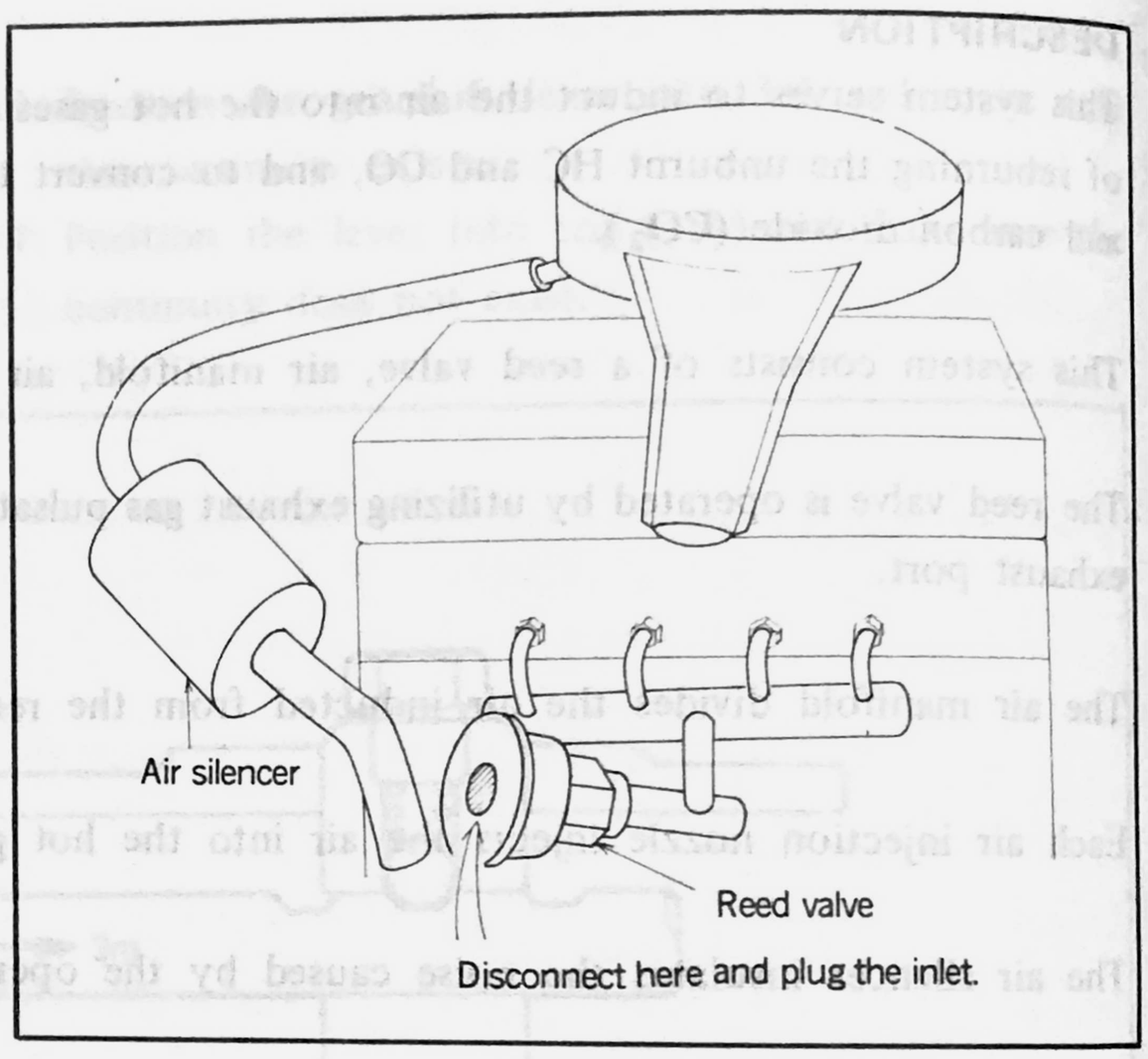

Fig. 2-12 Checking reed valve

CHECKING AIR SILENCER

Check for any cracking on the silencer.
Replace the silencer, if necessary.

CHECKING CATALYTIC CONVERTER

Check the catalyst for burned condition, cracks and corrosion.

PRECAUTION ON HANDLING

To avoid overheating the exhaust system and to maintain proper performance of catalytic converter, the following precautions should be taken:

1. **UNLEADED FUEL** must be used.
2. **DO NOT** park the car over or near inflammable objects such as dry grass.
3. **DO NOT** operate the engine with the spark plug wire(s) disconnected.
4. **DO NOT** coast the vehicle with the ignition switch turned off and avoid severe engine braking unless necessary.
5. **AVOID** driving with the choke control knob fully pulled out when the engine has warmed up.
6. **AVOID** the fuel tank from becoming empty.

AIR INJECTION AND CATALYTIC CONVERTER (AI AND CCo) SYSTEM
TROUBLE SYMPTOM, CAUSE & REPAIR

FEDERAL

808 (1300)

TROUBLE SYMPTOM, CAUSE & REPAIR

TROUBLE SYMPTOM	POSSIBLE CAUSE	REPAIR
• High idle CO and HC	• Defective reed valve • Air hose leaking	• Replace • Repair or replace
• Noisy system	• Air hose leaking • Broken air silencer	• Repair or replace

2

HEAT HAZARD WARNING SYSTEM	FEDERAL	CALIFORNIA
DESCRIPTION · OPERATION	808 (1300)	808 (1300) 808 (1600)

DESCRIPTION

The heat hazard warning system is employed to prevent potential heat hazard to the vehicle due to excessive heat radiation from the exhaust system.

The warning device test system is provided to determine whether the warning lamp is in order or not. If the warning lamp is in order, it comes on when the ignition switch is turned on and should go off after the engine has been started.

OPERATION

When the floor temperature is more than *212°F, the heat hazard sensor becomes operative (on) and heat hazard warning lamp on the instrument panel lights up. (*302°F for 808 1600)

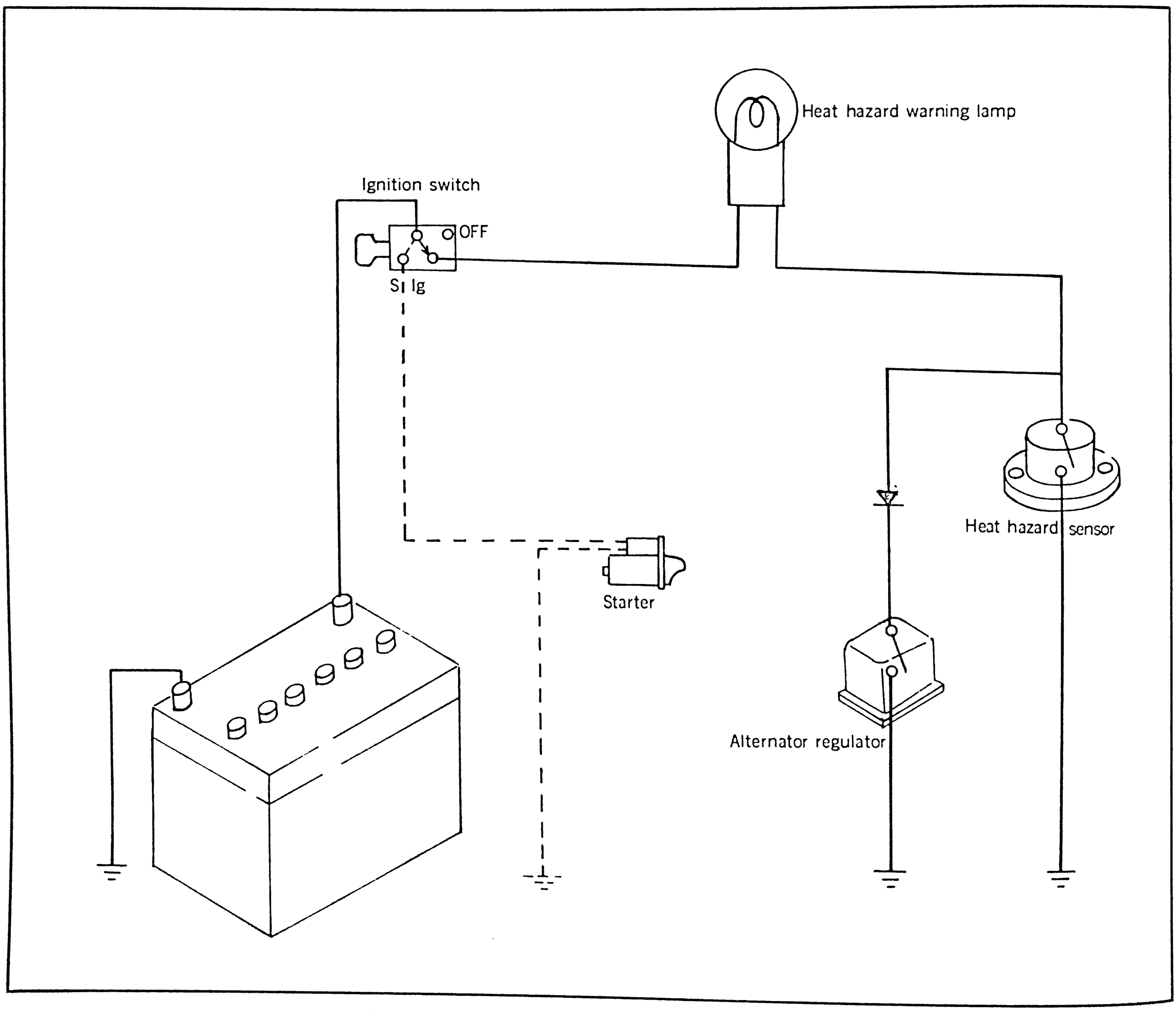

Fig. 2-13 Heat hazard warning system

HEAT HAZARD WARNING SYSTEM	FEDERAL	CALIFORNIA
CHECKING	808 (1300)	808 (1300) 808 (1600)

CHECKING HEAT HAZARD WARNING LAMP

Check to see that the heat hazard warning lamp comes on when the ignition switch is turned on and the lamp goes off when the engine is started.

CHECKING HEAT HAZARD SENSOR

1. Remove the heat hazard sensor.
2. Attach the test lamp to the sensor and wrap the sensor together with the thermometer in aluminum foil to prevent oil ingress.
3. Submerge the wrapped sensor into oil and gradually heat the oil. Measure the temperature when the lamp comes on. The reading should be 212 ± 9°F for 808 (1300) and 302 ± 9°F for 808 (1600). If the reading is not within the specification, replace the sensor.

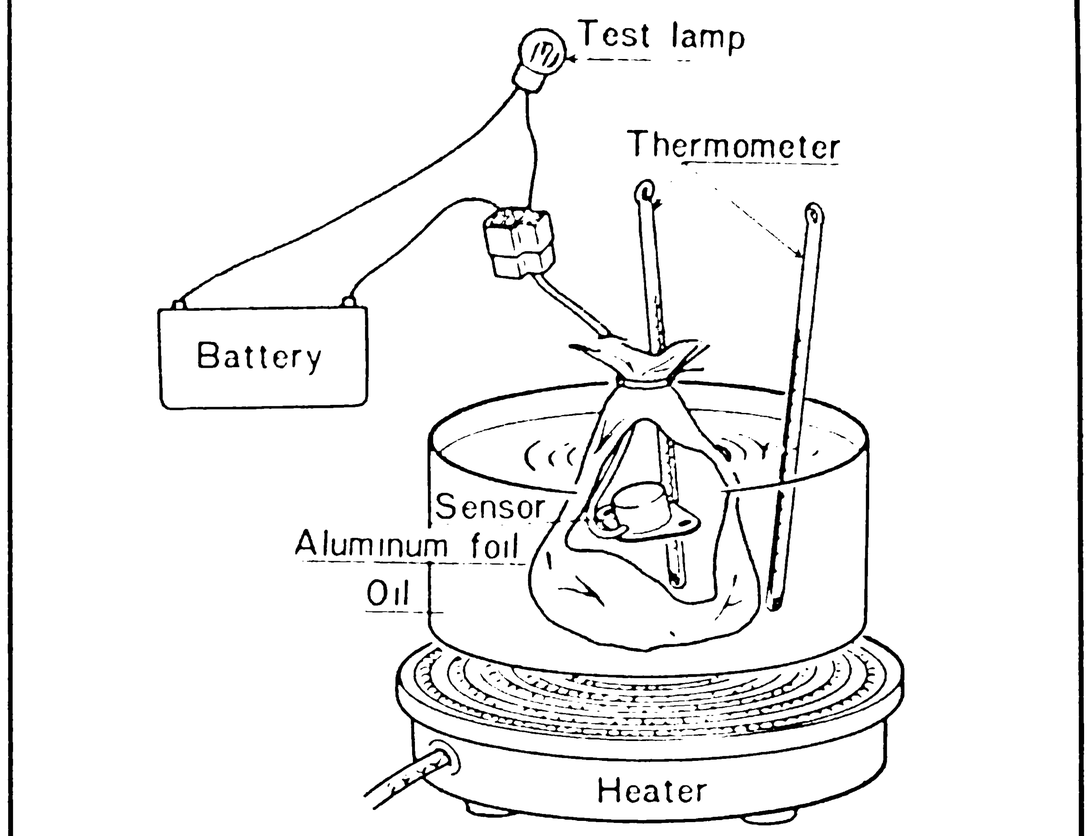

Fig. 2-14 Checking heat hazard sensor

NOTE:

Avoid heating oil more than 280°F for 808 (1300) and 424°F for 808 (1600).

2

EXHAUST EMISSION CONTROL SYSTEM	FEDERAL
KEY CHANGE	808 (1600)

KEY CHANGE

- A part of the exhaust emission control system has been changed to satisfy the 1977 requirement for Federal and to improve the fuel consumption. Details are as follows.

ITEM	1977 MODEL	1976 MODEL	REF. PAGE
1. IGNITION CONTROL SYSTEM	o	—	2–15 ~ 2–16
1 Vehicle speed switch	o	—	
2 Dual point distributor	o	—	

● marked: Newly equipped for 1977 model

– marked: Not equipped for 1976 model

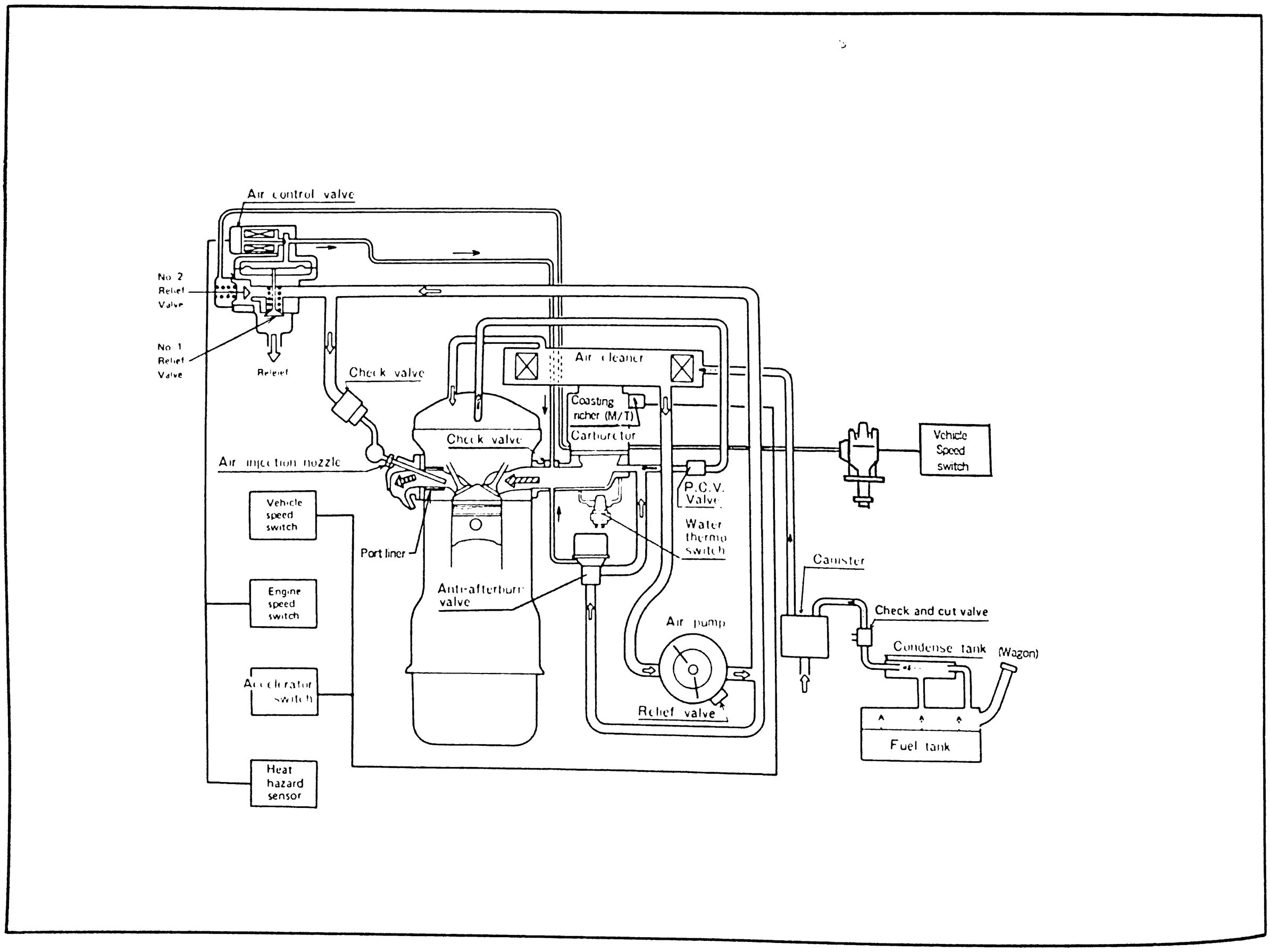

Fig. 2-15 1977 Emission control system

IGNITION CONTROL SYSTEM	FEDERAL
DESCRIPTION	808 (1600)

DESCRIPTION

The ignition control system retards or advances the ignition timing under the conditions shown in the following table. The retarded ignition timing reduces the NOx.

The system consists of the dual point distributor and vehicle speed switch. The dual point distributer has normal contact point and retarded point. The vehicle speed switch detects the vehicle speed.

OPERATING CONDITION:

TIMING	VEHICLE SPEED SWITCH	RUNNING CONDITION
Retard	ON	When vehicle speed is lower than 42 miles/H (64 km/H)
Normal (Advance)	OFF	When vehicle speed is higher than 42 miles/H (64 km/H)

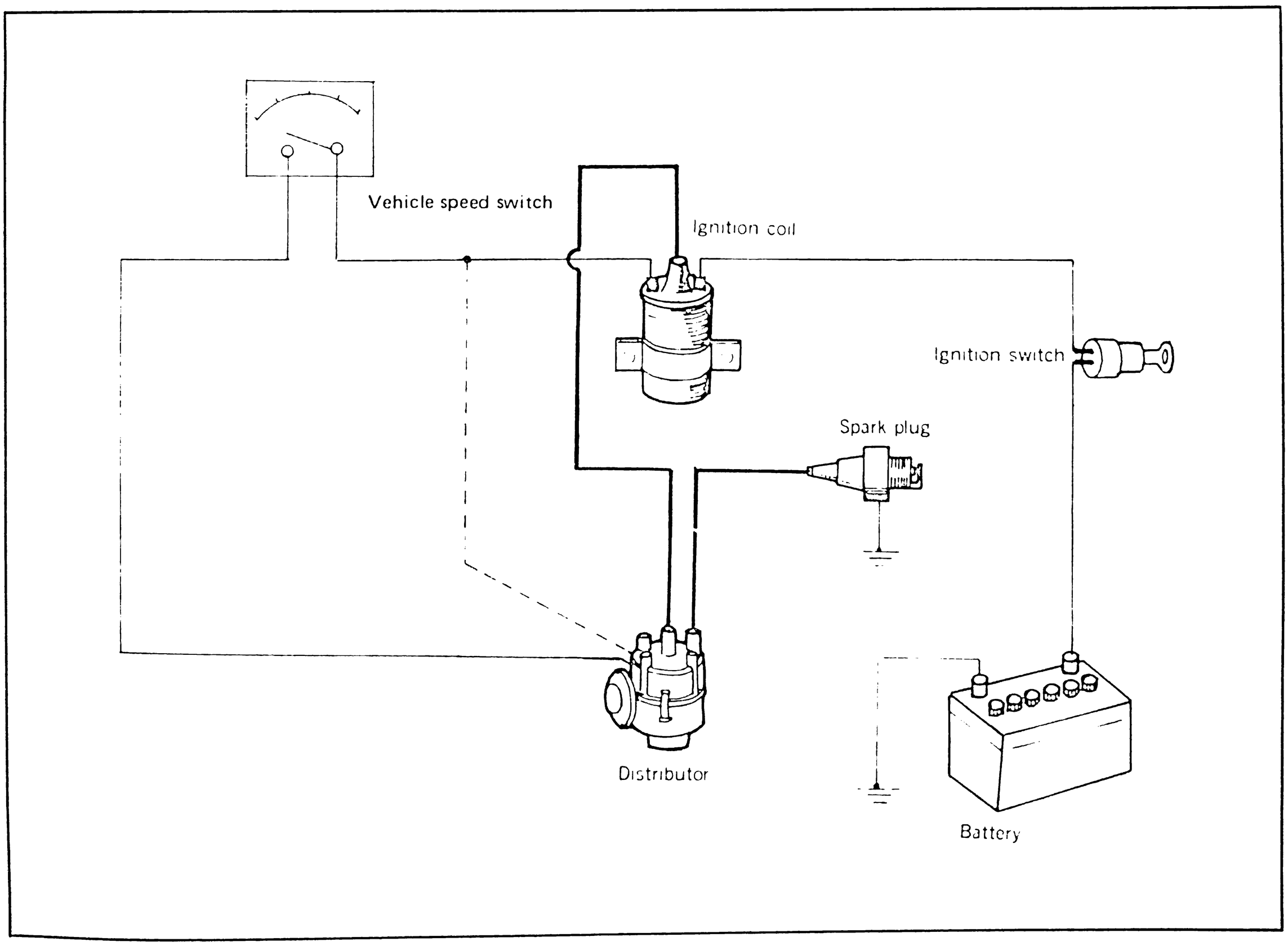

Fig. 2-16 Ignition control system

IGNITION CONTROL SYSTEM

CHECKING
TROUBLE SYMPTOM, CAUSE & REPAIR

FEDERAL

808 (1600)

CHECKING VEHICLE SPEED SWITCH

The checking of speed switch should be done with a circuit tester in the manner as mentioned below while driving the vehicle.

1. Depress the accelerator pedal to increase the vehicle speed and make sure the speed switch is continuously off at speeds of over 42 miles/H.
2. Release the accelerator pedal to decrease the vehicle speed and confirm that the speed switch continuous to be on at speed of under 42 miles/H.

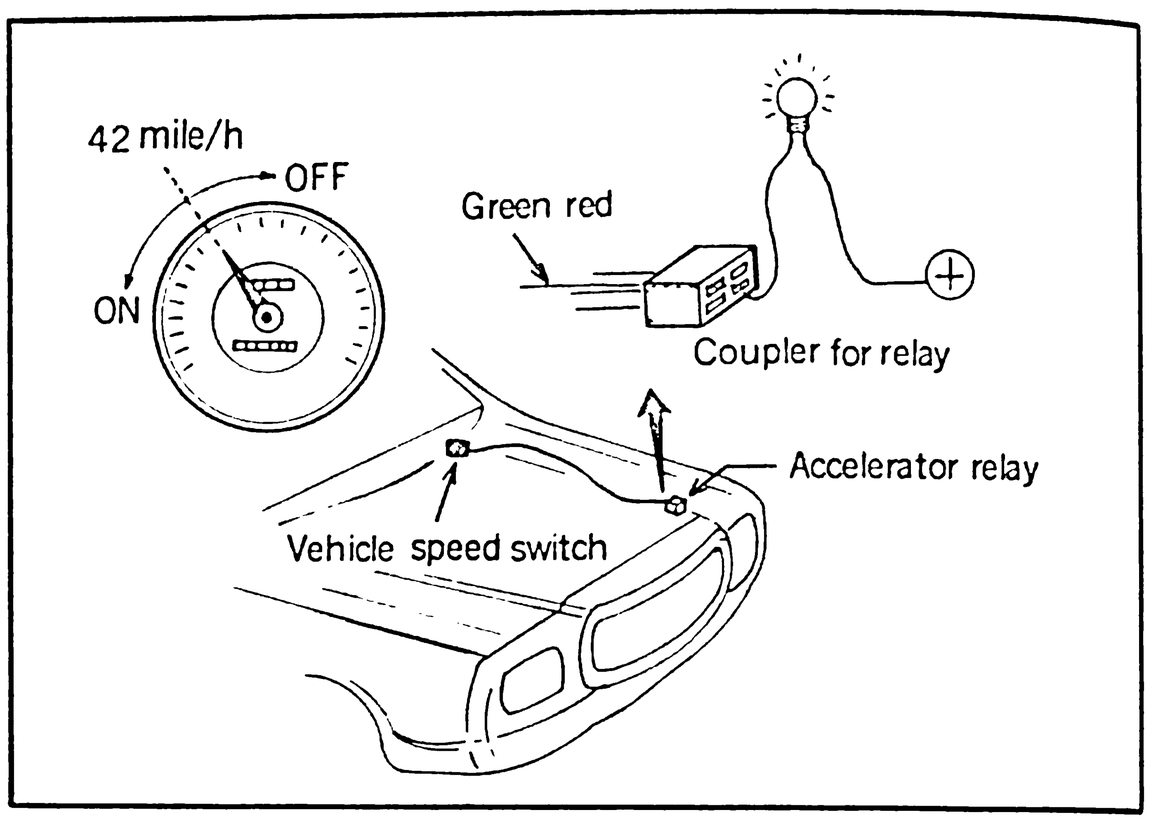

Fig. 2-17 Checking vehicle speed switch

TROUBLE SYMPTOM, CAUSE & REPAIR

TROUBLE SYMPTOM	POSSIBLE CAUSE	REPAIR
• Lack of power at high speed	• Defective vehicle speed switch	• Replace
• Much NOx and HC	• Defective vehicle speed switch	• Replace

2

EXHAUST EMISSION CONTROL SYSTEM	CALIFORNIA
KEY CHANGE	808 (1300)

KEY CHANGE

- A part of exhaust emission control system has been changed, as shown in the following table.

ITEM	1977 MODEL	1976 MODEL	REF. PAGE
1. HEAT HAZARD WARNING SYSTEM	o	—	2–12 ~ 2–13
① Heat hazard sensor	o	—	
② Warning lamp	o	—	
2. EGR MAINTENANCE WARNING SYSTEM	X	○	
① Maintenance interval detector	X	○	
② Reset switch	X	○	
③ Warning lamp	X	○	
3. CATALYTIC CONVERTER WARNING SYSTEM	X	○	
① Catalyst thermo sensor	X	○	
② Warning lamp	X	○	

o marked: Newly equipped for 1977 model
X marked: Abolished from 1977 model
○ marked: Equipped for both 1977 and 1976 models
– marked: Not equipped for 1976 model

NOTE:
Due to the abolishment of the catalyst thermo sensor, the secondary air is cut when the engine speed is more than 4,000 rpm only.

— AIR INJECTION AND CATALYTIC CONVERTER (AI AND CCo) SYSTEM —

EXHAUST EMISSION CONTROL SYSTEM	CALIFORNIA
KEY CHANGE (CONT.)	808 (1300)

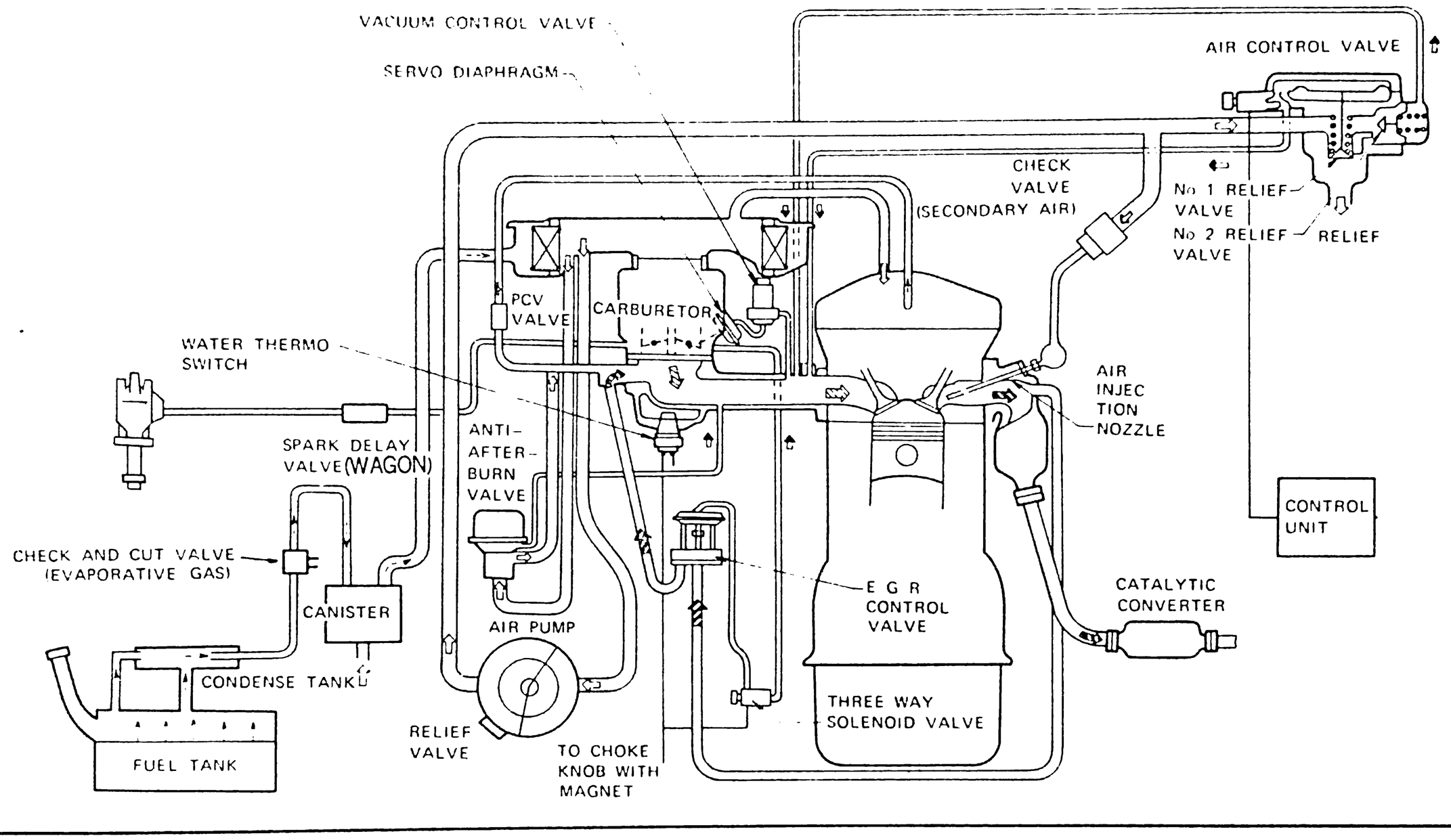

Fig. 2-18 1977 Emission control system

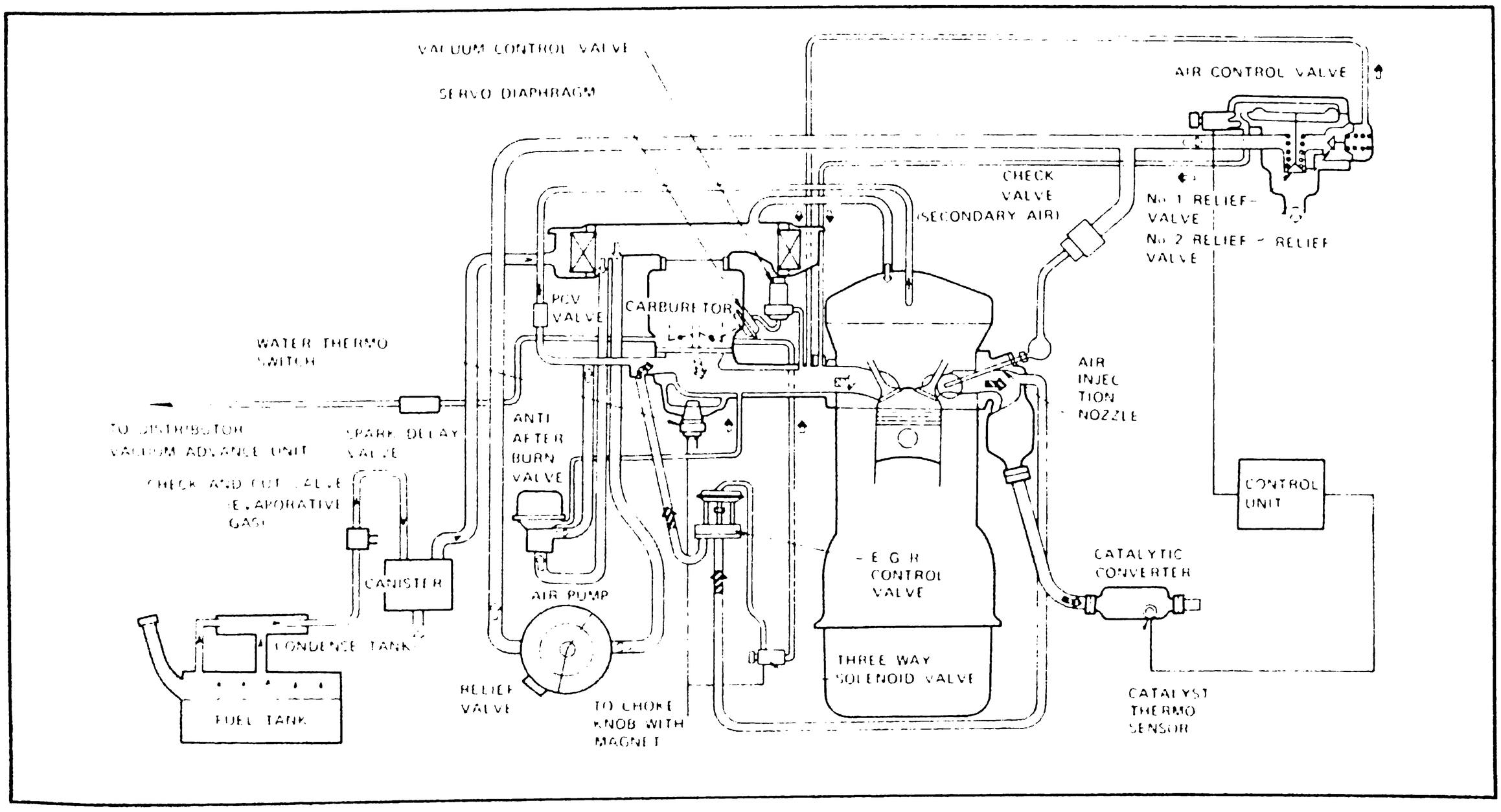

Fig. 2-19 1976 Emission control system

2

EXHAUST EMISSION CONTROL SYSTEM

KEY CHANGE

CALIFORNIA

808 (1600)

KEY CHANGE

- A part of exhaust emission control system has been changed to satisfy the 1977 requirement for California, as shown in the following table.

ITEM	1977 MODEL	1976 MODEL	REF. PAGE
1. DASH POT	●	—	2–12 ~ 2–13
2. HEAT HAZARD WARNING SYSTEM ① Heat hazard sensor ② Warning lamp	● ● ●	— — —	2–22 ~ 2–23
3. EGR MAINTENANCE WARNING SYSTEM ① Maintenance interval detector ② Reset switch ③ Warning lamp	X X X X	○ ○ ○ ○	
4. CATALYTIC CONVERTER WARNING SYSTEM ① Catalyst thermo sensor ② Warning lamp	X X X	○ ○ ○	
5. AIR INJECTION AND CATALYTIC CONVERTER SYSTEM ① Clutch switch	◎ X	◎ ○	

● marked: Newly equipped for 1977 model
X marked: Abolished from 1977 model
◎ marked: Equipped for both 1977 and 1976 models (1977 same as 1976)
○ marked: Equipped for 1976 model
– marked: Not equipped for 1976 model

NOTE:

Due to the abolishments of the clutch switch, and catalyst thermo sensor, the secondary air is cut when the engine speed is more than 4,000 rpm only.

— AIR INJECTION AND CATALYTIC CONVERTER SYSTEM —

EXHAUST EMISSION CONTROL SYSTEM	CALIFORNIA
KEY CHANGE (CONT.)	808 (1600)

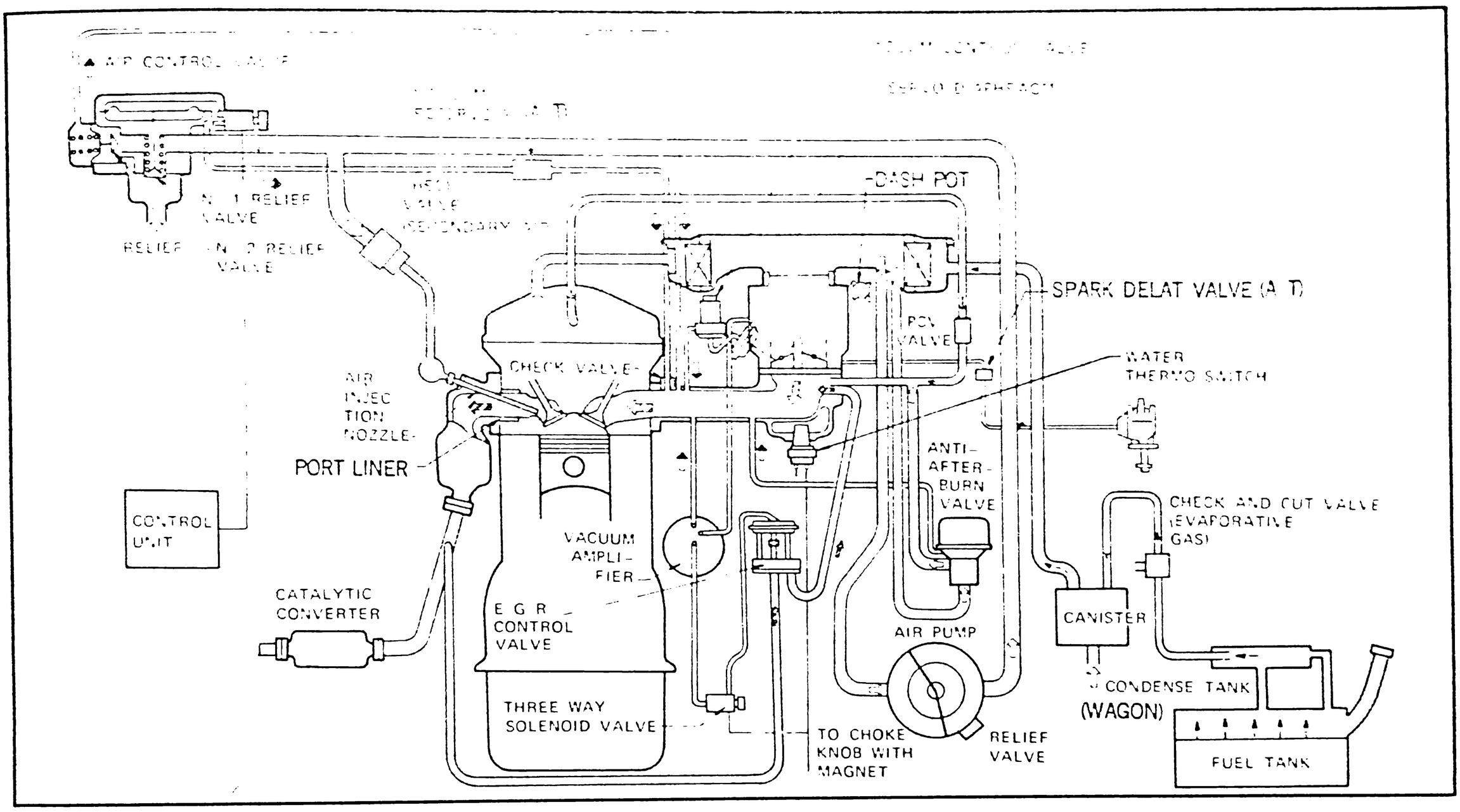

Fig. 2-20 1977 Emission control system

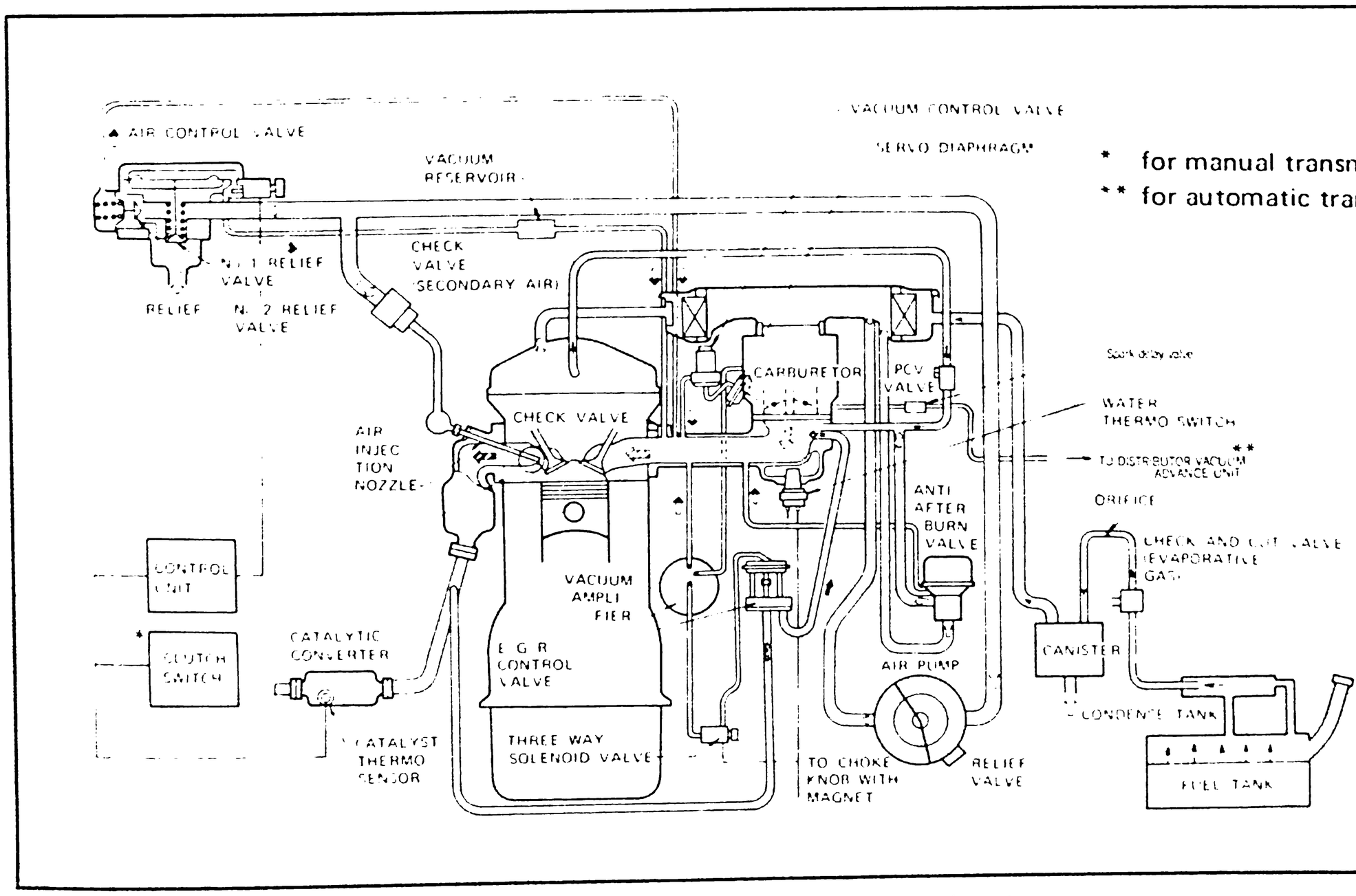

* for manual transmission only
** for automatic transmission only

Fig. 2-21 1976 Emission control system

DASH POT

DESCRIPTION

CALIFORNIA

808 (1600)

DESCRIPTION

The dash pot rod is designed to maintain a balanced air-fuel mixtures during gear shifting to reduce the HC.

When the accelerator pedal is released for gear shifting, the throttle valve will close to idle position. As a result, the engine intake mixture will become rich. This over rich mixture will not burn completely, and will discharge the excessive HC and will cause an abnormal combustion or afterburn in the exhaust system.

To avoid above conditions, the primary throttle valve returns gradually from the specified throttle valve opening (engine rpm at the point of throttle lever touching the dash pot rod is 2000 ± 100 rpm) to the idle position with the operation of dash pot.

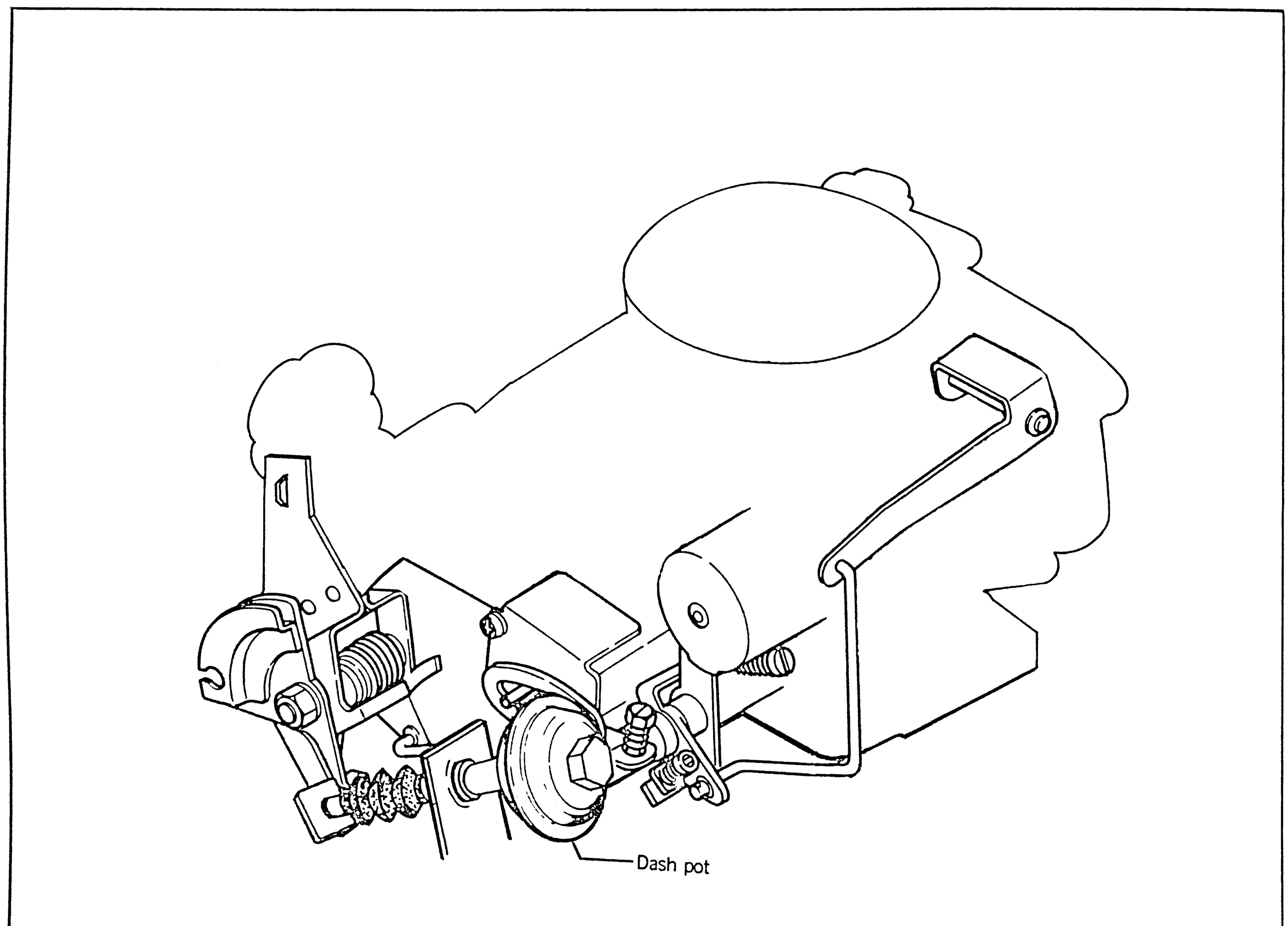

Fig. 2-22 Dash pot

DASH POT

CHECKING · ADJUSTMENT
TROUBLE SYMPTOM, CAUSE & REPAIR

CALIFORNIA

808 (1600)

CHECKING DASH POT

1. Remove the air cleaner.
2. Connect a tachometer to the engine.
3. Operate the throttle lever and make sure the dash pot rod comes out quickly.
4. Release the throttle lever and make sure the throttle lever returns slowly to idle position after it has touched the dash pot rod.
5. Start the engine.
6. Slowly decrease the engine speed and check the engine speed when the throttle lever touches the dash pot rod.
   The specified engine speed is 2,000 ± 100 rpm.

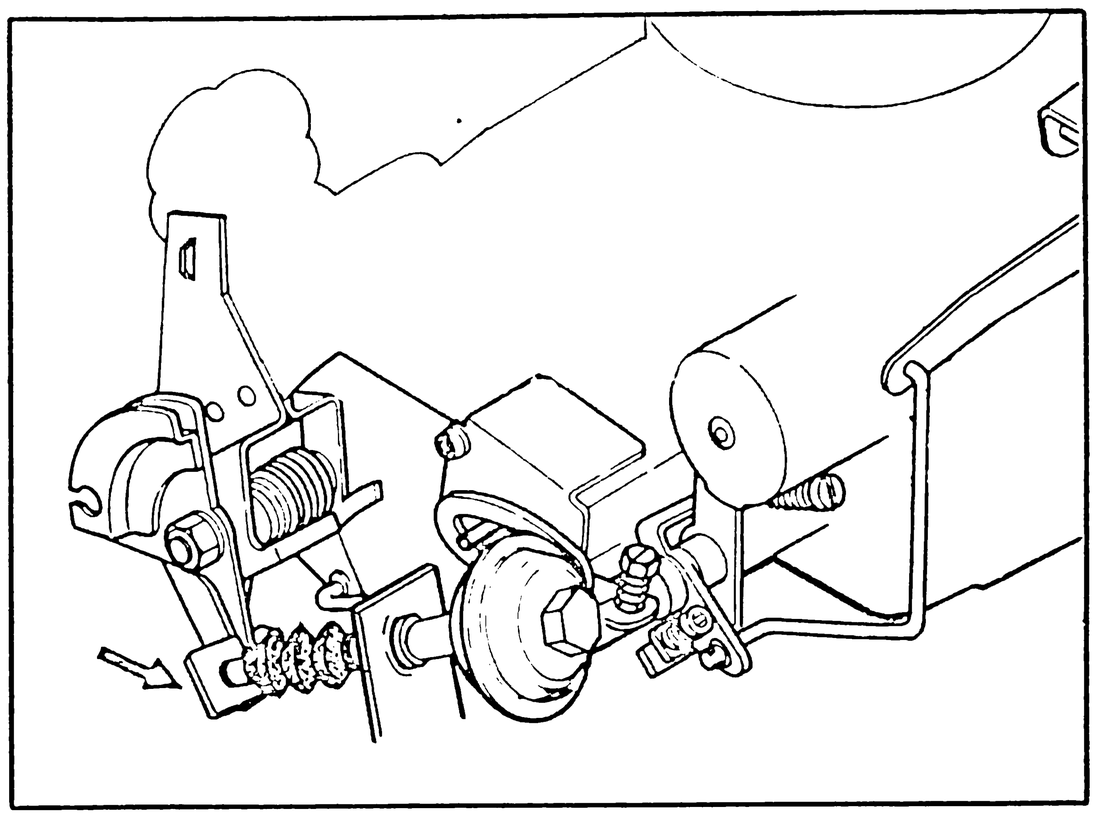

Fig. 2-23 Checking dash pot

ADJUSTING DASH POT

1. Remove the air cleaner.
2. Connect a tachometer to the engine.
3. Loosen the lock nut on the dash pot.
4. Start the engine and set the engine speed to 2,000 rpm with the throttle lever.
5. Screw the dash pot in or out until the dash pot rod just contacts the throttle lever.
6. Tighten the lock nut and make sure the rod touches the throttle lever at 2,000 rpm.

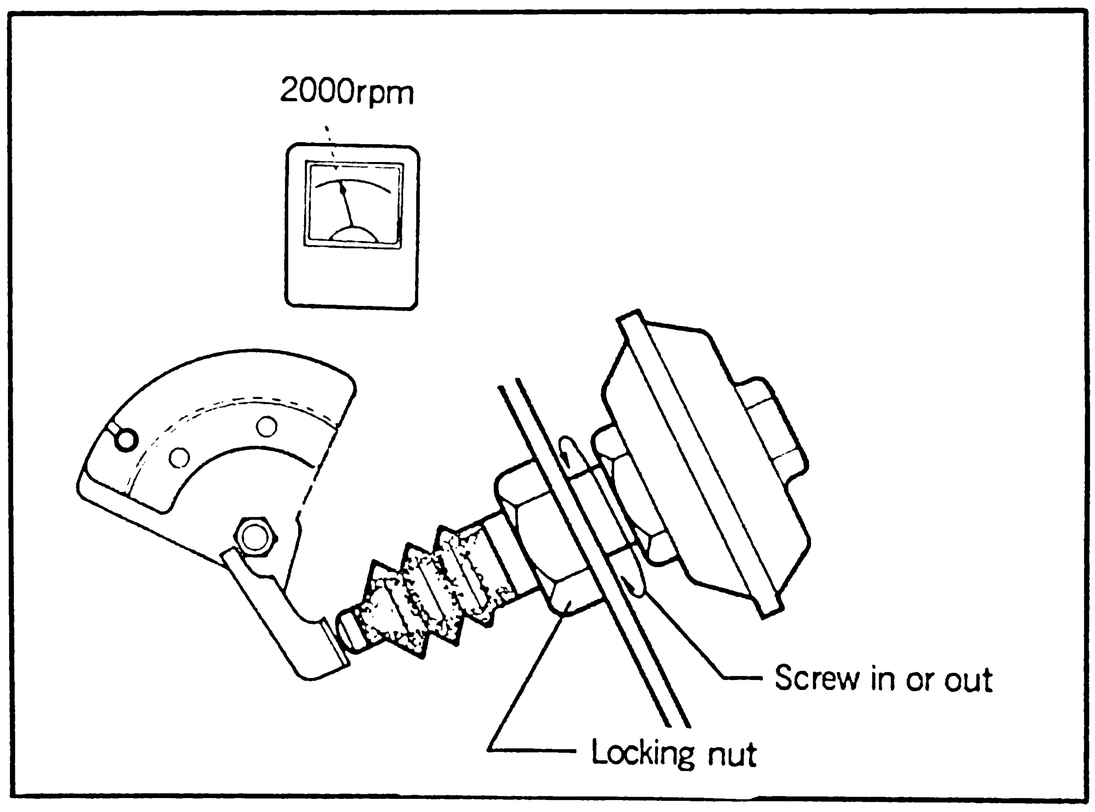

Fig. 2-24 Adjusting dash pot

TROUBLE SYMPTOM, CAUSE & REPAIR

TROUBLE SYMPTOM	POSSIBLE CAUSE	REPAIR
• Engine brake not effective or engine races	• Defective dash pot	• Replace

EXHAUST EMISSION CONTROL SYSTEM

CANADA

KEY CHANGE

808 (1600)

KEY CHANGE

- The exhaust emission control system has been changed, as shown in the following table.

ITEM	1977 MODEL	1976 MODEL	REF. PAGE
1. THROTTLE OPENER	●	—	2–26 ~
1 Vacuum control valve	●	—	2–28
2 Servo diaphragm	●	—	
2. SPARK DELAY SYSTEM	●	—	2–29 ~
1 Spark delay valve	●	—	2–30
3. IGNITION CONTROL SYSTEM			2–31 ~
1 Water thermo switch	●	—	2–32
4. AIR INJECTION SYSTEM	X	○	
1 Air pump	X	○	
2 Check valve (for air pump)	X	○	
3 Air injection manifold and nozzle	X	○	
4 Air control valve	X	○	
(a) Check valve	X	○	
(b) Control unit	X	○	
5. DECELERATION CONTROL SYSTEM	X	○	
1 Anti-afterburn valve	X	○	
2 Coasting richer	X	○	
(a) Accelerator switch	X	○	
(b) Vehicle speed switch	X	○	
6. HEAT HAZARD WARNING SYSTEM	X	○	
1 Heat hazard sensor	X	○	
2 Warning lamp	X	○	

● marked: Newly equipped for 1977 model
X marked: Abolished from 1977 model
○ marked: Equipped for 1976 model
– marked: Not equipped for 1976 model

EXHAUST EMISSION CONT SYSTEM	CANADA
KEY CHANGE (CONT.)	808 (1600)

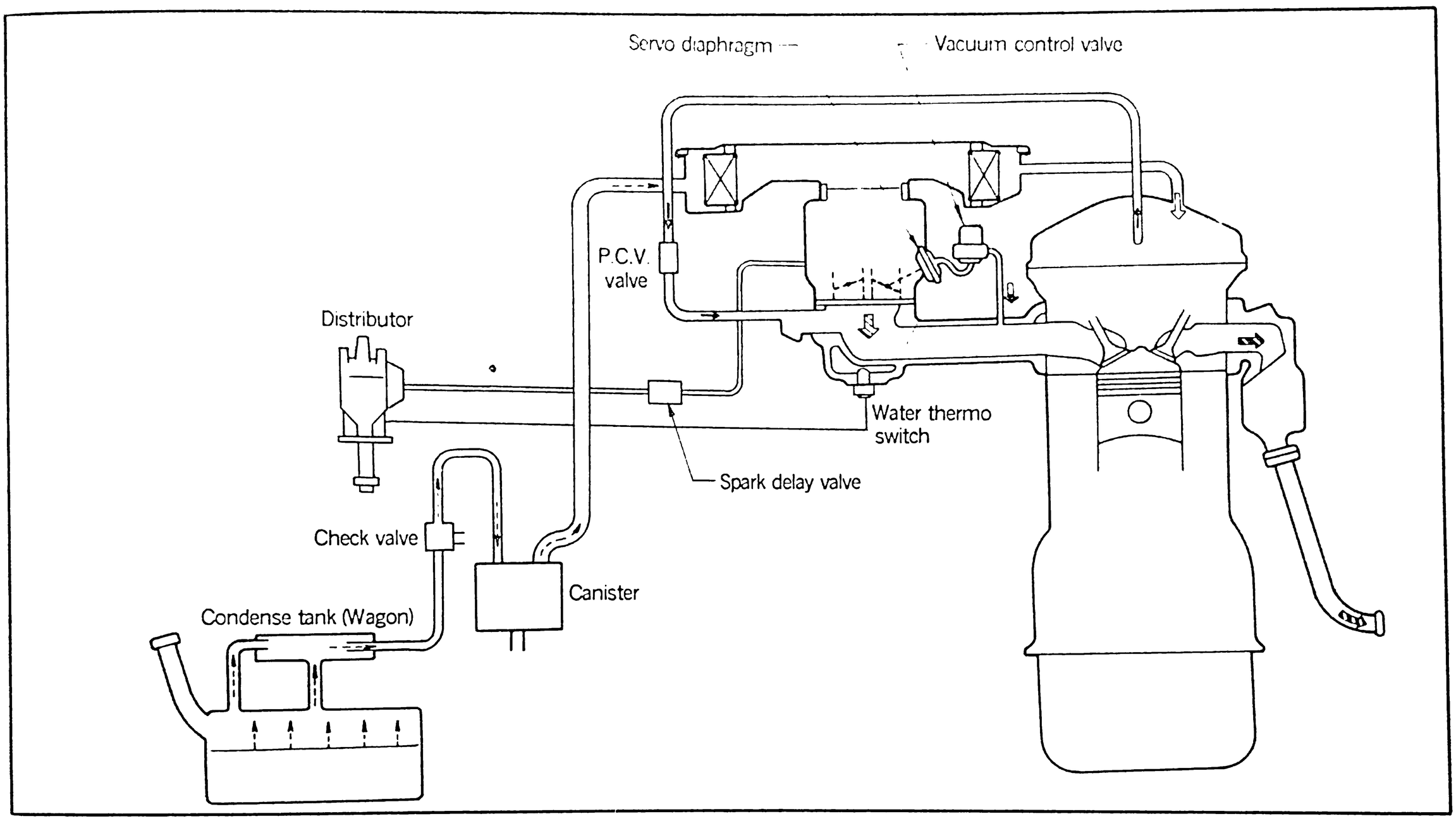

Fig. 2-25 1977 Emission control system

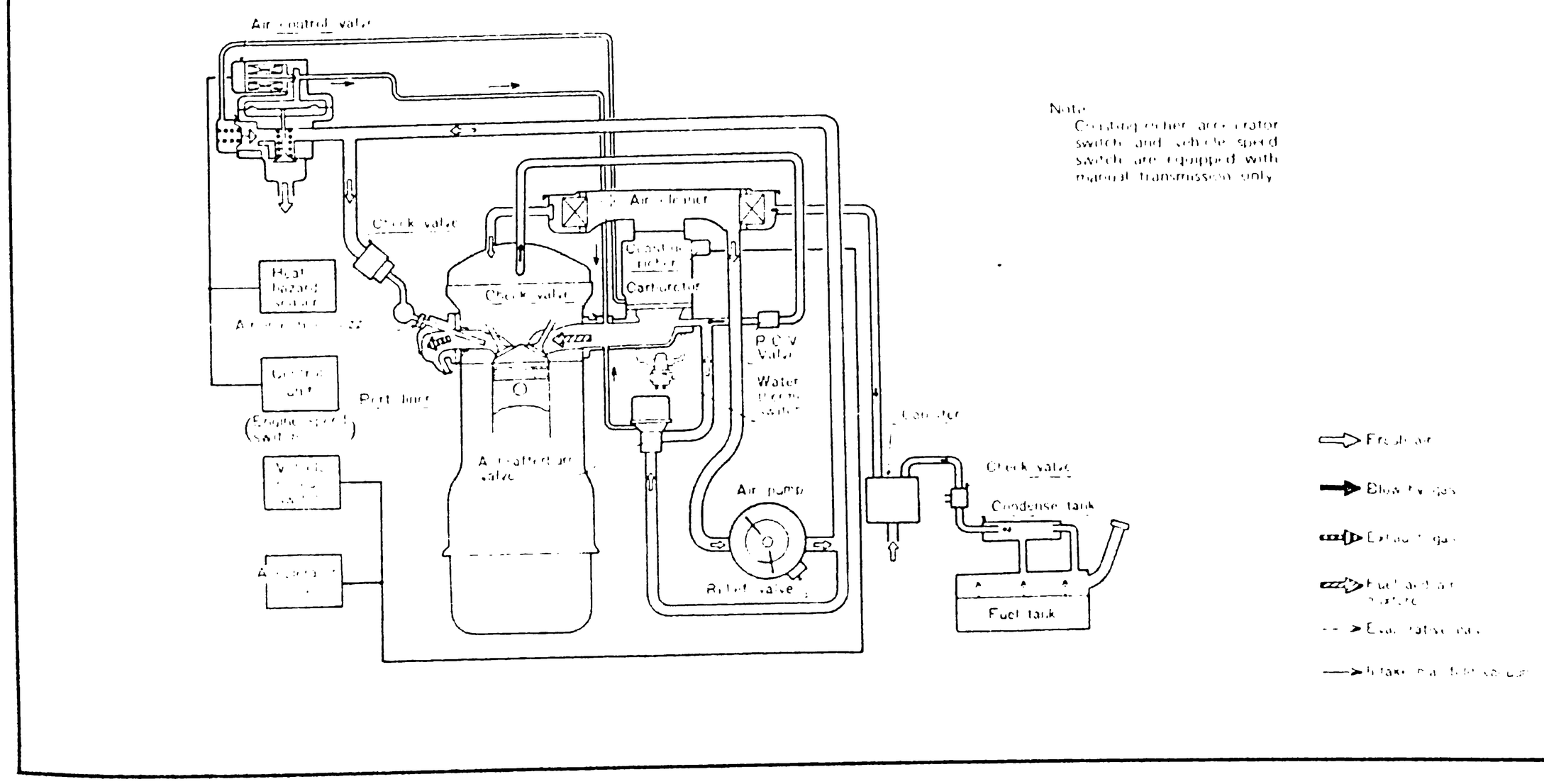

Fig. 2-26 1976 Emission control system

THROTTLE OPENER SYSTEM	CANADA
DESCRIPTION	808 (1600)

DESCRIPTION

The throttle opener system is designed to maintain a balanced air-fuel mixture during deceleration for minimizing the HC.

The throttle opener system is composed of a servo diaphragm connected to the primary throttle lever on the carburetor and a vacuum control valve which controls the manifold vacuum leading to the servo diaphragm.

When the accelerator pedal is released for deceleration, the throttle valve will close to idle speed position. As a result, the engine intake mixture will become lean (insufficient mixture) and will not burn completely. The throttle opener system serves to leave the primary throttle valve slightly opened more than at idling when decelerated, to prevent the the mixture from becoming lean so that complete combustion of the mixture will take place and to reduce the HC and CO.

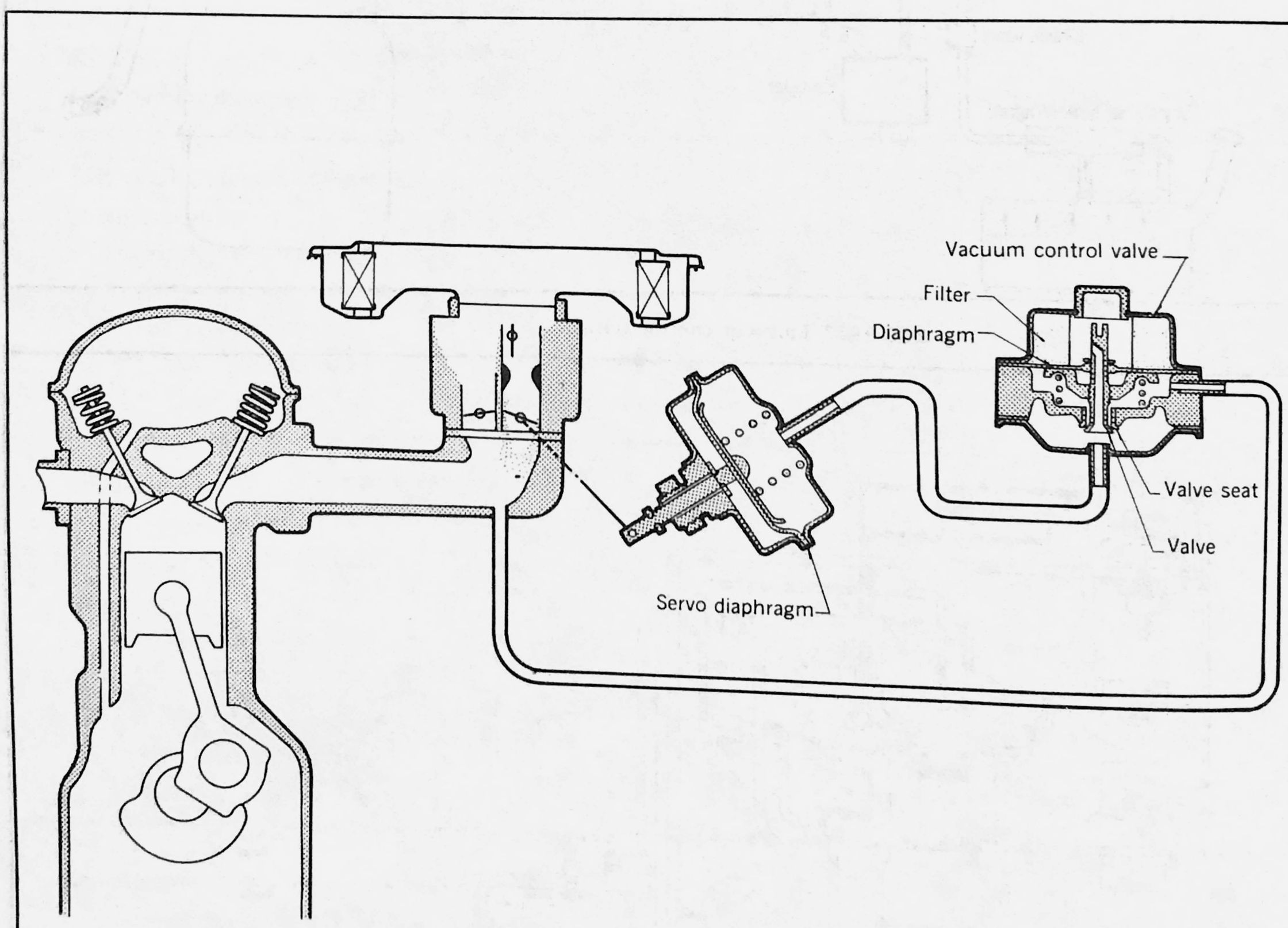

Fig. 2-27 Throttle opener system

THROTTLE OPENER SYSTEM

CANADA

CHECKING

808 (1600)

CHECKING SERVO DIAPHRAGM

1. Start the engine and set the idle speed as specified.
2. Stop the engine and remove the air cleaner.
3. Disconnect the vacuum sensing tube (servo diaphragm ~ vacuum control valve) from the servo diaphragm.
4. Connect the vacuum testing tube to the servo diaphragm so that the inlet manifold vacuum can be led directly to the servo diaphragm.
5. Disconnect the vacuum sensing tube (carburetor ~ distributor) at the distributor, to prevent the advancing of ignition timing.
6. Connect a tachometer to the engine.
7. Start the engine and read the engine speed. If the engine speed is **1500 ± 100 rpm,** the servo diaphragm is normal.
   If the engine speed is not within the specification, turn the throttle opener adjusting screw in or out until the specified engine speed is obtained.
   If this adjustment can not obtain the specified engine speed, replace the servo diaphragm.

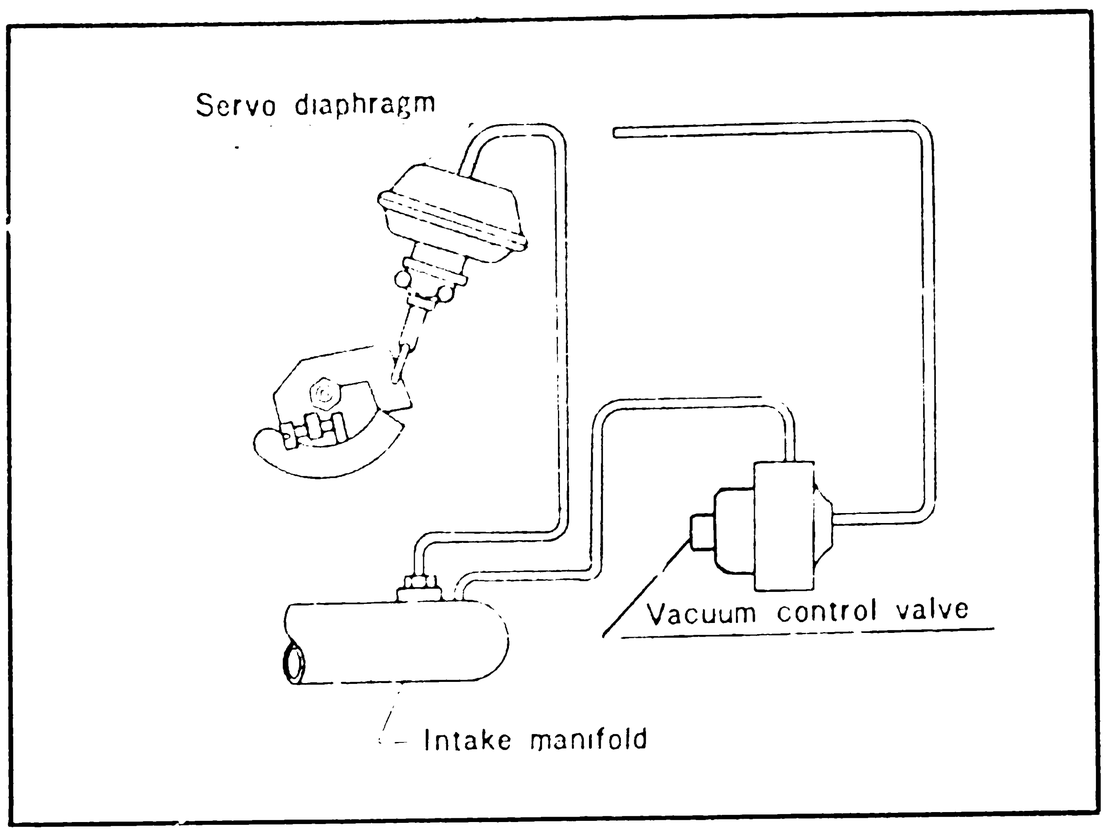

Fig. 2-28 Checking servo diaphragm

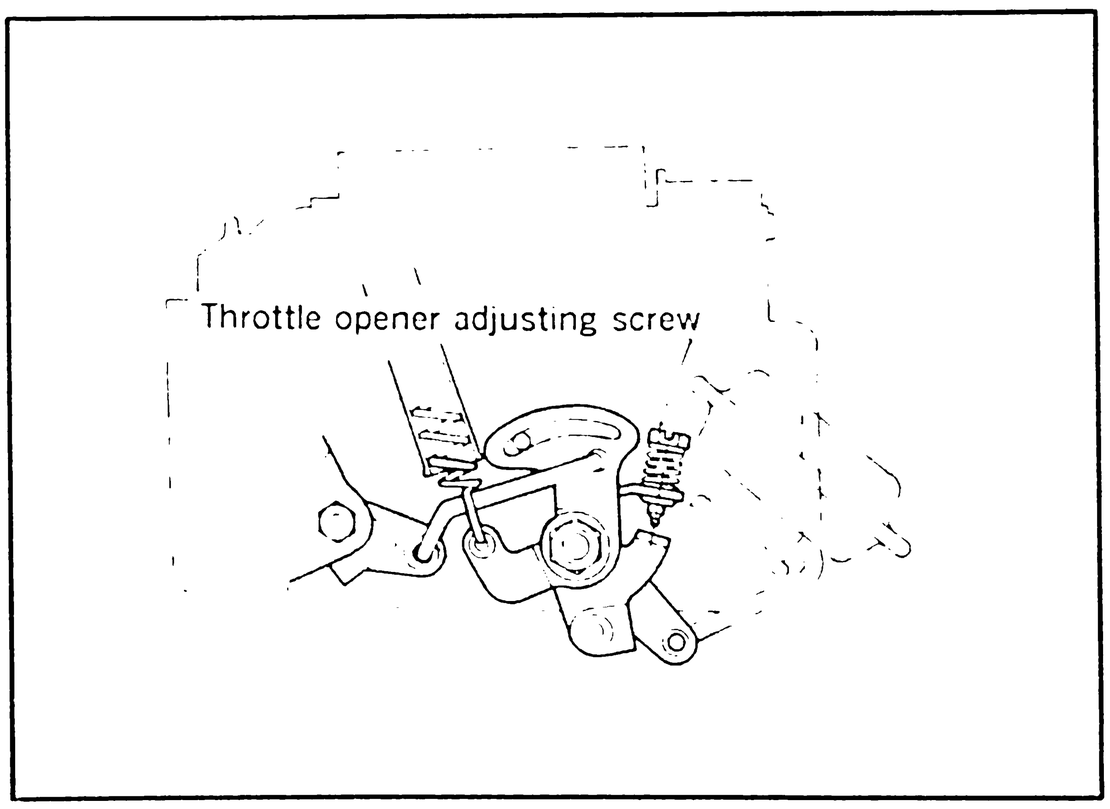

Fig. 2-29 Throttle opener adjusting screw

CHECKING VACUUM CONTROL VALVE

2. Disconnect the vacuum sensing tube (vacuum control valve ~ inlet manifold) at the inlet manifold and connect a vacuum gauge, as shown in Fig. 2-30. The vacuum gauge tube must have 0.12 in (3 mm) inner diameter and the length of the vacuum gauge tube must be within 6.6 ft (2 m).
3. Start the engine.
4. Raise the engine speed to about 3,000 rpm and quickly release the accelerator. The vacuum gauge reading should reach a highest reading soon after releasing the accelerator and then descend to **22.0 ± 0.4 in (560 ± 10 mm-Hg)**. The reading should come to a rest for a few seconds at this point, then gradually fall until it reach the idle vacuum.
   This operation is shown in Fig. 2-31.
   If the reading is not within the specifications, remove the cap and turn the adjuster shown in Fig. 2-32 until the correct reading is obtained.

NOTE:

The above reading (560 mm-Hg) is determined under the

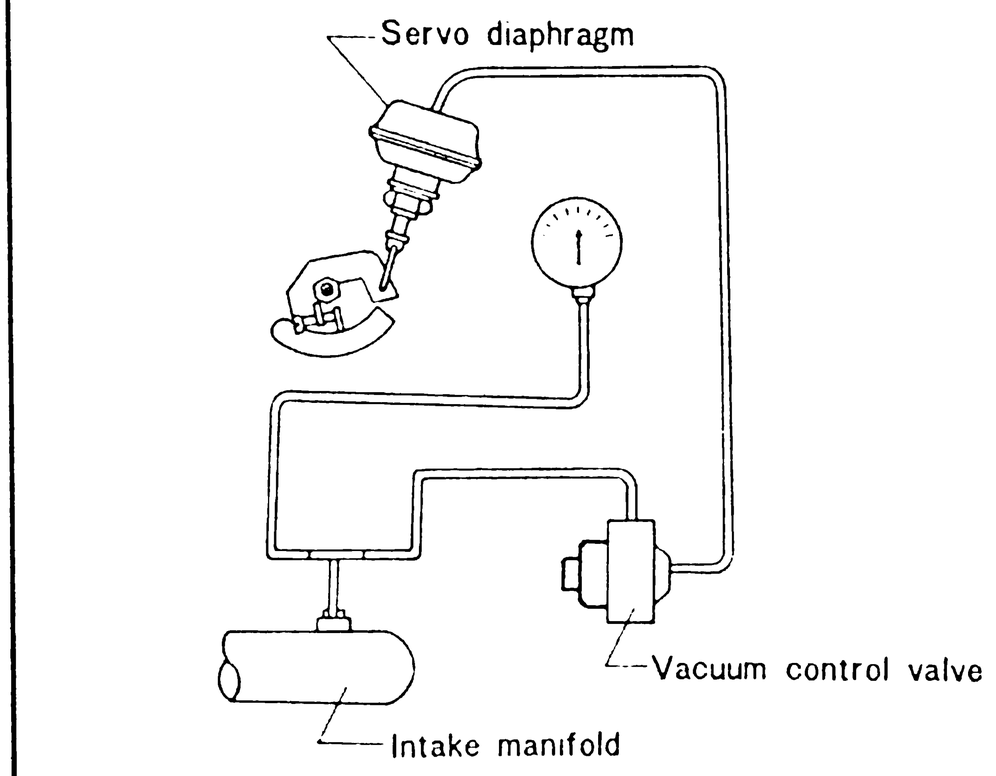

Fig. 2-30 Checking vacuum control valve

atmospheric pressure of 29.9 in-Hg (760 mm-Hg), so precautions should be exercised if the atmospheric pressure is different from the above figure.
For example, if the atmospheric pressure is 750 mm-Hg, correct the reading by 10 mm-Hg to 560 mm-Hg.

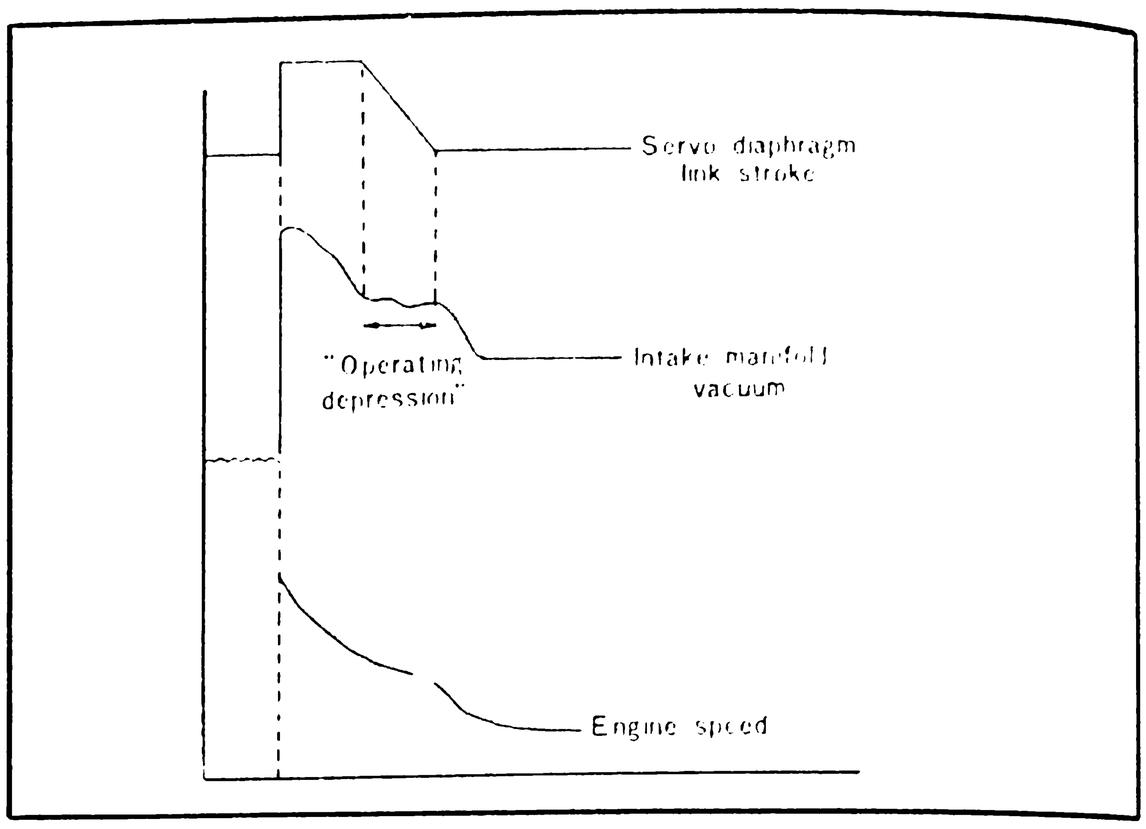

Fig. 2-31 Operating depression

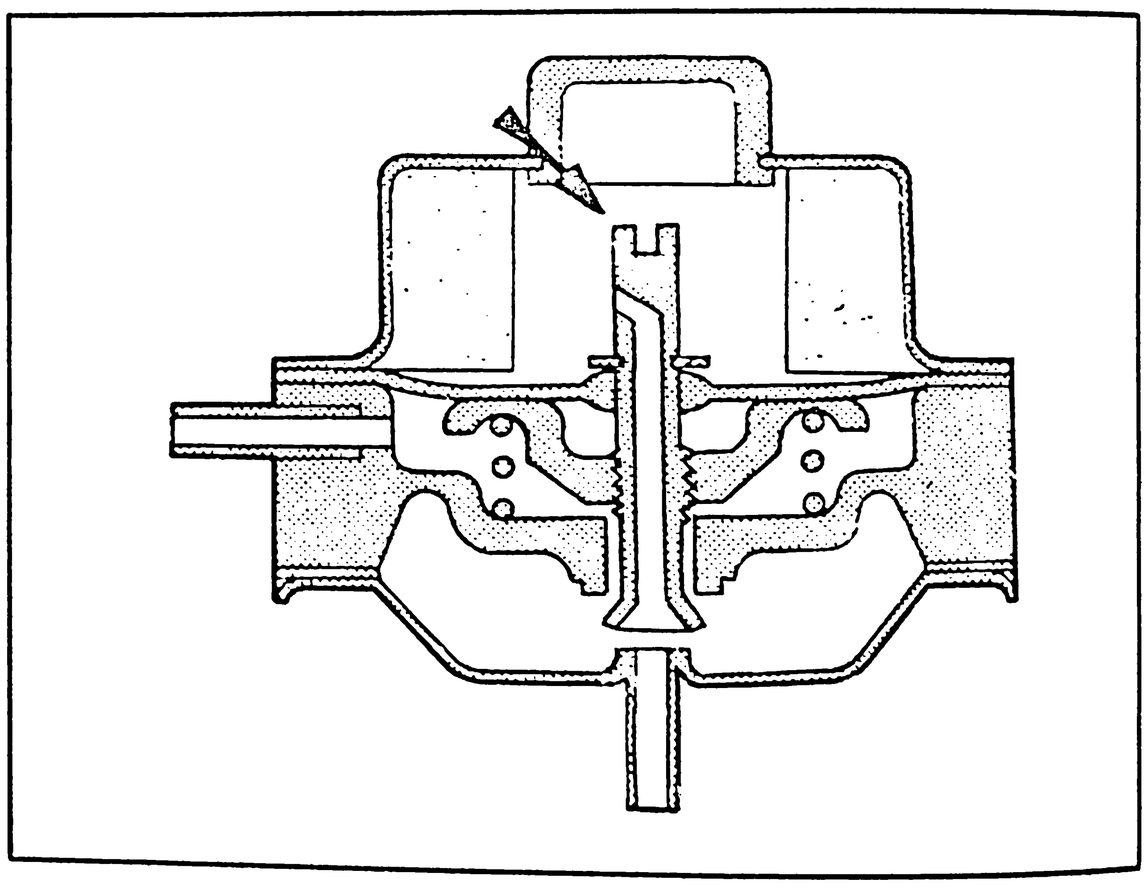

Fig. 2-32 Operating depression adjusting screw

TROUBLE SYMPTOM, CAUSE & REPAIR

TROUBLE SYMPTOM	POSSIBLE CAUSE	REPAIR
• Engine brake not effective or engine races	• Vacuum control valve is stuck opened.	• Replace
	• Defective servo diaphragm	• Replace

SPARK DELAY SYSTEM	CANADA
DESCRIPTION	808 (1600)

DESCRIPTION

The spark delay system serves to delay the vacuum advance during acceleration for the purpose of minimizing the generation of NOx and HC.

Operating conditions:

Gradual acceleration	Vacuum spark advance normal, but delayed
Deceleration	No vacuum spark advance

The system consists of a spark delay valve and distributor.

The spark delay valve controls the intake manifold vacuum leading to the distributor vacuum advance unit.

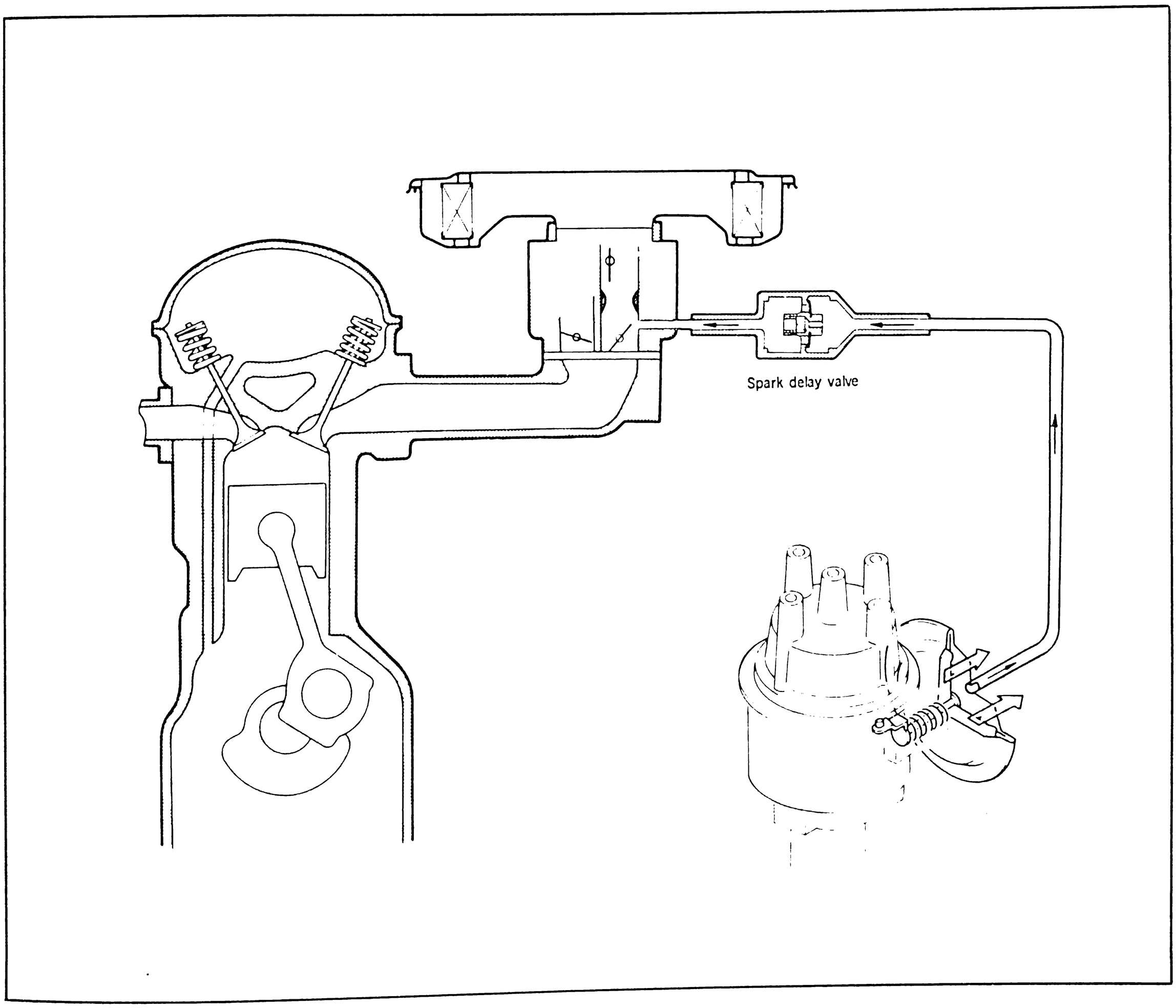

Fig. 2-33 Spark delay system

SPARK DELAY SYSTEM

CHECKING
TROUBLE SYMPTOM, CAUSE & REPAIR

CANADA

808 (1600)

CHECKING SPARK DELAY VALVE

1. Disconnect the tube (spark delay valve ~ distributor) at the distributor.
2. Remove the plug from the inlet manifold.
3. Disconnect the tube (spark delay valve ~ carburetor) at the carburetor and connect a vacuum gauge, as shown in Fig. 2-34.
4. Run the engine at idle and take a reading of the vacuum gauge.
5. Disconenct the tube from the inlet manifold, while observing the time required until the reading becomes to 11.81 in-Hg (300 mm-Hg) plug the reading determined in Step 4. The time should be 18 ~ 42 seconds.
   If it is not within the specifications, replace the spark delay valve.

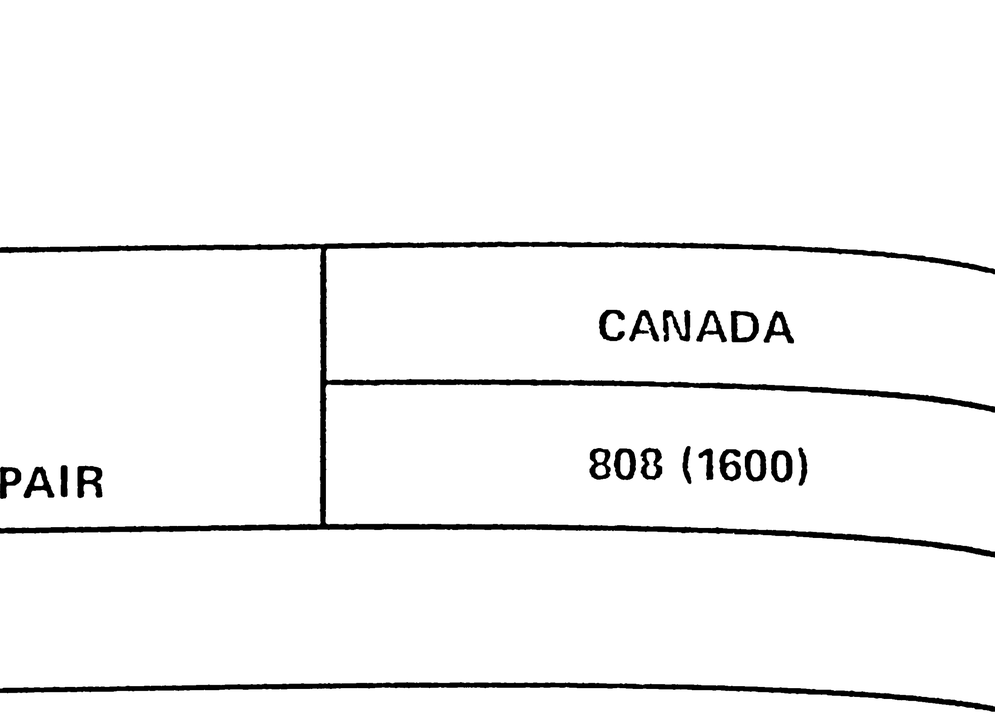

Fig. 2-34 Checking spark delay valve

NOTE:

When installing the delay valve, face arrow mark (➡) on the delay valve toward the distributor side.

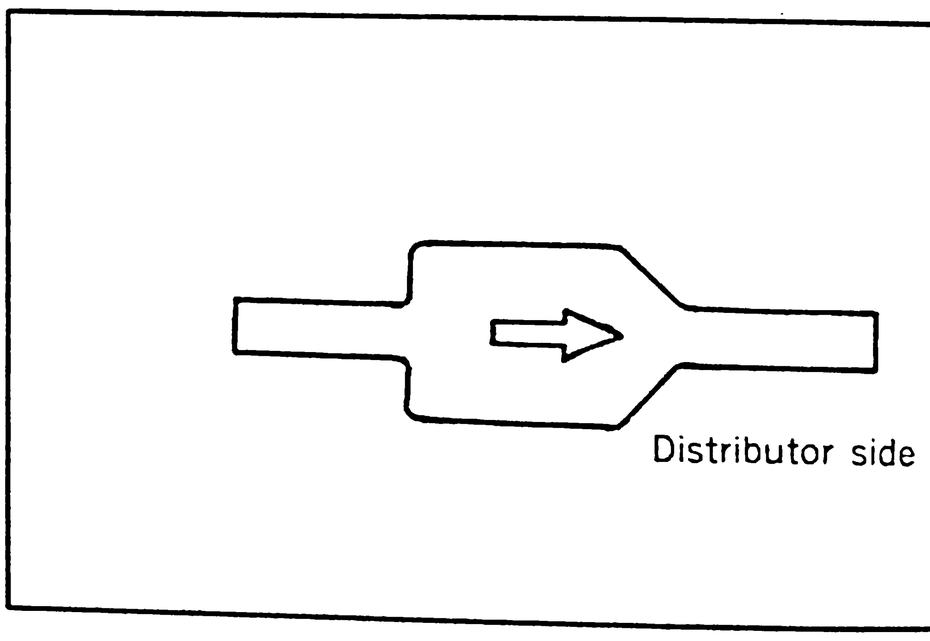

Fig. 2-35 Spark delay valve

TROUBLE SYMPTOM, CAUSE & REPAIR

TROUBLE SYMPTOM	POSSIBLE CAUSE	REPAIR
• Hesitates on acceleration or poor power • Surges • Poor fuel economy	• Spark delay valve is stuck closed.	• Replace

IGNITION CONTROL SYSTEM	CANADA
DESCRIPTION	808 (1600)

DESCRIPTION

The ignition control system retards or advances the ignition timing under the conditions shown in the following table. The retarded ignition timing reduce the NOx.

This system consists of a water thermo switch and dual point distributor.

OPERATING CONDITION

TIMING	ENGINE CONDITION	WATER THERMO SWITCH
Retard	Engine hot < Water temperature: More than 122 ~ 140°F (50 ~ 60°C) >	ON
Normal (Advance)	Engine cold < Water temperature: Lower than 122 ~ 140°F (50 ~ 60°C) >	OFF

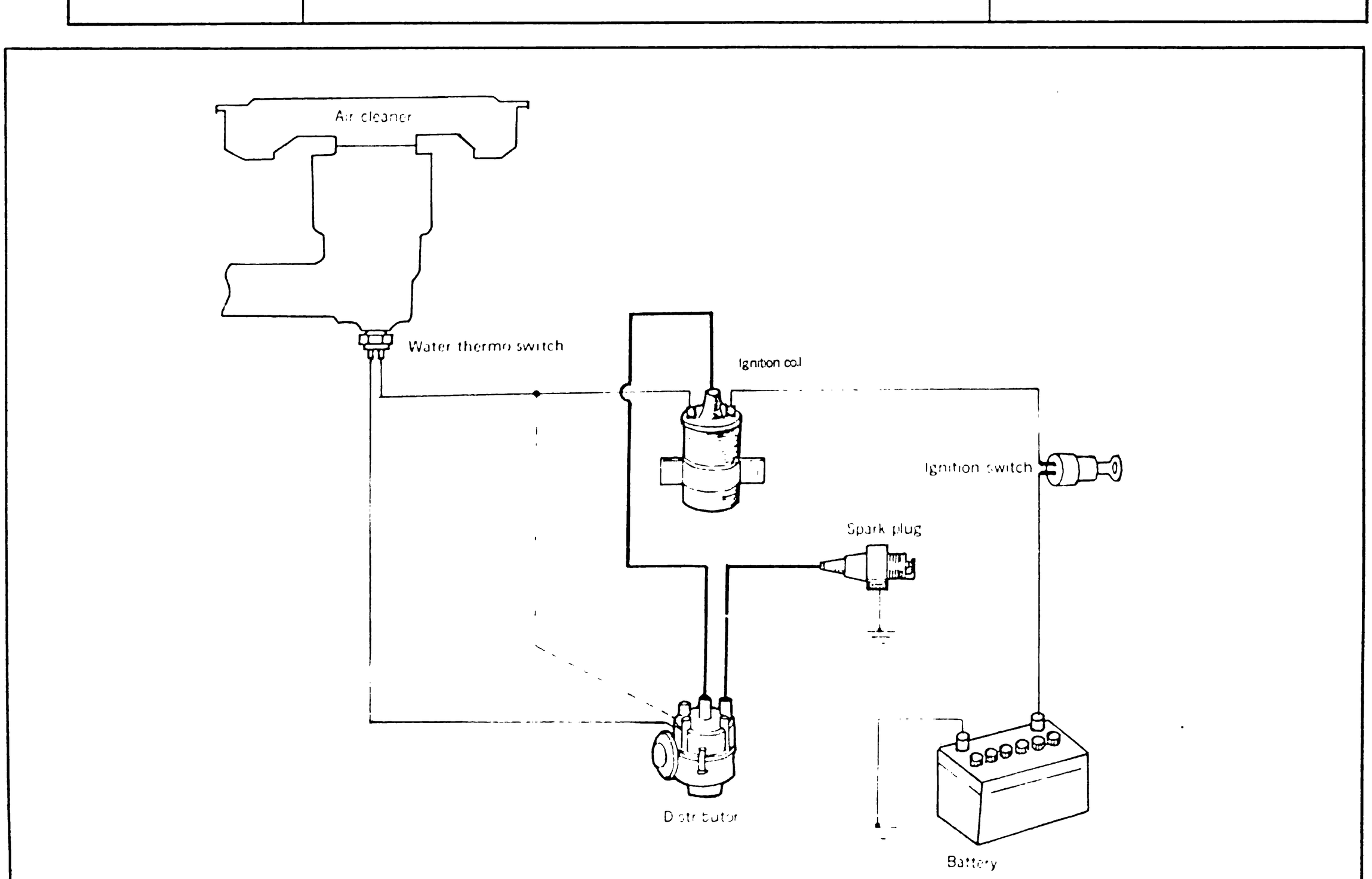

Fig. 2-36 Ignition control system

IGNITION CONTROL SYSTEM

CHECKING

TROUBLE SYMPTOM, CAUSE & REPAIR

CANADA

808 (1600)

CHECKING WATER THERMO SWITCH

To check the water thermo switch, connect a test light to the water thermo switch, and place it with a thermometer and gradually heat the water.

Check the water temperature when the light starts to go on. If the light does not go on at the temperature of 122 ~ 140°F (50 ~ 60°C), replace the water thermo switch.

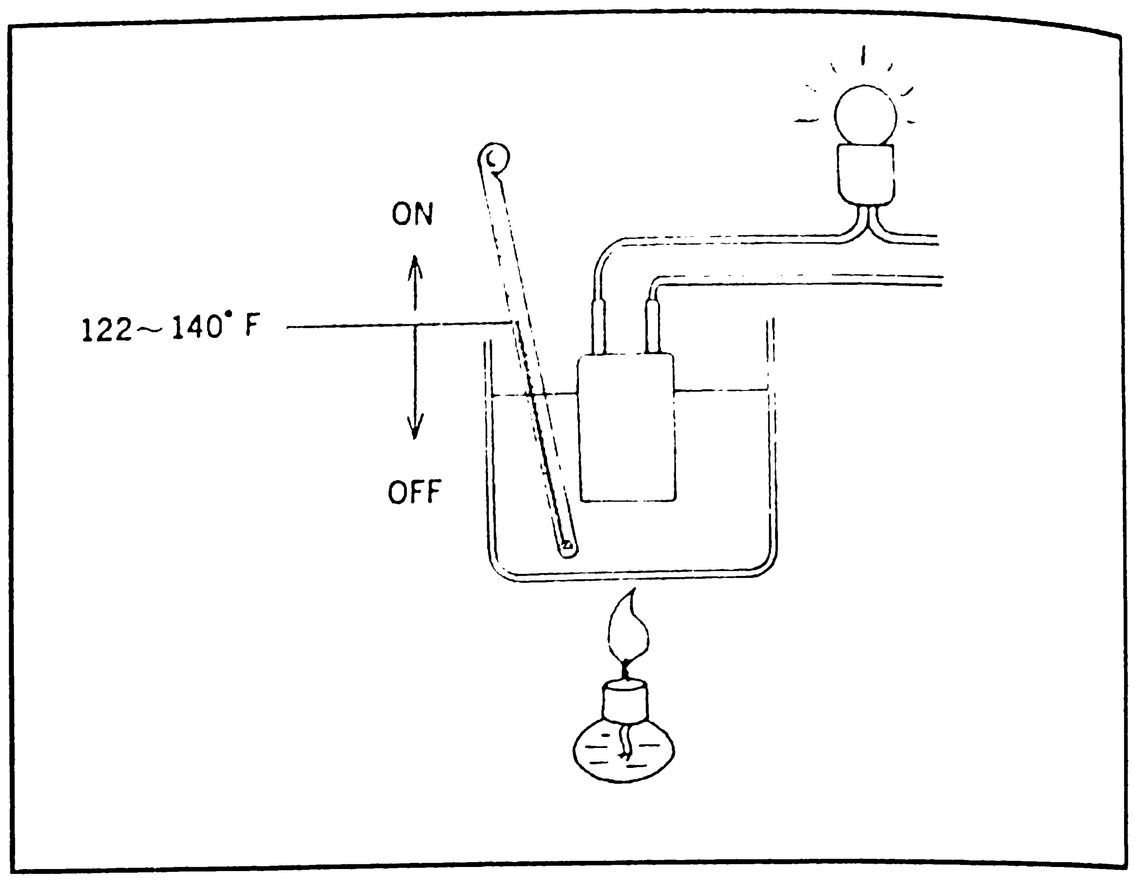

Fig. 2-37 Checking water thermo switch

TROUBLE SYMPTOM, CAUSE & REPAIR

TROUBLE SYMPTOM	POSSIBLE CAUSE	REPAIR
• Lack of power	• Defective water thermo switch	• Replace
• Much NOx and HC	• Defective water thermo switch	• Replace

EXHAUST EMISSION CONTROL SYSTEM

DESCRIPTION

CANADA

808 (1300)

DESCRIPTION

- The exhaust emission control system equipped on the 1977 model is same as the 1976 model.

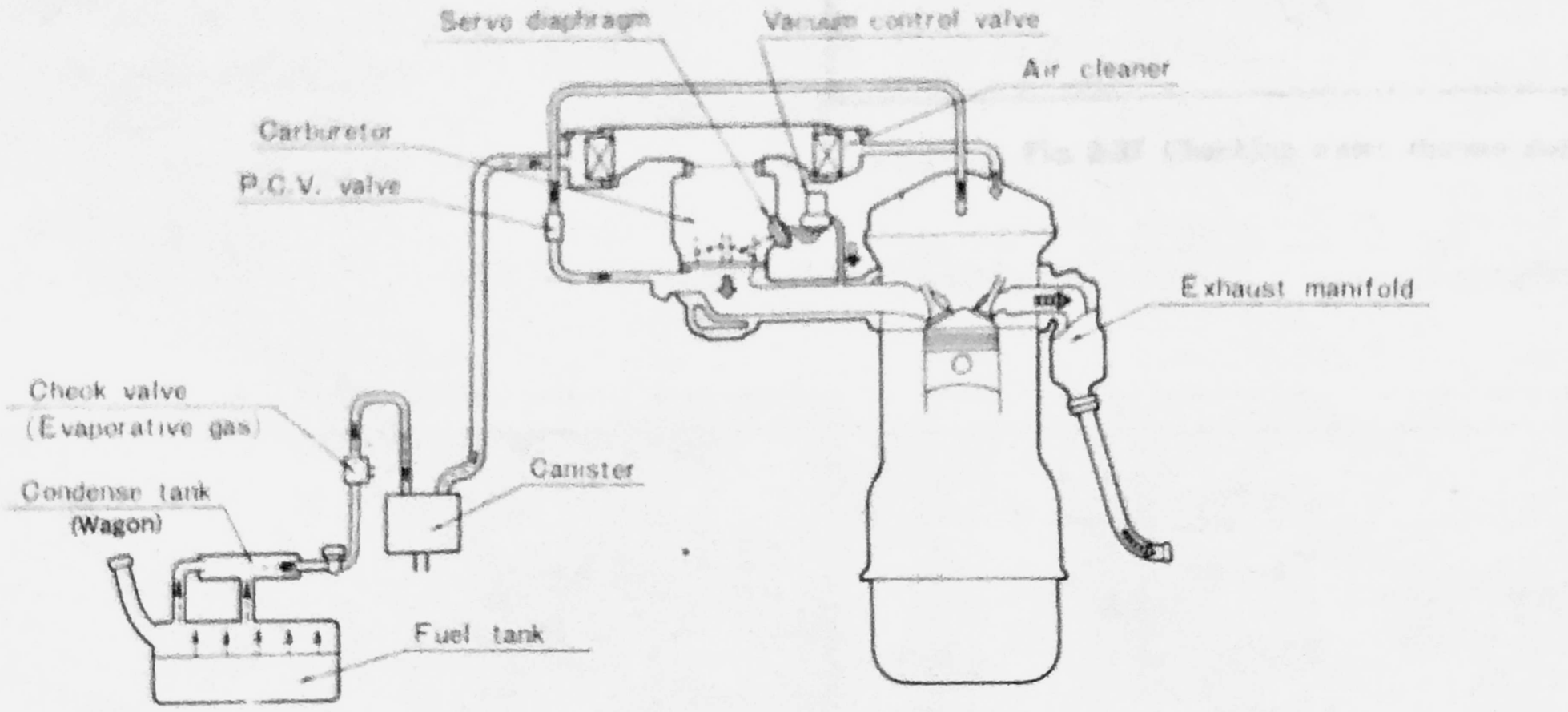

Fig. 2-38 1977 Emission control system

EVAPORATIVE EMISSION CONTROL (EVAP) SYSTEM

FEDERAL
CALIFORNIA

808 (1300) · 808 (1600)

KEY CHANGE

KEY CHANGE

- The fuel tank capacity for Sedan & Coupe has been changed from 45 liters to 42 liters to provide the condense space in the fuel tank.

- The condense tank for Sedan & Coupe has been abolished as the adoption of condense space.

NOTE:
The condense space provided in the fuel tank condenses the evaporated fuel.

ITEM	SEDAN · COUPE		WAGON	
	1977	1976	1977	1976
1. EVAP SYSTEM	◎	◎	◎	◎
① Condense space (in fuel tank)	●	—	△	—
② Condense tank	X	○	◎	◎
③ Canister	◎	◎	◎	◎
④ Check and cut valve	◎	◎	◎	◎

● marked: Newly equipped for 1977 model
X marked: Abolished from 1977 model
◎ marked: Equipped for both 1977 and 1976 models (1977 same as 1976)
○ marked: Equipped for 1976 model
– marked: Not equipped for 1976 model
△ marked: Not equipped for 1977 model

NOTE:
The checking procedures of 1977 EVAP system are same as 1976 EVAP system.

EVAPORATIVE EMISSION CONTROL (EVAP) SYSTEM	FEDERAL CALIFORNIA
KEY CHANGE (CONT.)	808 (1300) · 808 (1600)

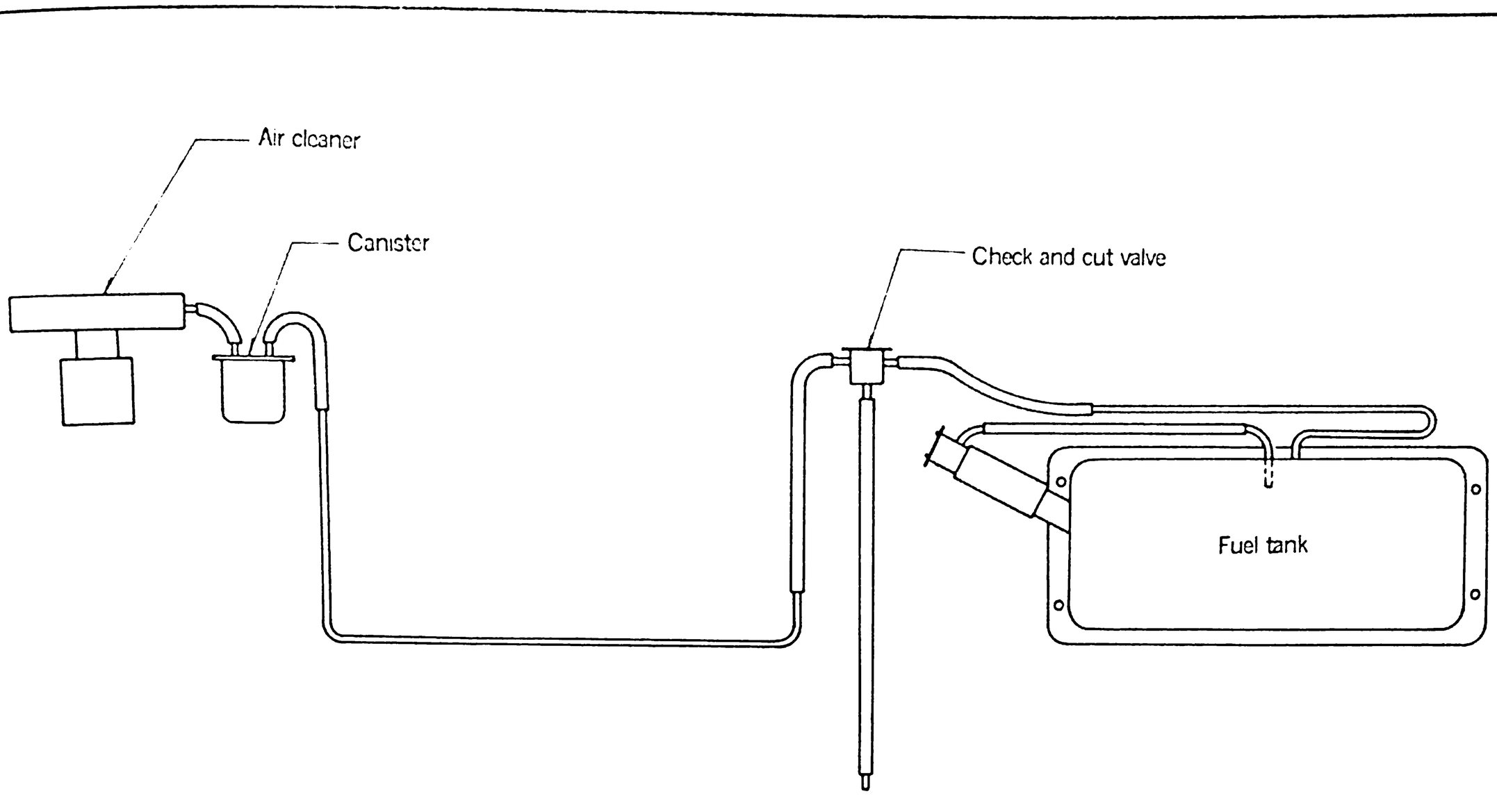

Fig. 2-39 1977 EVAP system (Sedan · Coupe)

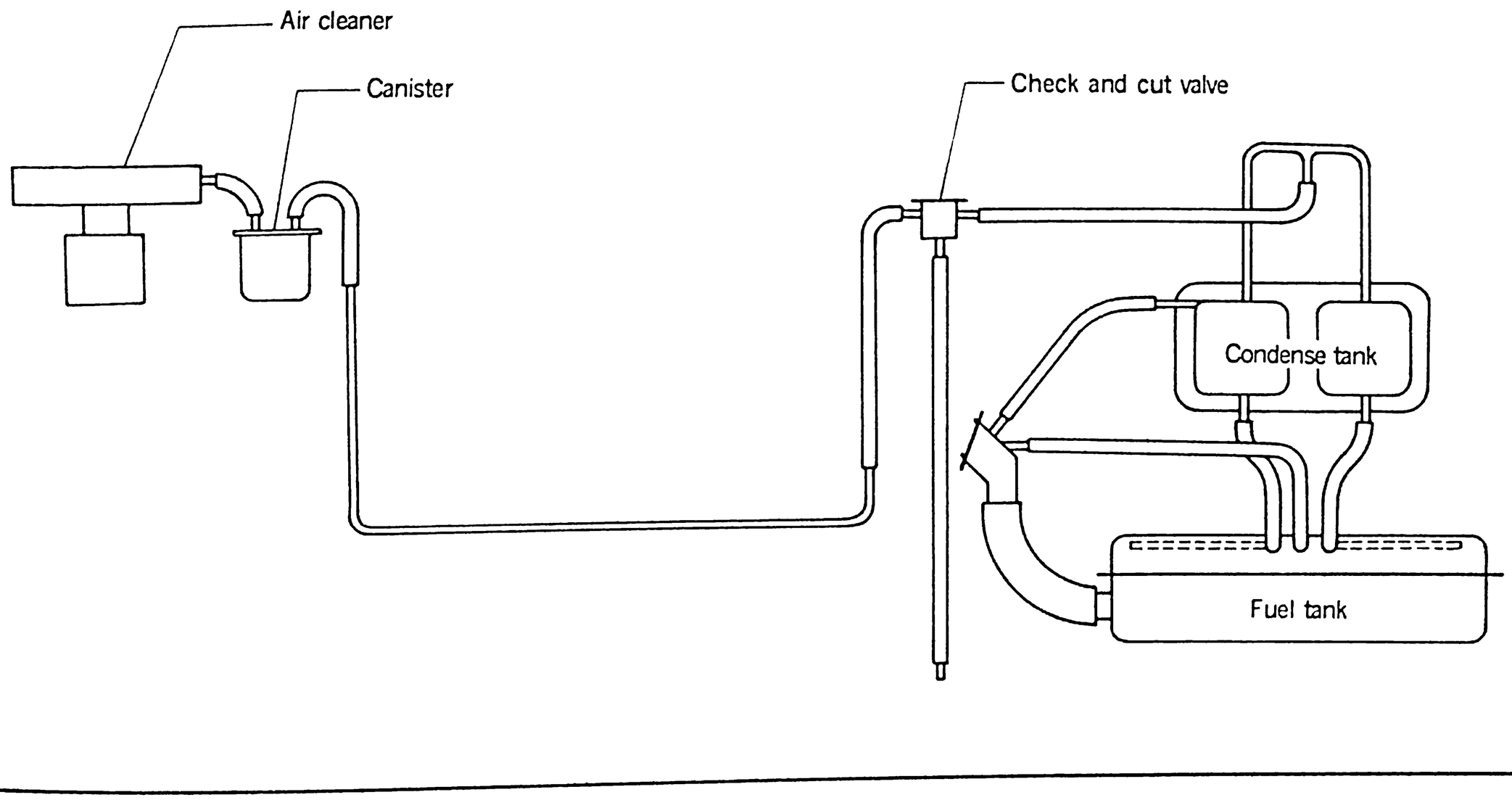

Fig. 2-40 1977 EVAP system (Wagon)

EVAPORATIVE EMISSION CONTROL (EVAP) SYSTEM

CANADA

808 (1300) · 808 (1600)

KEY CHANGE

KEY CHANGE

- The fuel tank capacity for Sedan & Coupe has been changed from 45 liters to 42 liters to provide the conden space in the fuel tank.

- The condense tank for Sedan & Coupe has been abolished as the adoption of condense space.

NOTE:
The condense space provided in the fuel tank condenses the evaporated fuel.

- The configuration of check valve has been changed as shown in Fig. 2-43.

ITEM	SEDAN · COUPE		WAGON	
	1977	1976	1977	1976
1. EVAP SYSTEM	◎	◎	◎	◎
① Condense space (in fuel tank)	⊙	—	△	—
② Condense tank	X	○	◎	◎
③ Canister	◎	◎	◎	◎
④ Check valve	*	○	*	○

⊙ marked: Newly equipped for 1977 model
X marked: Abolished form 1977 model
◎ marked: Equipped for both 1977 and 1976 models (1977 same as 1976)
○ marked: Equipped for 1976 model
— marked: Not equipped for 1976 model
△ marked: Not equipped for 1977 model
* marked: Modified from 1977 model

NOTE:
The checking procedures of 1977 EVAP system are same as 1976 EVAP system.

EVAPORATIVE EMISSION CONTROL (EVAP) SYSTEM KEY CHANGE (CONT.)	CANADA 808 (1300) · 808 (1600)

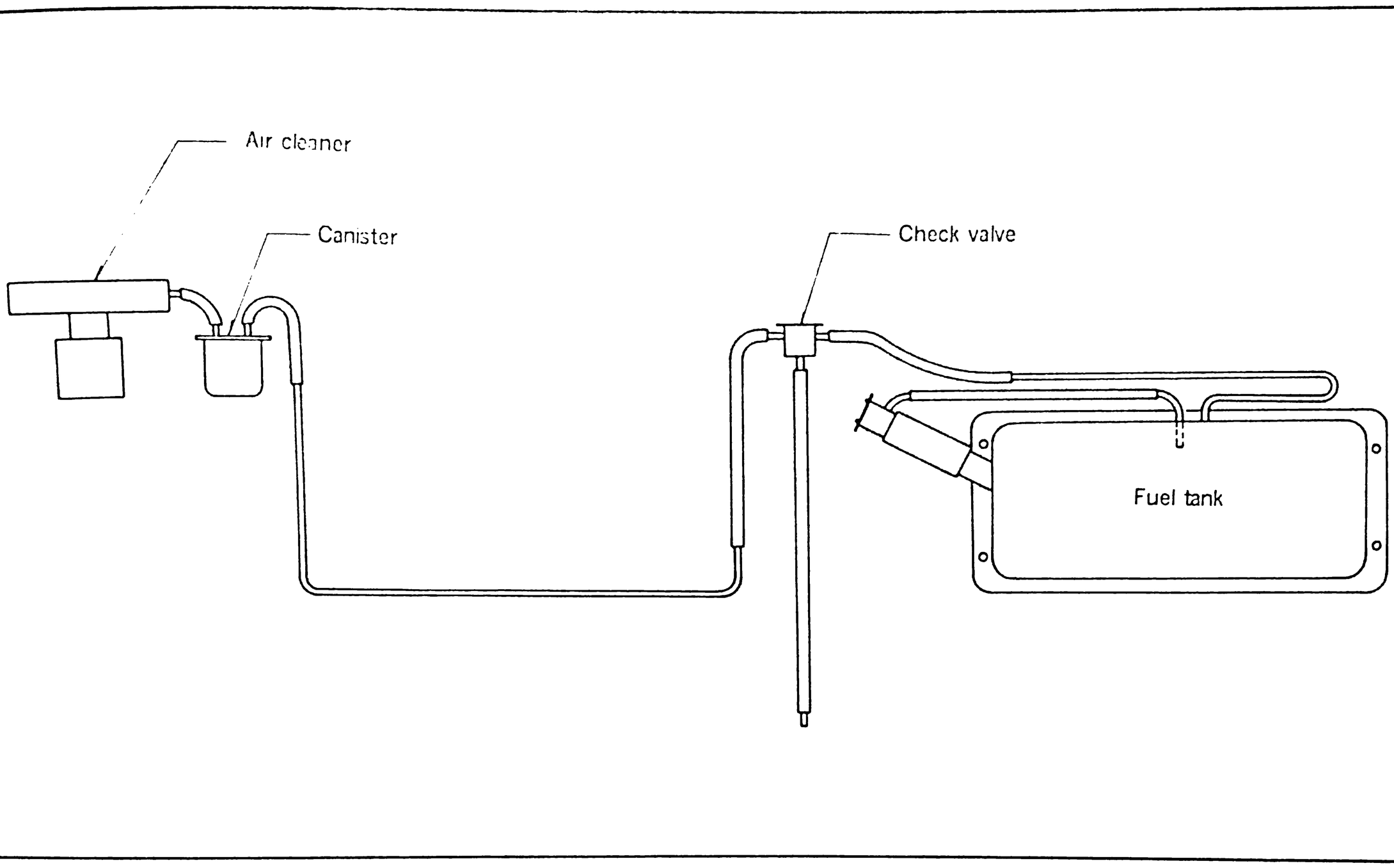

Fig. 2-41 1977 EVAP system (Sedan · Coupe)

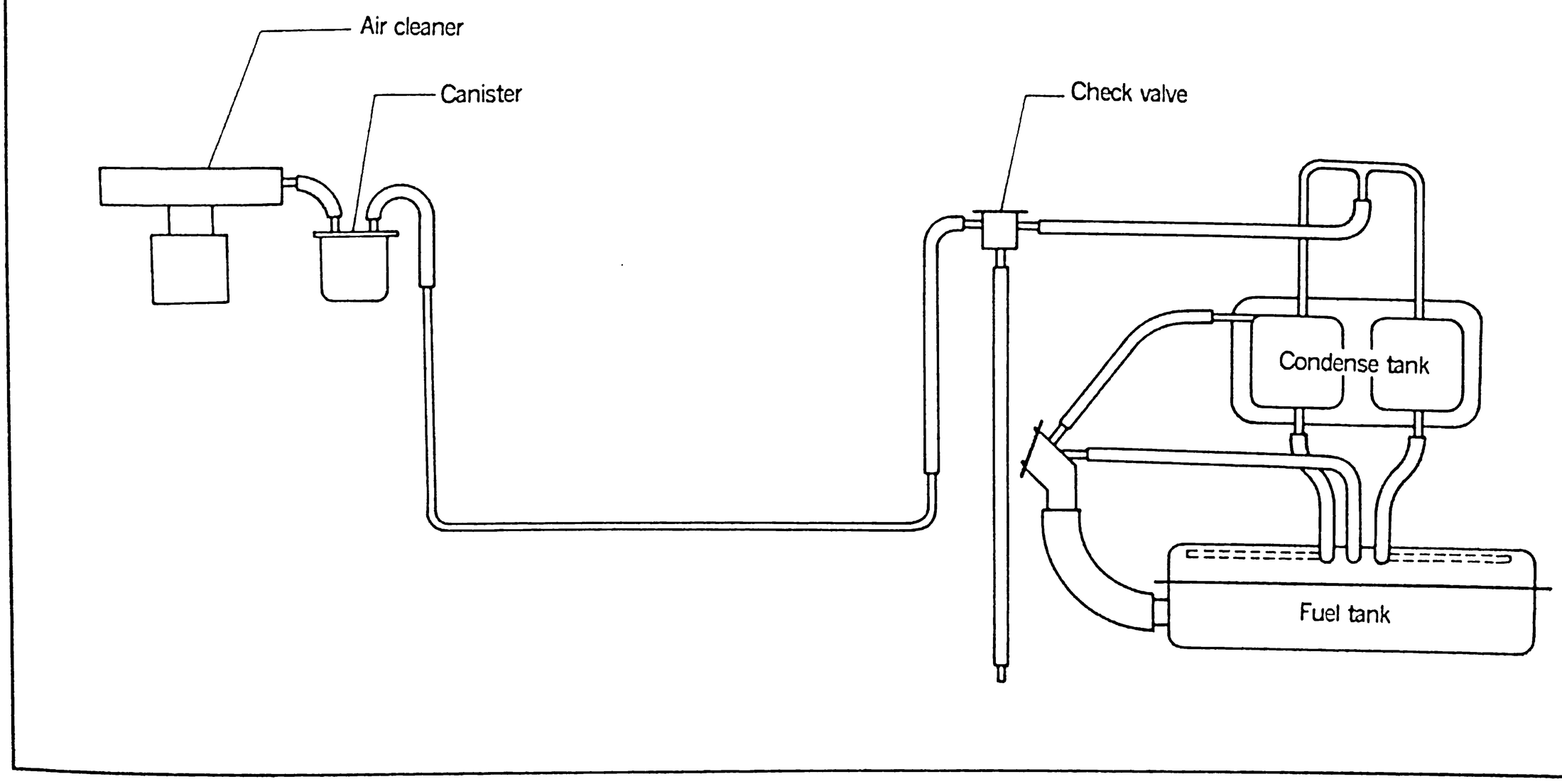

Fig. 2-42 EVAP system (Wagon)

CHECK VALVE CONFIGULATION

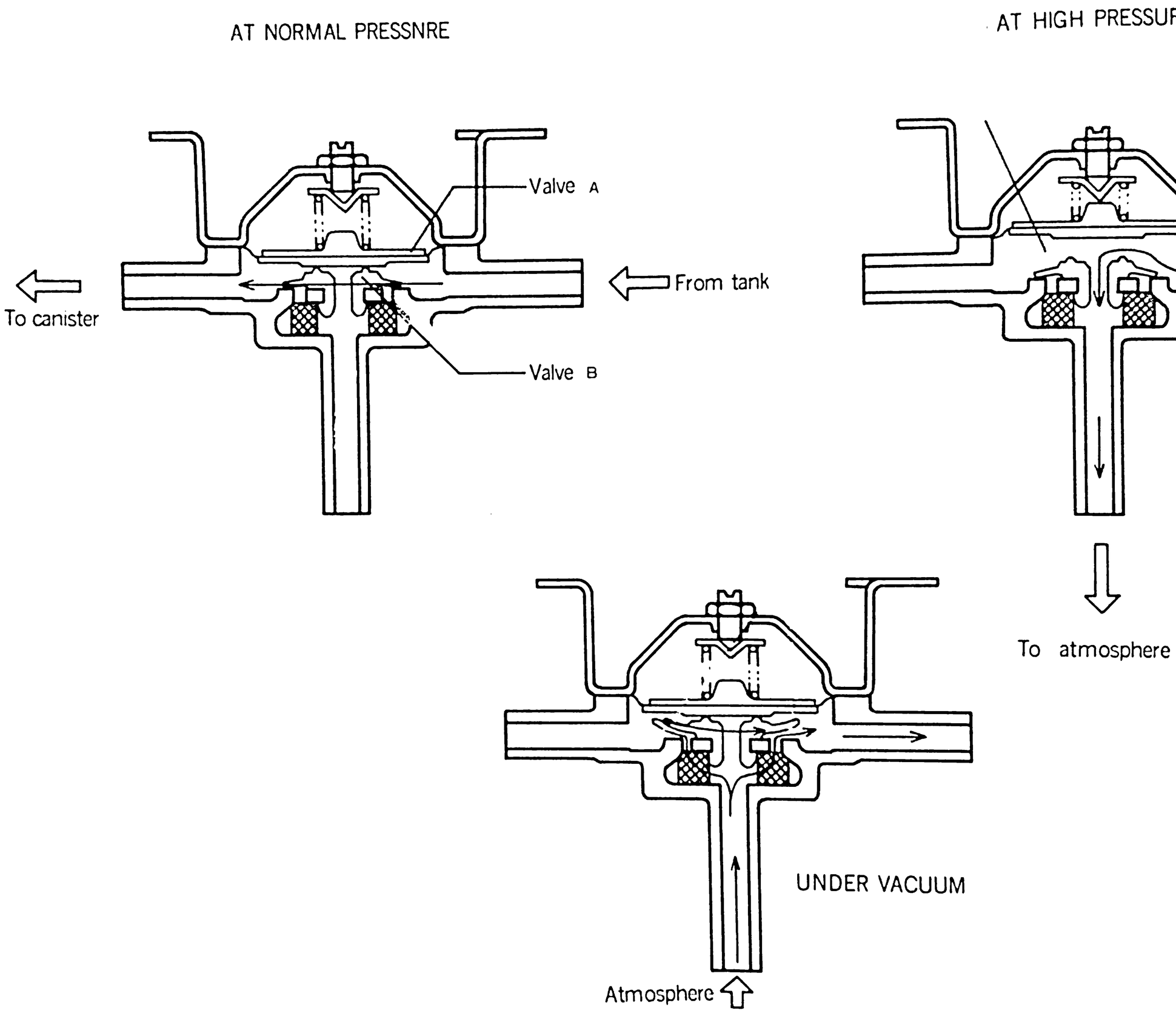

Fig. 2-43 Check valve

ROTARY ENGINE

RX-4
Cosmo

MAZDA ROTARY ENGINE
LICENCE: NSU–WANKEL

ROTARY ENGINE	CALIFORNIA · FEDERAL · CANADA
KEY CHANGE	RX-4 · Cosmo

KEY CHANGE

- The following items have been changed for 1977 year models.

ITEM	REF. PAGE
ENGINE	
○ THERMAL REACTOR	3–2
LUBRICATING SYSTEM	
○ OIL PUMP	3–3
○ OIL PAN	3–4
COOLING SYSTEM	
○ THERMOSTAT AND BY–PASS CONTROL VALVE	3–5
FUEL SYSTEM	
○ CARBURETOR'S INTRODUCTION	3–6
○ AIR VENT SYSTEM	3–7
○ FUEL INLET AND RETURN SYSTEM	3–8
○ CARBURETOR TRAY	3–9
○ CARBURETOR SPECIFICATION	3–10
○ IDLE SPEED AND ADJUSTMENT	3–11, 12
○ INTAKE MANIFOLD	3–13
○ VACUUM PORTS AROUND CARBURETOR	3–14, 15
ELECTRICAL SYSTEM	
○ DISTRIBUTOR	3–16
● IGNITION TIMING	3–17, 18

THERMAL REACTOR

DESCRIPTION

CALIFORNIA · FEDERAL · CANADA

RX-4 · Cosmo

DESCRIPTION

- The construction of the thermal reactor has been changed as shown in Fig. 3-1.
- The new type of thermal reactor is warmed up quicker in comparison with the old type and improves the exhaust emission when starting cold engine.

[BAFFLE is eliminated.
HEAT RING is newly equipped.
CAPACITY is changed from 2.5ℓ to 2.0ℓ.]

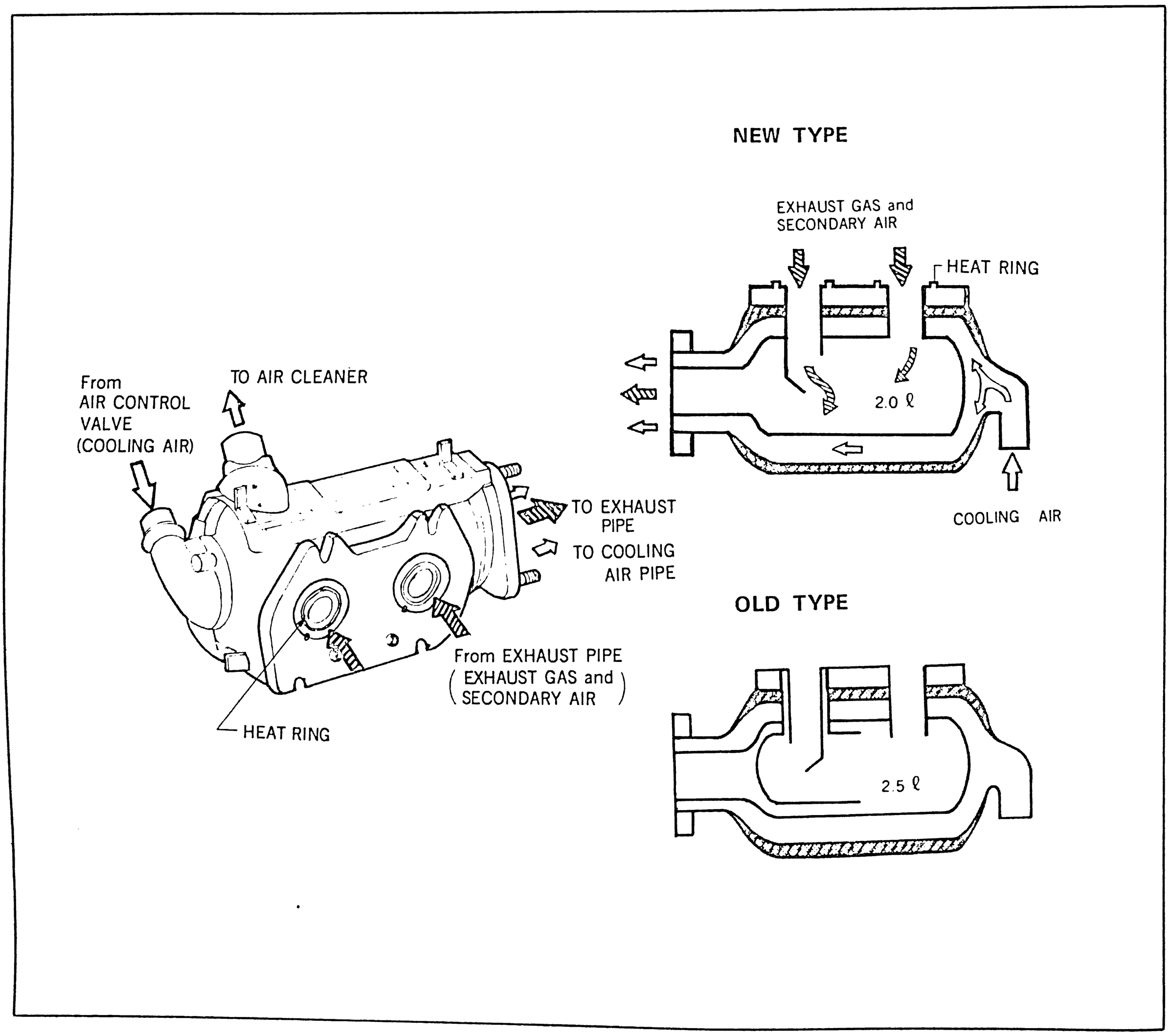

Fig. 3-1 Thermal reactor

OIL PUMP

DESCRIPTION · SERVICE SUMMARY

CALIFORNIA · FEDERAL · CANADA

RX-4 · Cosmo

DESCRIPTION

- Chain adjuster has been discarded.
- Oil pump driven sprocket has been heat-treated (hardening) to increase the strength.

SERVICE SUMMARY

- If the distance A exceeds 13 mm (0.51 in) when pushing the chain by hand, as shown in Fig. 3-2, replace the chain.

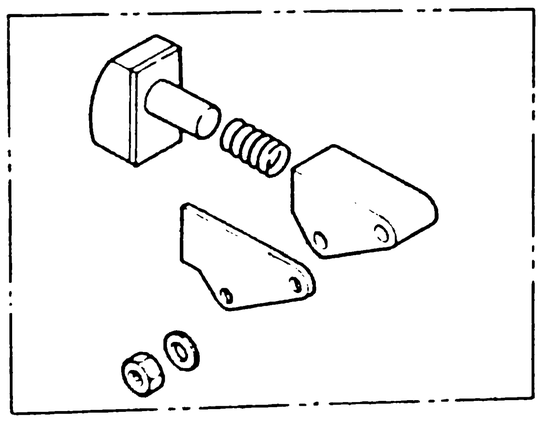

CHAIN ADJUSTER
is discarded

OIL PUMP DRIVEN SPROKET

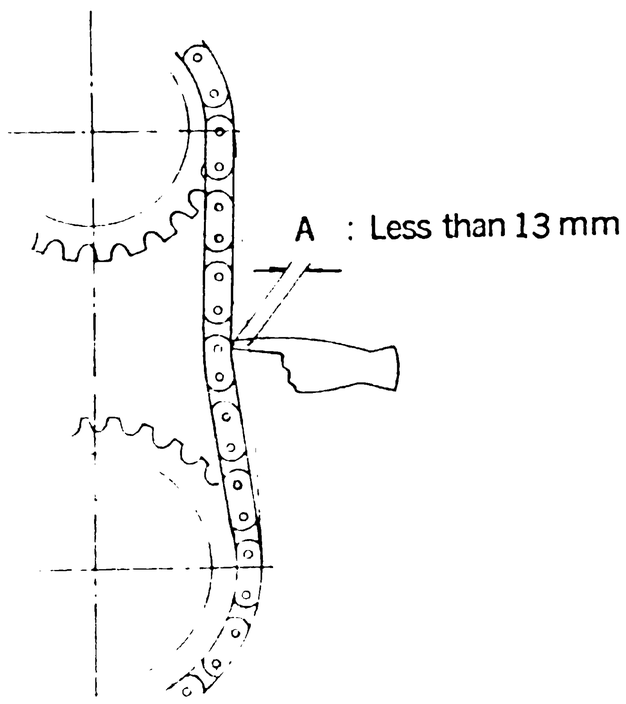

A : Less than 13 mm

Fig. 3-2 Oil pump components

OIL PAN

DESCRIPTION · SERVICE SUMMARY

CALIFORNIA · FEDERAL · CANADA

RX-4 · Cosmo

DESCRIPTION

- The oil pan gasket has been abolished.
- The sealing agent "SH780" is used instead of the gasket.

Sealing agent (Part number)	8527 23 035 (340 g)
	8527 23 045 (100 g)

SERVICE SUMMARY

- When replacing the oil pan, proceed the following procedures.

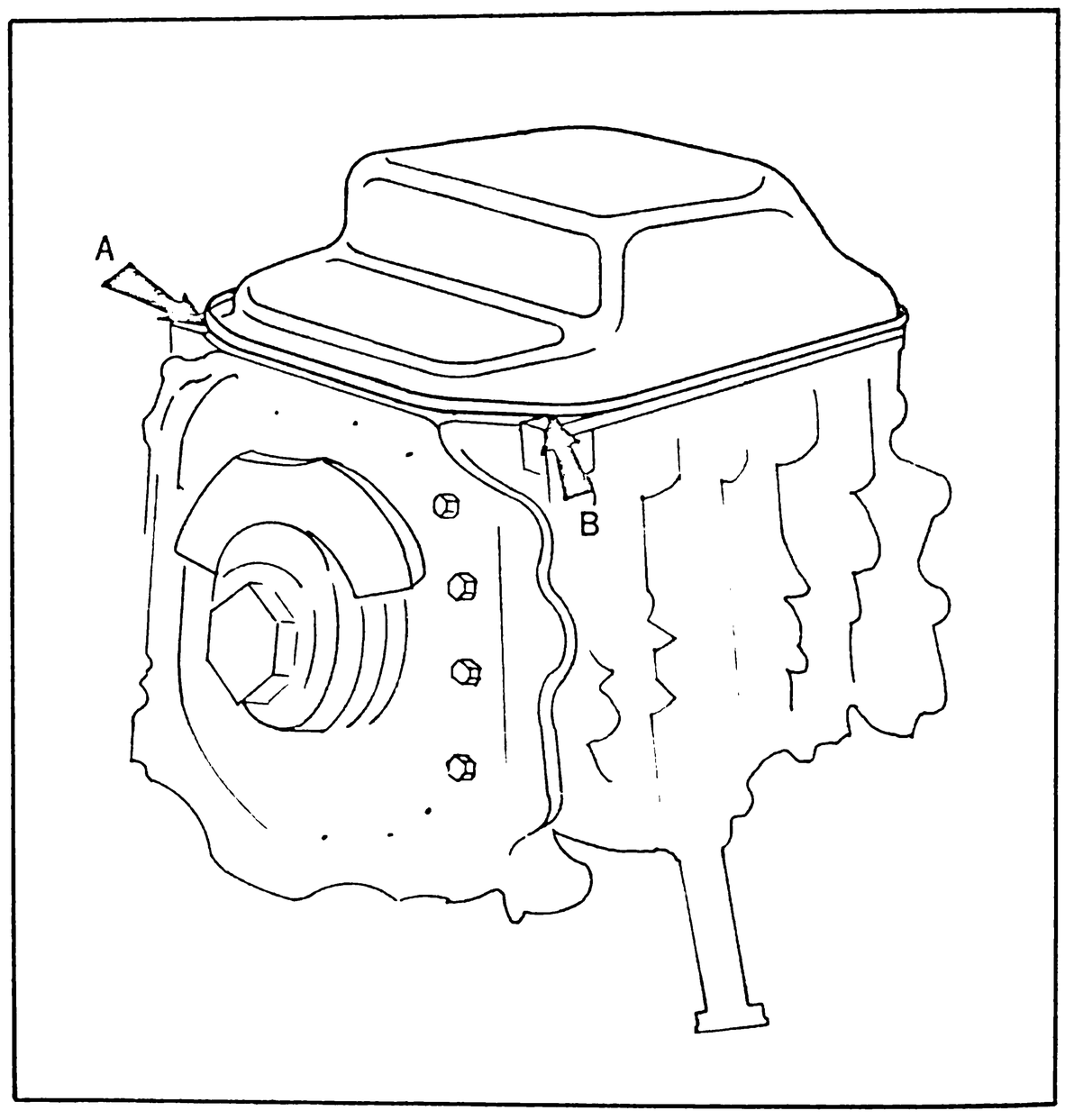

Fig. 3-3 Removing oil pan

[Removing Oil Pan]

1. Remove the bolts attaching the oil pan.
2. Insert the screw driver between the oil pan and the housings (the position A and B shown in Fig. 3-3) and pry off the oil pan.
3. Remove the sealing agent on the housings, however, the agent on the oil pan is unnecessary to remove.

[Installing Oil Pan]

1. Remove the dust and oil on the mounting surface of the oil pan and the housings.
2. Apply the sealing agent onto the mounting surface of the housings as shown in Fig. 3-4. The ends of the sealing agent should be overlapped.
3. Set the oil pan in place and tighten the bolts little by little in turn until the torque becomes 0.7~1.0m-kg (5~7 ft-lb) evenly.

NOTE:

Do not keep the container of the sealing agent without the cap.

Fig. 3-4 Installing oil pan

THERMOSTAT AND BY—PASS CONTROL VALVE

DESCRIPTION

CALIFORNIA · FEDERAL · CANADA

RX-4 · Cosmo

DESCRIPTION

- The jiggle pin has been eliminated from the thermostat.
- The by-pass control valve is also discarded.
- The thermostat operating temperature has been changed as shown in Fig. 3-5.

	OLD TYPE	NEW TYPE
Begin to open	88 ± 1.5°C (190 ± 35°F)	82 ± 1.5°C (180 ± 35°F)
Full open	100°C (212°F)	95°C (203°F)

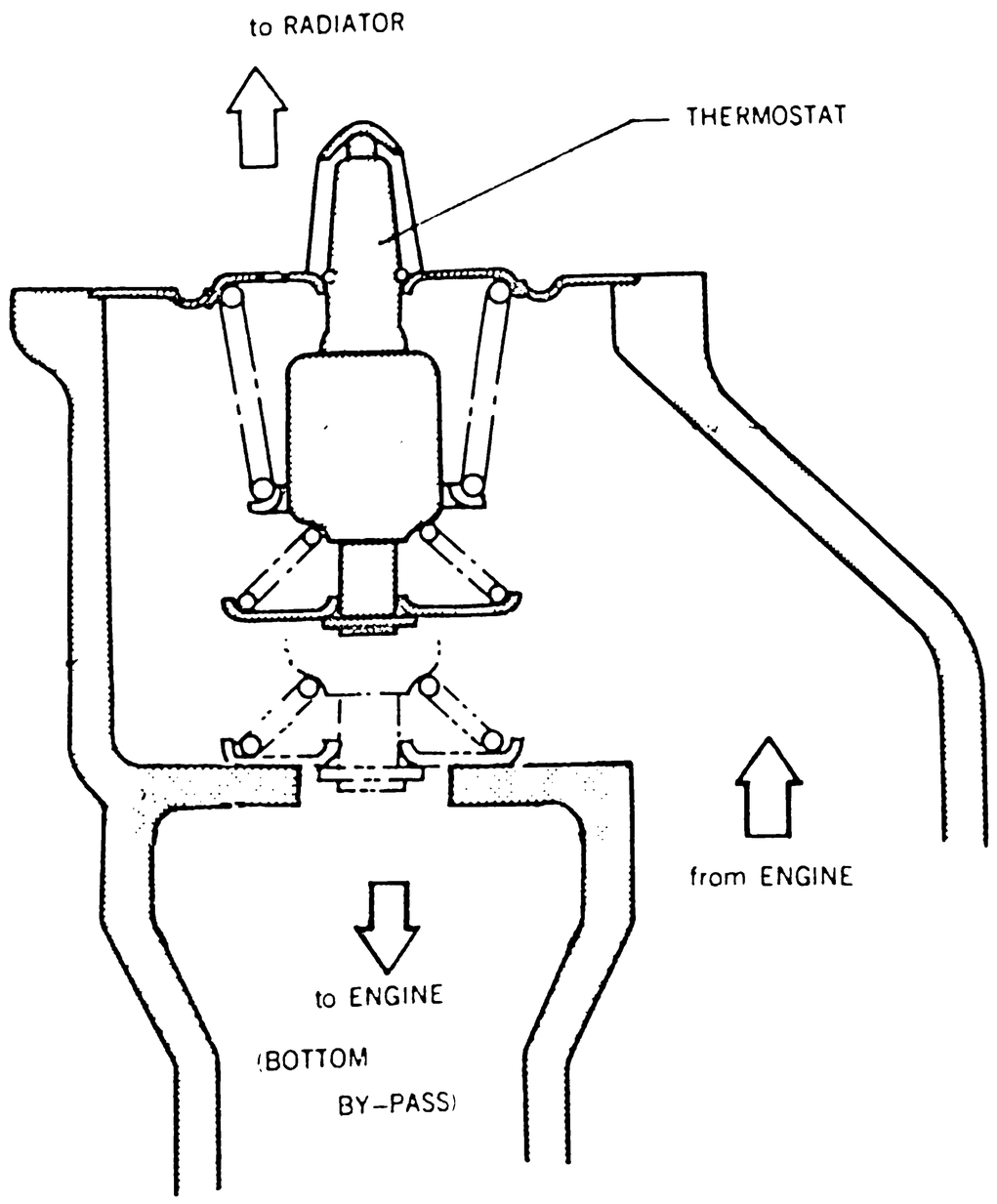

Fig. 3-5 Thermostat

CARBURETOR'S INTRODUCTION

DESCRIPTION

CALIFORNIA · FEDERAL · CANADA

RX-4 · Cosmo

DESCRIPTION

- AIR VENT SYSTEM is changed. (See page 3–7.)
  Inner air vent is reduced from four to one.
  Outer air vent (from float chamber to canister) is added.
  Air vent solenoid valve is installed.

- FUEL INLET AND RETURN SYSTEM is changed. (page 3–8)
  Fuel inlet pipe is installed at outside of carburetor.

- CARBURETOR TRAY is newly installed. (page 3–9)

- JETS, AIR BLEEDS AND VENTURI is changed. (page 3–10)

- IDLE LIMITER CAP is installed and IDLE SPEED is changed. (page 3–11, 12)

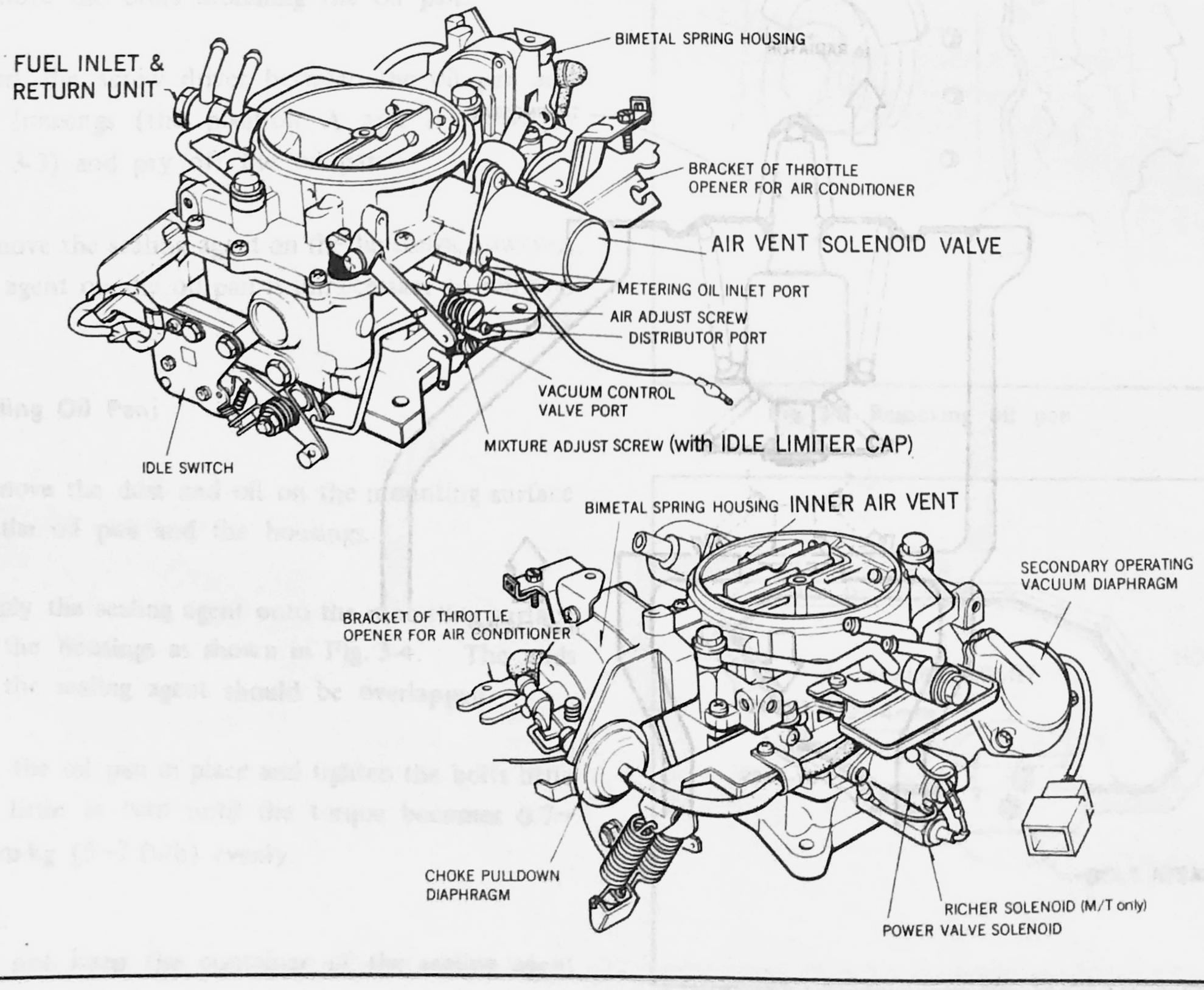

Fig. 3-6 Carburetor

AIR VENT SYSTEM

DESCRIPTION

CALIFORNIA · FEDERAL · CANADA

RX-4 · Cosmo

DESCRIPTION

To improve the engine startability when engine is in hot conditon, an air vent solenoid valve has been newly installed on the carburetor. And the number of the air vents has been reduced from four to two. One of the vent is located at inside of the air horn—inner air vent—and the other is at the canister—outer air vent. An air vent hose for outer air vent is connected from the air vent solenoid valve to the canister.

While the vehicle is parked short period of time subsequent to the long period of driving, there is a tendency that the fuel in the float chamber evaporates and enters into the intake manifold through the air vent. Thus, the air-fuel mixture will become rich and is difficult to start.

To prevent this condition, the air vent solenoid valve closes the passage to the inner air vent and opens the passage to the canister when the ignition switch is turned off. Therefore, the fuel evaporated from the float chamber is led into the canister to trap and is not entered into the intake manifold.

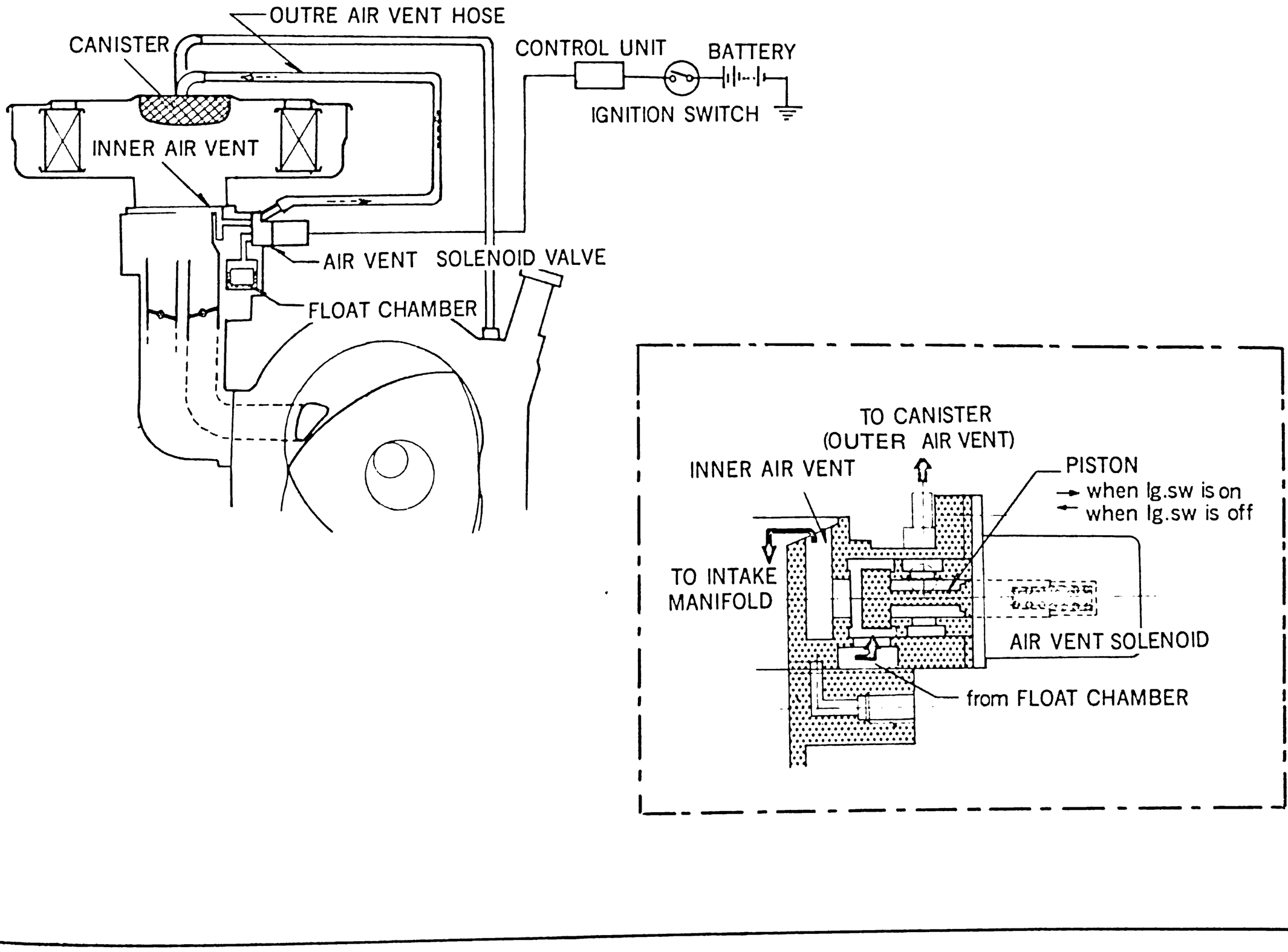

Fig. 3-7 Air vent system

FUEL INLET AND RETURN SYSTEM

DESCRIPTION

CALIFORNIA · FEDERAL · CANADA

RX-4 · Cosmo

DESCRIPTION

To improve the engine stability when engine is in hot condition, the fuel inlet and return unit have been redesigned. The new fuel inlet passage for the float chamber has been provided on the outside of the carburetor. The old type of fuel inlet passage has been changed to the fuel return passage.

New fuel inlet passage routed to the outside of the carburetor lowers the temperature of the fuel in the line in comparison with the old type.
On this account, the fuel evaporated from the float chamber will decrease and improve the engine stability when engine is in hot condition.

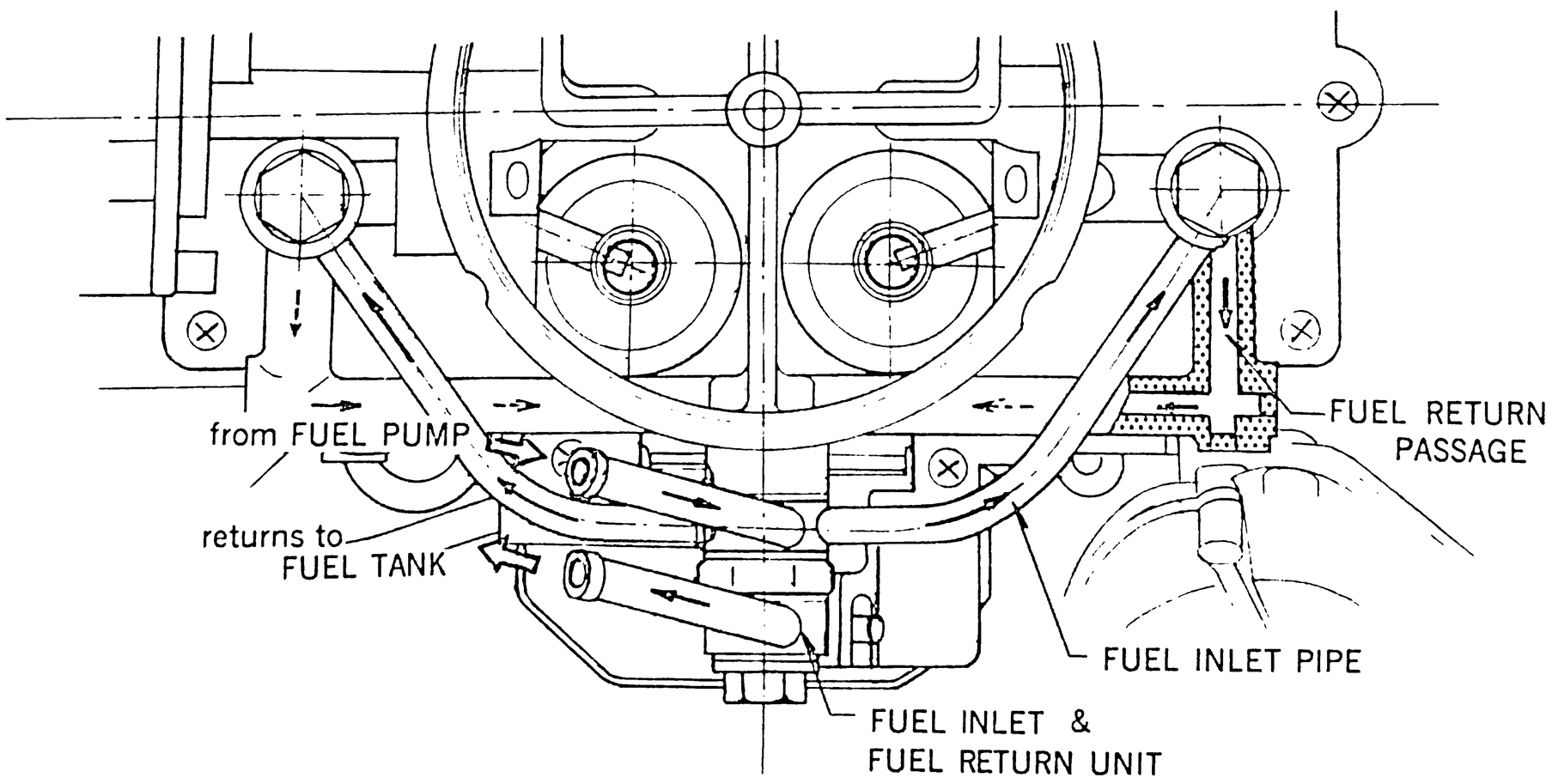

Fig. 3-8 Fuel inlet and return system

CARBURETOR TRAY

DESCRIPTION

CALIFORNIA · FEDERAL · CANADA

RX-4 · Cosmo

DESCRIPTION

Carburetor tray is newly installed between the carburetor insulator and the intake manifold.

This tray will protect the carburetor from the heat effects from the thermal reactor and minimizing evaporation of fuel in the carburetor. Thus, it will improve the engine startability when engine is in hot condition.

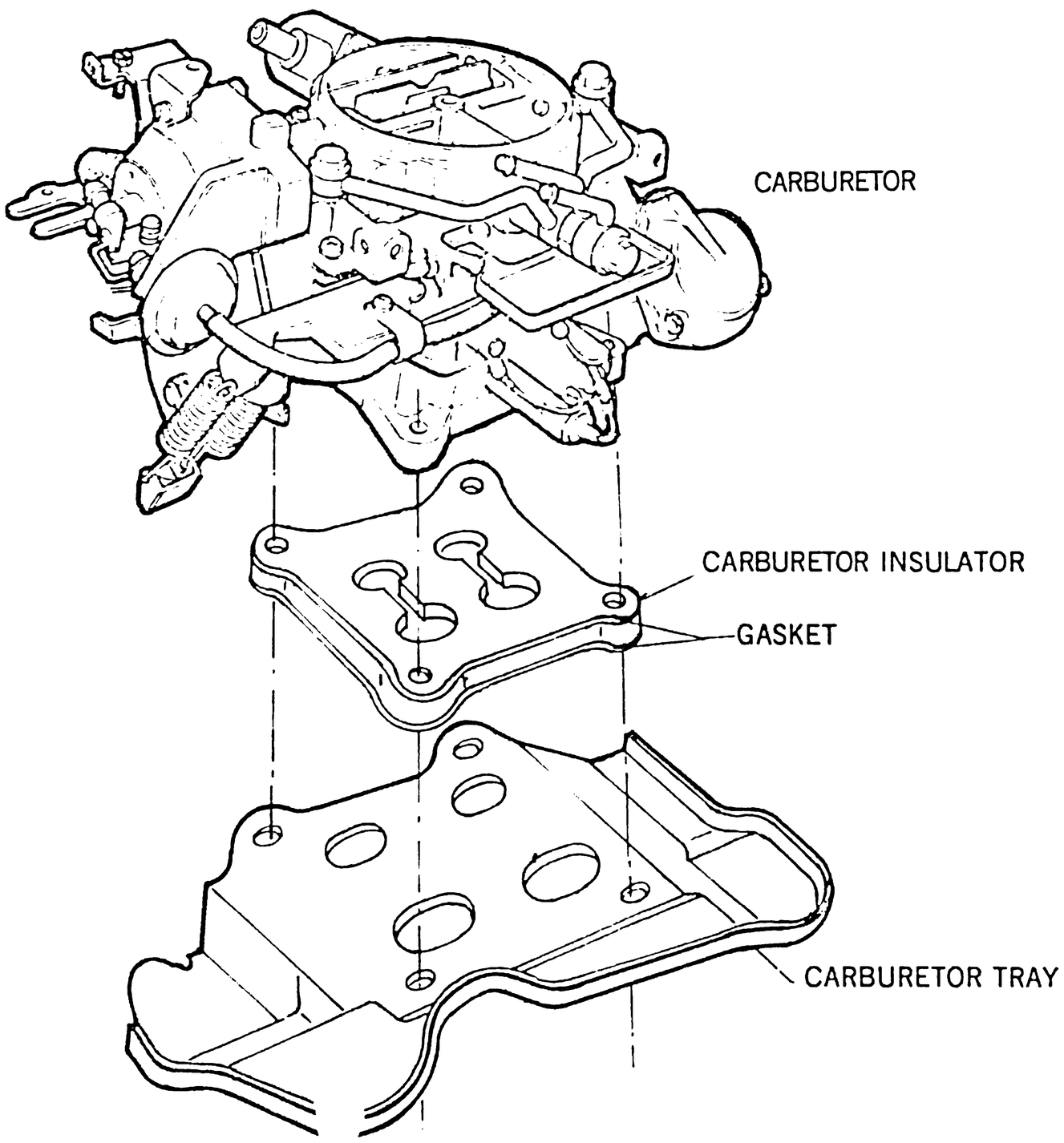

Fig. 3-9 Carburetor tray

CARBURETOR SPECIFICATION

DESCRIPTION

CALIFORNIA · FEDERAL · CANADA

RX-4 · Cosmo

DESCRIPTION

- The size of the jets, air bleeds and venturi have been altered as shown in a table below.

Also, the idle speed has been changed for '77 year models.

Venturi diameter	P	20 x 13 x 6.5 mm (0.79 x 0.51 x 0.26″)
	S	28 x 10 mm (1.10 x 0.39″)
Main jet	P	#91 *
	S	#145 *
Main air bleed	P	#65 *
	S	#100 *
Slow jet	P	#42
	S	#80
Slow air bleed	P	#200
	S	No. 1: #120, No. 2: #80 *

Richer jet		#45 (M/T only)
Richer air bleed		#120 *
Power jet		#45 (Ex. Fed.–M/T) *
Vacuum jet	P	2.2 mm
	S	#110 *
Idle speed	A/T (D range)	750±25 rpm *
	M/T (Neutral)	

NOTE:

* shows alteration

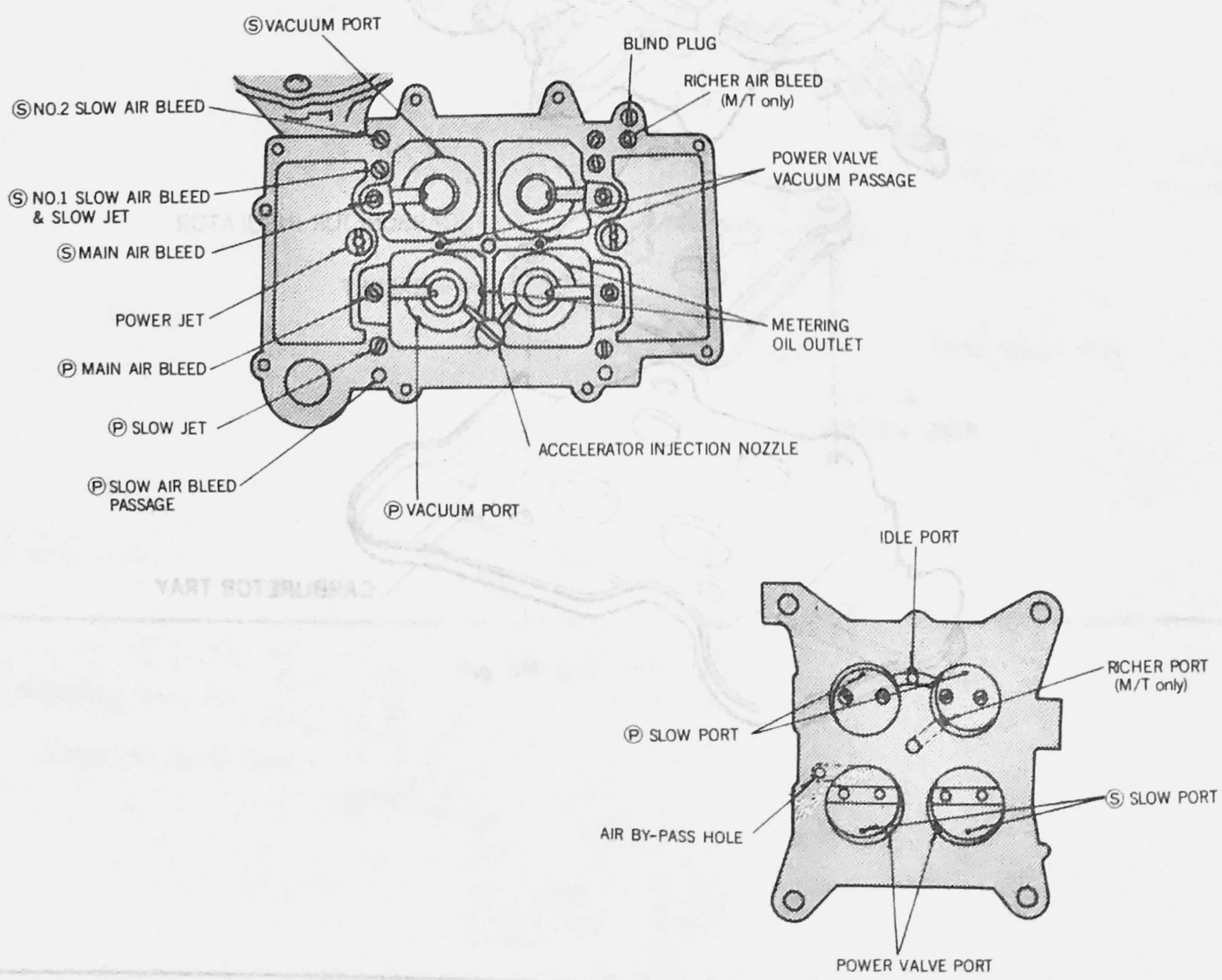

Fig. 3-10 Location of air bleeds, jets and ports

IDLE SPEED AND MIXTURE	CALIFORNIA · FEDERAL · CANADA
ADJUSTMENT	RX-4 · Cosmo

ADJUSTMENT

A) Pre-condition for idle adjustment

- Warm up the engine to normal operating temperature. Then run the engine at 2000 rpm in Neutral for about 3 minutes.
- Turn off all accessories.
- Remove the fuel filler cap.
- Plug the idle compensator hose.
- Set CO meter to exhaust pipe.
- Set the tachometer.

NOTE:

- Set the parking brake and block the wheel.
- Blow the engine room with the additional cooling fan if available.
- Do not use the tachometer equipped on the vehicle.

B) If the idle speed is not within the specification, adjust the idle speed to 750 rpm by turning the air adjust screw. If the CO concentration is less than 0.1 % and the engine operation is stable after the above procedure, the idle mixture adjustment is not required.

C) If necessary, adjust the idle mixture as follows.

(1) Remove the idle limiter cap (Plastic cap) from the mixture adjust screw (MAS).
(2) Turn MAS clockwise until the engine hunts severely.
(3) Then turn MAS counter-clockwise in small steps until CO decreases to 0.1 %
(Do not overturn MAS to get CO less than 0.1 %)
(4) From that position, turn MAS counter-clockwise 1/4 turn. (Idle CO should be less than 0.1 % after these adjustments.)
(5) If the idle speed shifts from the specified rpm as the result of the above procedure, adjust the idle speed and repeat the procedure (2)~(5).
(6) Insert the idle limiter cap to fix the MAS position.

IDLE SPEED AND MIXTURE ADJUSTMENT (CONT.)	CALIFORNIA · FEDERAL · CANADA RX-4 · Cosmo

ADJUSTMENT (CONT.)

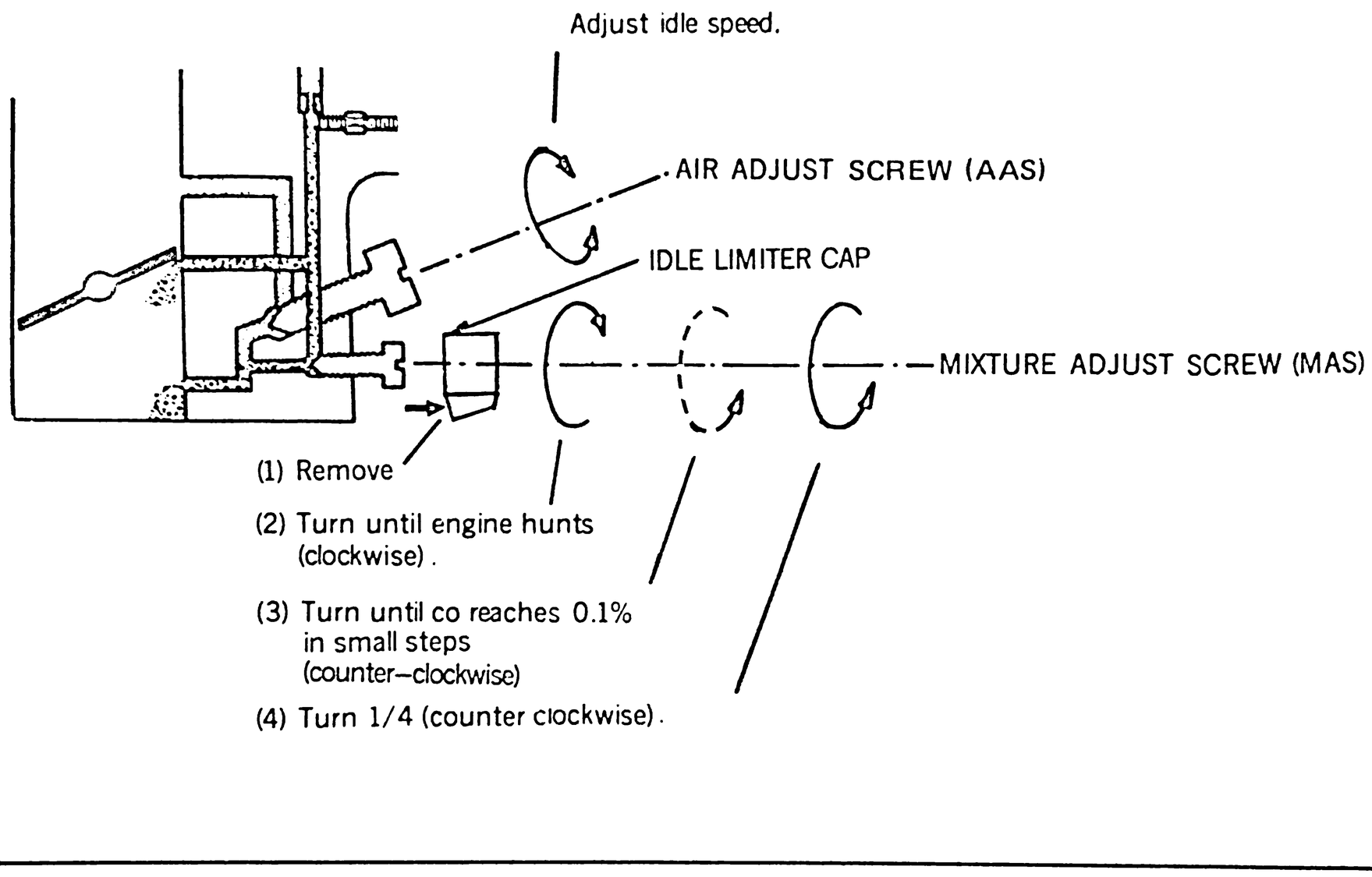

Fig. 3-11 Idle mixture adjusting procedure

INTAKE MANIFOLD

DESCRIPTION

CALIFORNIA · FEDERAL · CANADA

RX-4 · Cosmo

DESCRIPTION

- The configuration of the intake manifold has been changed in reverse position in comparison with '76 models.
- The fuel passage has been provided between primary and secondary port.
  (Carburetor insulator also has been changed in accordance with above modifications.)

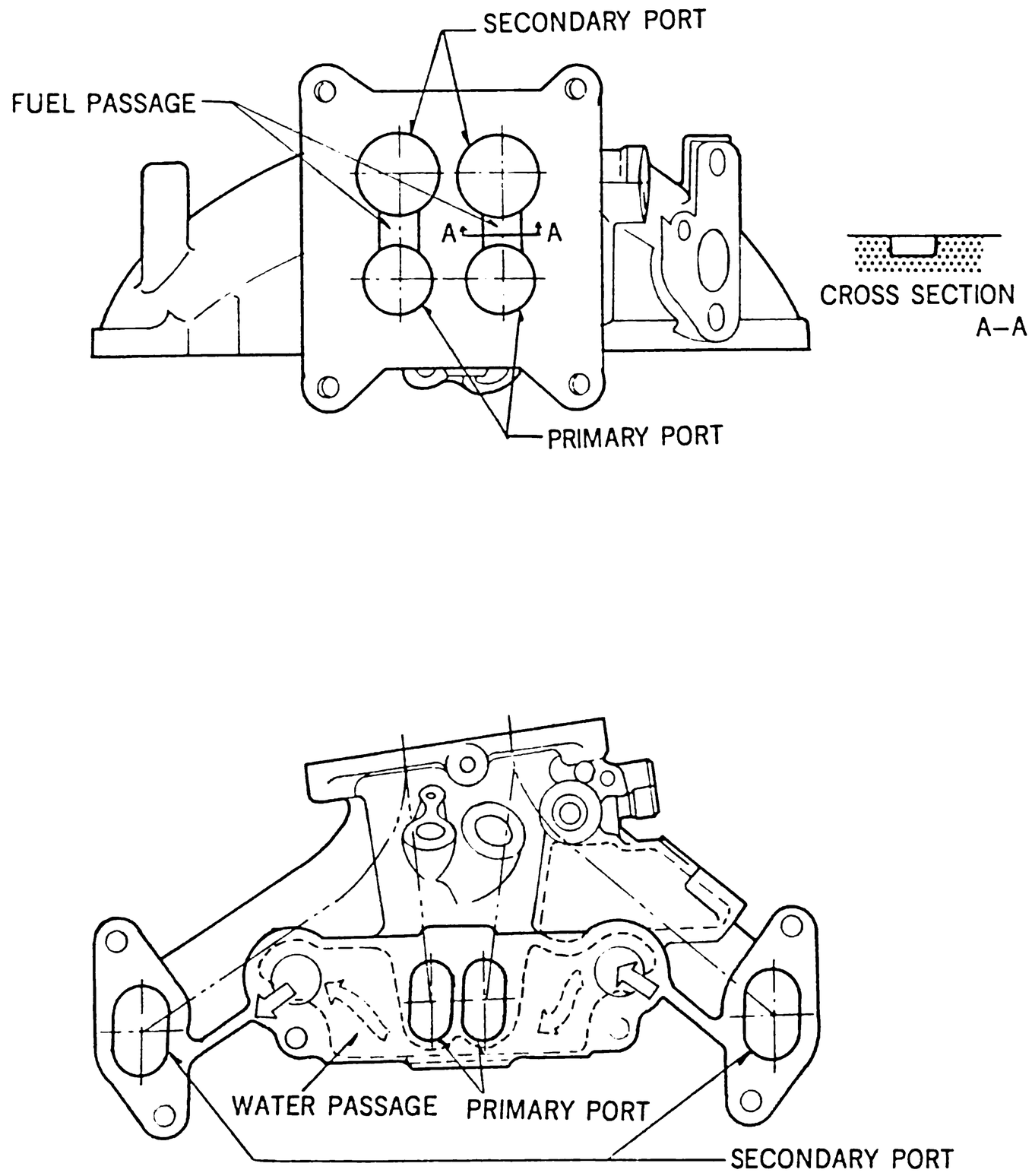

Fig. 3-12 Intake manifold

VACUUM PORTS AROUND CARBURETOR

DESCRIPTION

CALIFORNIA · FEDERAL

RX-4 · Cosmo

DESCRIPTION

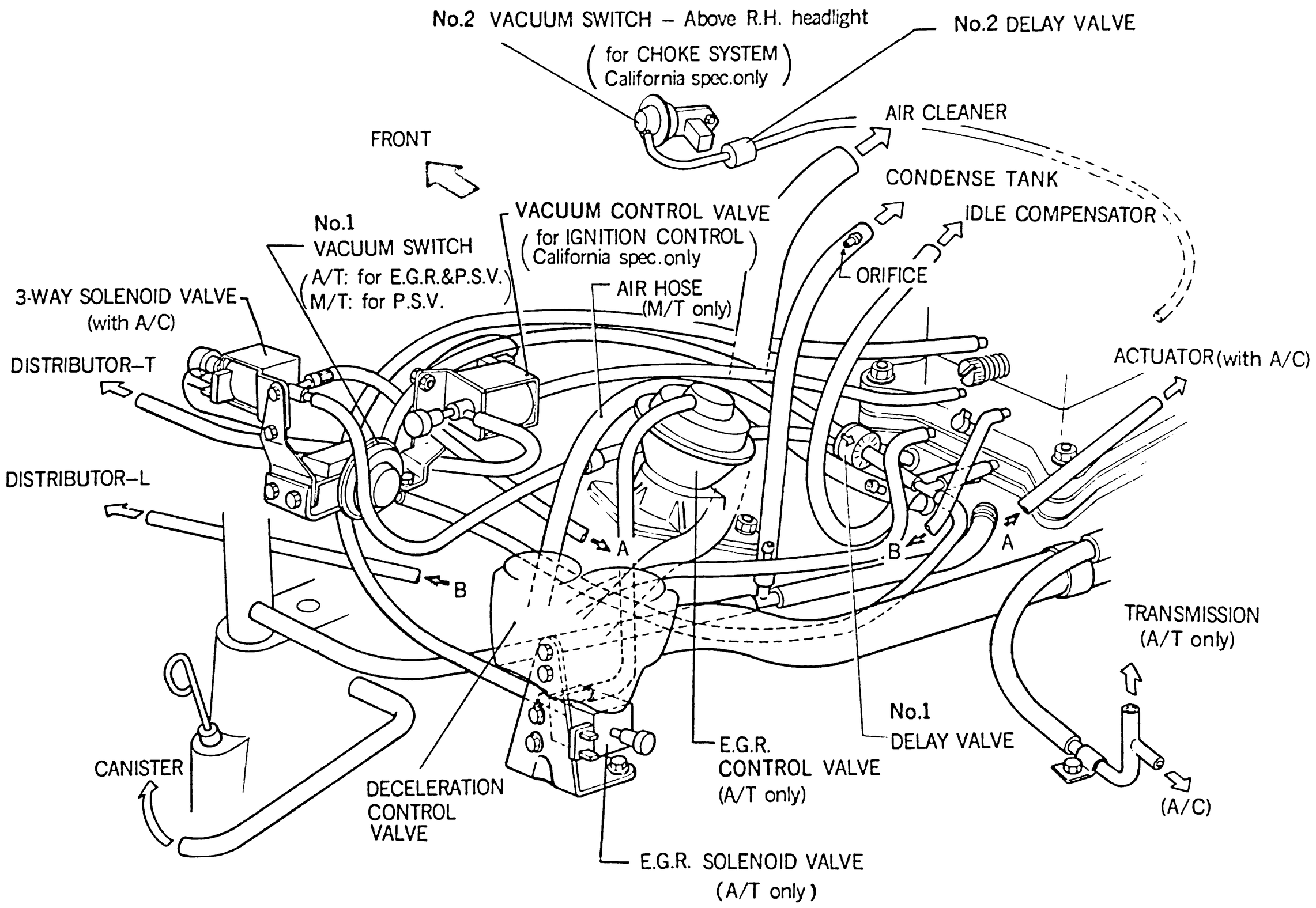

APPLICATION: – CALIFORNIA –

RX-4 and Cosmo with manual and automatic transmission

– FEDERAL –

RX-4 and Cosmo with automatic transmission

Fig. 3-13 Vacuum ports around carburetor

VACUUM PORTS AROUND CARBURETOR

FEDERAL · CANADA

DESCRIPTION

RX-4 · Cosmo

DESCRIPTION

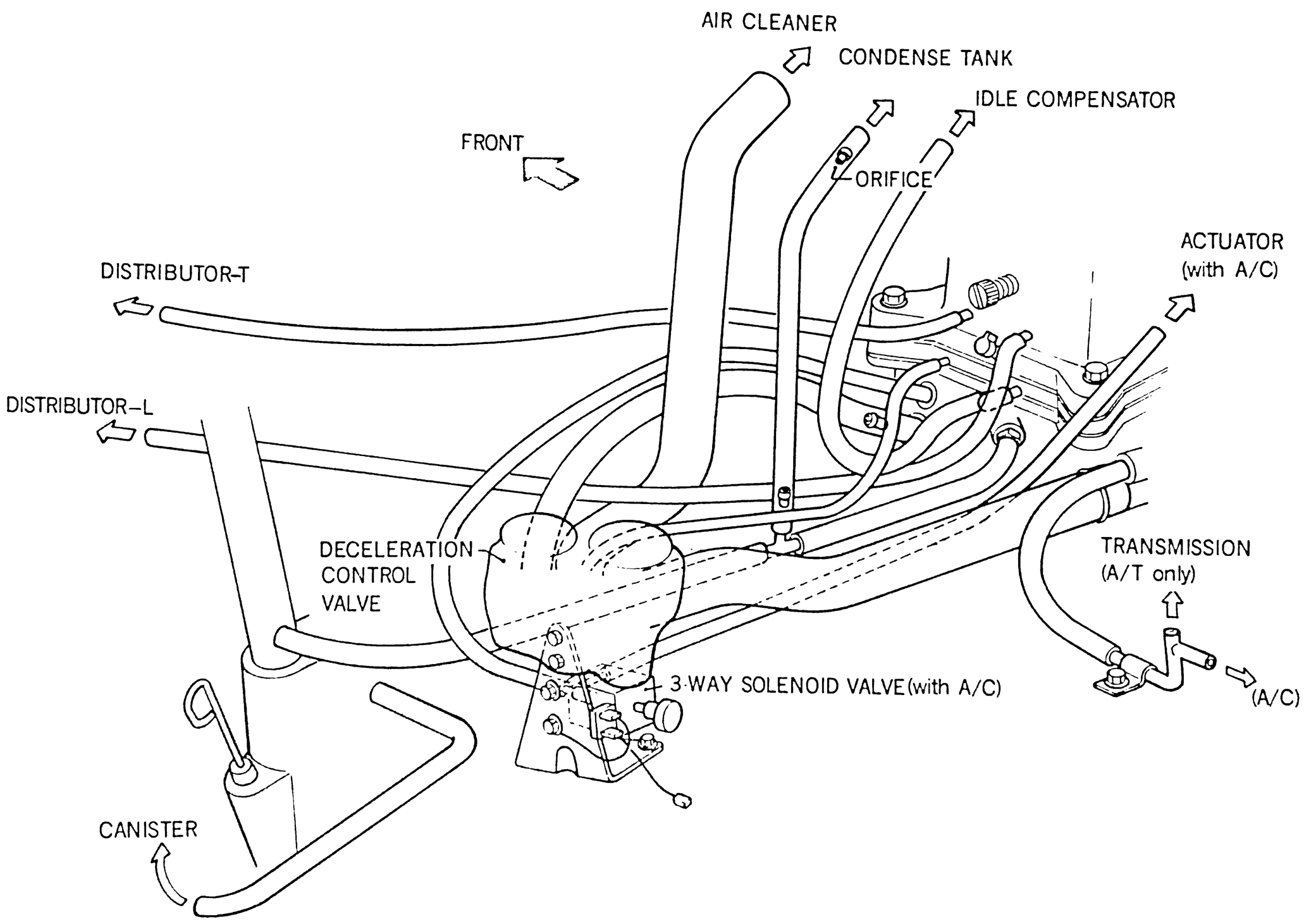

APPLICATION: – FEDERAL –

RX-4 and Cosmo with manual transmission

– CANADA –

RX-4 and Cosmo with manual and automatic transmission

Fig. 3-14 Vacuum ports around carburetor

DISTRIBUTOR

DESCRIPTION	CALIFORNIA · FEDERAL · CANADA
	RX-4 · Cosmo

DESCRIPTION

- The number of the contact points has been reduced from three to two (Leading and Trailing). (The contact point for leading retard has been eliminated.)

- Ignition timing has been changed as follows.

Initial timing

Leading	5° ± 1° ATDC at idle speed
Trailing	25° ± 4° ATDC at idle speed

- Distributor advancing characteristic is shown Fig. 3-15.

CENTRIFUGAL ADVANCE

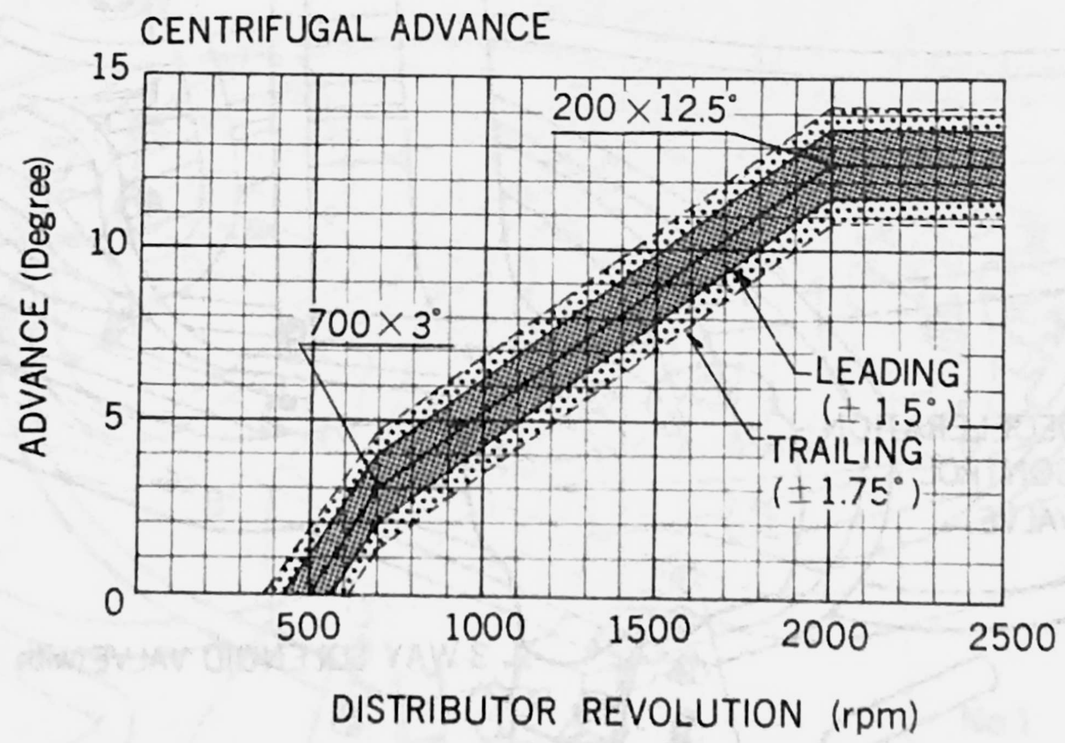

VACUUM ADVANCE

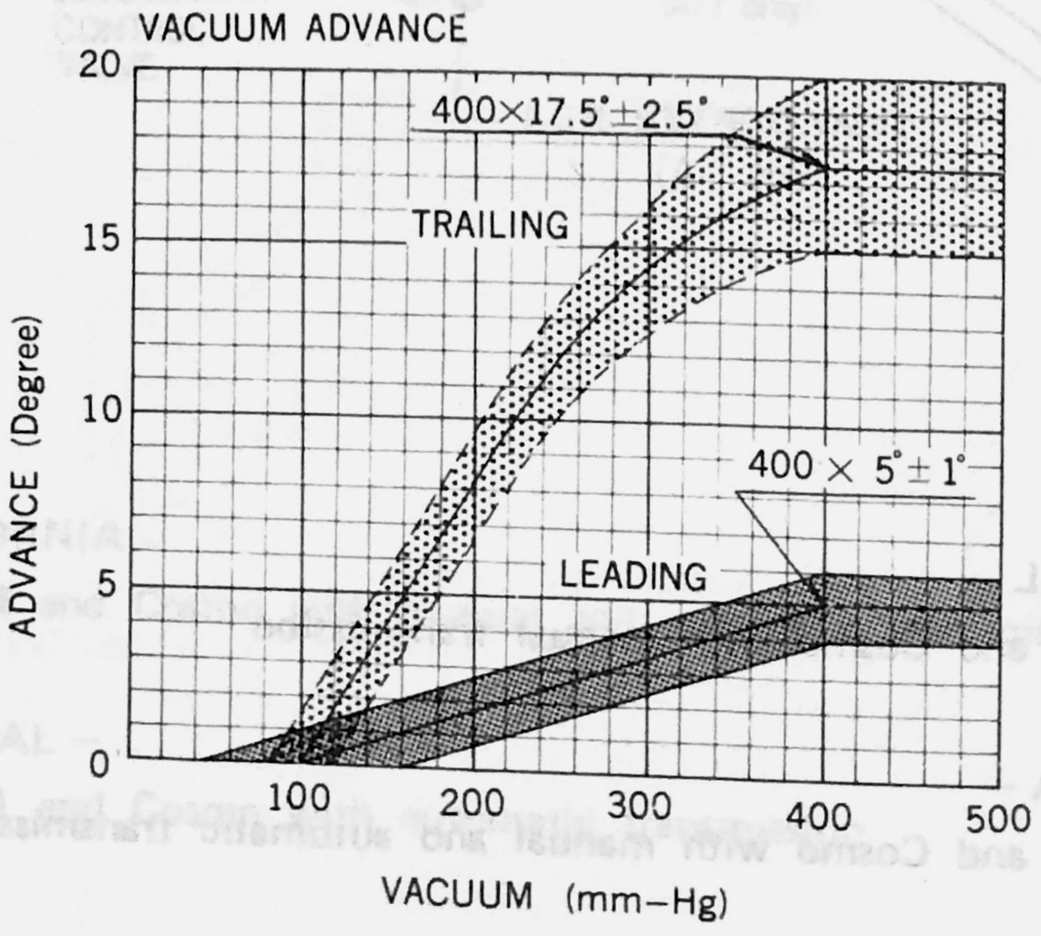

Fig. 3-15 Distributor advancing characteristic

IGNITION TIMING

ADJUSTMENT

CALIFORNIA · FEDERAL · CANADA

RX-4 · Cosmo

ADJUSTMENT

- Checking and adjusting the ignition timing are as follows.

STEP–1

1. Check the point gap for both leading and trailing points. If necessary, adjust as specified.

2. Fully warm up the engine and run it at the specified idle speed.

3. Check the leading ignition timing. If necessary, adjust it by rotating the distributor housing.

4. Check the trailing ignition timing which is within the specified range. If not, proceed to STEP–2.

STEP–2

5. Adjust the trailing ignition timing by rotating the distributor housing.

6. Adjust the leading ignition timing by moving the breaker base in the distributor.

7. Then adjust the leading ignition timing more accurately by rotating the distributor housing.

   And check the trailing ignition timing which is within the specified range. If not, repeat the procedure in STEP–2.

Adjustment standard

	Leading	Trailing
Ignition timing	−5 ± 1°	−25 ± 4°
Idle speed	750 ± 25 rpm (M/T . . in neutral, A/T . . in "D" range)	
Contact point gap	0.45 ± 0.05 mm	
Dwell angle	58 ± 3°	

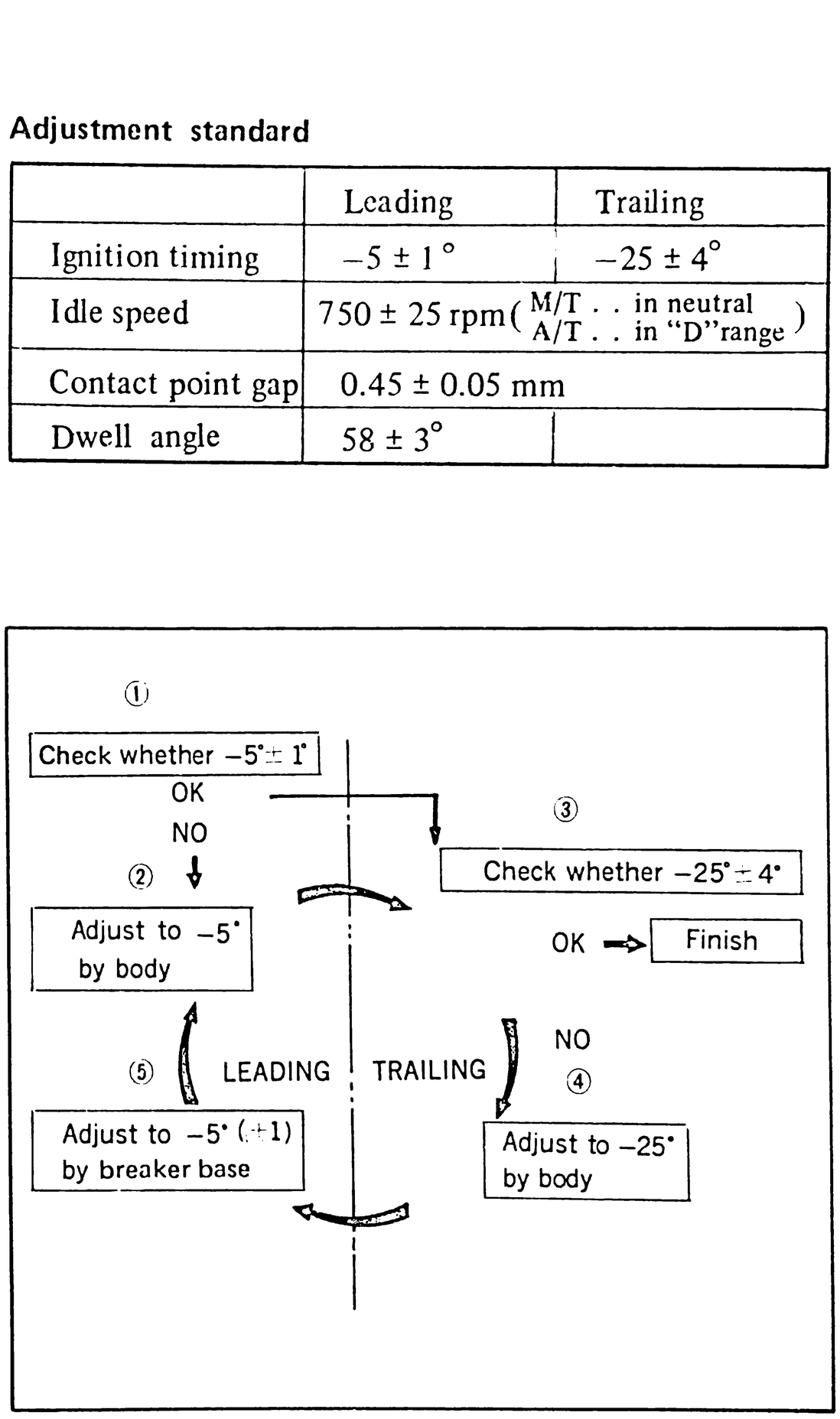

Fig. 3-16 Ignition timing adjusting procedure

NOTE:

- Turning the distributor housing clockwise, advances both leading and trailing ignition timing.
- Turning the breaker base clockwise, advances the leading ignition timing.

IGNITION TIMING

ADJUSTMENT (CONT.)

CALIFORNIA · FEDERAL · CANADA

RX-4 · Cosmo

ADJUSTMENT (CONT.)

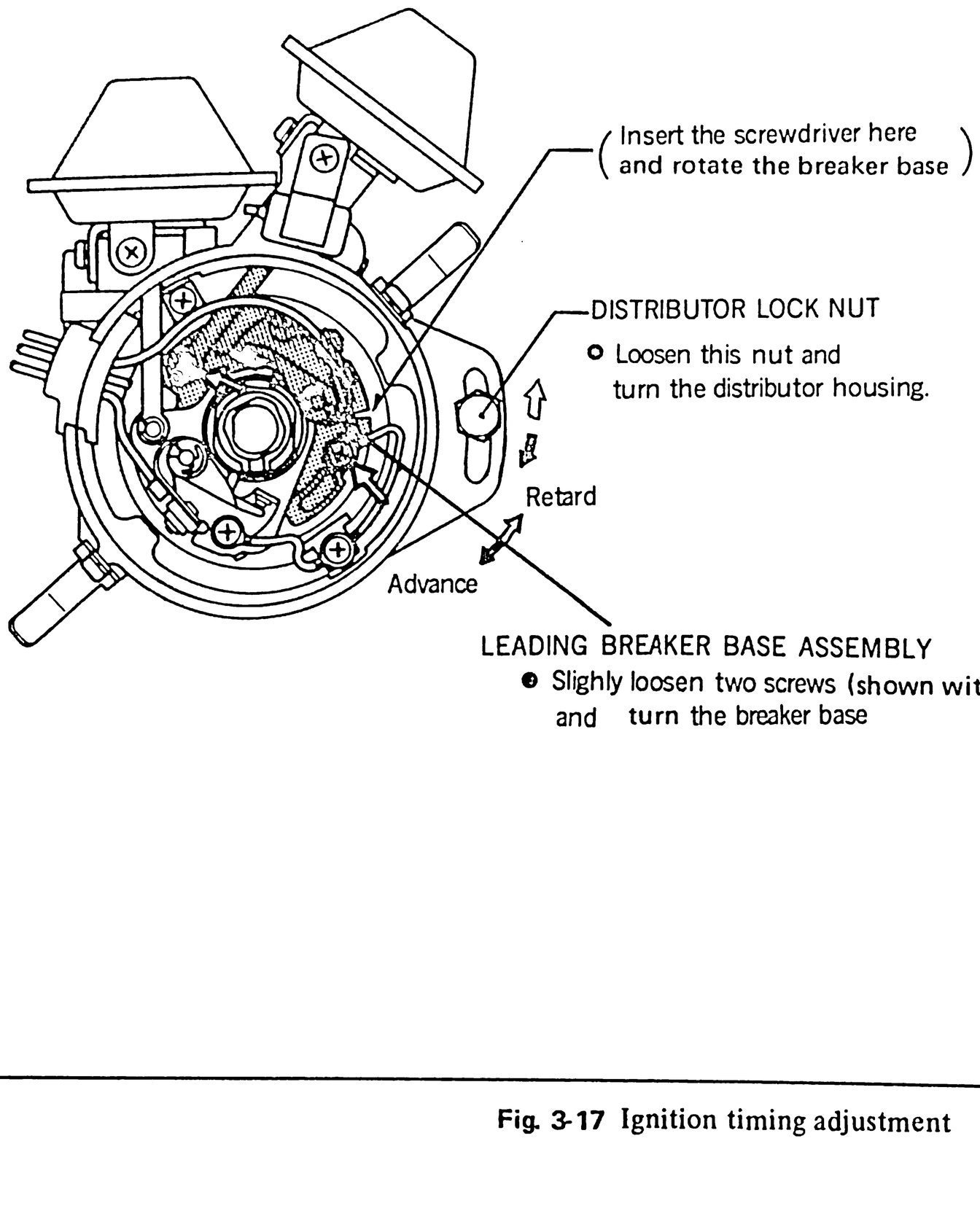

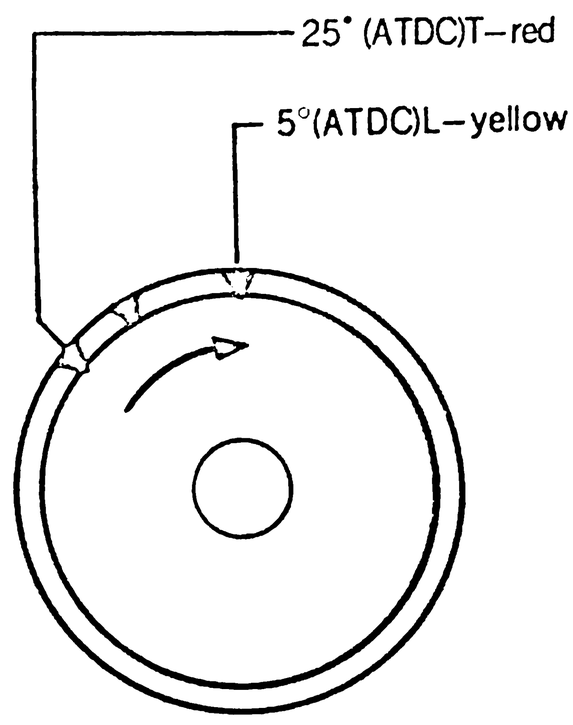

(Timing marks on pulley)

Fig. 3-17 Ignition timing adjustment

4

EMISSION CONTROL SYSTEM

RX-4
Cosmo

MAZDA ROTARY ENGINE
LICENCE: NSU–WANKEL

EXHAUST EMISSION STANDARD

KEY CHANGE

FEDERAL · CANADA
CALIFORNIA

RX-4 · Cosmo

KEY CHANGE

- The 1977 and 1976 exhaust emission standards are as shown in the table below.
  PASSENGER CARS: (Grams/mile)

	1977 Standard			1976 Standard		
	HC	CO	NOx	HC	CO	NOx
FEDERAL	1.5	15	2.0	1.5	15	3.1
CALIFORNIA	0.41	9	1.5	0.9	9	2.0
CANADA	2.0	25	3.1	2.0	25	3.1

- As shown in the table above, 1977 Federal NOx level and California NOx and HC levels are more stringent in comparison with 1976 levels.

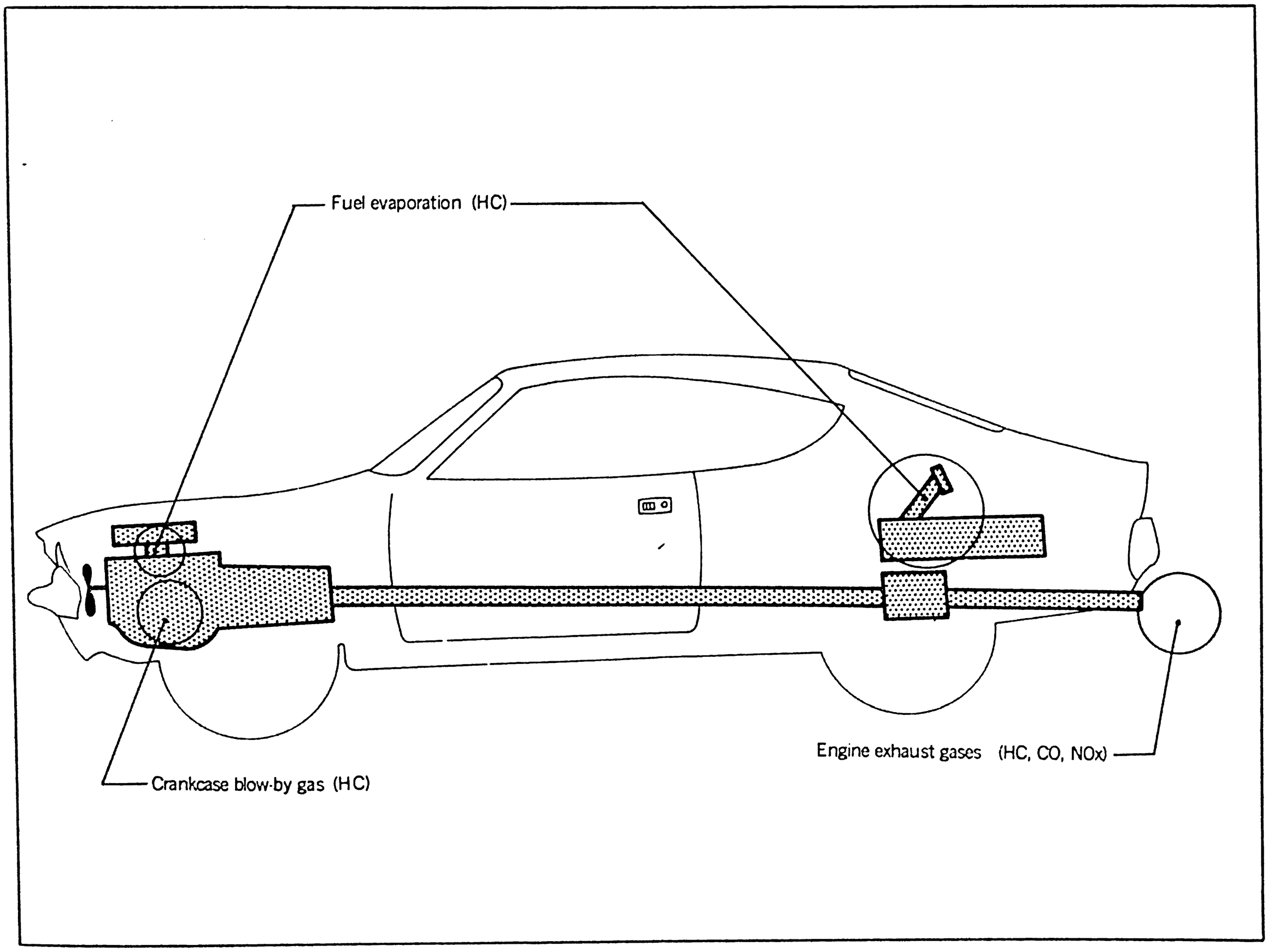

Fig. 4-1 Vehicle emission

EMISSION CONTROL SYSTEM

FEDERAL · CANADA

KEY CHANGE

RX-4 · Cosmo

KEY CHANGE

- A part of emission control system has been changed to satisfy the 1977 Federal requirement and to improve the fuel consumption, as shown in the following table.

ITEM	1976 MODEL		
	M/T	A/T	M/T
1. AIR INJECTION AND THERMAL REACTOR SYSTEM			
① Air control valve			
• Configuration	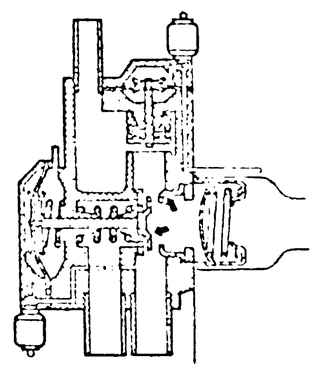		
• Operation (Secondary air cut)	1. Over 248 ± 9°F (floor temperature) 2. Over 4,000 rpm (except deceleration)	1. Same as 1976 M/T 2. Same as 1976 M/T 3. Over 4,800 rpm with choke knob pulled out (except deceleration)	1. Same as 1976 M/T 2. Same as 1976 M/T 3. Over 4,600 rpm with choke pulled out (except dece
• Operation No.1 relief valve (solenoid B) not operating area Secondary air is not relieved to air cleaner and all air is injected into thermal reactor.	1. Idle ~ 1,150 rpm 2. 130 sec. timer : ON (Within 130 sec. from engine starting by using choke knob)	1. Same as 1976 M/T 2. Same as 1976 M/T	1. Same as 1976 M/T 2. Abolished
② Thermal reactor			
• Configuration	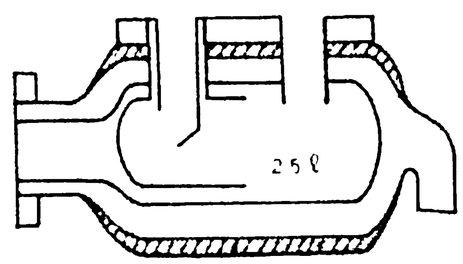		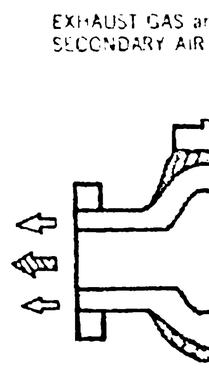
• Capacity	2.5 ℓ	Same as 1976 M/T	2.0 ℓ
③ Heat ring	Not equipped	Not equipped	Newly equipped

EMISSION CONTROL SYSTEM

KEY CHANGE (CONT.)

FEDERAL · CANADA

RX-4 · Cosmo

ITEM	1976 MODEL		
	M/T	A/T	M/T
2. IGNITION CONTROL SYSTEM			
① Methods of ignition control	Equipped	Equipped	Equipped
• Both leading and trailing spark plug ignition	Equipped	Equipped	Abolished
• Leading spark plug ignition only (Trailing plug does not ignite)	Equipped	Equipped	Abolished
• Great retarded ignition of leading plug			
• Vacuum advance cut of leading plug	Equipped	Equipped	Abolished
3. DECELERATION CONTROL SYSTEM			
① Coasting valve			
• Operation (Air supply)	1. During deceleration over 1,150 rpm 2. Just after ignition is switched off	1. Not operating 2. Same as 1976 M/T	1. Same as 1976 M/T 2. Same as 1976 M/T
② Anti-afterburn valve			
• Operation (Air supply)	1. At the beginning of deceleration 2. Just after ignition is switched off	1. Same as 1976 M/T 2. Same as 1976 M/T	1. Same as 1976 M/T 2. Same as 1976 M/T
4. FUEL ENRICHMENT SYSTEM			
① Richer			
• Operation (Fuel supply)	During deceleration over 1,150 rpm	Not equipped	Same as 1976 M/T
② Power valve			
• Operation (Fuel supply)	1. When manifold vacuum is over 2.0 in-Hg (50 mm-Hg) ORDINARY OPERATION – 2. Over 5,500 rpm 3. Within 130 sec. from engine starting by using choke knob	1. Same as 1976 M/T 2. Same as 1976 M/T 3. Same as 1976 M/T	Abolished
5. HOT IDLE COMPENSATION SYSTEM	The system on the 1977 model is same as 1976 model.		
① Bimetal valve			
• Operating temperature	65 ± 4°C	Same as 1976 M/T	Same as 1976 M/T
6. KICK-DOWN CONTROL SYSTEM	Not equipped	The system on the 1976 model is same as 1977 model	Not equipped
7. CRANKCASE EMISSION CONTROL SYSTEM	The system on the 1977 model is same as 1976 model.		
8. EVAPORATIVE EMISSION CONTROL SYSTEM			
① Air vent solenoid valve	Not equipped	Not equipped	Newly equipped
9. HEAT HAZARD PROTECTIVE AND WARNING SYSTEM	The system on the 1977 model is same as 1976 model. **NOTE:** On 1977 model, the trailing spark plug ignition controlled by the heat hazard sensor has been a		

EMISSION CONTROL SYSTEM

KEY CHANGE (CONT.)

FEDERAL · CANADA

RX-4 · Cosmo

ITEM	1976 MODEL		
	M/T	A/T	M/T
10. AUTOMATIC THROTTLE RELEASE SYSTEM			
(1) Water temperature switch			
• Throttle choke knob release timing	When choke knob is pulled out (but not fully) above 153°F (water temperature)	Same as 1976 M/T	When choke knob is pu above 140°F (Water tem
(2) NO.2 timer (30 seconds) - in control unit -			
• Throttle (choke knob) release timing	After 30 seconds from engine starting with choke knob fully pulled out	Same as 1976 M/T	Abolished
11. INTAKE AIR TEMPERATURE CONTROL SYSTEM	The system on the 1977 model is same as 1976 model		
12. THROTTLE OPENER SYSTEM (FOR AIR CONDITIONER)	The system on the 1977 model is same as 1976 model		
13. EGR CONTROL AND EGR MAINTENANCE WARNING SYSTEMS	Not equipped	Not equipped	Not equipped

EMISSION CONTROL SYSTEM

KEY CHANGE (CONT.)

FEDERAL · CANAD

RX-4 · Cosmo





AIR INJECTION AND THERMAL REACTOR SYSTEM

DESCRIPTION

FEDERAL · CANADA

RX-4 · Cosmo

DESCRIPTION

The air injection and thermal reactor system serves to blow compressed air (secondary air) into the hot gases discharged from the engine exhaust ports for the purpose of reburning the unburnt HC and CO.

[WHEN ENGINE IS OPERATING]

The fresh air from the air cleaner compressed by the air pump is injected into the engine exhaust ports adjacent to the thermal reactor.

[WHEN EXCESSIVE AIR PRESSURE IS CREATED]

The some of fresh air from the air pump is released to the thermal reactor cooling jacket to prevent the damage of air pump and loss of engine power. —— Operation of No. 1 relief valve ——

[WHEN ENGINE SPEED IS 1.150 ~ 4.000 RPM (without choke knob pulled out, except deceleration) OR 1.150 ~ 4.600 RPM (with the choke knob pulled out)]

The some of fresh air supplying to the engine exhaust ports is released to the air cleaner to obtain the balanced fresh air – exhaust gas mixture for reburning. —— Operation of No. 2 relief valve ——

[WHEN ENGINE SPEED IS OVER 4.000 RPM (except deceleration and cold starting), OVER 4.600 RPM (with choke knob pulled out, except deceleration) AND FLOOR TEMPERATURE IS OVER 248°F]

The fresh air from the air pump is not injected into the engine exhaust ports and is supplied into the thermal reactor cooling air jacket to prevent the thermal reactor from overheating. —— Operation of air cut valve ——

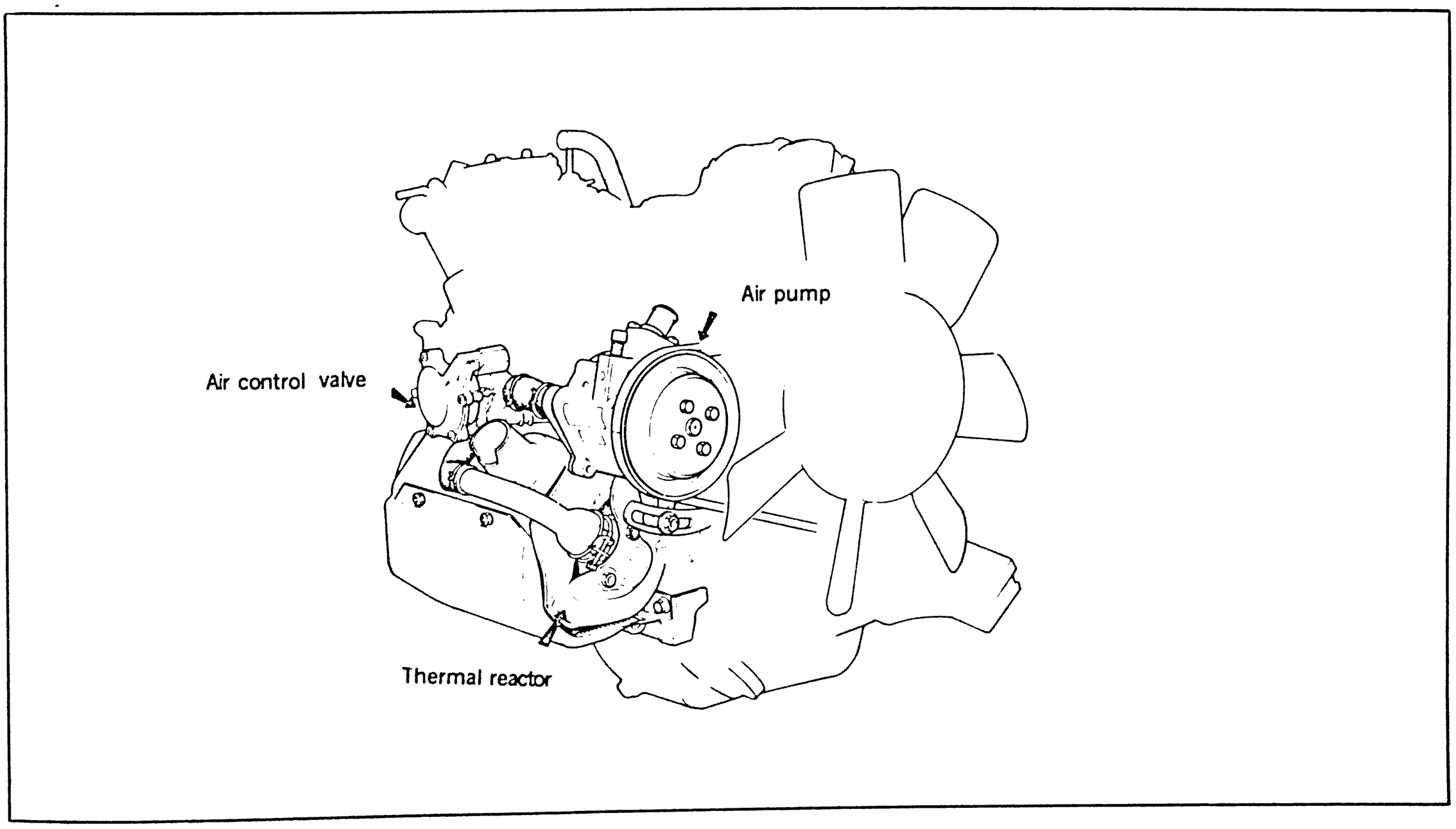

Fig. 4-2 Air injection and thermal reactor system

AIR INJECTION AND THERMAL REACTOR SYSTEM

DESCRIPTION (CONT.)

FEDERAL · CANADA

RX-4 · Cosmo

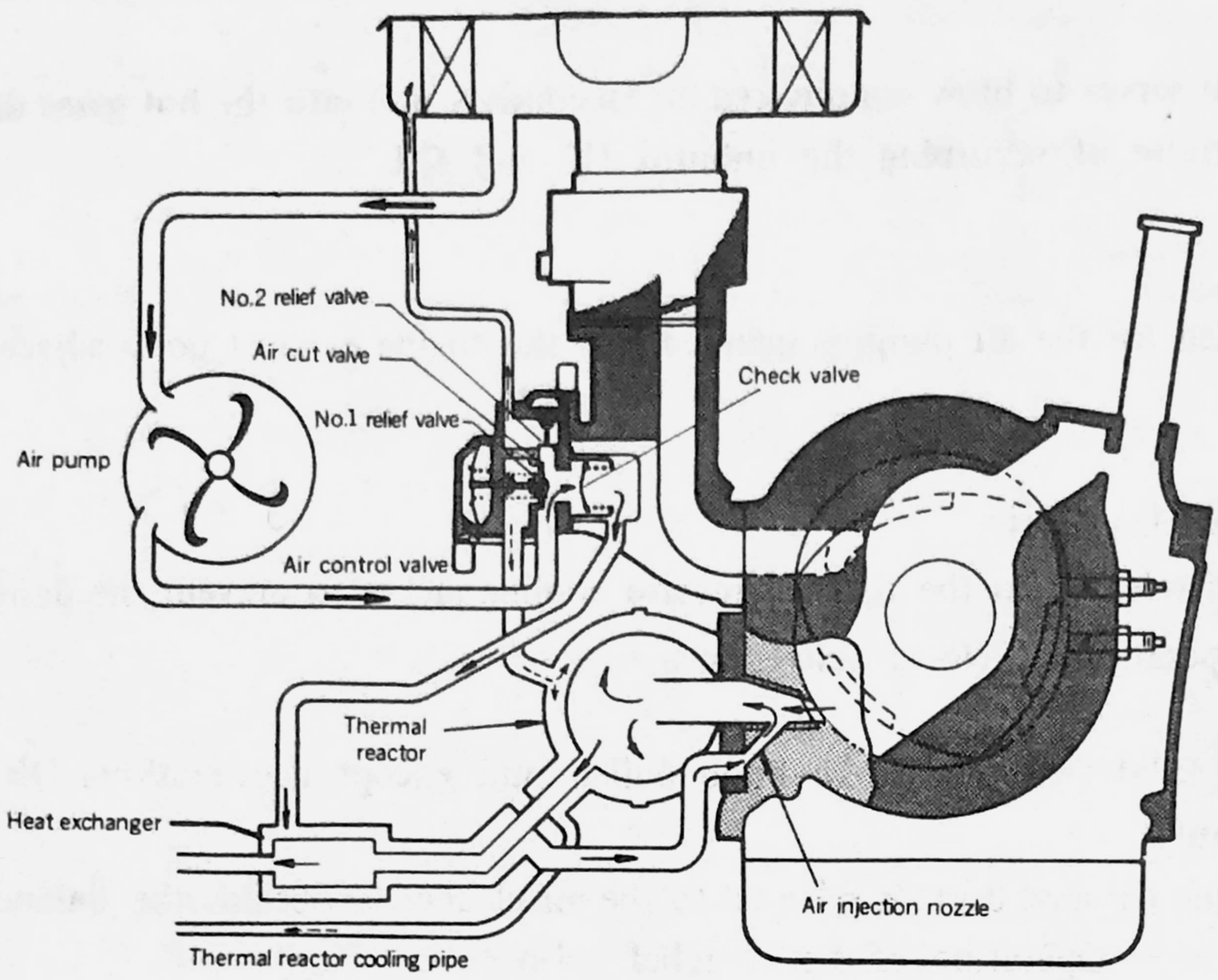

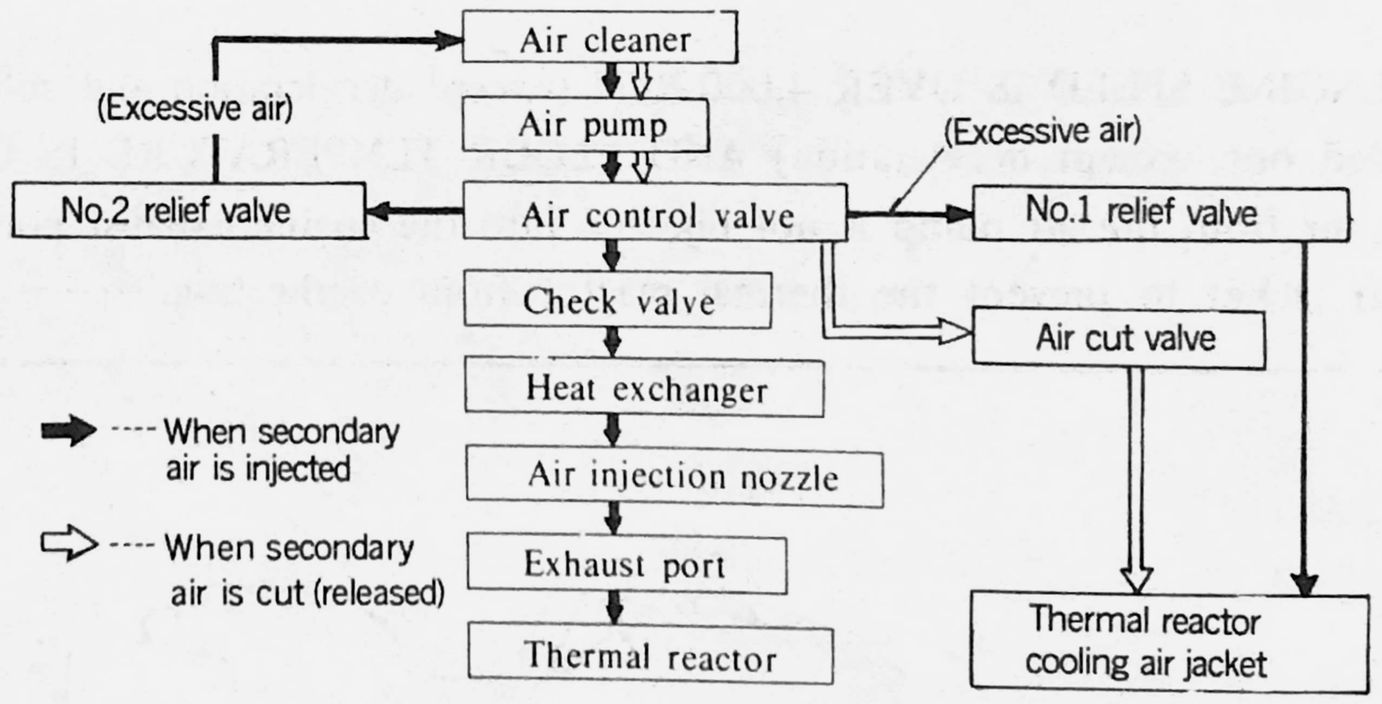

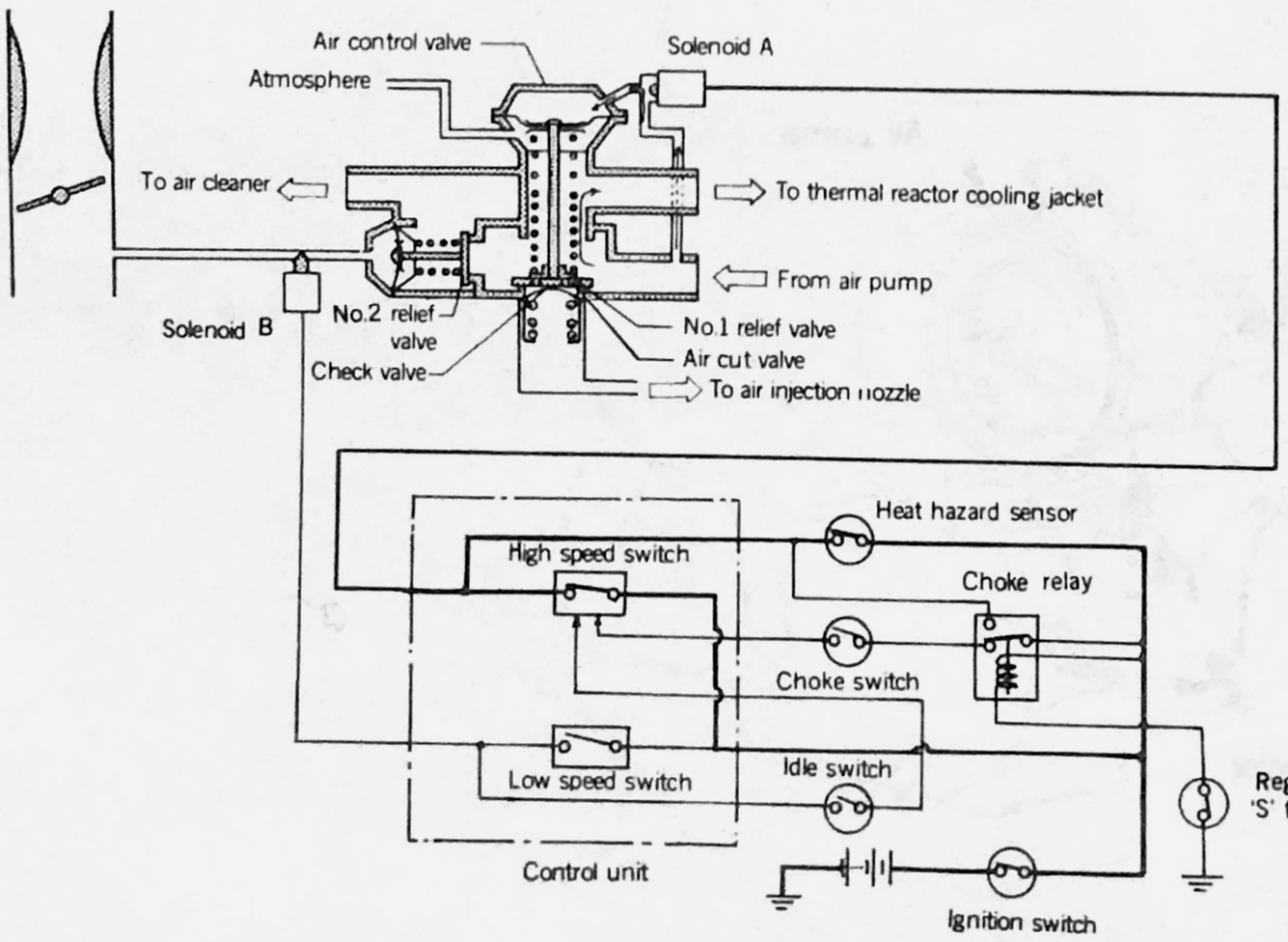

Fig. 4-3 Air injection and thermal reactor system

DECELERATION CONTROL SYSTEM

DESCRIPTION

FEDERAL · CANADA
CALIFORNIA

RX-4 M/T · Cosmo M/T

DESCRIPTION

The deceleration control system is designed to maintain a balanced air-fuel mixture during deceleration.

[AT THE BEGINNING OF SUDDEN DECELERATION]
The anti-afterburn valve supplies the fresh air from the air cleaner into the intake manifold to prevent the afterburn.

[DURING DECELERATION OVER 1.150 RPM]
The coasting valve starts to operate at the same time when the anti-afterburn valve has started its operation and allows the fresh air from the air cleaner into the intake manifold to prevent the afterburn.

[JUST AFTER IGNITION SWITCH IS TURNED OFF]
The anti-afterburn valve and coasting valve supply the fresh air from the air cleaner into the intake manifold to prevent the afterburn.

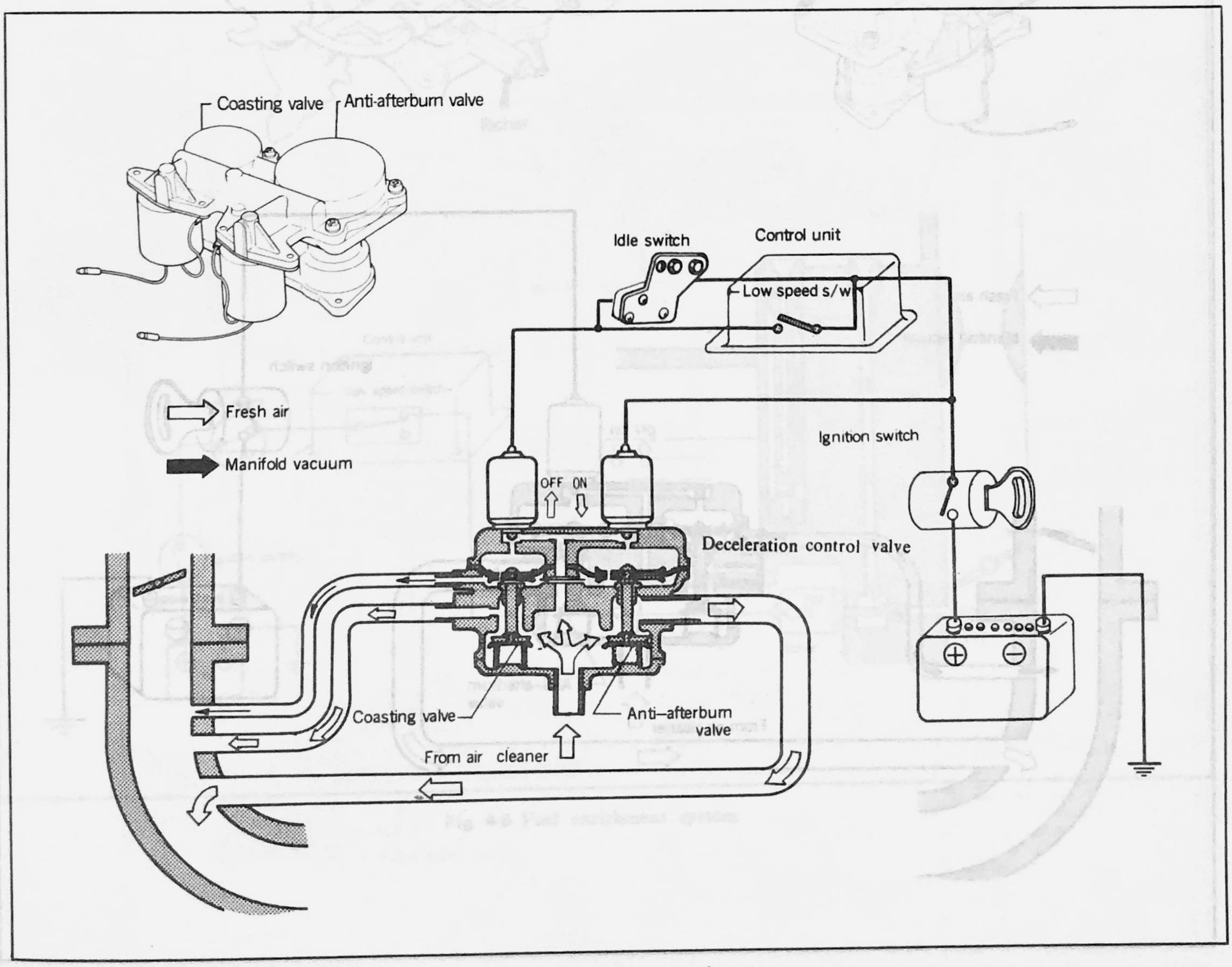

Fig. 4-4 Deceleration control system

DECELERATION CONTROL SYSTEM

FEDERAL

DESCRIPTION

RX-4 A/T · Cosmo A/T

DESCRIPTION

The deceleration control system is designed to maintain a balanced air-fuel mixture during deceleration.

[AT THE BEGINNING OF SUDDEN DECELERATION]

The anti-afterburn valve supplies the fresh air from the air cleaner into the intake manifold to prevent the afterburn.

[JUST AFTER IGNITION SWITCH IS TURNED OFF]

The anti-afterburn valve supplies the fresh air into the intake manifold to prevent the afterburn.

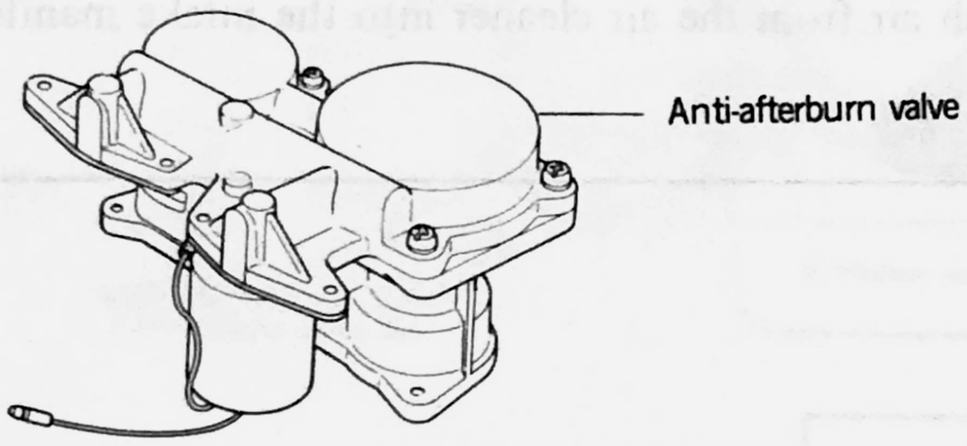

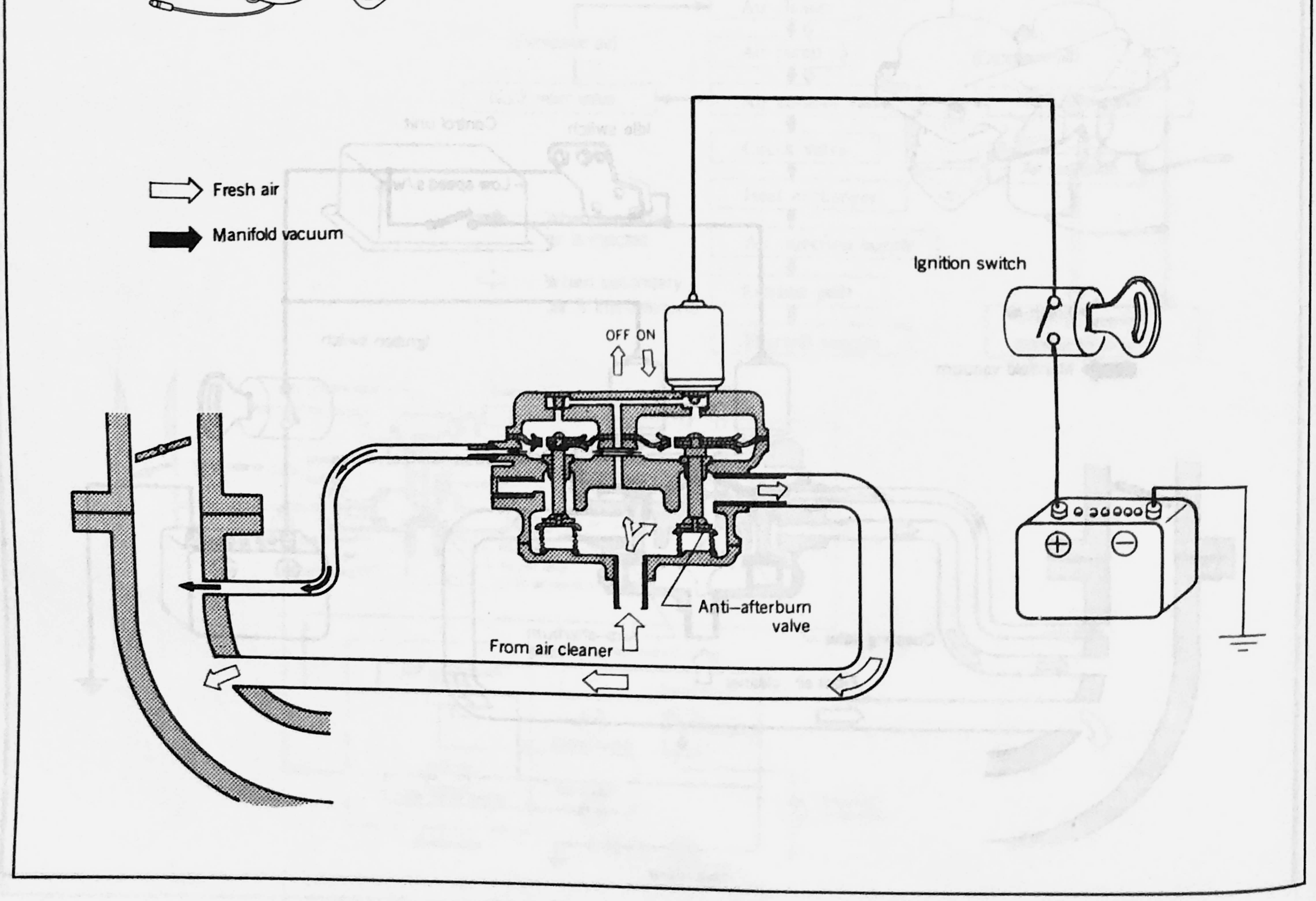

Fig. 4-5 Deceleration control system

FUEL ENRICHMENT SYSTEM

FEDERAL · CANADA

DESCRIPTION

RX-4 M/T · Cosmo M/T

DESCRIPTION

The fuel enrichment system is designed to maintain a balanced air-fuel mixture for improving the driveability.

[DURING DECELERATION OVER 1,150 RPM]

The richer supplies an additional fuel into the intake manifold.

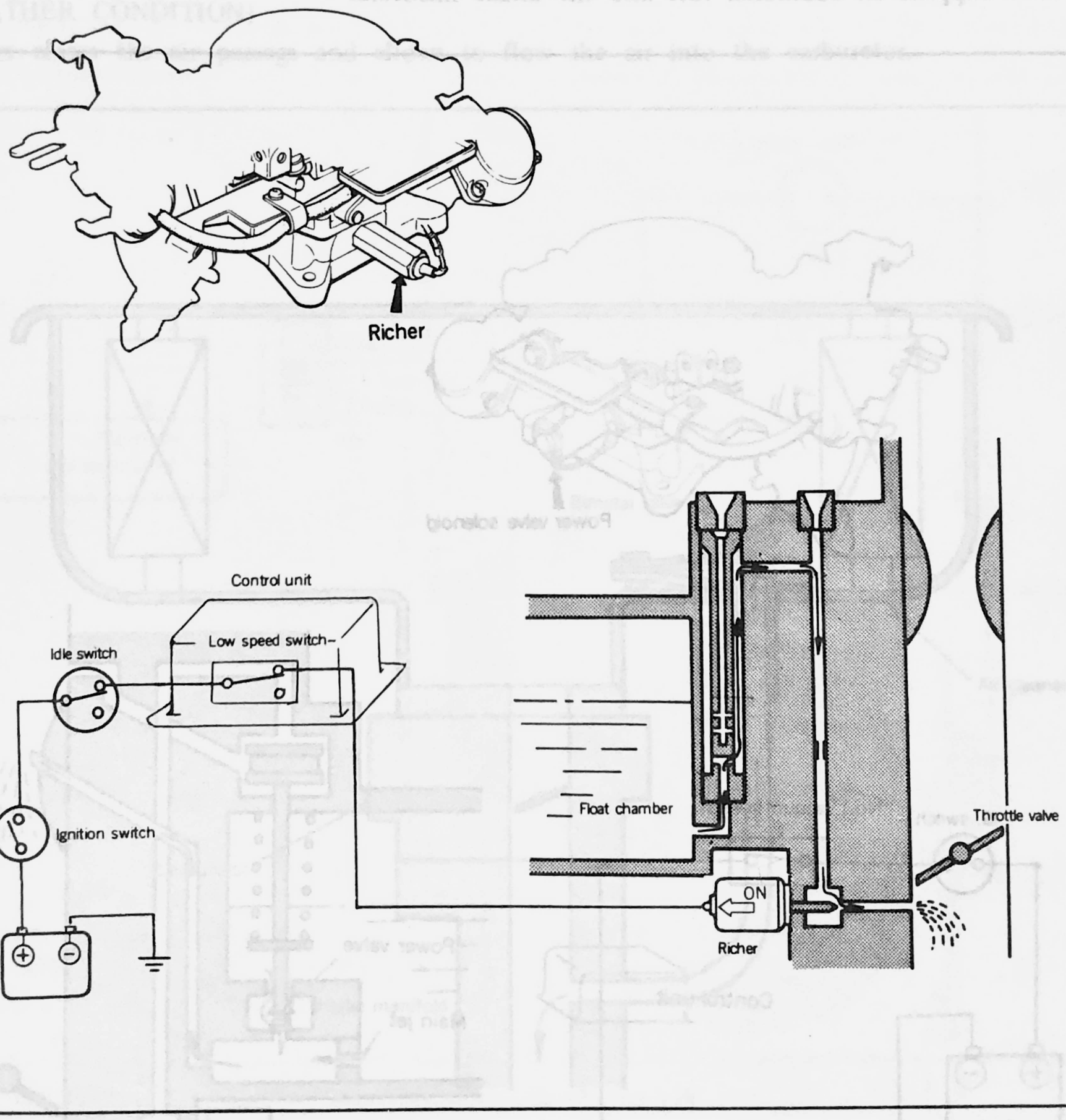

Fig. 4-6 Fuel enrichment system

FUEL ENRICHMENT SYSTEM

FEDERAL

DESCRIPTION

RX-4 A/T · Cosmo A/T

DESCRIPTION

The fuel enrichment system is designed to maintain a balanced air-fuel mixture for reducing the NOx and improving the driveability.

[WHEN MANIFOLD VACUUM IS BELOW 2.0 IN-HG (Ordinally operation)]

The power valve supplies an additional fuel into the intake manifold.

[DURING ACCELERATION]

The power valve supplies an additional fuel into the intake manifold.

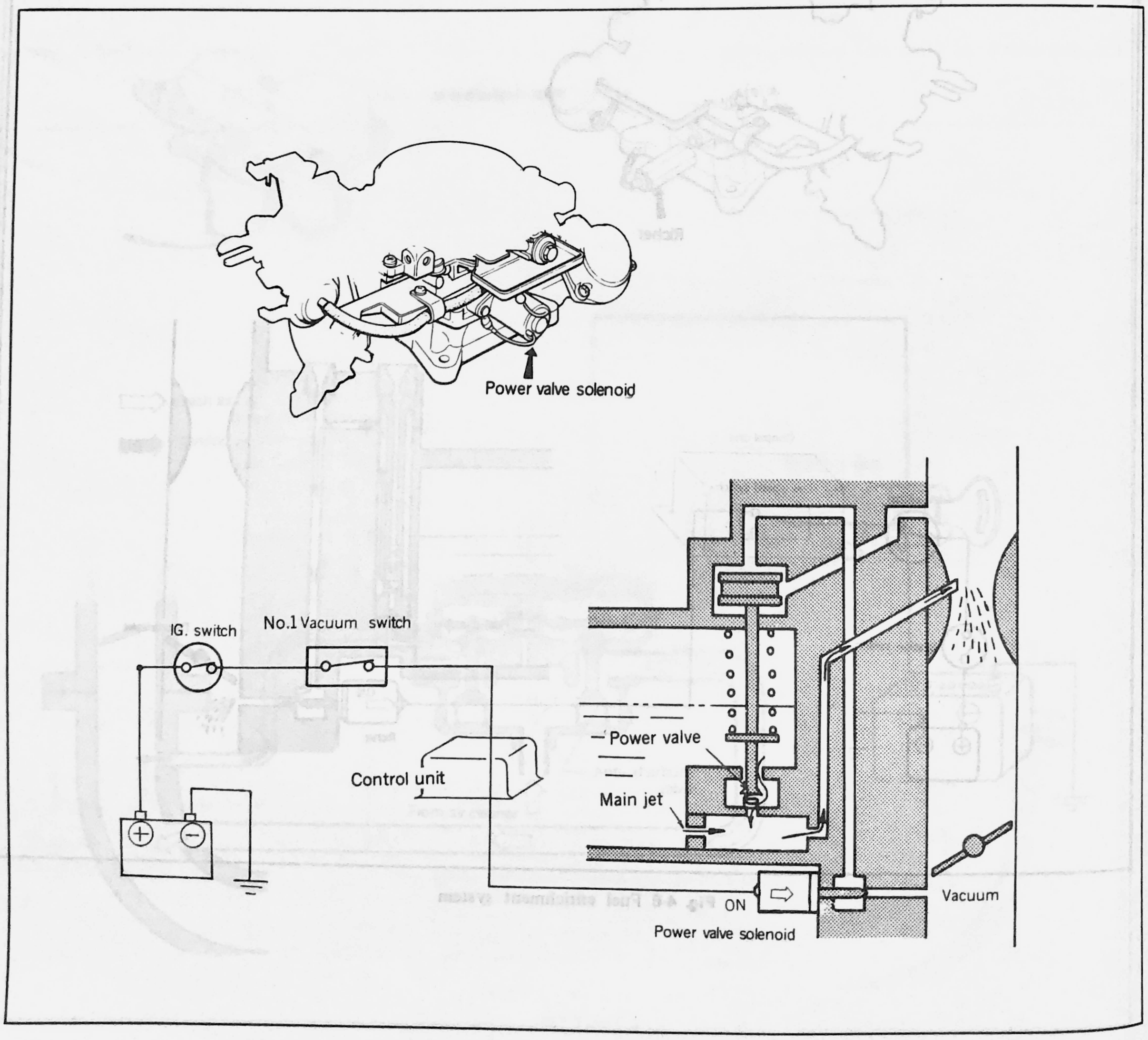

Fig. 4-7 Fuel enrichment system

HOT IDLE COMPENSATION SYSTEM

DESCRIPTION

FEDERAL · CANADA
CALIFORNIA

RX-4 · Cosmo

DESCRIPTION

In extremely hot condition, the rich mixture will drawn in the intake manifold. The hot idle compensation system is designed to maintain a balanced air-fuel mixture during engine idling.

[IN EXTREMELY HOT CONDITION]

The bimetal valve opens the air passage. As a result, the additional air from the air cleaner is drawn in the intake manifold and the rich mixture is corrected to optimum air-fuel mixture to burn completely.

[IN COLD WEATHER CONDITION]

The bimetal valve closes the air passage and allows to flow the air into the carburetor.

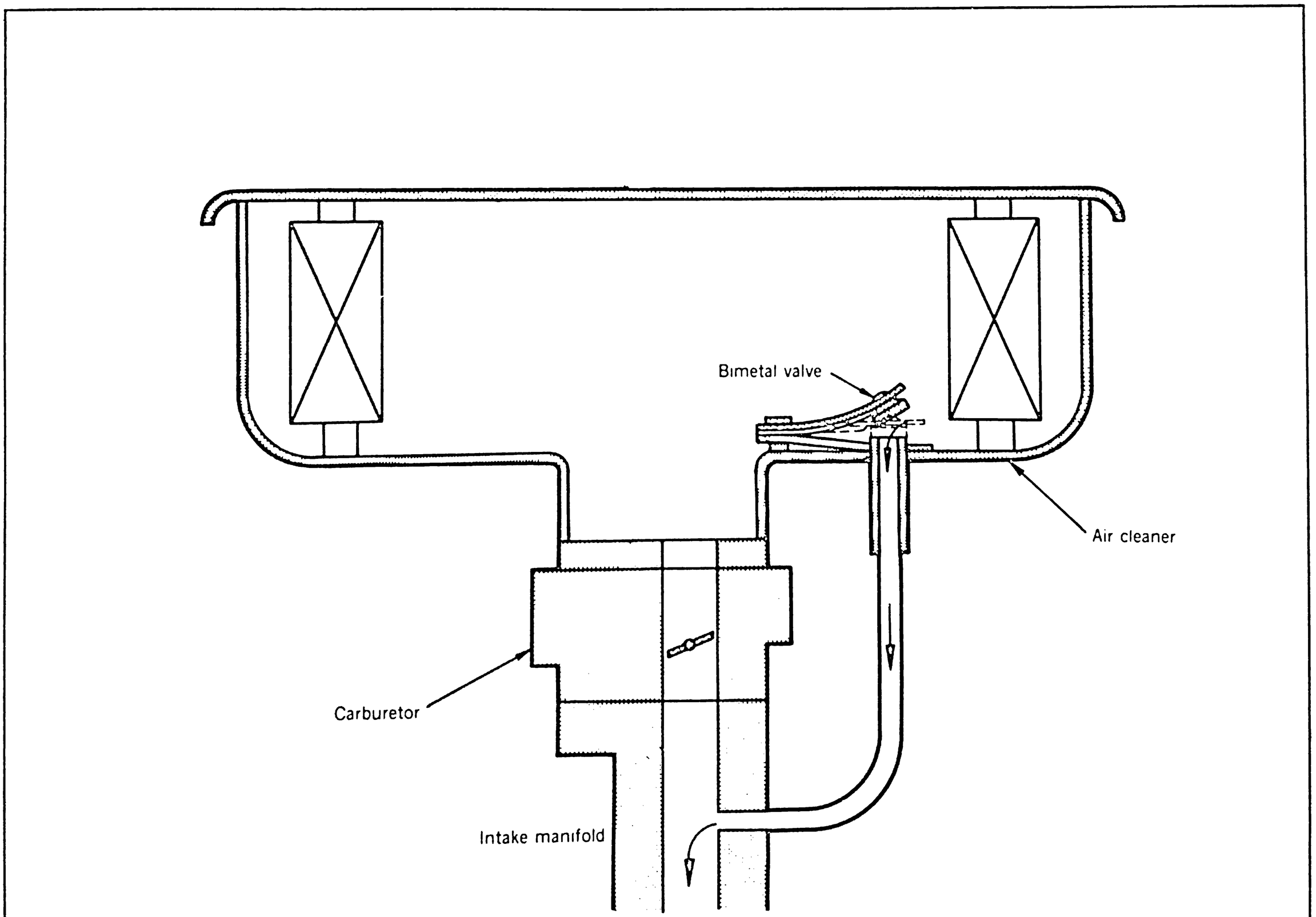

Fig. 4-8 Hot idle compensation system

KICK - DOWN CONTROL SYSTEM

DESCRIPTION

FEDERAL · CANADA
CALIFORNIA

RX-4 A/T · Cosmo A/T

DESCRIPTION

The kick-down control system achieves the kick-down operation as well as the normal kick-down, when the engine is cold, to warm up the thermal reactor quickly.

[WHEN CHOKE KNOB IS PULLED OUT]

The automatic transmission is kicked down to increase the engine speed.

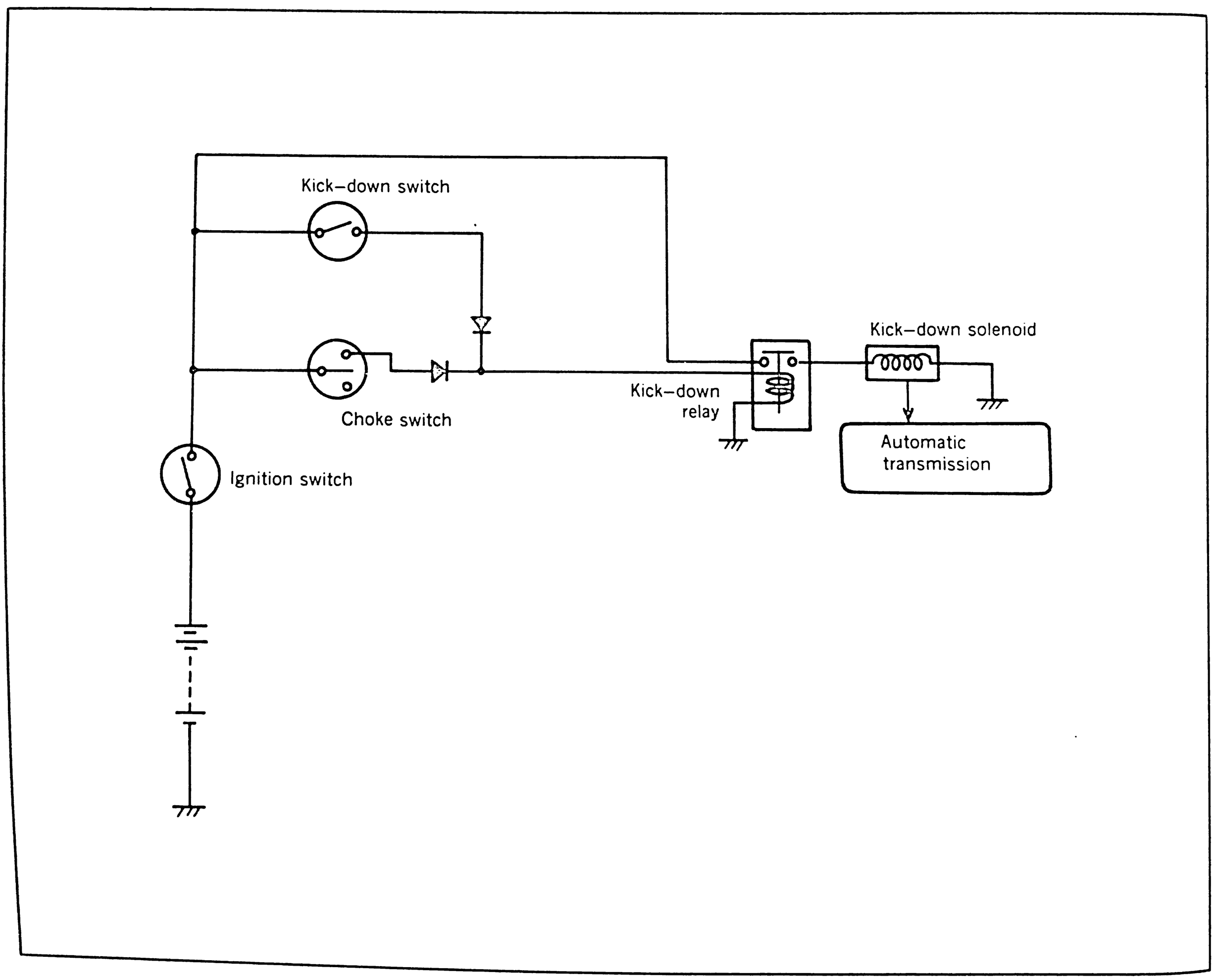

Fig. 4-9 Kick-down control system

CRANKCASE EMISSION CONTROL SYSTEM

DESCRIPTION

FEDERAL · CANADA
CALIFORNIA

RX-4 · Cosmo

DESCRIPTION

The crankcase emission control system is a closed system adopted specifically for maintaining ventilation in the engine air space (crankcase) and positively preventing vapors from being emitted by recirculating to the engine.
The air space is filled with gases or vapors that blow by the rotors during engine operation. These vapors are fed back by the system to the combustion chambers so that they will be burned.
The ventilation valve controls the amount of blow-by gas flow according to the engine load.

[WHEN ENGINE OPERATING]
The blow-by gases pass through the outlet hose and ventilation valve, and are taken into the intake manifold for burning.

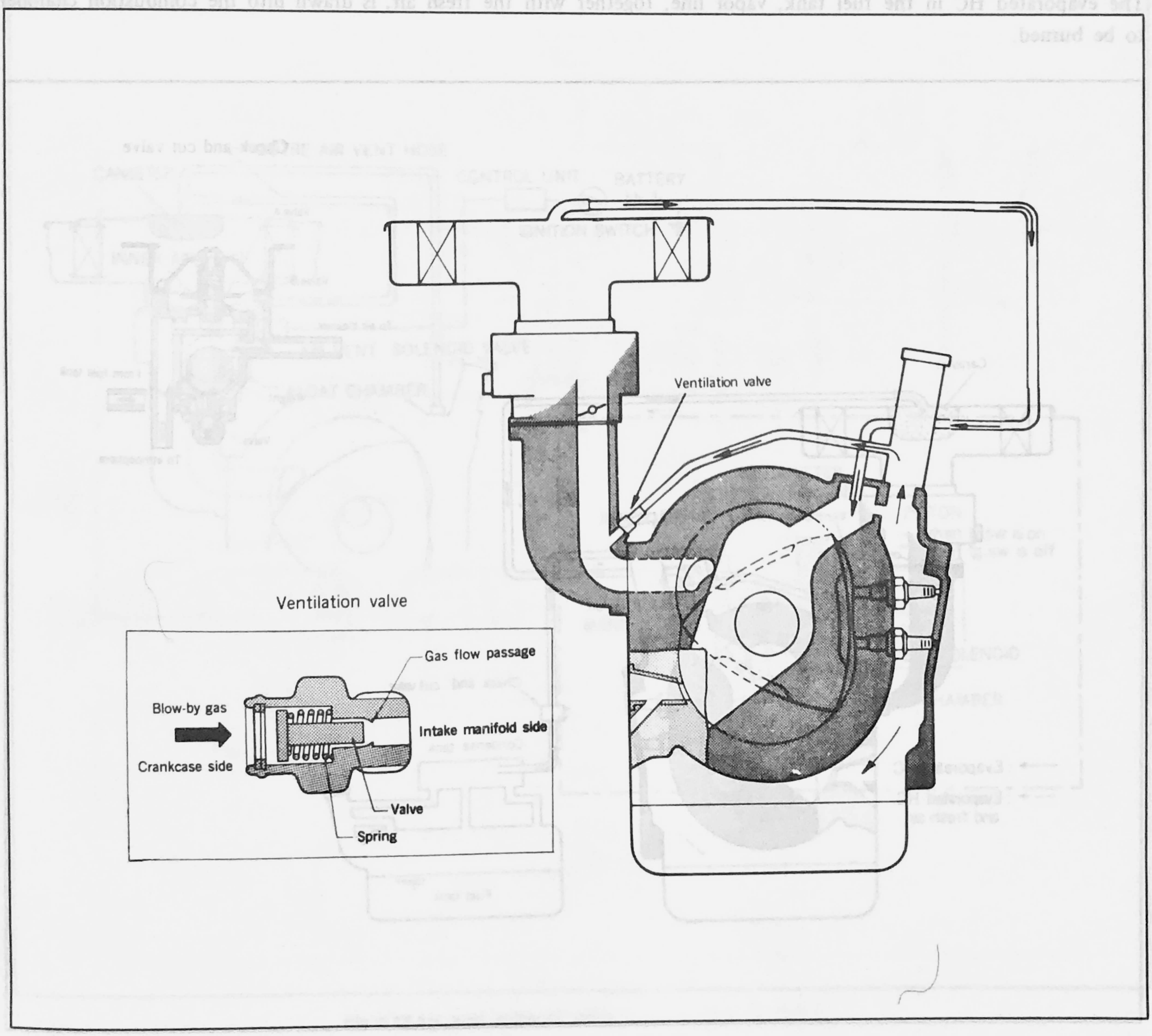

Fig. 4-10 Crankcase emission control system

EVAPORATIVE EMISSION CONTROL SYSTEM

DESCRIPTION

FEDERAL · CANADA
CALIFORNIA

RX-4 · Cosmo

DESCRIPTION

The evaporative emission control system is to lead HC evaporated from the fuel system to the combustion chambers where HC is burned and discharged into the atmosphere in the form of non-toxic gas.

[ENGINE STOPPED]

When the fuel tank internal pressure increases above the specified value, the evaporated HC will be absorbed by the activated carbon in the canister.

[WHEN ENGINE OPERATING]

The evaporated HC in the fuel tank, vapor line, together with the fresh air, is drawn into the combustion chamber to be burned.

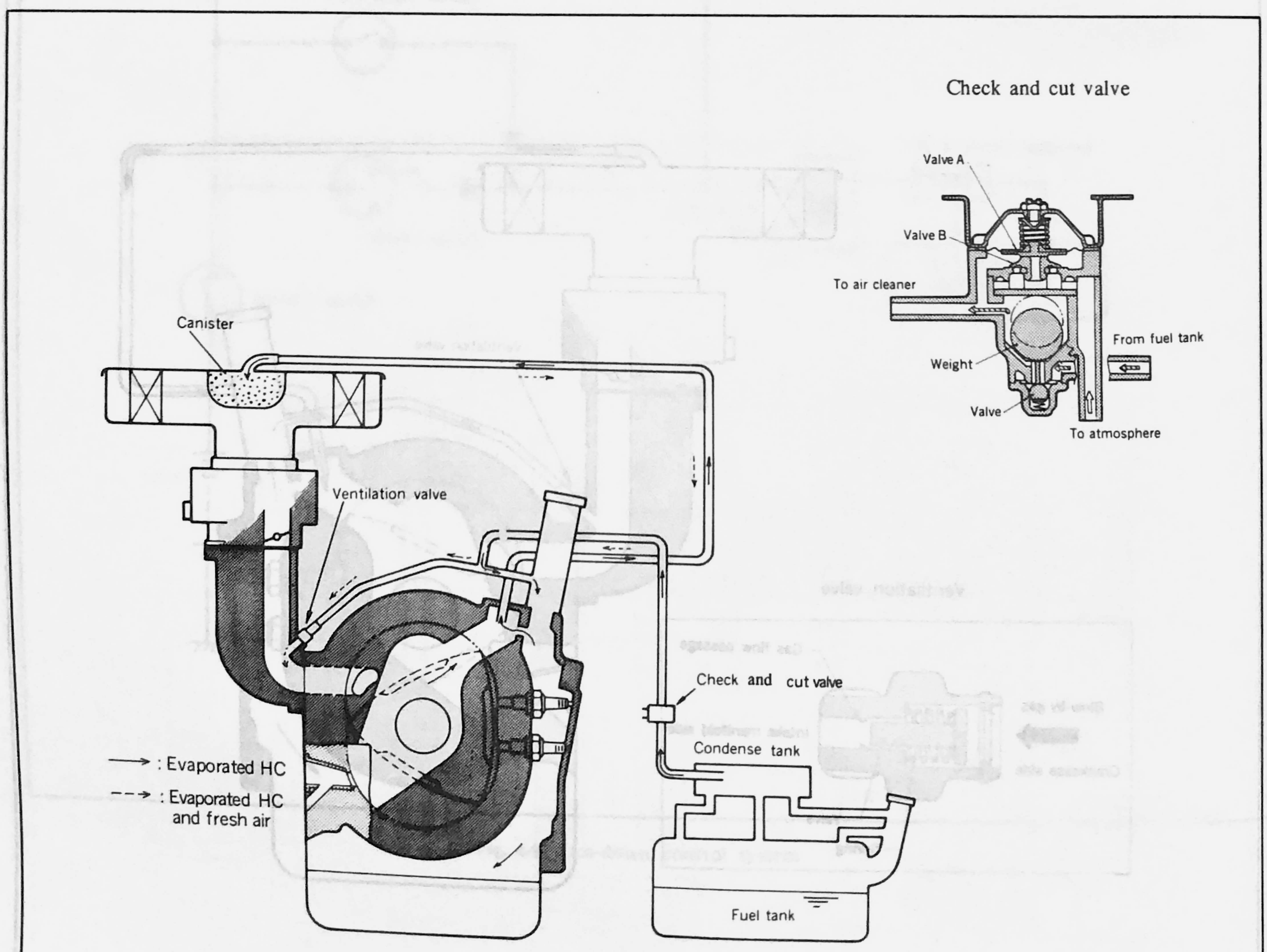

Fig. 4-11 Evaporative emission control system

EVAPORATIVE EMISSION CONTROL SYSTEM —AIR VENT SOLENOID VALVE—

DESCRIPTION

FEDERAL · CANADA
CALIFORNIA

RX-4 · Cosmo

DESCRIPTION

While the vehicle is parked short period of time subsequent to the long period of driving, there is a tendency that the fuel in the float chamber evaporates and enters into the intake manifold through the air vent. Thus, the air-fuel mixture will become rich. To prevent this condition, the air vent solenoid valve will operate.

[WHEN IGNITION SWITCH IS TURNED OFF]

The fuel vapor evaporated from the float chamber is led into the charcoal canister to trap it.

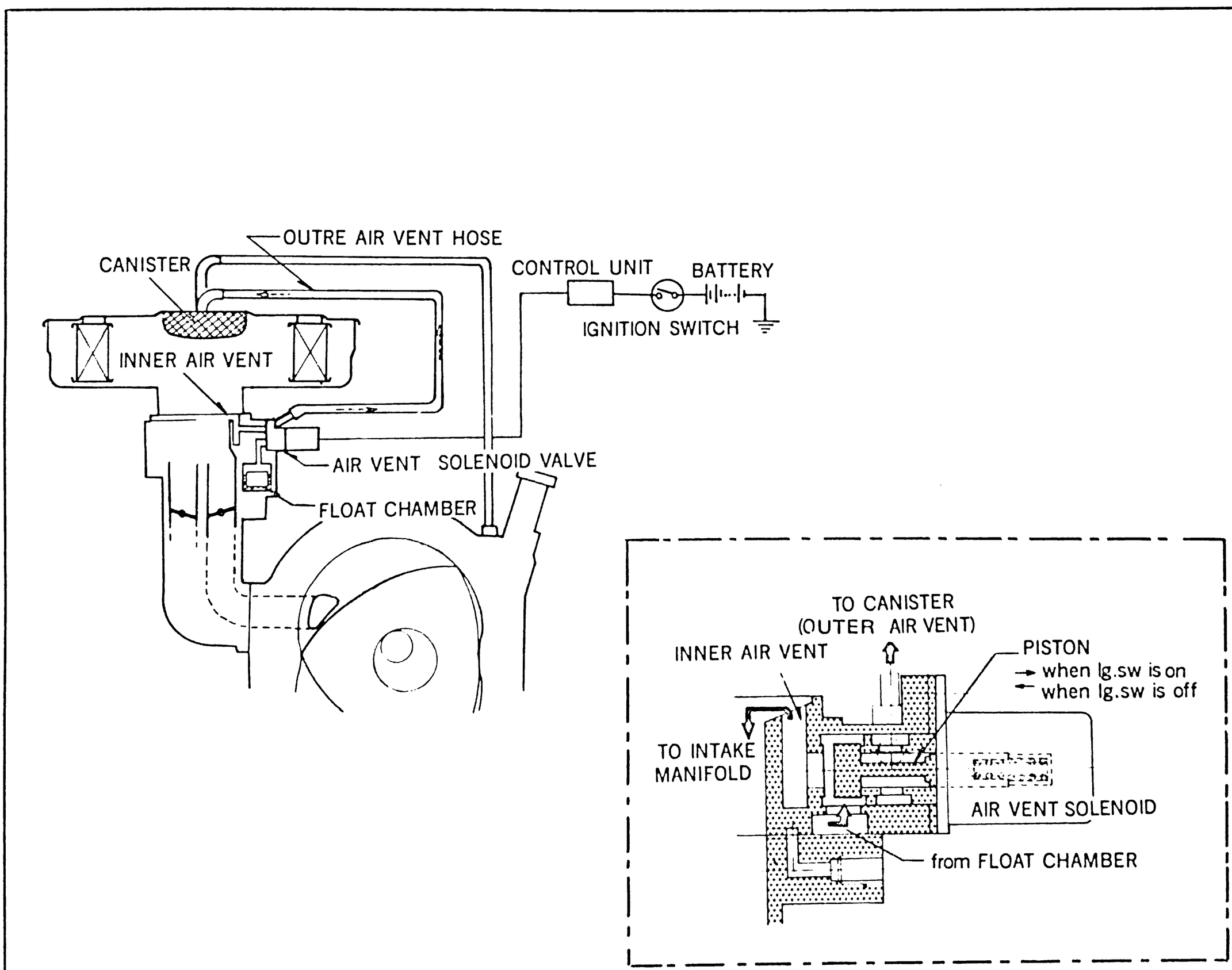

Fig. 4-12 Air vent solenoid valve

HEAT HAZARD PROTECTIVE AND WARNING SYSTEM

DESCRIPTION

FEDERAL · CANADA
CALIFORNIA

RX-4 · Cosmo

DESCRIPTION

The purpose of this system is to prevent the potential heat hazard to the vehicle due to excessive heat radiation from the exhaust system.

[WHEN IGNITION SWITCH IS ON]

The warning lamp will illuminate when the ignition is switched on. (After starting the engine, the lamp lights out). If the warning lamp fails turn on when the ignition is switched on, the warning lamp electric circuit is faulty.

[WHEN FLOOR TEMPERATURE IS HIGHER THAN 248°F]

- The warning lamp on the instrument panel will illuminate.
- The fresh air (secondary air) injecting into the engine exhaust ports (by the air pump) is cut to prevent the floor temperature from rising.

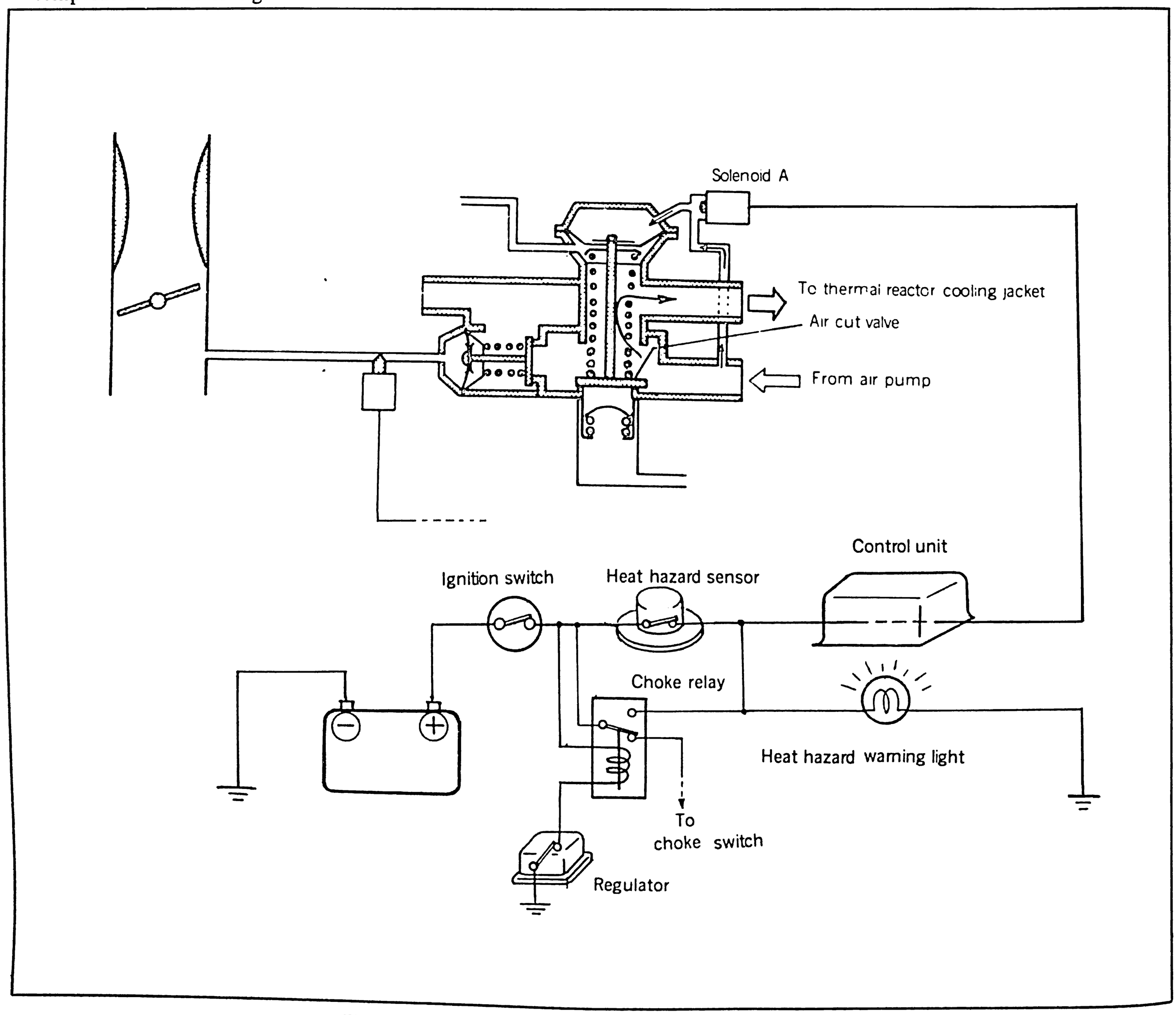

Fig. 4-13 Heat hazard protective and warning system

AUTOMATIC THROTTLE RELEASE SYSTEM

DESCRIPTION

FEDERAL · CANADA

RX-4 · Cosmo

DESCRIPTION

If the vehicle is driven with the choke knob pulled out for a long time, the rich mixture will drawn in the intake manifold. This over-rich mixture will not burn completely in the combustion chamber and is discharged to the thermal reactor. Thus, the thermal reactor temperature will become excessive high.
For this reason, the choke knob is forcibly returned to prevent the mixture from becoming too rich.

[WHEN WATER TEMPERATURE IS ABOVE 140°F]
The choke knob is forcibly returned.

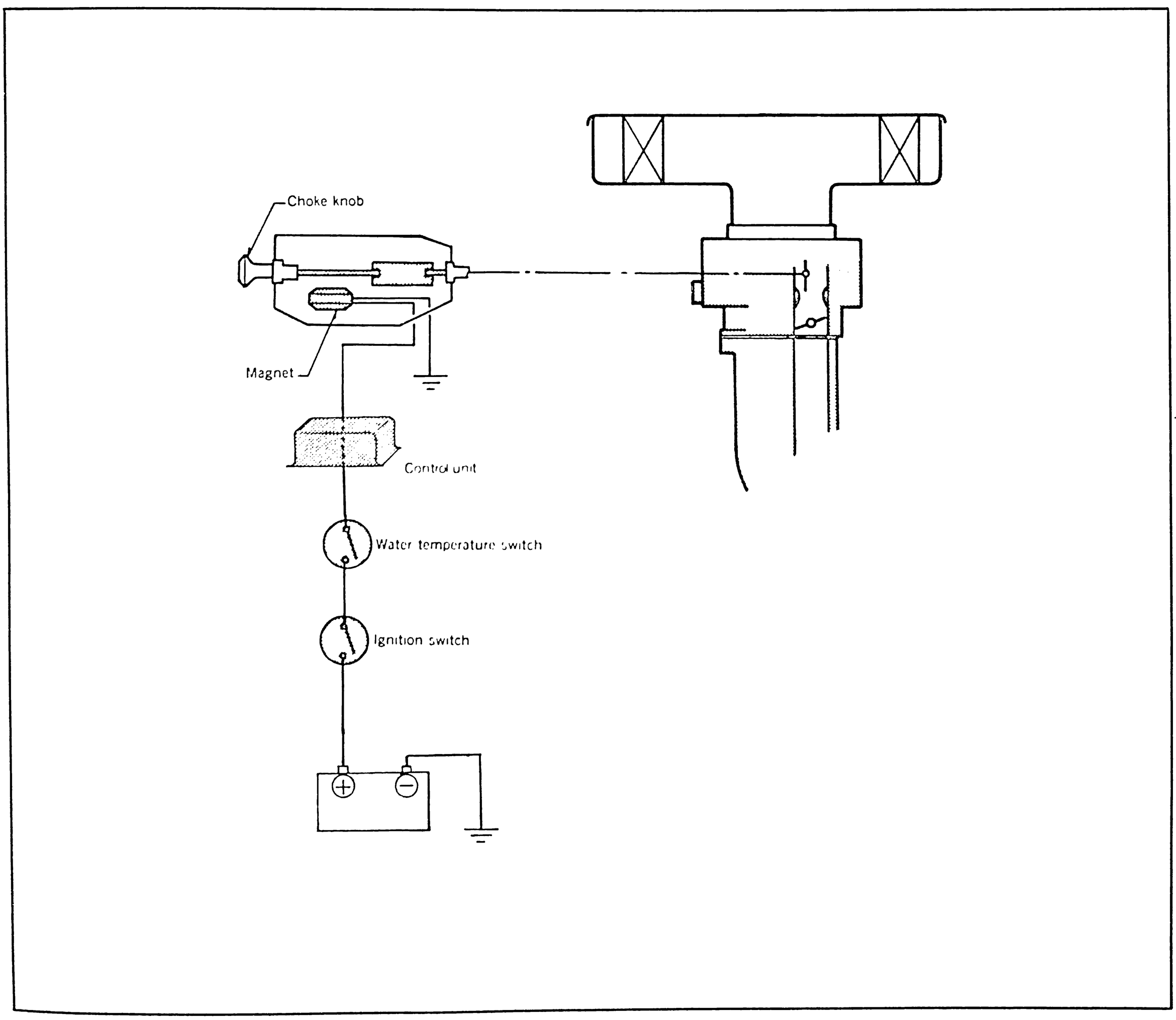

Fig. 4-14 Automatic throttle release system

INTAKE AIR TEMPERATURE CONTROL SYSTEM

DESCRIPTION

FEDERAL · CANADA
CALIFORNIA

RX-4 · Cosmo

DESCRIPTION

This system keeps the temperature of the air drawn into the carburetor as constantly as possible regardless of the ambient temperature. It provides hot air supply to the carburetor in cold weather to improve driveability and to prevent the carburetor from freezing under extremely cold weather.

[WHEN COLD]
The hot air around the thermal reactor is led into the carburetor.

[WHEN HOT]
The cold air (fresh air) is led into the carburetor.

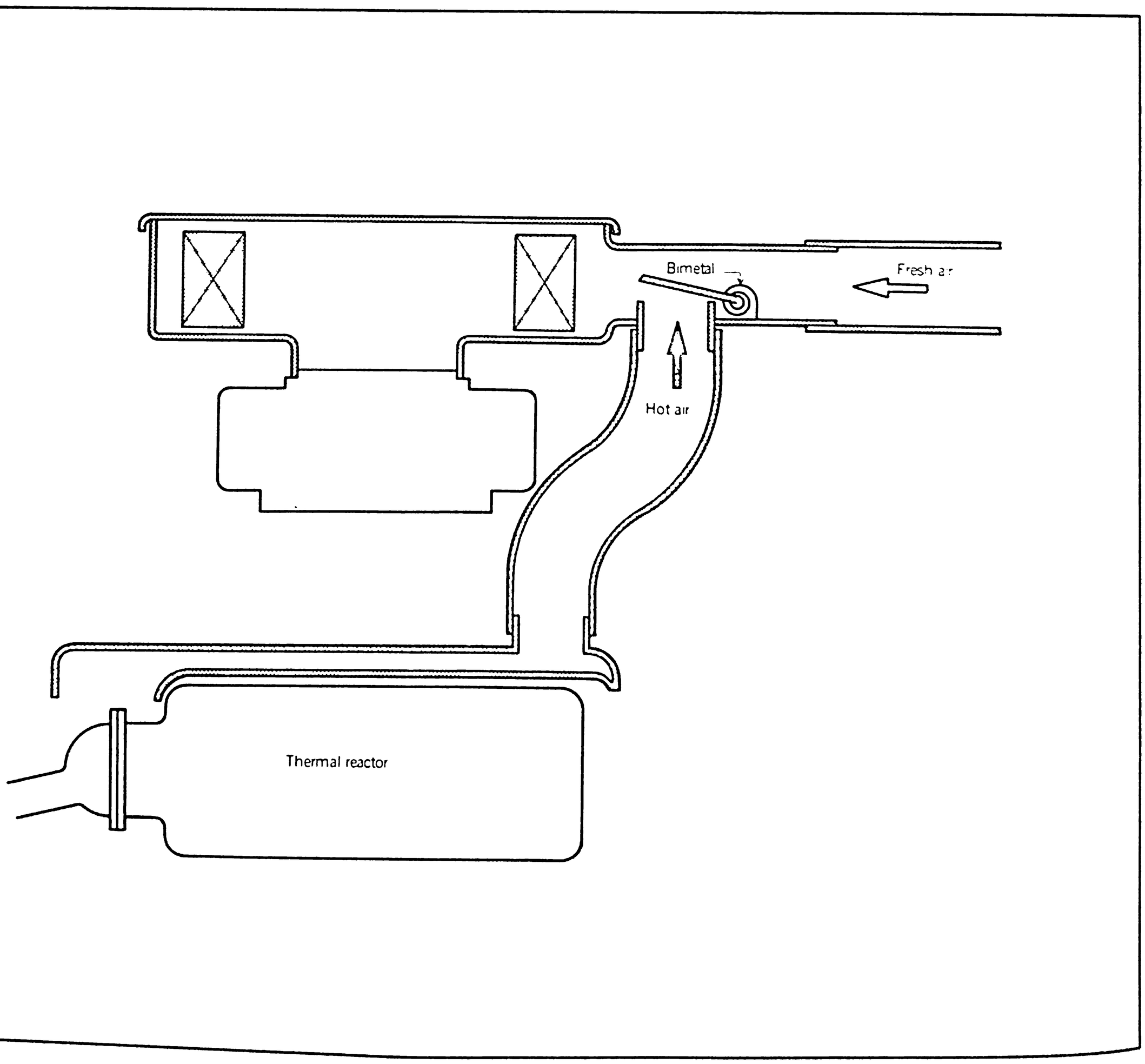

Fig. 4-15 Intake air temperature control system

THROTTLE OPENER SYSTEM (For air conditioner)

DESCRIPTION

FEDERAL · CANADA
CALIFORNIA

RX-4 · Cosmo

DESCRIPTION

The throttle opener system serves to improve the cooling efficiency at low speed and idling, and to obtain the smooth idling.

[WHEN ENGINE SPEED IS BELOW 1.150 RPM AND AIR CONDITIONER SWITCH IS ON]

The primary throttle valve is opened slightly more than at idle position to lead the additional air-fuel mixture into the intake manifold.

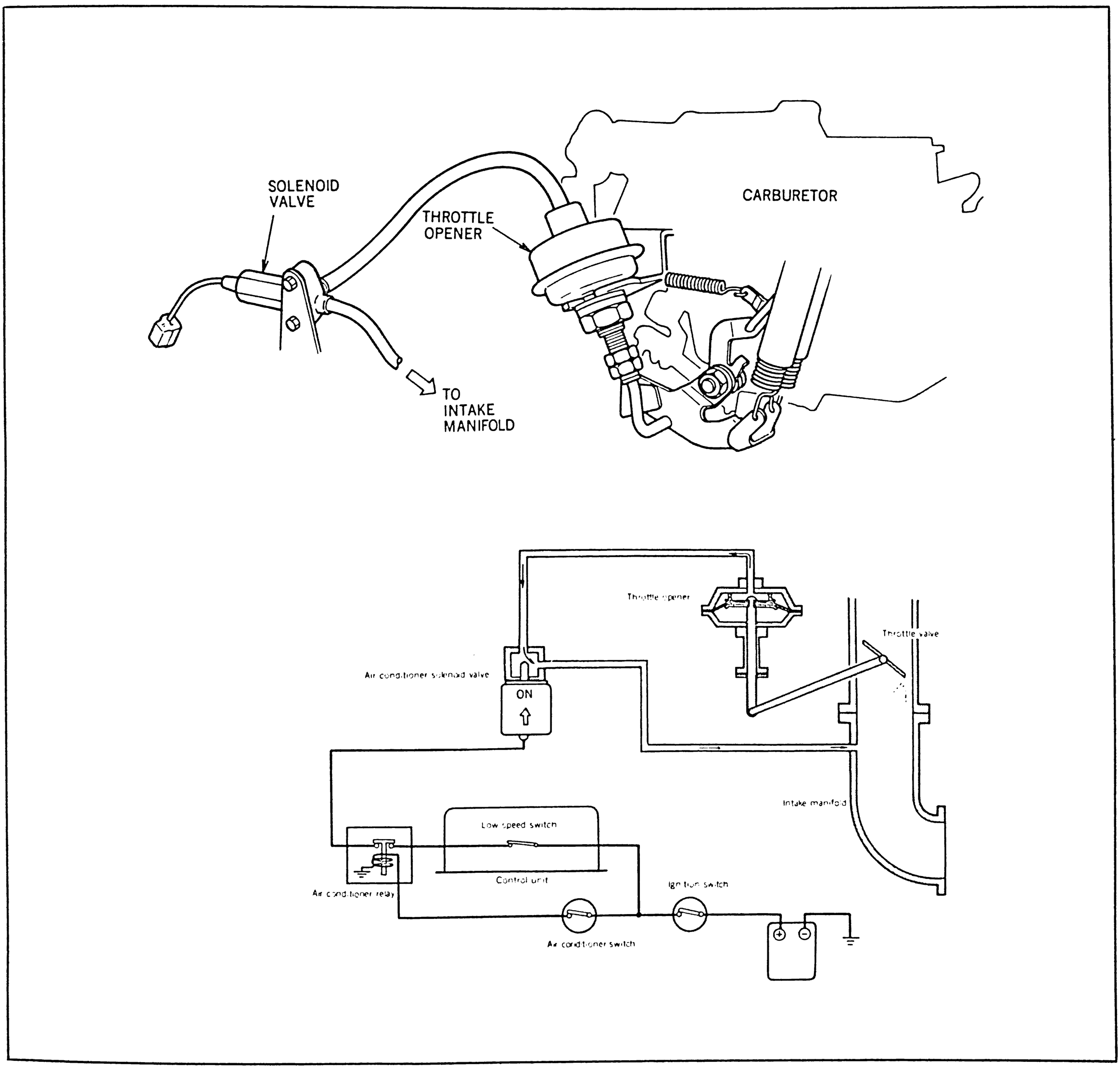

Fig. 4-16 Throttle opener system

EGR CONTROL SYSTEM

FEDERAL

DESCRIPTION

RX-4 A/T · Cosmo A/T

DESCRIPTION

The EGR control system is used to dilute the air-fuel mixture in the intake manifold with a small percentage of exhaust gas. The exhaust gas does not burn and absorbs some of the combustion heat. This has the effect of lowering the temperature in the chamber and reduces emission of NOx (oxides of nitrogen)

[DURING ACCELERATION AT ENGINE HOT CONDITION (when water temperature is over 140°F)]
A part of exhaust gases from the exhaust manifold is led into the intake manifold through the EGR valve.

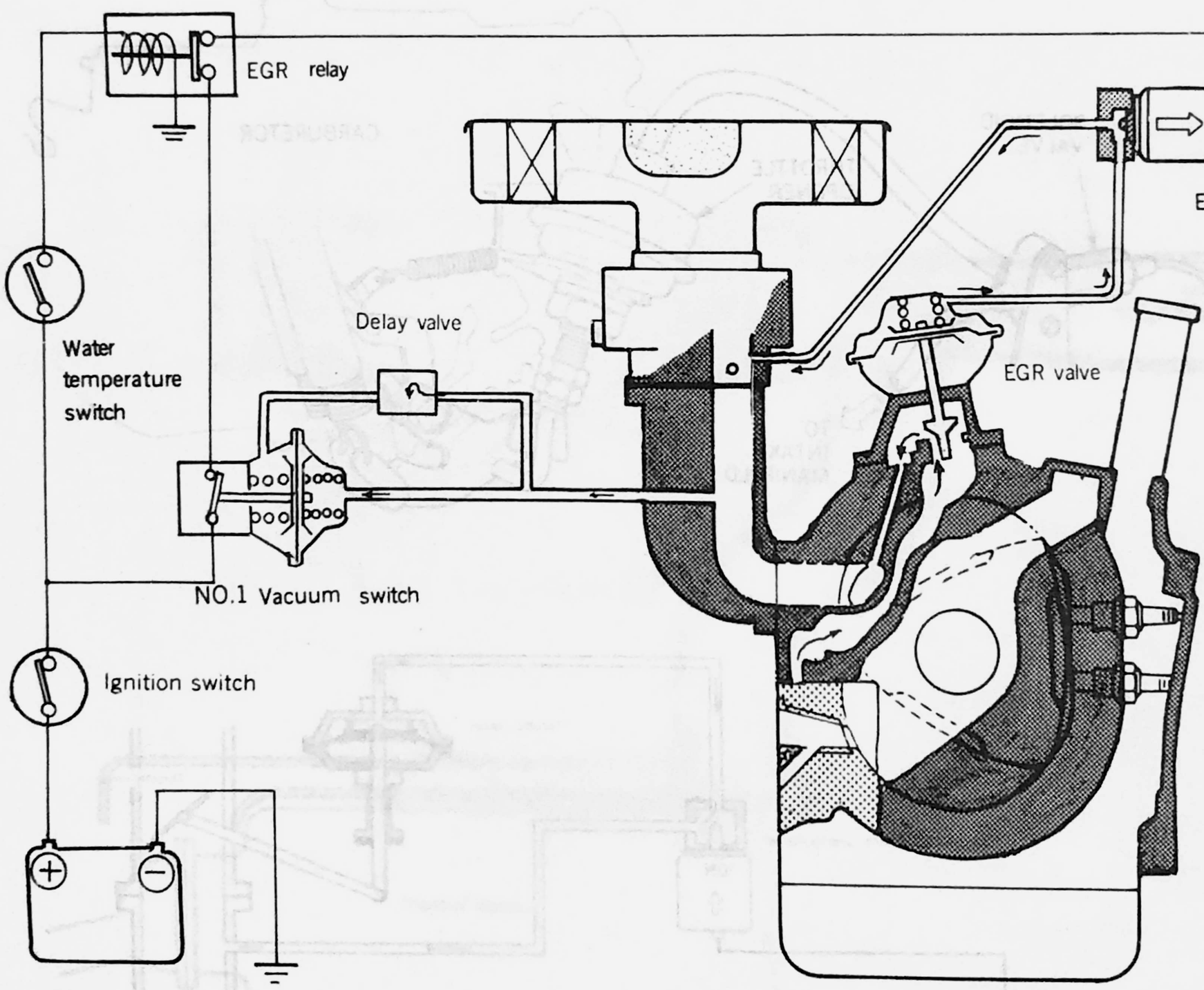

Fig. 4-17 EGR control system

EGR MAINTENANCE WARNING SYSTEM

DESCRIPTION

FEDERAL
CALIFORNIA

RX-4 A/T · Cosmo A/T

DESCRIPTION

This is a warning device to indicate that the EGR system is in maintenance period.

[WHEN ENGINE IS CRANKING]

The warning lamp will illuminate when the engine is cranked. (After starting the engine, lamp lights out.) If the warning lamp fails turn on when cranked, the warning lamp electric circuit is faulty.

[WHEN VEHICLE IS RUNNING EVERY 12,500 MILES]

The warning lamp will continue to illuminate as long as the ignition switch is turned on. Clean the EGR system and reset the reset switch.

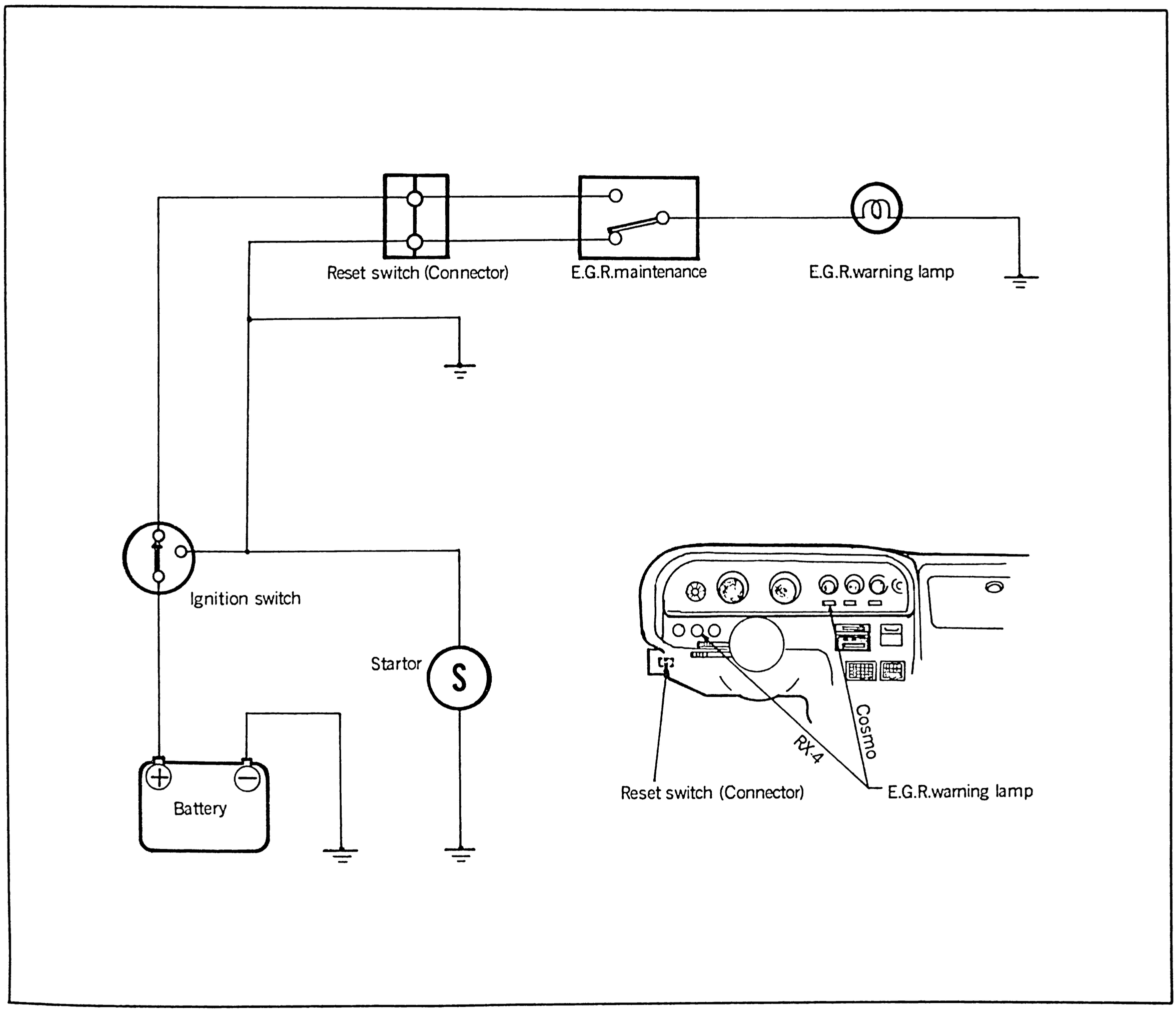

Fig. 4-18 EGR maintenance warning system

EMISSION CONTROL SYSTEM

KEY CHANGE

CALIFORNIA

RX-4 · Cosmo

KEY CHANGE

• A part of emission control system has been changed to satisfy the 1977 California requirement and to improve the fuel consumption as shown in the following table.

ITEM	1976 MODEL		
	M/T	A/T	M/T
1. AIR INJECTION AND THERMAL REACTOR SYSTEM			
① Air control valve			
• Configuration	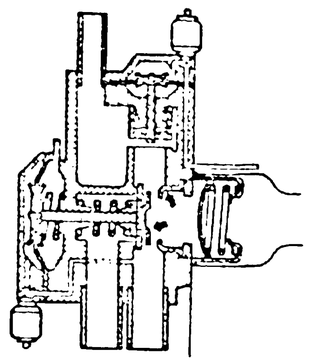		
• Operation (secondary air cut)	1. Over 248 ± 9°F (floor temperature) 2. Over 4.000 rpm (except deceleration)	1. Same as 1976 M/T 2. Same as 1976 M/T 3. Over 4.800 rpm with choke knob pulled out (except deceleration)	1. Same as 1976 M/T 2. Same as 1976 M/T 3. Abolished 4. Over 4.600 rpm (with from engine starting by 5. Over 2.200 rpm (after engine starting by using
• Operation (No. 1 relief valve (solenoid B) not operating area – Secondary air is not relieved to air cleaner and all air is injected into thermal reactor.)	1. Idle ~ 1.150 rpm (except deceleration) 2. 130 sec. time : ON (Within 120 sec. from engine starting by using choke)	1. Same as 1976 M/T 2. Same as 1976 M/T	1. Same as 1976 M/T 2. Same as 1976 M/T
② Thermal reactor • Configuration	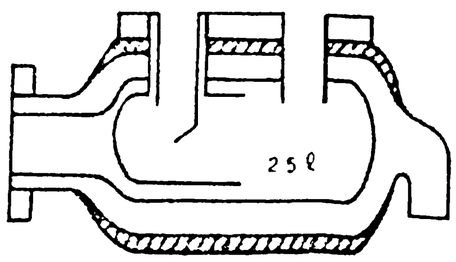		EXH SEC
• Capacity	2.5 ℓ	2.5 ℓ	2.0 ℓ
③ Heat ring	Not equipped	Not equipped	Equipped

EMISSION CONTROL SYSTEM

KEY CHANGE (CONT.)

CALIFORNIA

RX-4 · Cosmo

ITEM	1976 MODEL		
	M/T	A/T	M/
2. IGNITION CONTROL SYSTEM ① Methods of ignition control • Both leading and trailing spark plug ignition • Leading spark plug ignition only (Trailing spark plug does not ignite.) • Slightly retarded ignition of leading spark plug (Vacuum advance cut of trailing spark plug)	Equipped 1.150 ~ 3.500 rpm (except deceleration) after 130 sec. from engine starting by using choke 1.150 ~ 4.000 rpm within 130 sec. from engine starting by using choke (If the choke knob is pushed in within 130 sec., the engine speed will be changed form 1.150 ~ 4.000 rpm to 1.150 ~ 3.500 rpm.)	Equipped Same as 1976 M/T Same as 1976 M/T	Equipped 1.150 ~ 3.000 rpm tion and driving in 130 sec. from engi using choke 1.150 ~ 4.600 rpm from engine startin (If the choke knob within 130 sec., th be changed from 1.150 ~ 4.000 rpm.
3. DECELERATION CONTROL SYSTEM ① Coasting valve • Operation (fuel supply)	1. During deceleration over 1.150 rpm 2. Just after ignition is switched off.	1. Same as 1976 M/T 2. Same as 1976 M/T	1. Same as 1976 2. Same as 1976
② Anti-afterburn valve • Operation (air supply)	1. At the beginning of deceleration 2. Just after ignition is switched off.	1. Same as 1976 M/T 2. Same as 1976 M/T	1. Same as 1976 2. Same as 1976
4. FUEL ENRICHMENT SYSTEM ① Richer • Operation (fuel supply)	During deceleration over 1.150 rpm	Not equipped	Same as 1976 M/
② Power valve • Operation (fuel supply)	1. When manifold vacuum is over 2.0 in-Hg (50 mm-Hg) – ORDINARY OPERATION – 2. Over 5.500 rpm 3. Within 130 sec. from engine starting by using choke	1. Same as 1976 M/T 2. Same as 1976 M/T 3. Same as 1976 M/T 4. Continuously high load operation 5. Below 2.500 rpm with manifold vacuum below 11.8 mm-Hg.	1. Same as 1976 2. Abolished 3. Abolished 4. During accelera driving in 5th

EMISSION CONTROL SYSTEM

KEY CHANGE (CONT.)

CALIFORNIA

RX-4 · Cosmo

ITEM	1976 MODEL		
	M/T	A/T	M/T
5. HOT IDLE COMPENSATION SYSTEM ① Bimetal valve • Operating temperature	The system on the 1977 model is same as 1976 model. 65 ± 4°C	Same as 1976 M/T	Same as 1976 M/T
6. KICK-DOWN CONTROL SYSTEM	Not equipped	Equipped	Not equipped
7. CRANKCASE EMISSION CONTROL SYSTEM	The system on the 1977 model is same as 1976 model.		
8. EVAPORATIVE EMISSION CONTROL SYSTEM ① Air vent solenoid valve	Not equipped	Not equipped	Newly equipped
9. HEAT HAZARD PROTECTIVE AND WARNING SYSTEM	The system in the 1977 model is same as 1976 model. NOTE: On 1977 model, the trailing spark plug ignition controlled by the heat hazard sensor has been abo		
10. AUTOMATIC THROTTLE RELEASE SYSTEM ① Water temperature switch • Operation (Choke knob release)	When choke knob is pulled out (but not fully) above 153°F (Water temperature)	Same as 1976 M/T	When choke knob is pul (but not fully) above 1 (Water temperature)
② No. 2 timer (30 seconds) in control unit– • Operation (Choke knob release)	After 30 seconds from engine starting with choke knob fully pulled out	Same as 1976 M/T	Abolished
③ No. 2 vacuum switch and No. 2 delay valve • Operation (Choke knob) release	Not equipped	Not equipped	After about 30 seconds engine starting
11. INTAKE AIR TEMPERATURE CONTROL SYSTEM	The system on the 1977 model is same as 1976 model.		
12. THROTTLE OPENER SYSTEM (FOR AIR CONDITIONER)	The system on the 1977 model is same as 1976 model.		
13. EGR CONTROL AND EGR MAINTENANCE WARNING SYSTEM	Not equipped	Not equipped	Newly equipped

EMISSION CONTROL SYSTEM

KEY CHANGE (CONT.)

CALIFORNIA

RX-4 · Cosmo

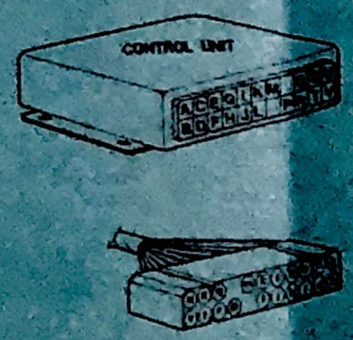

1977 Emission control system

AIR INJECTION AND THERMAL REACTOR SYSTEM

DESCRIPTION

CALIFORNIA

RX-4 · Cosmo

DESCRIPTION

The air injection and thermal reactor system serves to blow compressed air (secondary air) into the hot gases discharged from the engine exhaust ports for the purpose of reburning the unburnt HC and CO.

[WHEN ENGINE IS OPERATING]

The fresh air from the air cleaner compressed by the air pump is injected into the engine exhaust ports adjacent to the thermal reactor.

[WHEN EXCESSIVE AIR PRESSURE IS CREATED]

The some of fresh air from the air pump is released to the thermal reactor cooling jacket to prevent the damage of air pump and loss of power. —— Operation of No. 1 relief valve ——

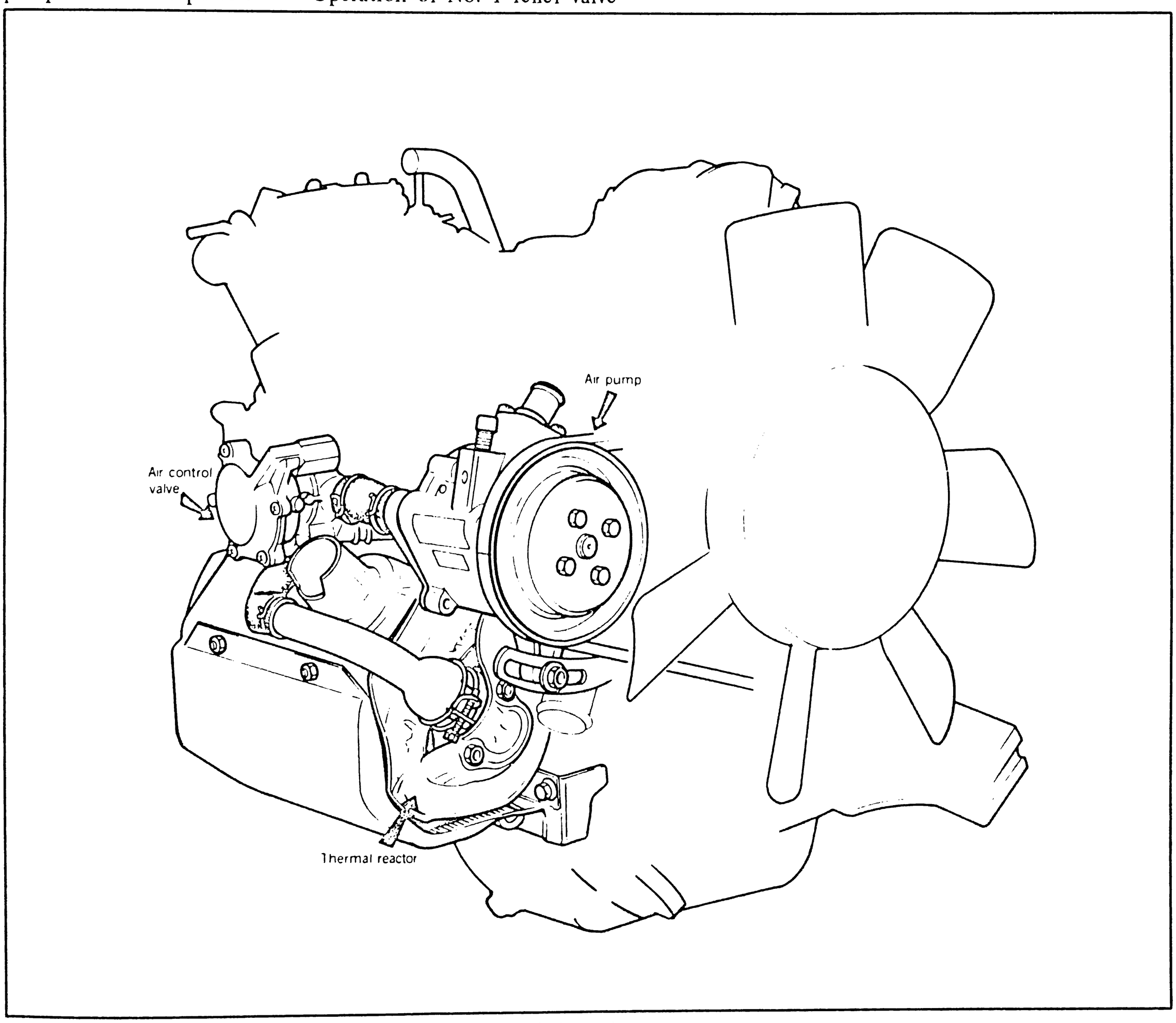

Fig. 4-19 Air injection and thermal reactor system

- ○ WHEN ENGINE SPEED IS OVER *4,600 RPM WITHIN 130 SEC. FROM ENGINE STARTING BY USING CHOKE (except deceleration)
- ○ WHEN ENGINE SPEED IS OVER *4,600 RPM WITHIN 130 SEC. FROM ENGINE STARTING BY USING CHOKE (except deceleration)
- ○ WHEN ENGINE SPEED IS OVER 4.000 RPM (except deceleration and cold starting)
- ○ WHEN FLOOR TEMPERATURE IS OVER 248°F

*mark: Choke knob is pulled out.

The fresh air from the air pump is not injected into the engine exhaust ports and is supplied into the thermal reactor cooling air jacket to prevent the thermal reactor from overheating. —Operation of air cut valve—

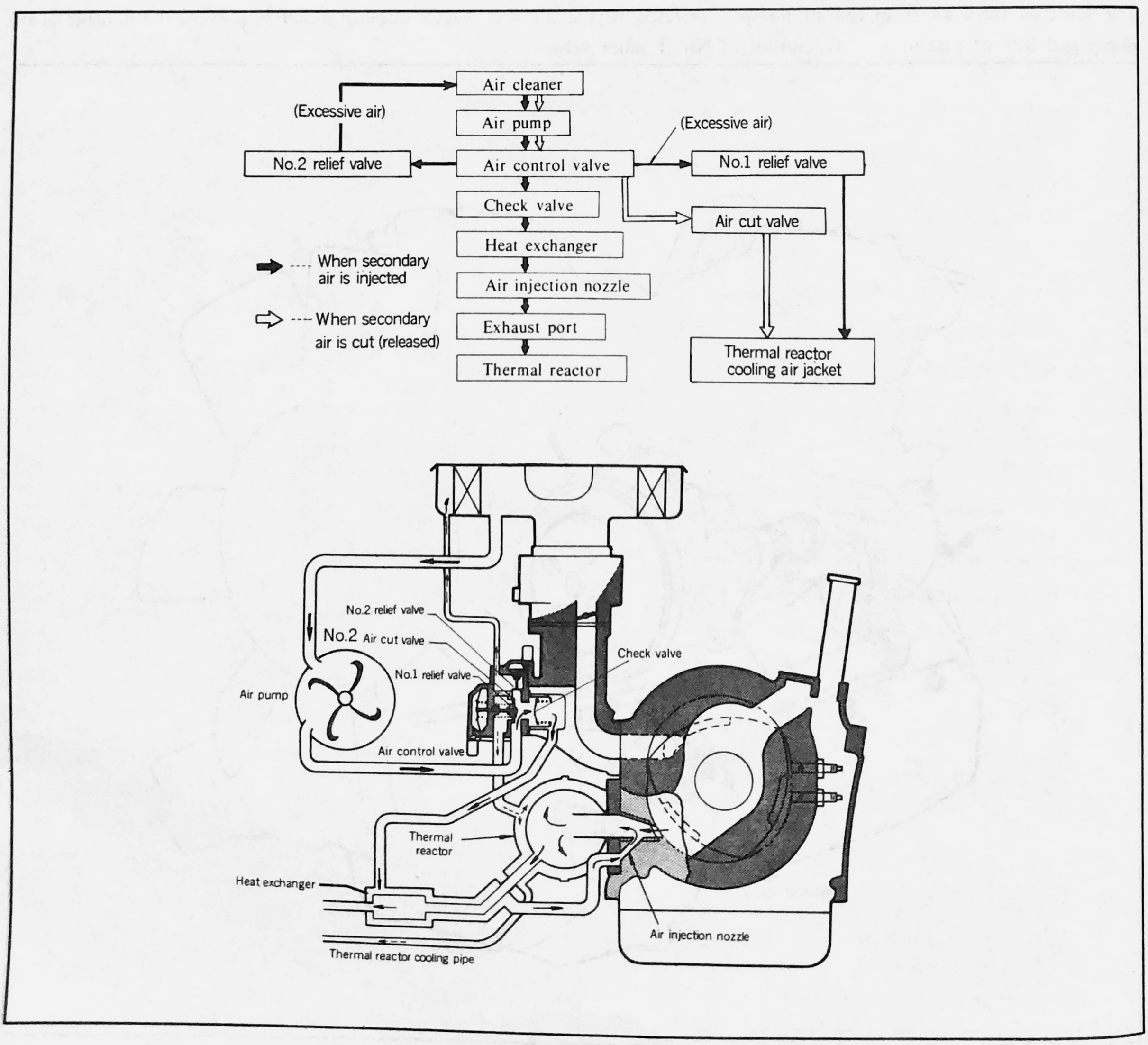

Fig. 4-20 Air injection and thermal reactor system

○ WHEN ENGINE SPEED IS 1.150 ~ 4.000 RPM (except deceleration and cold starting)
○ DURING DECELERATION (Except: Engine speed is under 1,150 rpm)

The some of fresh air supplying to the engine exhaust ports is released to the air cleaner to obtain the balanced fresh air-exhaust gas mixture for reburning. —— Operation of No. 2 relief valve ——

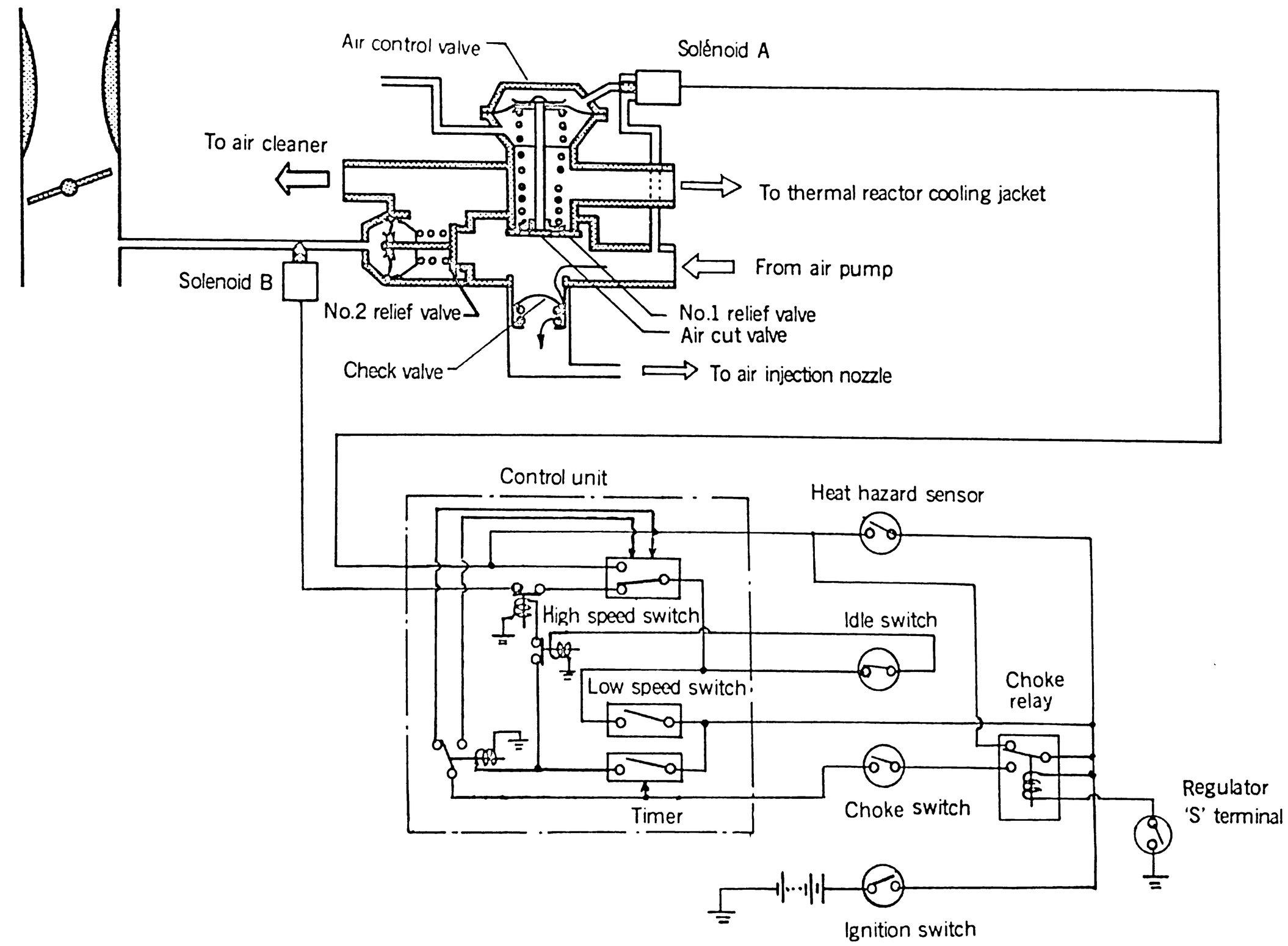

Fig. 4-21 Air injection and thermal reactor system

IGNITION CONTROL SYSTEM

DESCRIPTION

CALIFORNIA

RX-4 M/T · Cosmo M/T

DESCRIPTION

This system serves to reduce the HC and CO by warming up the thermal reactor.

[WHEN ENGINE SPEED IS 1.150 ~ 4.600 RPM (except deceleration) IN ENGINE COLD]*

- The leading ignition (spark plug) is slightly retarded.
  The trailing breaker point is used to ignite (retard) the leading spark plug.
  (The vacuum sensing passage of trailing distributor vacuum advance unit is closed to prevent the trailing breaker point from advancing.)
- The trailing spark plug does not ignite.

NOTE: If the choke knob is pushed in within 130 sec. from engine starting by pulling choke knob, the engine speed will be changed from 1.150 ~ 4.600 rpm to 1.150 ~ 4.000 rpm.

* ENGINE COLD: Within 130 sec. from engine starting by using choke

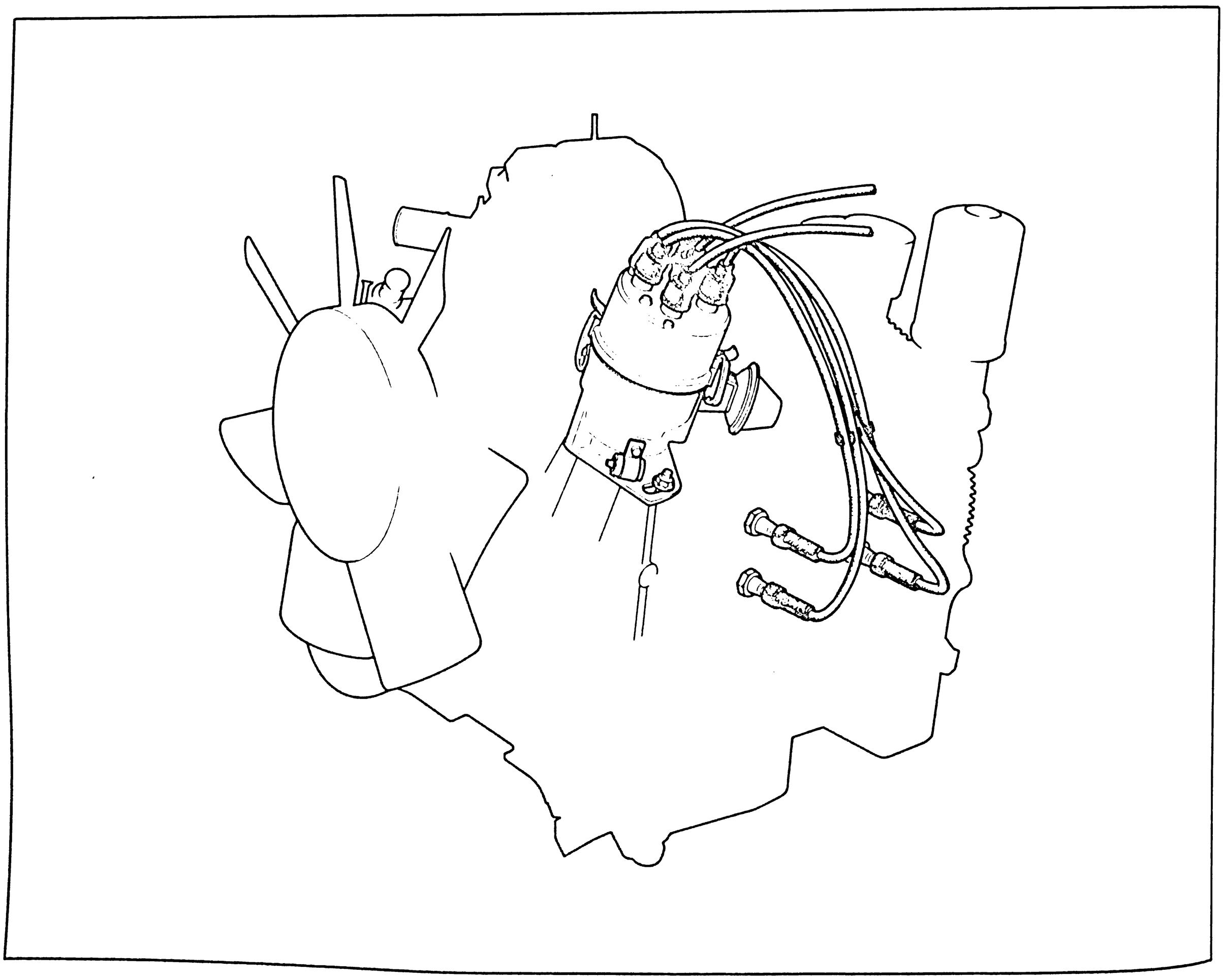

Fig. 4-22 Ignition control system

IGNITION CONTROL SYSTEM	CALIFORNIA
DESCRIPTION (CONT.)	RX-4 M/T · Cosmo M/T

[WHEN ENGINE SPEED IS 1.150 ~ 3.000 RPM (except deceleration) IN * ENGINE HOT]

- The leading ignition (spark plug) is ignited (not retarded).
- The trailing spark plug does not ignite.

NOTE: When driving the vehicle in 5th gear, the trailing spark plug is ignited.

* ENGINE HOT: After 130 sec. from engine starting by using choke

[OTHER CASES]

- Both leading and trailing spark plugs are ignited.

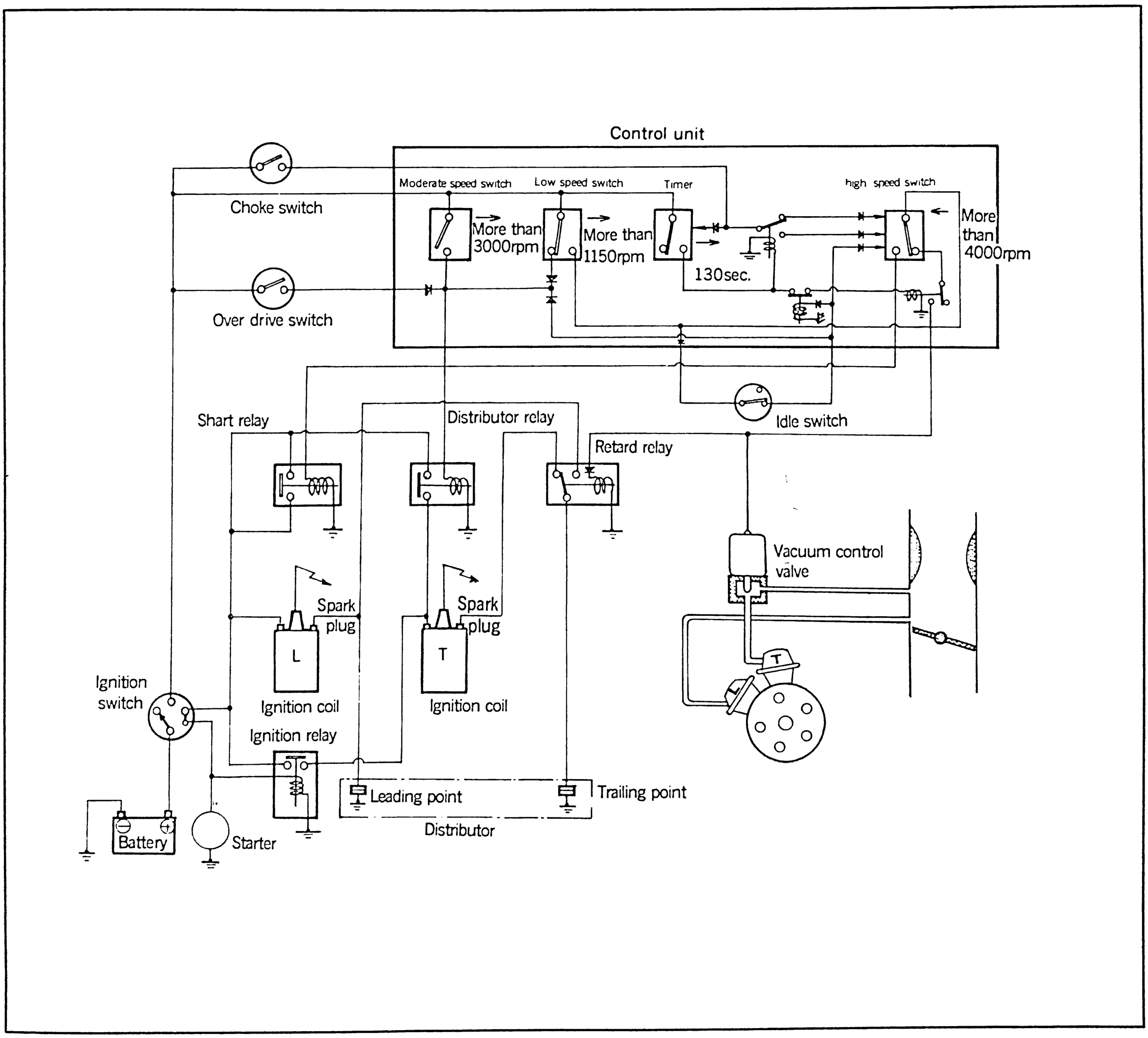

Fig. 4-23 Ignition control system

4

IGNITION CONTROL SYSTEM

DESCRIPTION

CALIFORNIA

RX-4 A/T · Cosmo A/T

DESCRIPTION

This system serves to reduce the HC and CO by warming up the thermal reactor.

[WHEN ENGINE SPEED IS 1.150 ~ 4.600 RPM (except deceleration) IN * ENGINE COLD]

- ○ The leading ignition (spark plug) is slightly retarded.
  The trailing breaker point is used to ignite (retard) the leading spark plug.
  (The vacuum sensing passage of trailing distributor vacuum advance unit is closed to prevent the trailing breaker point from advancing.)
- ○ The trailing spark plug does not ignite.

NOTE: If the choke knob pushed in within 130 sec. from engine starting by using choke, the engine speed will be changed from 1.150 ~ 4.600 rpm to 1.150 ~ 4.000 rpm.

* ENGINE COLD: Within 130 sec. from engine starting by using choke

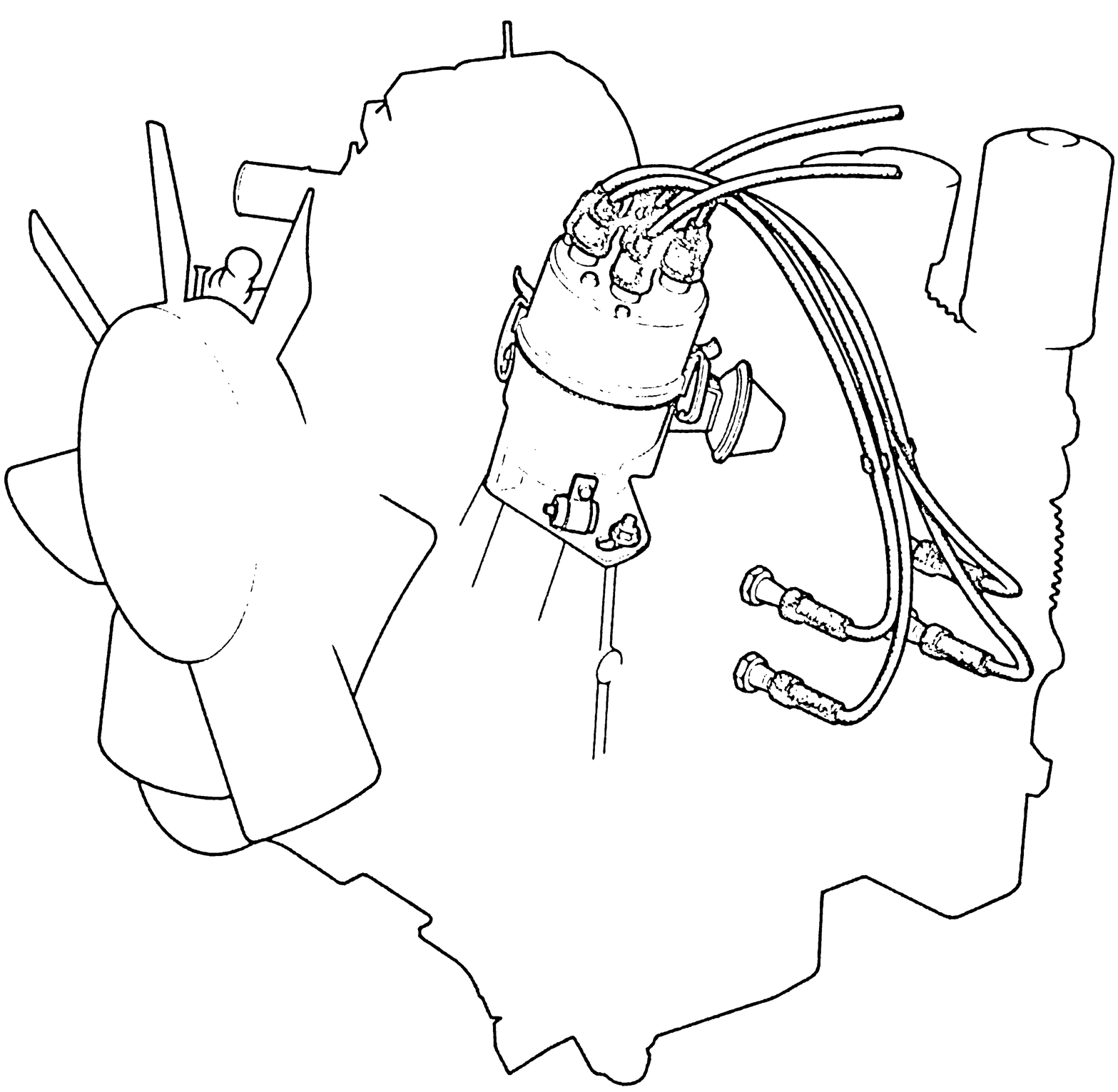

Fig. 4-24 Ignition control system

IGNITION CONTROL SYSTEM	CALIFORNIA
DESCRIPTION (CONT.)	RX-4 A/T · Cosmo A/T

[WHEN ENGINE SPEED IS 1.150 ~ 2.500 RPM (except deceleration) IN ENGINE HOT*]

○ The leading ignition (spark plug) is ignited (not retarded).

○ The trailing spark plug does not ignite.

* ENGINE HOT: After 130 sec. from engine starting by using choke

[OTHER CASES]

○ Both leading and trailing spark plugs are ignited.

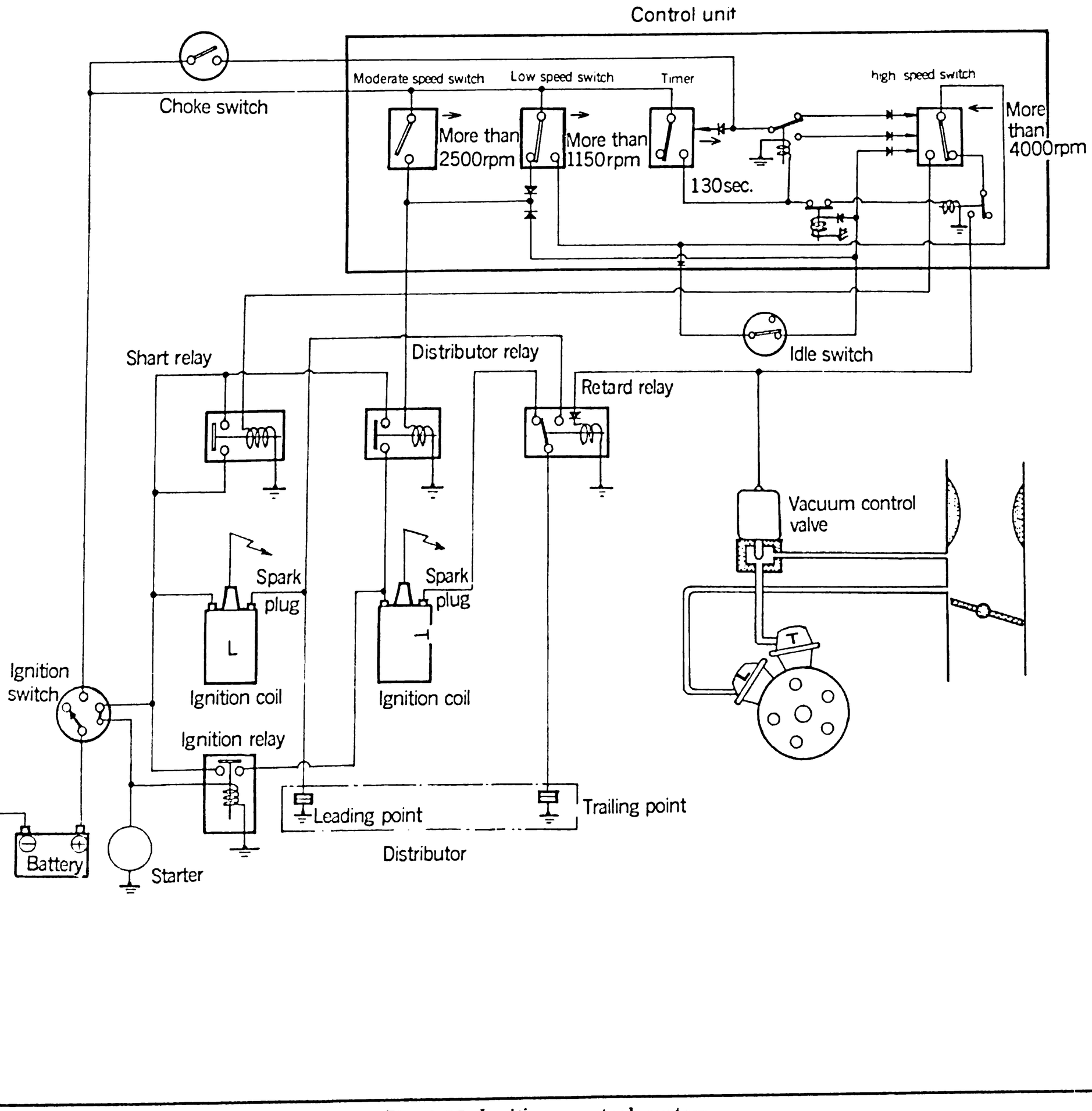

Fig. 4-25 Ignition control system

FUEL ENRICHMENT SYSTEM

CALIFORNIA

DESCRIPTION

RX-4 M/T · Cosmo M/T

DESCRIPTION

The fuel enrichment system is designed to maintain a balanced air-fuel mixture for reducing the HC, CO and NOx and improving the driveability.

[DURING DECELERATION OVER 1.150 RPM]
The richer supplies an additional fuel into the intake manifold.

[WHEN MANIFOLD VACUUM IS 2.0 IN-HG (ordinally operation)]
The power valve supplies an additional fuel into the intake manifold.

[DURING ACCELERATION (except driving in 5th gear)]
The power valve supplies an additional fuel into the intake manifold.

[WITHIN 130 SEC. FROM ENGINE STARTING WITH CHOKE KNOB PULLED OUT]
The power valve supplies an additional fuel into the intake manifold.

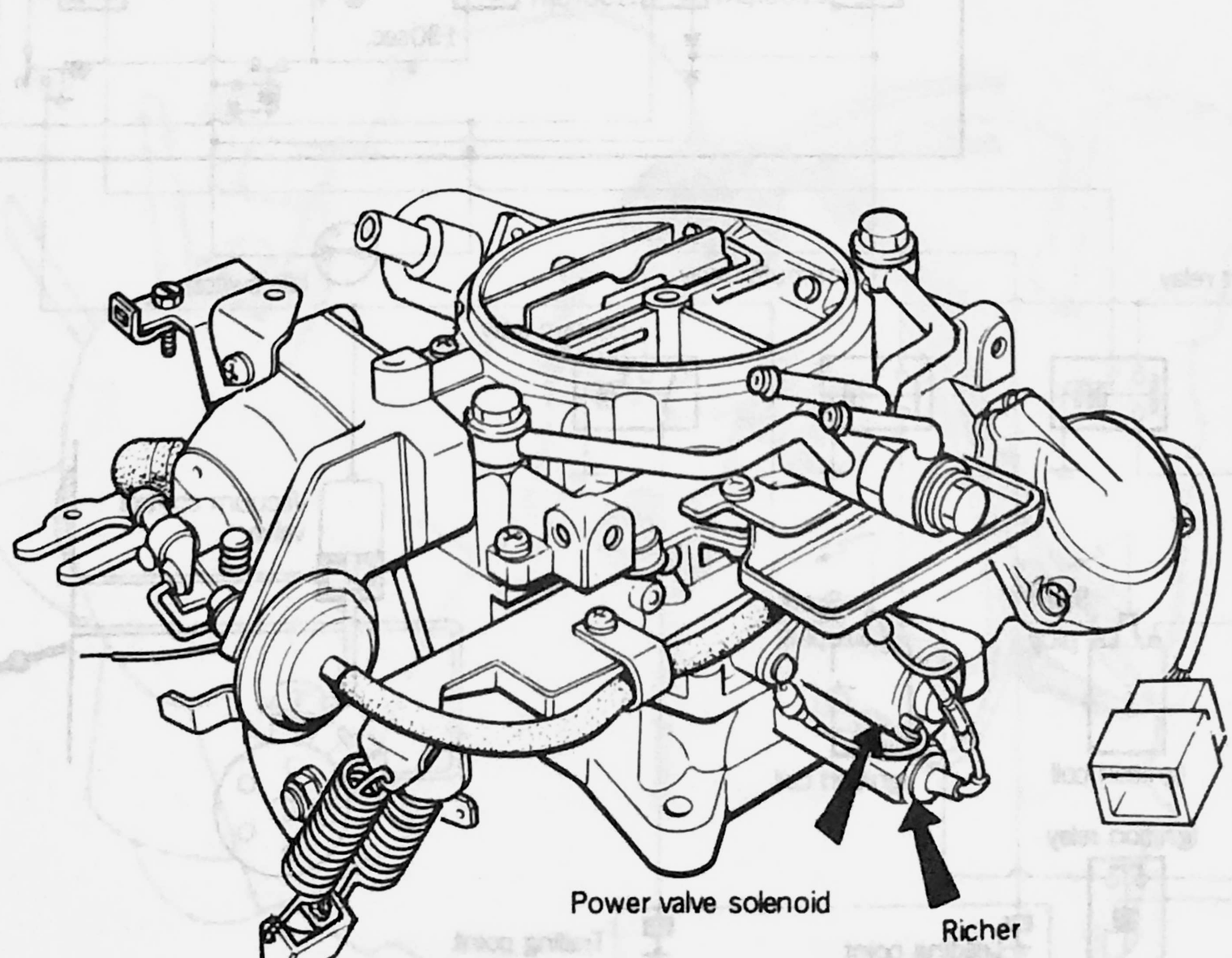

Fig. 4-25 Fuel enrichment system

FUEL ENRICHMENT SYSTEM

DESCRIPTION (CONT.)

CALIFORNIA

RX-4 M/T · Cosmo M/T

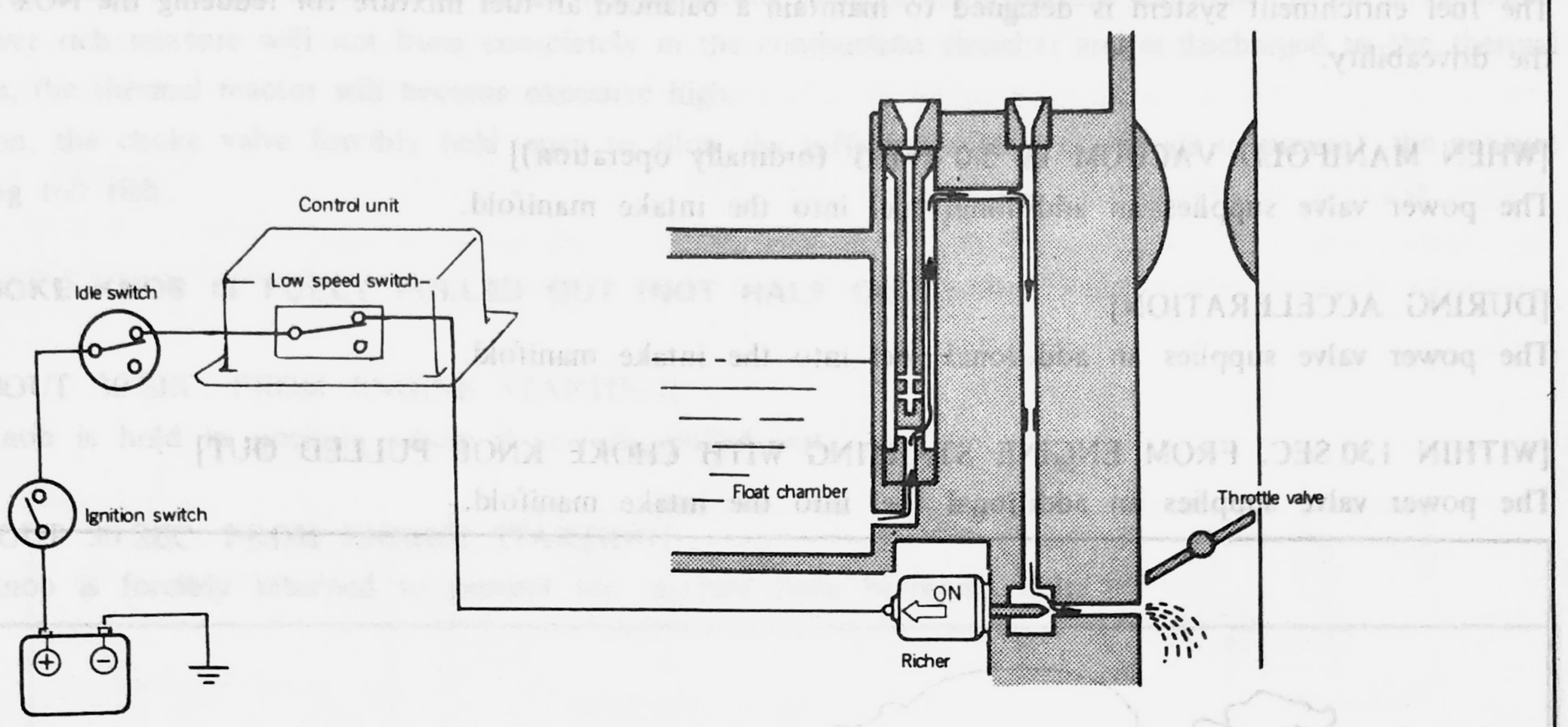

Fig. 4-26 Operation of richer

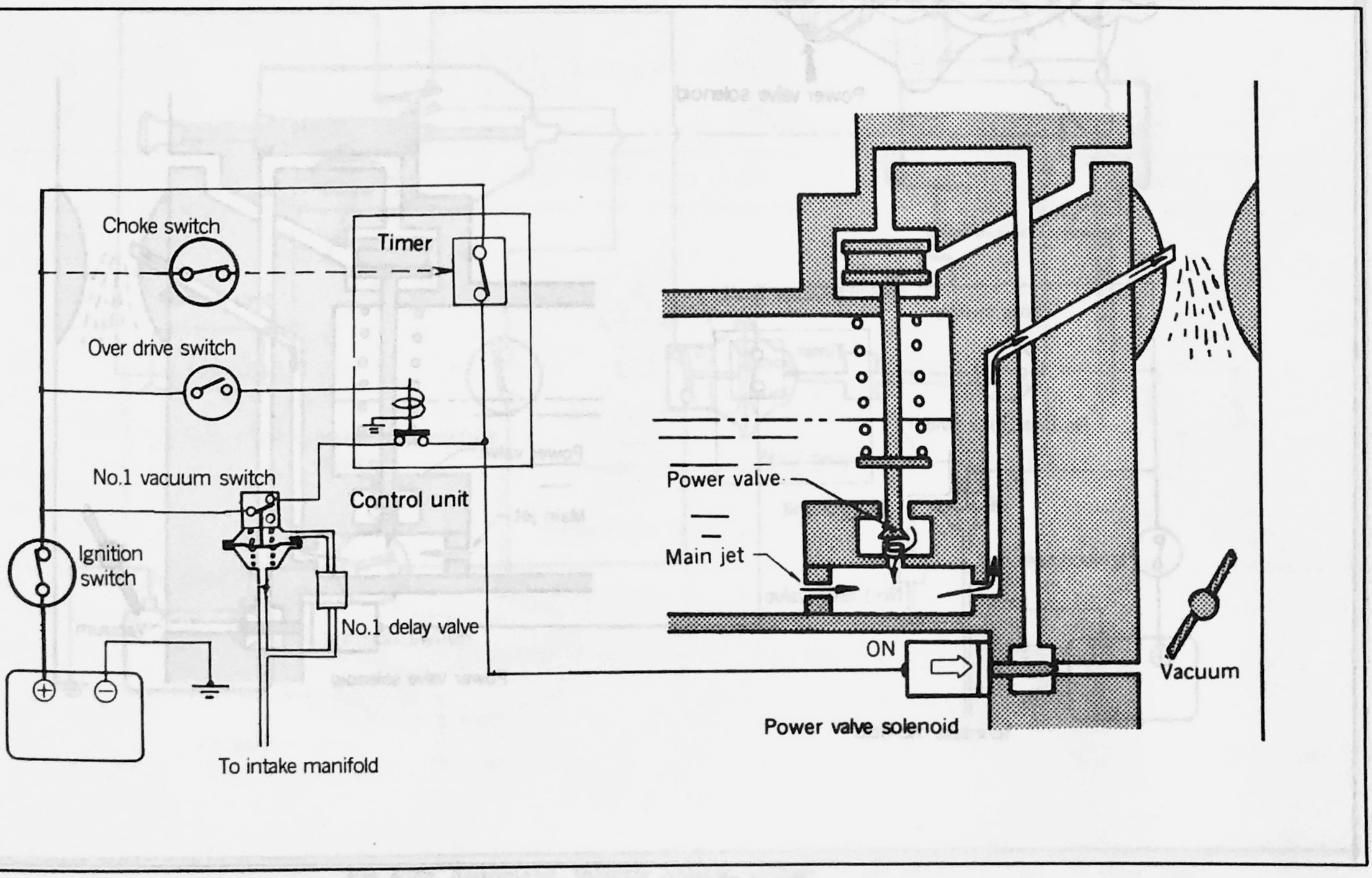

Fig. 4-27 Operation of power valve

FUEL ENRICHMENT SYSTEM

CALIFORNIA

DESCRIPTION

RX-4 A/T · Cosmo A/T

DESCRIPTION

The fuel enrichment system is designed to maintain a balanced air-fuel mixture for reducing the NOx and improving the driveability.

[WHEN MANIFOLD VACUUM IS 2.0 IN-HG (ordinally operation)]
The power valve supplies an additional fuel into the intake manifold.

[DURING ACCELERATION]
The power valve supplies an additional fuel into the intake manifold.

[WITHIN 130 SEC. FROM ENGINE STARTING WITH CHOKE KNOB PULLED OUT]
The power valve supplies an additional fuel into the intake manifold.

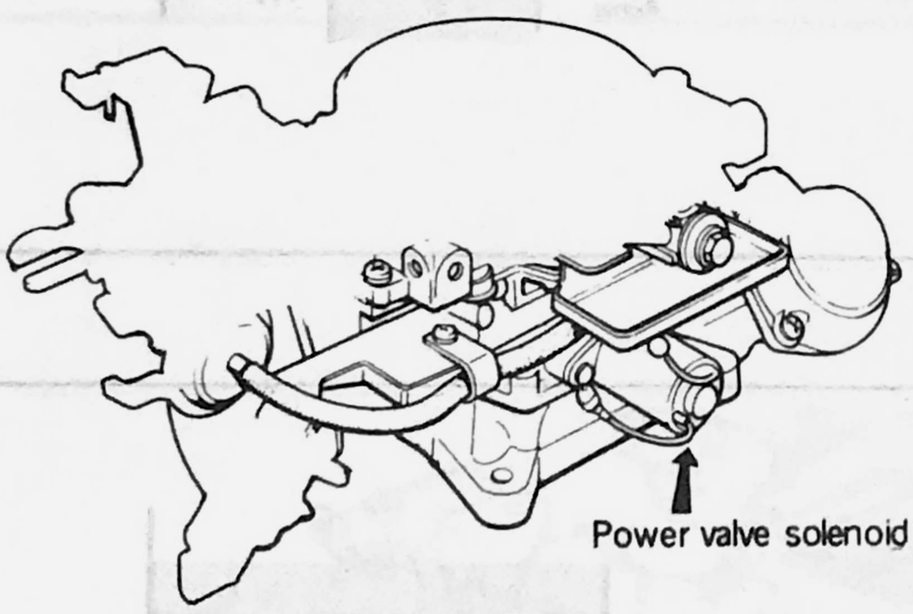

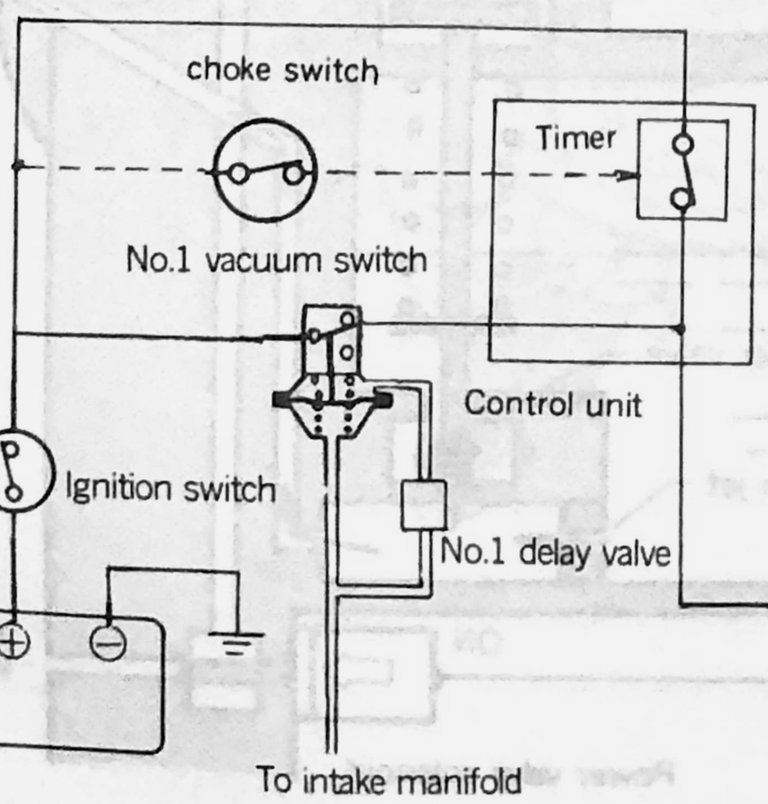

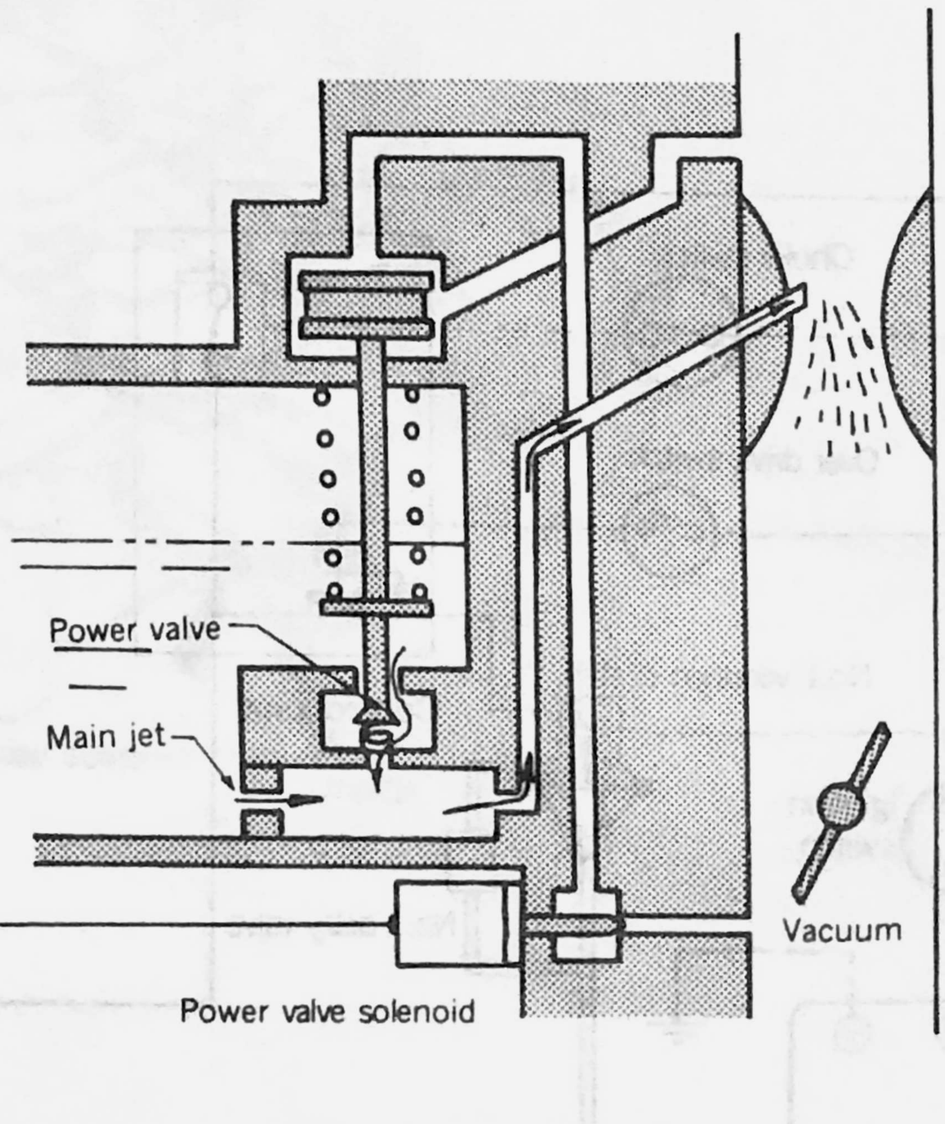

Fig. 4-28 Fuel enrichment system

AUTOMATIC THROTTLE RELEASE SYSTEM

DESCRIPTION

CALIFORNIA

RX-4 · Cosmo

DESCRIPTION

If the vehicle is driven with the choke knob pulled out for a long time, the rich mixture will drawn in the intake manifold. This over rich mixture will not burn completely in the combustion chamber and is discharged to the thermal reactor. Thus, the thermal reactor will become excessive high.
For this reason, the choke valve forcibly held open to allow the sufficient supply of the air to prevent the mixture from becoming too rich.

o WHEN CHOKE KNOB IS FULLY PULLED OUT (NOT HALF OUT)

[WITHIN ABOUT 30 SEC. FROM ENGINE STARTING]
The choke knob is hold in position where it is fully pulled out.

[AFTER ABOUT 30 SEC. FROM ENGINE STARTING]
The choke knob is forcibly returned to prevent the mixture from becoming rich.

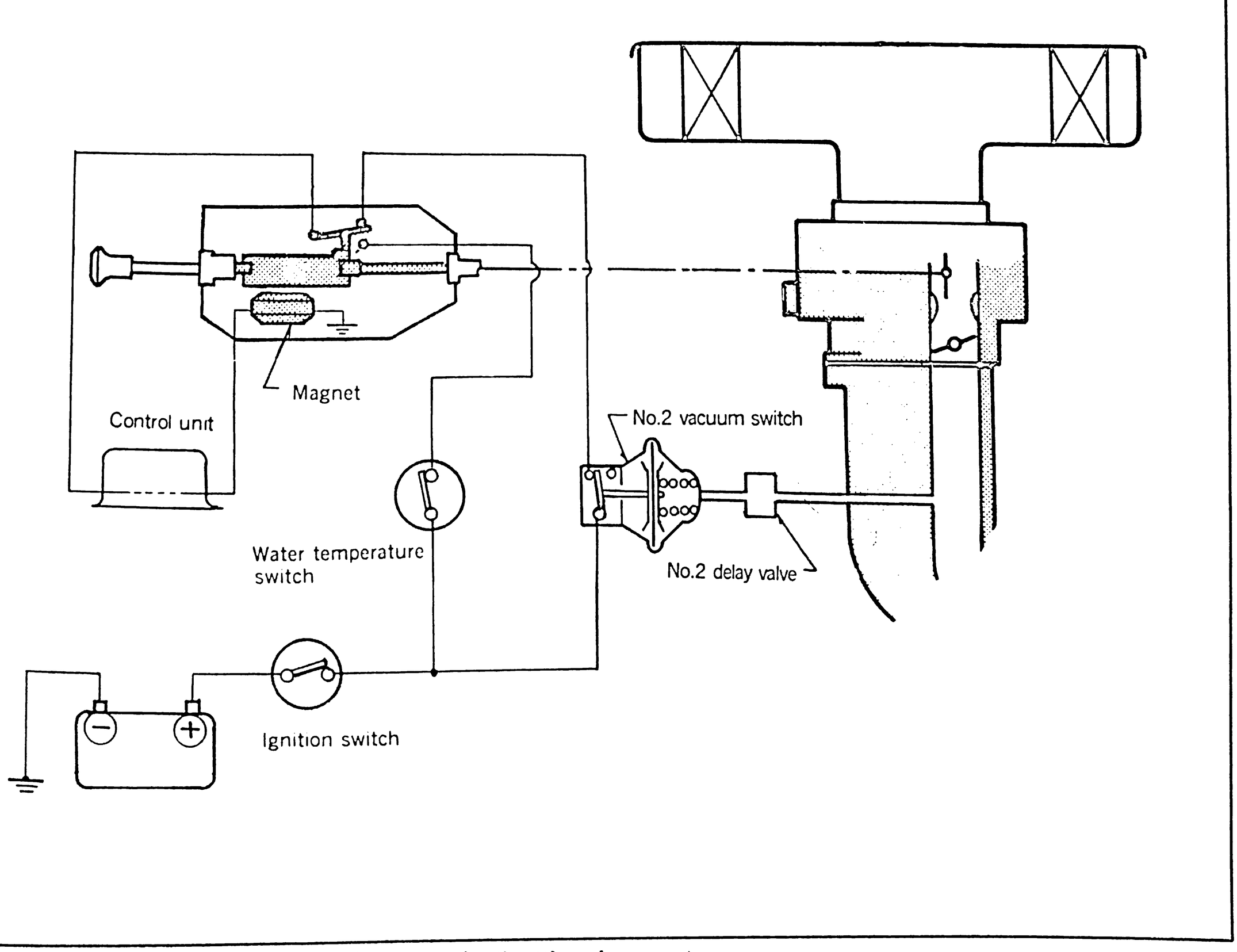

Fig. 4-29 Automatic throttle release system

- WHEN CHOKE KNOB IS PULLED OUT HALF WAY (NOT FULLY OUT)

[WHEN WATER TEMPERATURE IS BELOW 140 ± 6°F]
The choke knob is hold in position where it is pulled out.

[WHEN WATER TEMPERATURE IS ABOVE 140 ± 6°F]
The choke knob is forcibly returned to prevent the mixture from becoming rich.

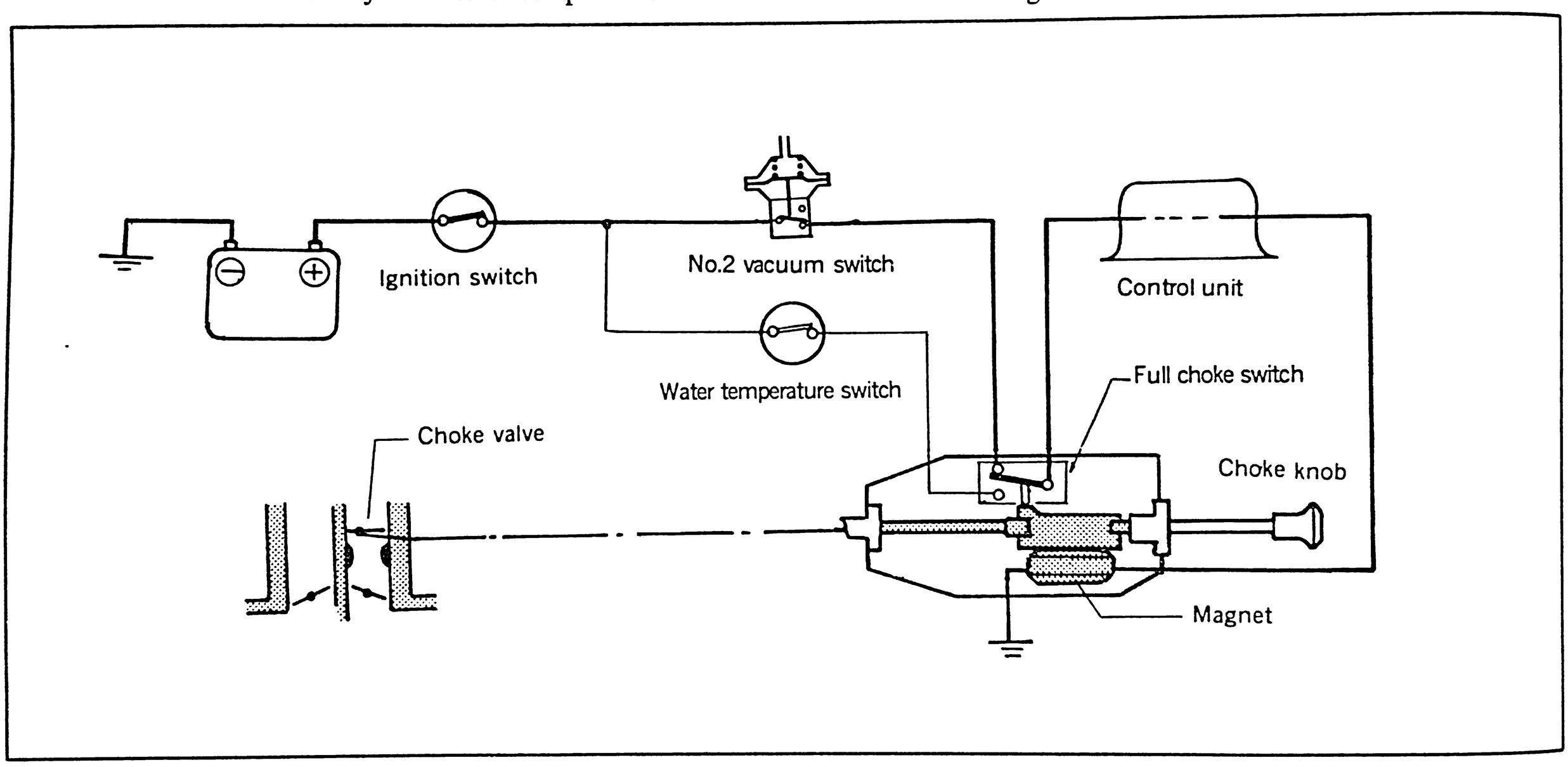

Fig. 4-30 System operation (knob is hold.) —— When choke knob is fully pulled out

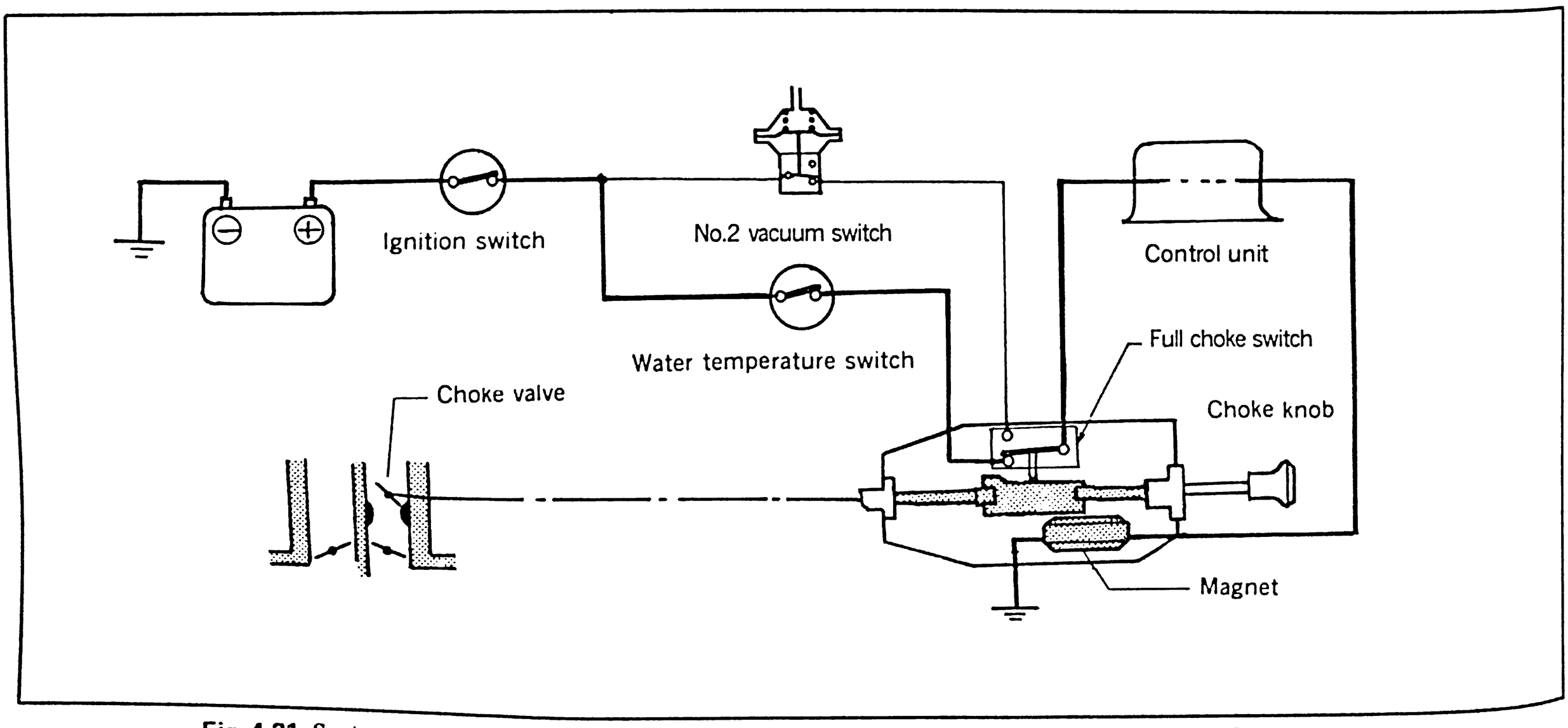

Fig. 4-31 System operation (knob is hold.) —— When choke knob is pulled out half way

EGR CONTROL SYSTEM

CALIFORNIA

DESCRIPTION

RX-4 A/T · Cosmo A/T

DESCRIPTION

The EGR control system is used to dilute the air-fuel mixture in the intake manifold with a small percentage of exhaust gas. The exhaust gas does not burn and absorbs some of the combustion heat. This has the effect of lowering the temperature in the chamber and reduces emission of NOx (oxides of nitorgen).

[DURING ACCELERATION AT ENGINE HOT CONDITION (when water temperature is over 140°F after 130 sec. from engine starting by using choke)]

A part of exhaust gases from the exhaust manifold is led into the intake manifold through the EGR valve.

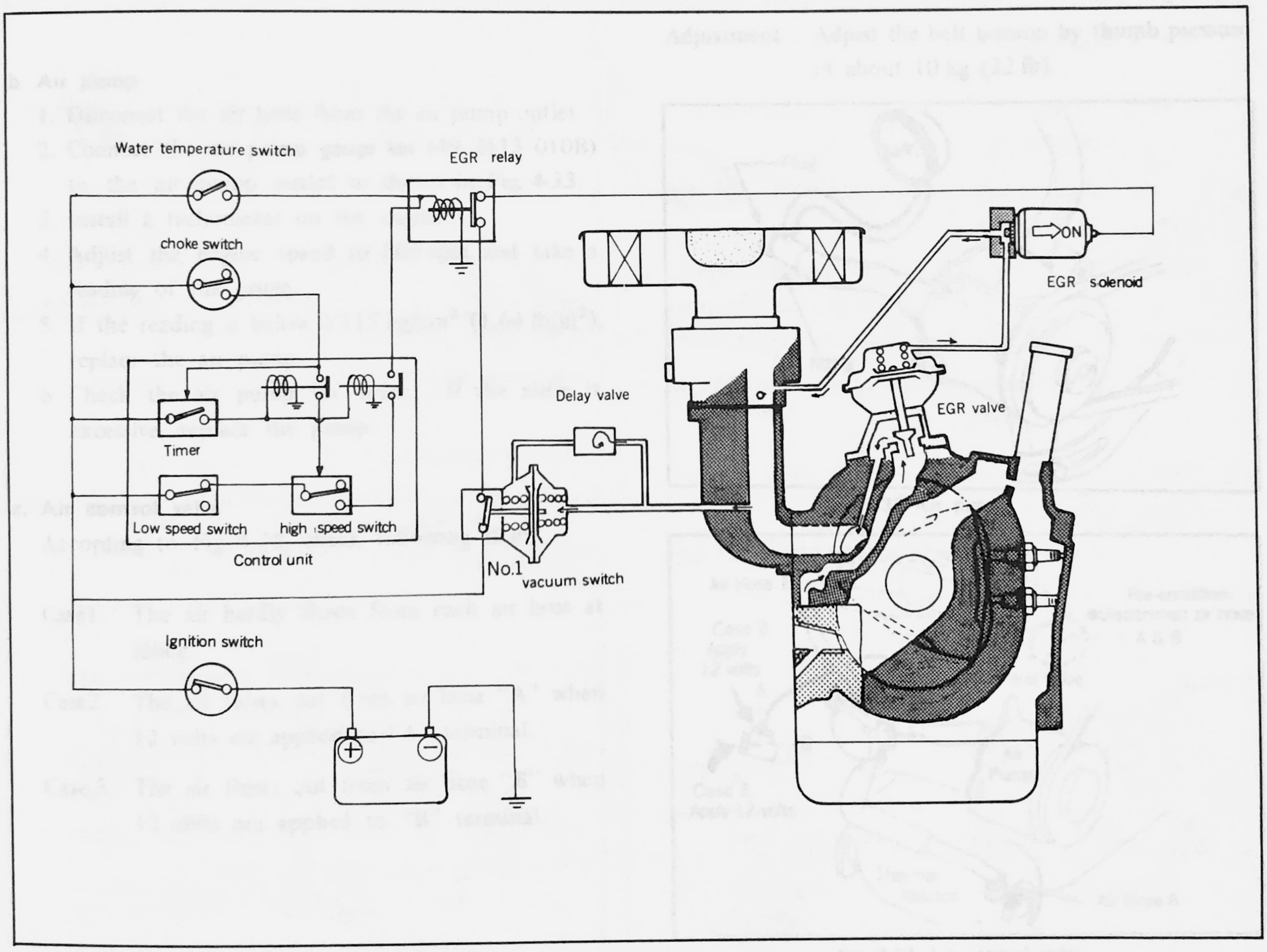

Fig. 4-32 EGR control system

AIR INJECTION AND THERMAL REACTOR SYSTEM ○ CHECKING	FEDERAL (CANADA) CALIFORNIA	A/T M/T

CHECKING

a. Air pump drive belt

1. Inspect the drive belt for crack, deformation and wear.
2. Inspect for adherence of oil or grease on the belt.
3. Check the belt tension with the standard tension.

Standard belt tension:

	Inspection location	Tension
Air pump belt	Air pump pulley & Water pump pulley	9~11 mm (0.36~0.44 in)

Adjustment: Adjust the belt tension by thumb pressure of about 10 kg (22 lb).

b. Air pump

1. Disconect the air hose from the air pump outlet.
2. Connect the **air pump gauge set** (49 2113 010B) to the air pump outlet as shown in Fig. 4-33.
3. Install a tachometer on the engine.
4. Adjust the engine speed to 800 rpm and take a reading of the gauge.
5. If the reading is below 0.115 kg/cm^2 (1.64 lb/in^2), replace the air pump.
6. Check the air pump for noise. If the noise is excessive, replace the pump.

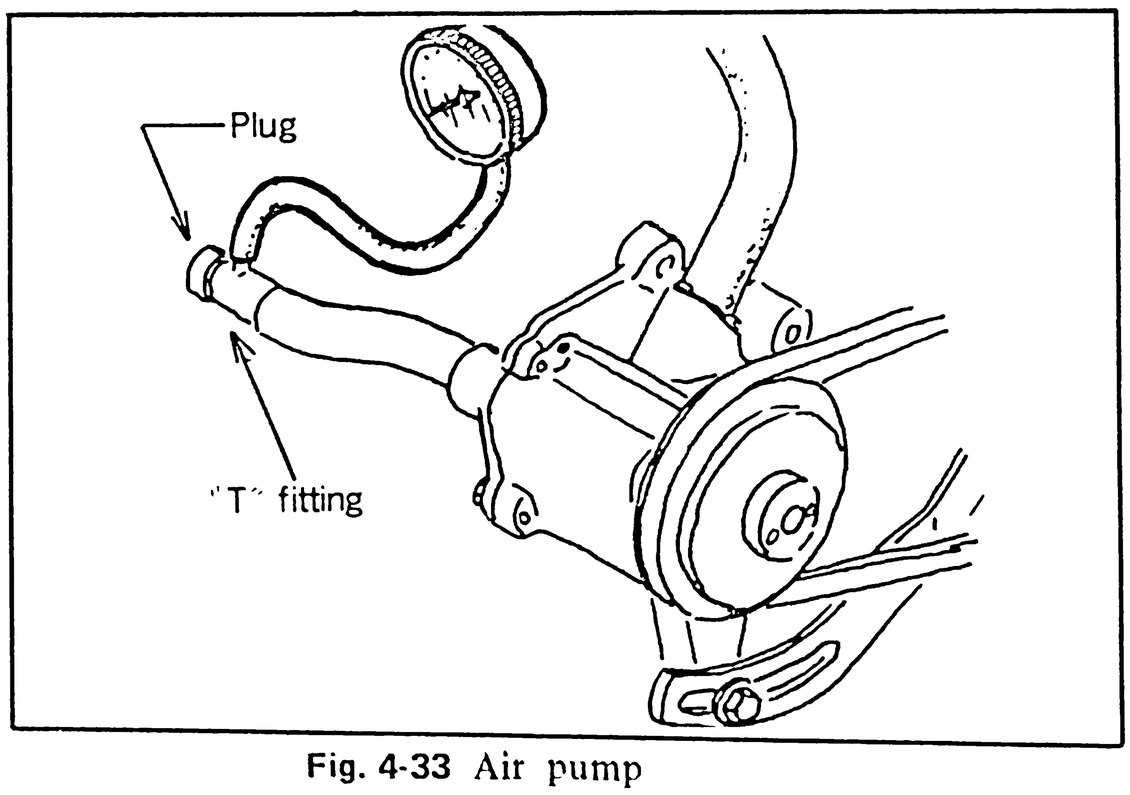

Fig. 4-33 Air pump

c. Air control valve

According to Fig. 4-34, check following items.

Case1. The air hardly flows from each air hose at idling.

Case2. The air flows out from air hose "A" when 12 volts are applied to "A" terminal.

Case 3. The air flows out from air hose "B" when 12 volts are applied to "B" terminal.

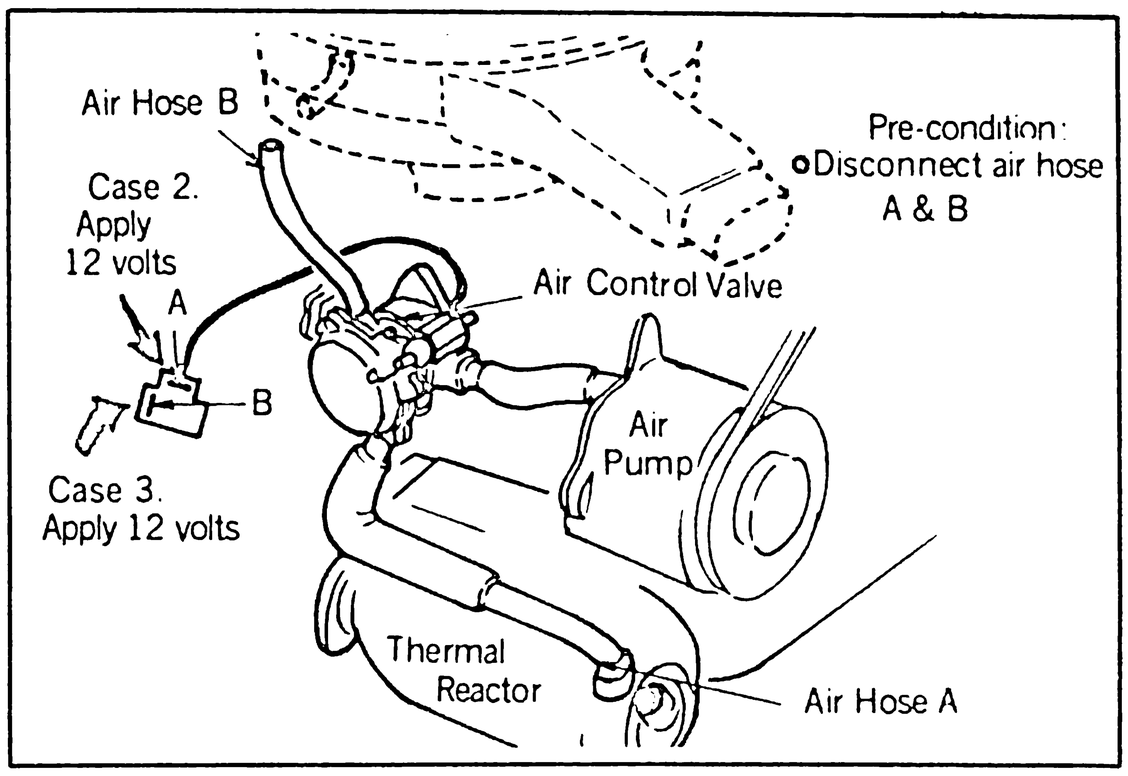

Fig. 4-34 Air control valve

TROUBLE SYMPTOM	POSSIBLE CAUSE	REPAIR
○ High idle CO and HC ○ After-burn or Bucking	○ Air leaks from the air control valve ○ A current flows to the "A" terminal at idling Wrong signal from control unit Heat hazard sensor short-circuited	○ Check air control valve ○ Check the function of control unit (next page). If necessary, replace the control unit. ○ Replace heat hazard sensor

AIR INJECTION AND THERMAL REACTOR SYSTEM • CHECKING	FEDERAL (CANADA)	A/T M/T

d. FEDERAL MODELS: Air injection system

The air injection and thermal reactor system is controlled by the control unit. The function of control unit concerning an air injection should be checked according to the following procedures.

NOTE: To check the air injection system, idle switch, fuse (5A), choke switch, heat hazard sensor, choke relay should be normal.

d-1. "A" terminal of the air control valve coupler. Check following items.

Case 1. Disconnect the coupler of water temperature switch.

A current begins flowing at 4000± 400 rpm to the meter.

Case 2. Short-circuit the coupler of water temperature switch and adjust the engine speed to 2000 rpm by setting the choke knob.

A current begins flowing at 4600± 400 rpm to the meter.

d-2. "B" terminal of the air control valve coupler. Check following item.

A current begins flowing at 1150± 100 rpm.

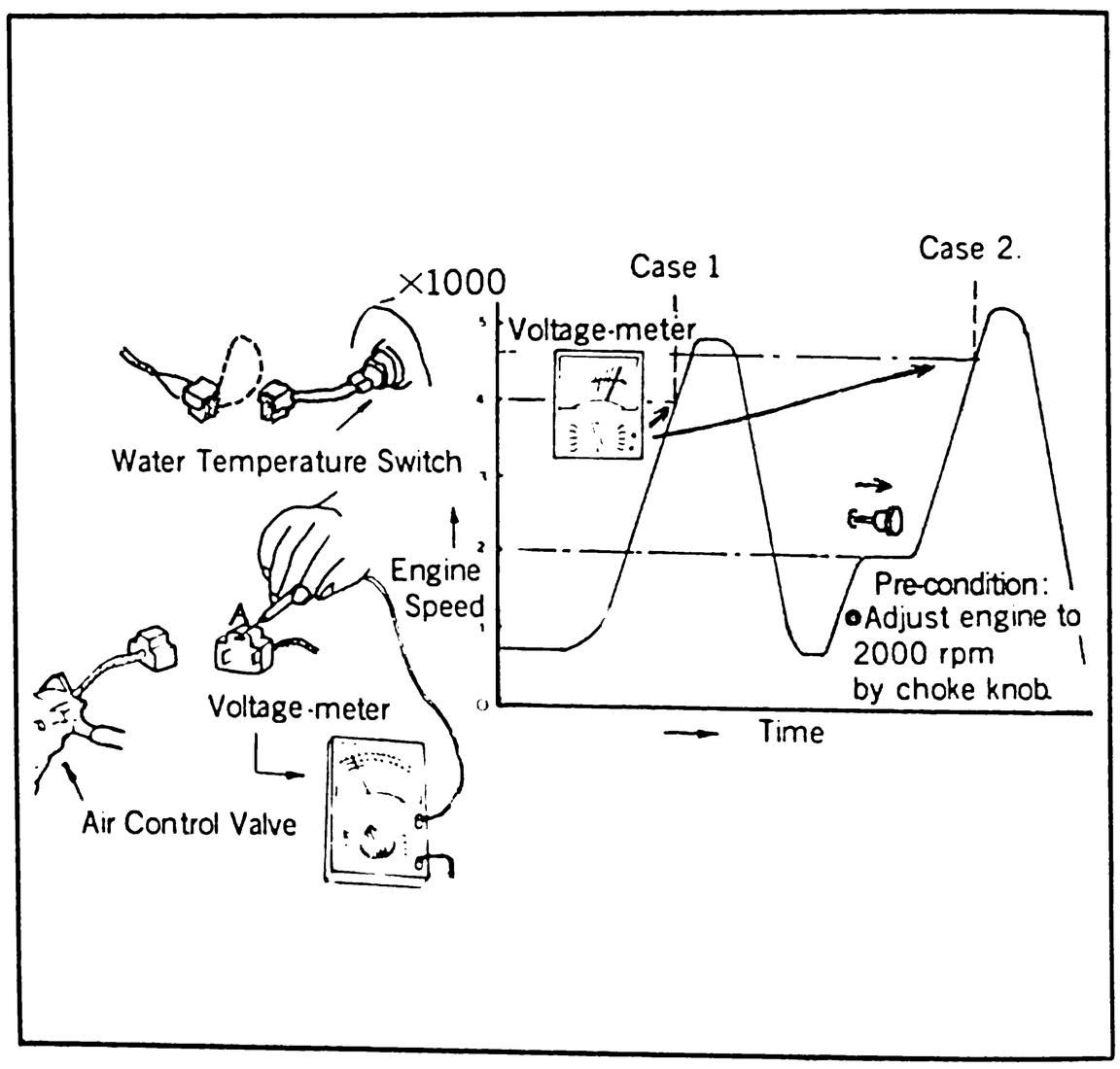

Fig. 4-35 "A" terminal (Wire harness)

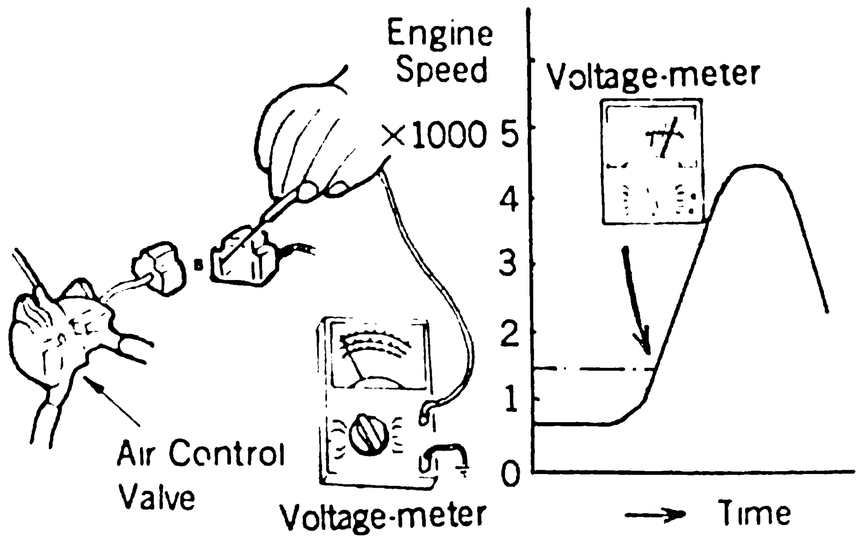

Fig. 4-36 "B" terminal (Wire harness)

d. CALIFORNIA MODELS: Air injection system

The air injection and thermal reactor system is controlled by the control unit. The function of control unit concerning an air injection should be checked according to the following procedures.

NOTE: To check the air injection system, idle switch, fuse (5A), choke switch, heat hazard sensor, choke relay should be normal.

d-1. "A" terminal of the air control valve coupler. Check following items.

Case 1. Disconnect the coupler of water temperature switch.

A current begins flowing at 4000±400 rpm to the meter.

Case 2. Short-circuit the coupler of water temperature switch and adjust the engine speed to 2000 rpm by setting the choke knob.

A current begins flowing at 4600±400 rpm within 130 seconds from engine start.

A current begins flowing at 2200±400 rpm after 130 seconds from engine start.

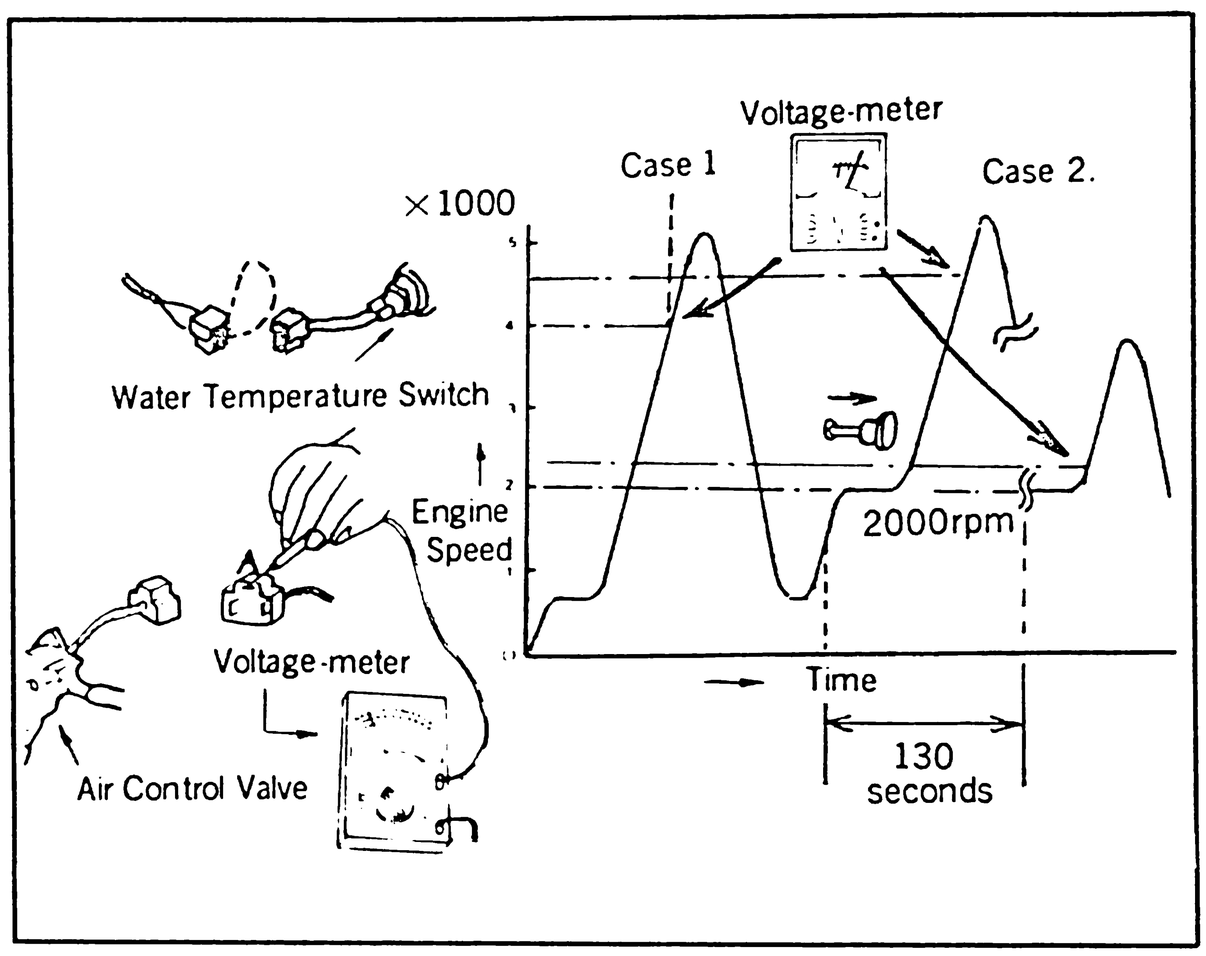

Fig. 4-37 "A" terminal (Wire harness)

d-2. "B" terminal of the air control valve coupler. Check following items.

Case 1. Disconnect the coupler of water temperature switch.

A current stops flowing at 4000±400 rpm to the meter

Case 2. Short-circuit the coupler of water temperature switch and adjust the engine speed to 2000 rpm by setting the choke knob.

A current stops flowing at 4600±400 rpm within 130 seconds from engine start.

A current stops flowing at 2200±400 rpm after 130 seconds from engine start.

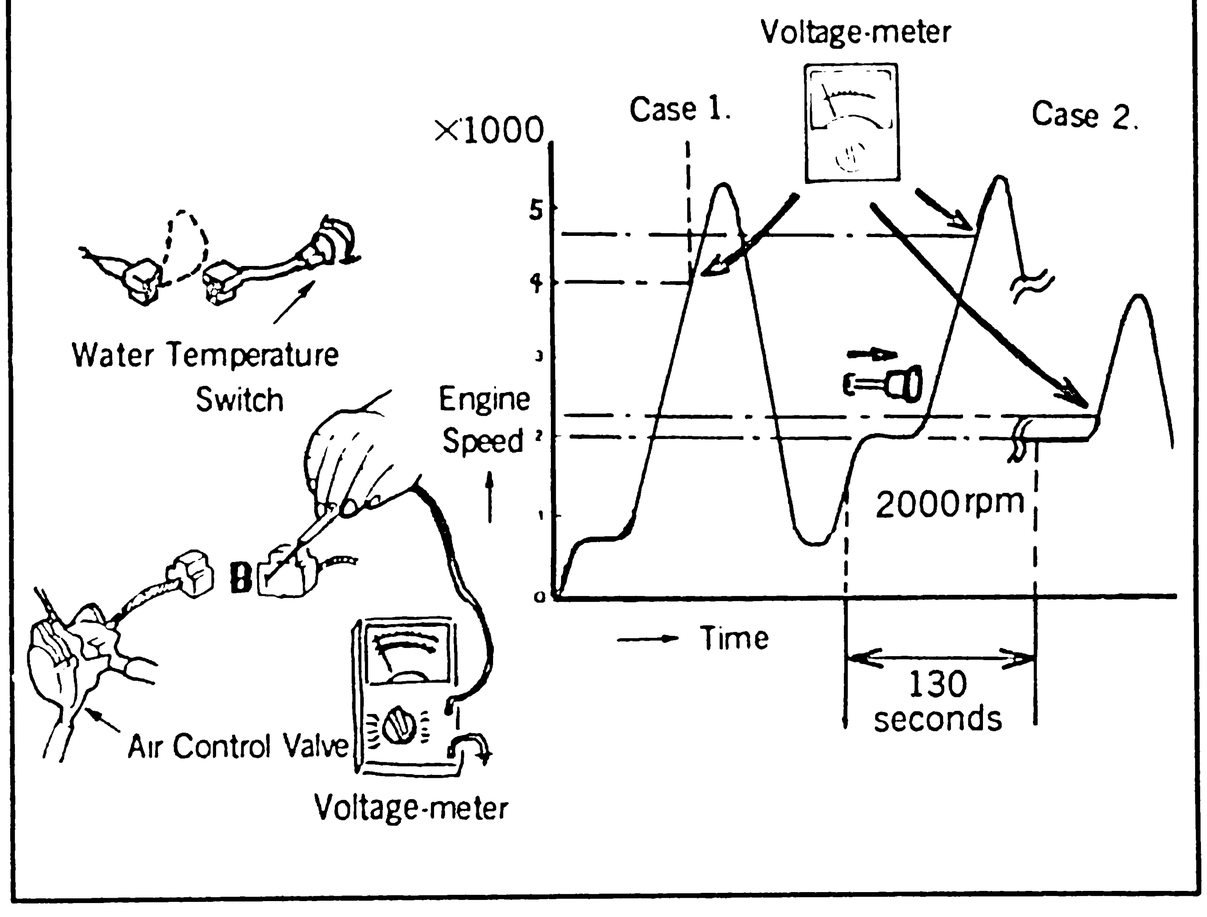

Fig. 4-38 "B" terminal (Wire harness)

IGNITION CONTROL SYSTEM

• CHECKING

FEDERAL (CANADA) CALIFORNIA | A/T M/T

CHECKING

a. Coil resistance (Leading side)

Federal and California specifications have the external resistance control system for leading coil.

The voltage of leading coil should increase one or two volts above 4000 rpm in engine hot condition.

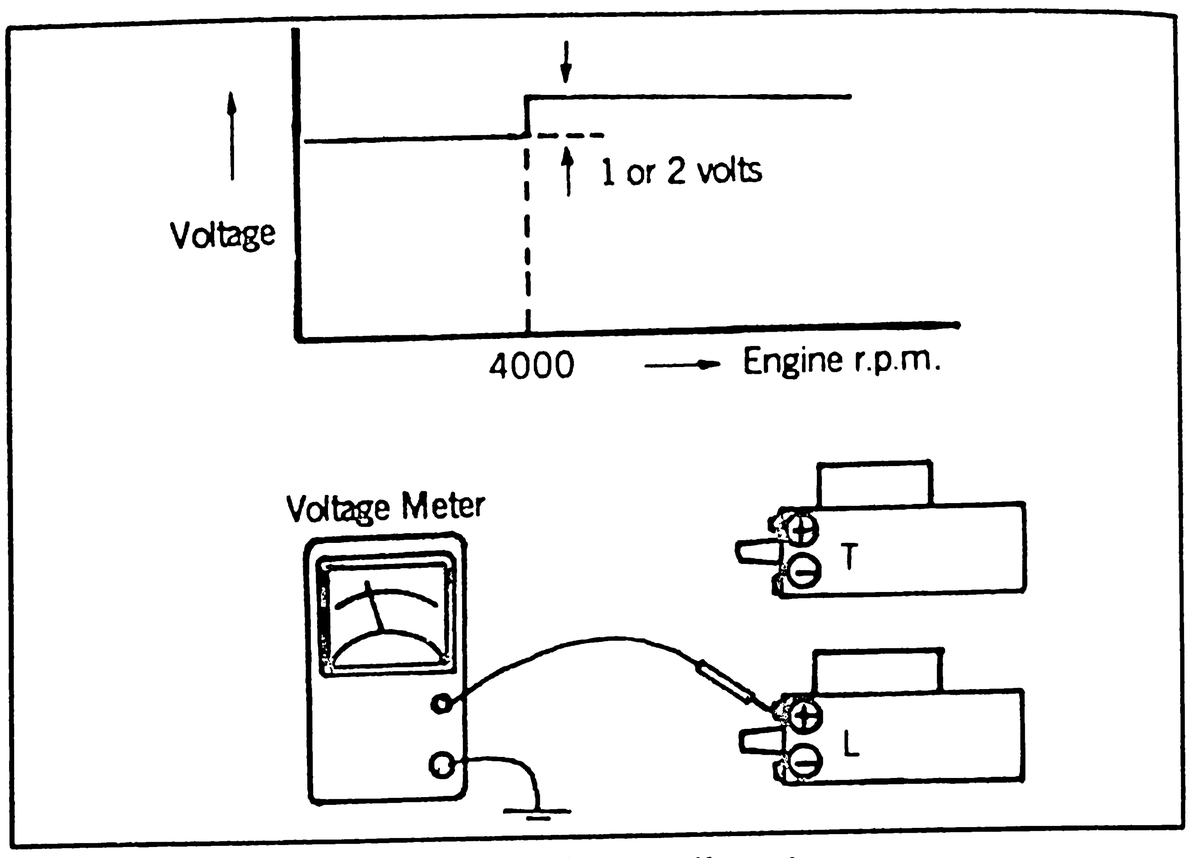

Fig. 4-39 Checking coil resistance

b. CALIFORNIA MODELS: Ignition control system

The ignition control system is controlled by the control unit. The function of control unit concerning with the ignition control system should be checked according to the following procedures.

NOTE: To check the ignition control system, idle switch and trailing ignition relay should be normal.

b-1. Trailing ignition control

Connect a timing light to the trailing side high tension cord.

Check the trailing igntion control according to the Fig. 4-40.

Case 1. The timing light goes ON at 2500± 200 rpm for A/T (3000± 300 rpm for M/T)

Case 2. The timing light goes on during deceleration.

Case 3. The timing light goes on at 1150±100 rpm.

Case 4. The timing light goes off at the engine speed range of 150±70 rpm higher than the speed inspected in case 3.

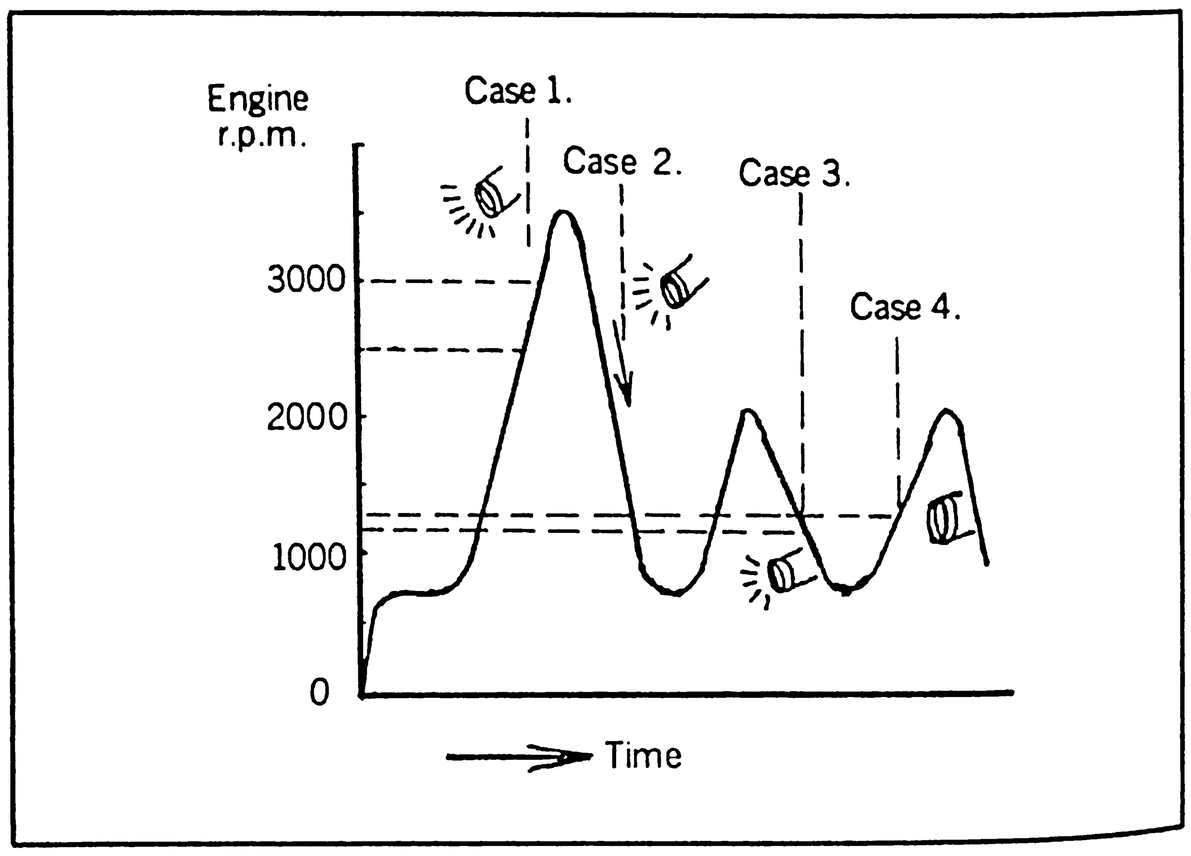

Fig. 4-40 Trailing ignition control

IGNITION CONTROL SYSTEM

o CHECKING

CALIFORNIA

A/T

M/T

b-2. Leading ignition control

Connect a timing light to the leading side high tension cord.

Check the leading ignition control according to the Fig. 4-41.

Case 1. Short-circuit the coupler of water temperature switch and adjust the engine speed to 2000 rpm by using the choke knob.

After 130 ± 26 seconds from engine starting, engine speed should increase by several hundred rpm.

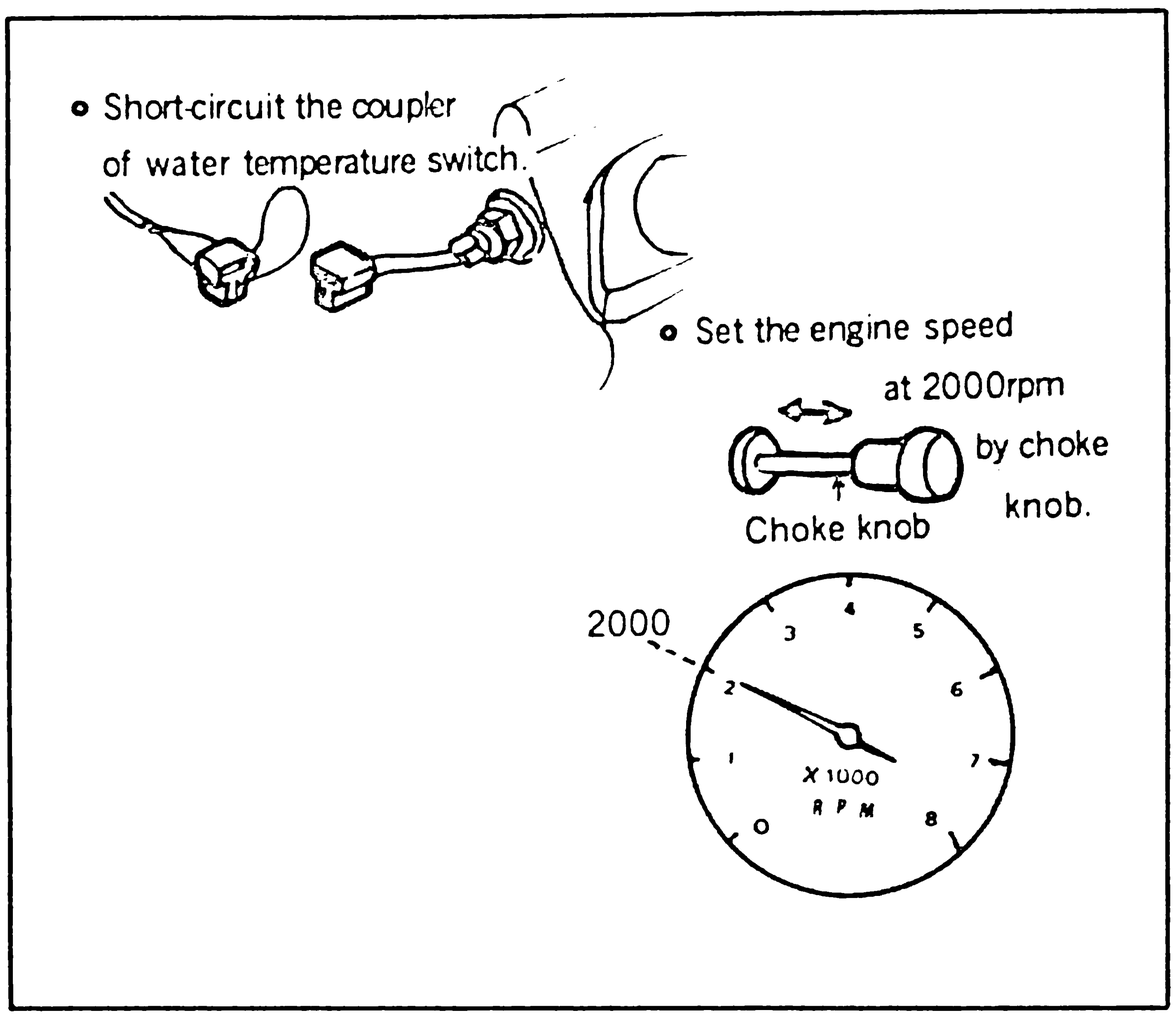

Fig. 4-41 Leading ignition control

DECELERATION CONTROL SYSTEM

• CHECKING

FEDERAL (CANADA) CALIFORNIA | A/T M/T

a. Deceleration control valve

Check following items according to Fig. 4-42.

Case 1. There should be no change in the idle speed when blinding the inlet hose.

Case 2. The air should be sucked respectively when the coupler A, B are individually disconnected at idling.

Case 3. An excessive air suction occurs at first time. (Anti-Afterburn Valve).
In case of the car with manual transmission, a small amount of air should be sucked thereafter until at about idling.
(Coasting Valve)

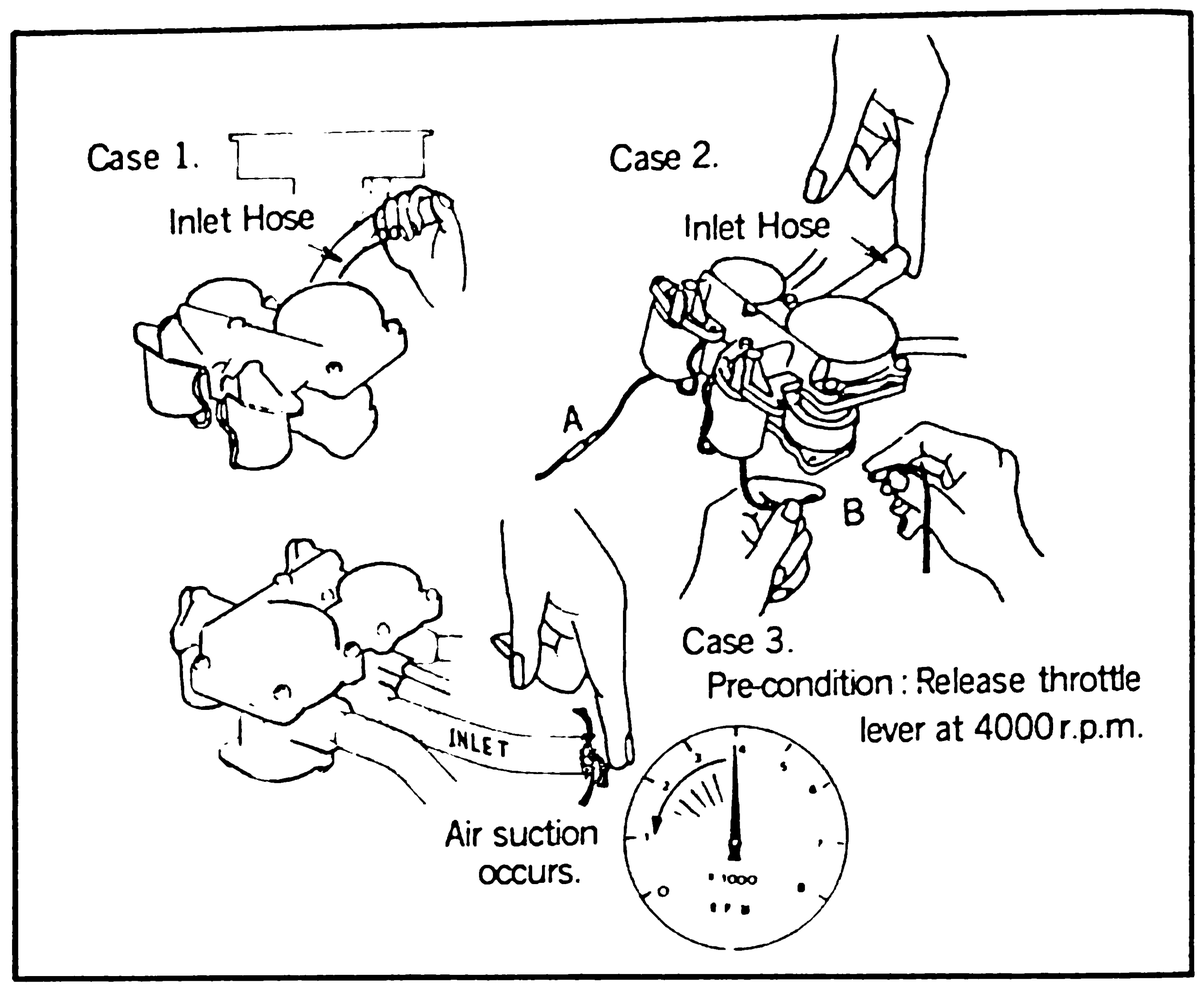

Fig. 4-42 Checking deceleration control valve

TROUBLE SYMPTON	POSSIBLE CAUSE	REPAIR
• After-burn	• Anti-afterburn valve does not work. • Coasting valve does not work.	• Check or replace
• Rough idling	• Air leaks from the deceleration control valve.	• Replace
• Poor engine brake	• Excessive air suction from anti-afterburn valve.	• Replace

FUEL ENRICHMENT SYSTEM

- CHECKING

FEDERAL (CANADA) CALIFORNIA | A/T M/T

CHECKING

1. RICHER (Only for manual transmission)

Short-circuit the idle switch and apply 12 volts to the coasting valve.
Check following items according to Fig. 4-43.

Case 1. The engine hunts when applying 12 volts to the richer.

Case 2. On the wire harness of the richer solenoid, there should be no current at idling but a current at 2,000 rpm.

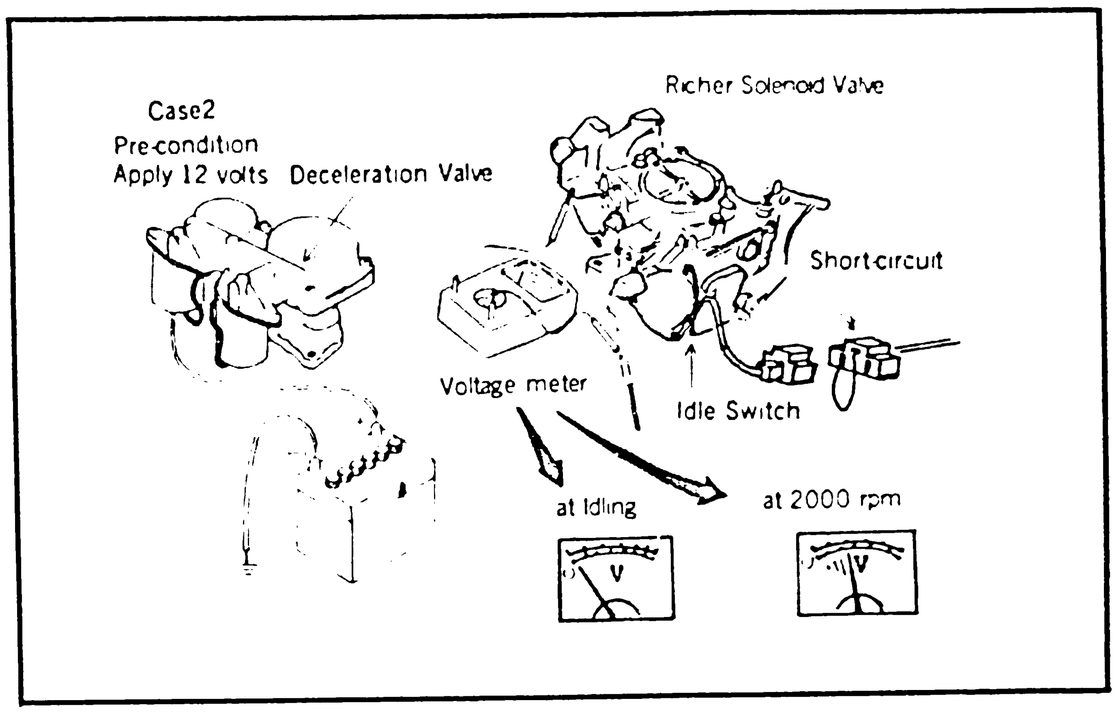

Fig. 4-43 Checking richer

2. POWER VALVE SOLENOID (except Federal M/T)

Apply 12 volts to the Ⓐ solenoid of the air control valve to cut the secondary air.
Check following item.

"CO" percentage changes when applying 12 volts to the power valve solenoid at 2,000 rpm.

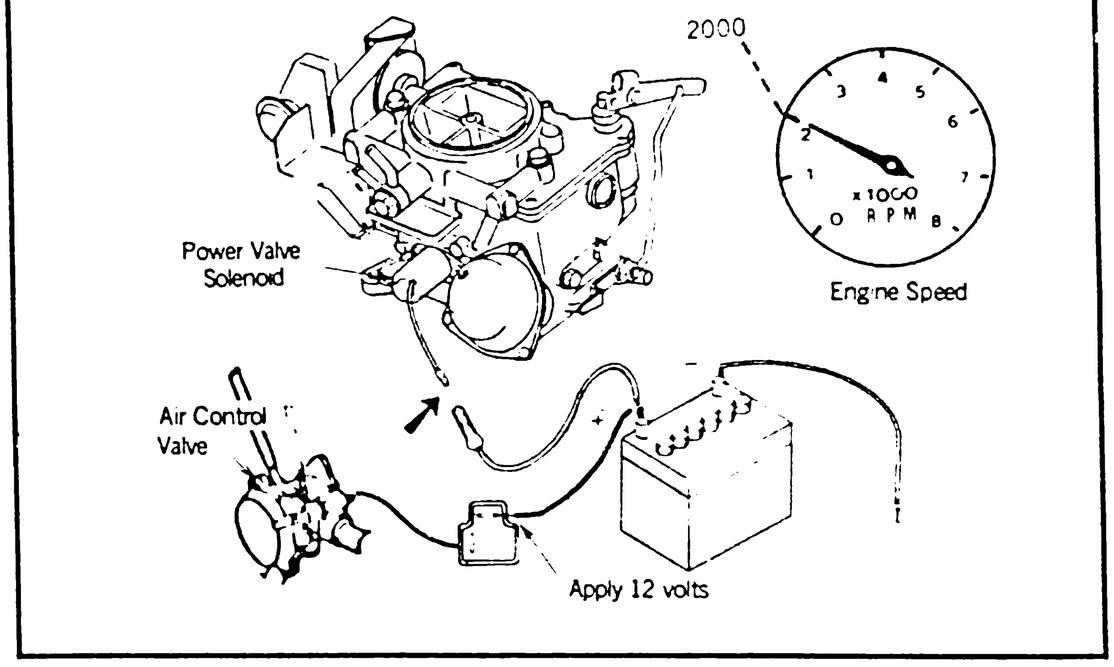

Fig. 4-44 Checking power valve solenoid

3. FUEL ENRICHMENT SYSTEM (except Federal Models)

The fuel enrichment system is controlled by the control unit. The function of the control unit concerning with the fuel enrichment should be checked according to the following procedures.

NOTE: The fuse (5 A) for the control unit should be normal.

Short-circuit the coupler of the water temperature switch and start the engine with the choke knob pulled.

Check to see that a current flows to the meter on the coupler of the power valve solenoid.

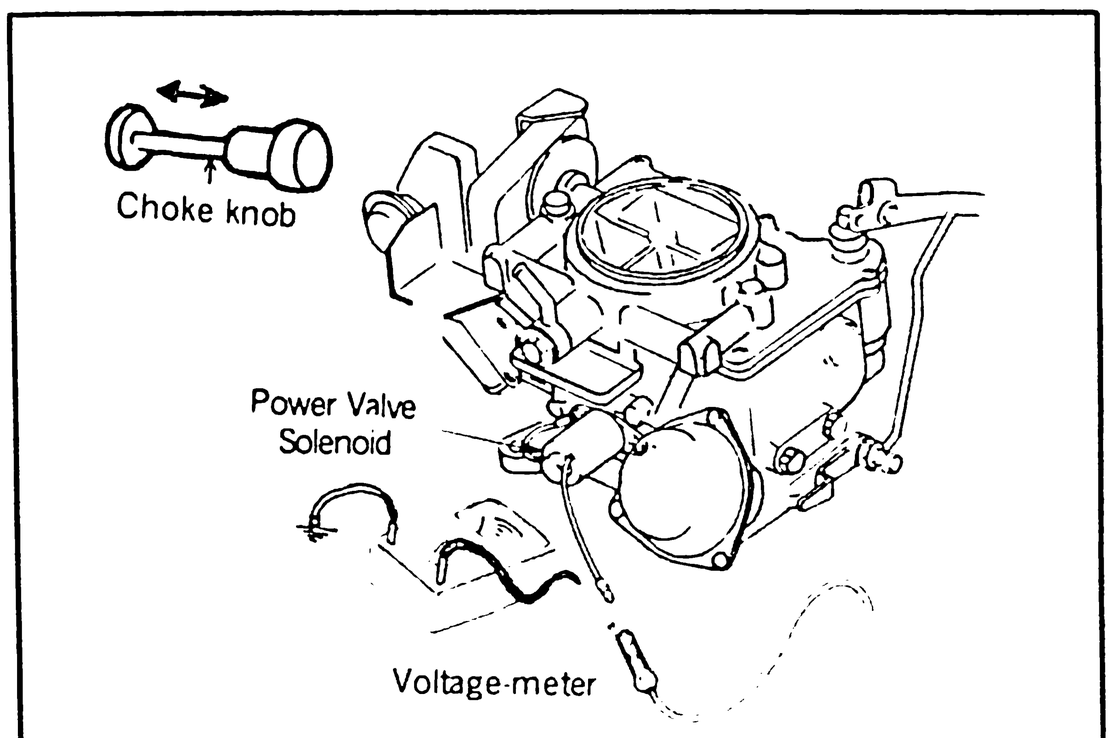

Fig. 4-45 Checking fuel enrichment system

FUEL ENRICHMENT SYSTEM

• CHECKING

FEDERAL (CANADA) CALIFORNIA

A/T M/T

CHECKING

TROUBLE SYMPTOM	POSSIBLE CAUSE	REPAIR
• Bucking • After-burn • Rough idle	• Richer does not operate during deceleration • Richer operates at idling	• Replace richer • Replace control unit • Replace idle switch
• Power shortage	• Power valve solenoid does not operate during EGR operation	• Replace solenoid • Replace control unit

IDLE COMPENSATION SYSTEM

o CHECKING

FEDERAL (CANADA) CALIFORNIA

A/T

M/T

CHECKING

a Idle compensator

Check following items.

Case 1. **There should be no air leakage for the idle compensator under the normal atomospheric temperature.**

Case 2. **If the idle compensator is warmed up more than 150°F, there should be an air flowing.**

Caution: To maintain the cleaner element or the idle compensator, take care not to bend the idle compensator.

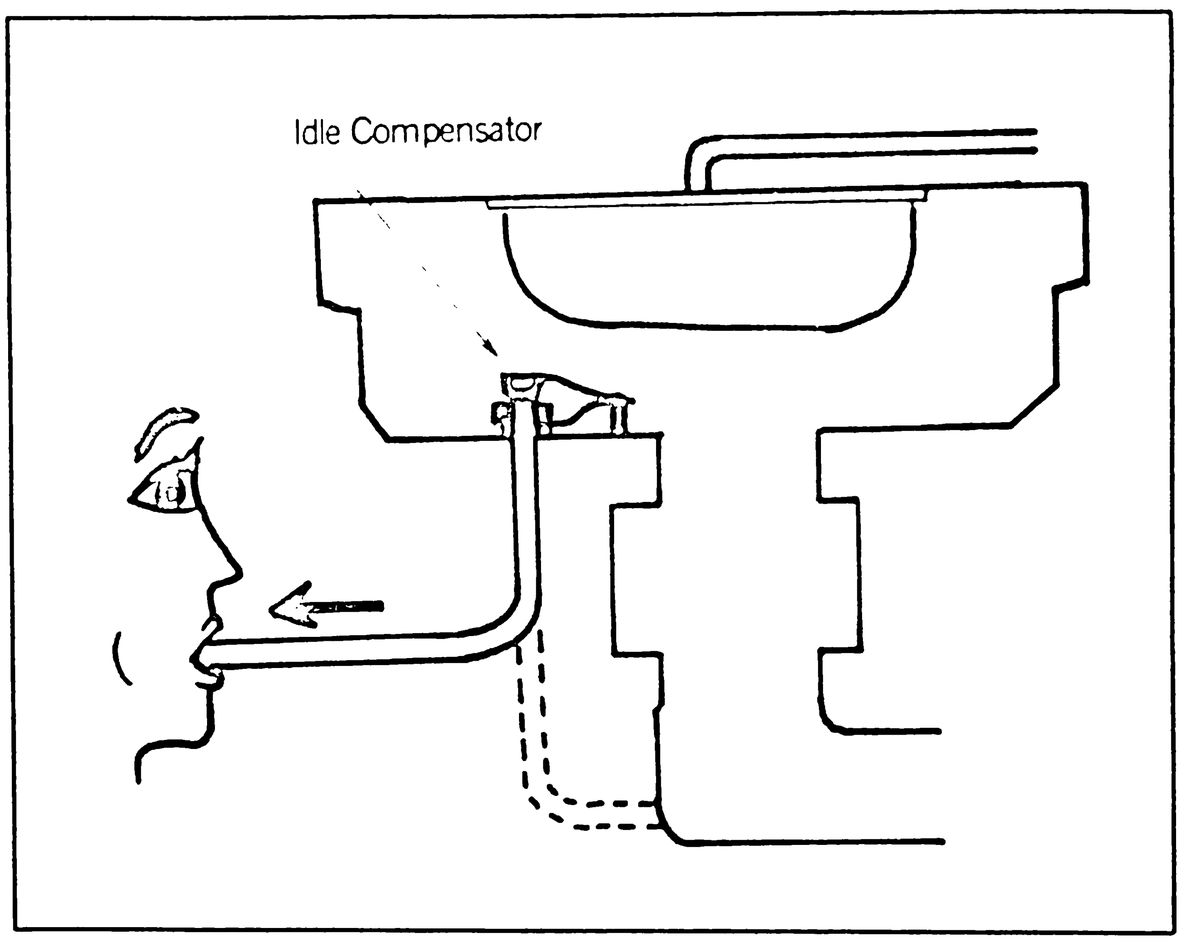

Fig. 4-46 Checking idle compensator

TROUBLE SYMPTON	POSSIBLE CAUSE	REPAIR
○ Rough idling	o Air leaks from the idle compensator	Replace idle compensator

b Throttle Opener

After checking the idle conditions without using the air conditioner, check following item.

Turn off the cooler switch.

The engine speed should rise up to 1200±50 rpm, when applying 12 volts to the solenoid valve.

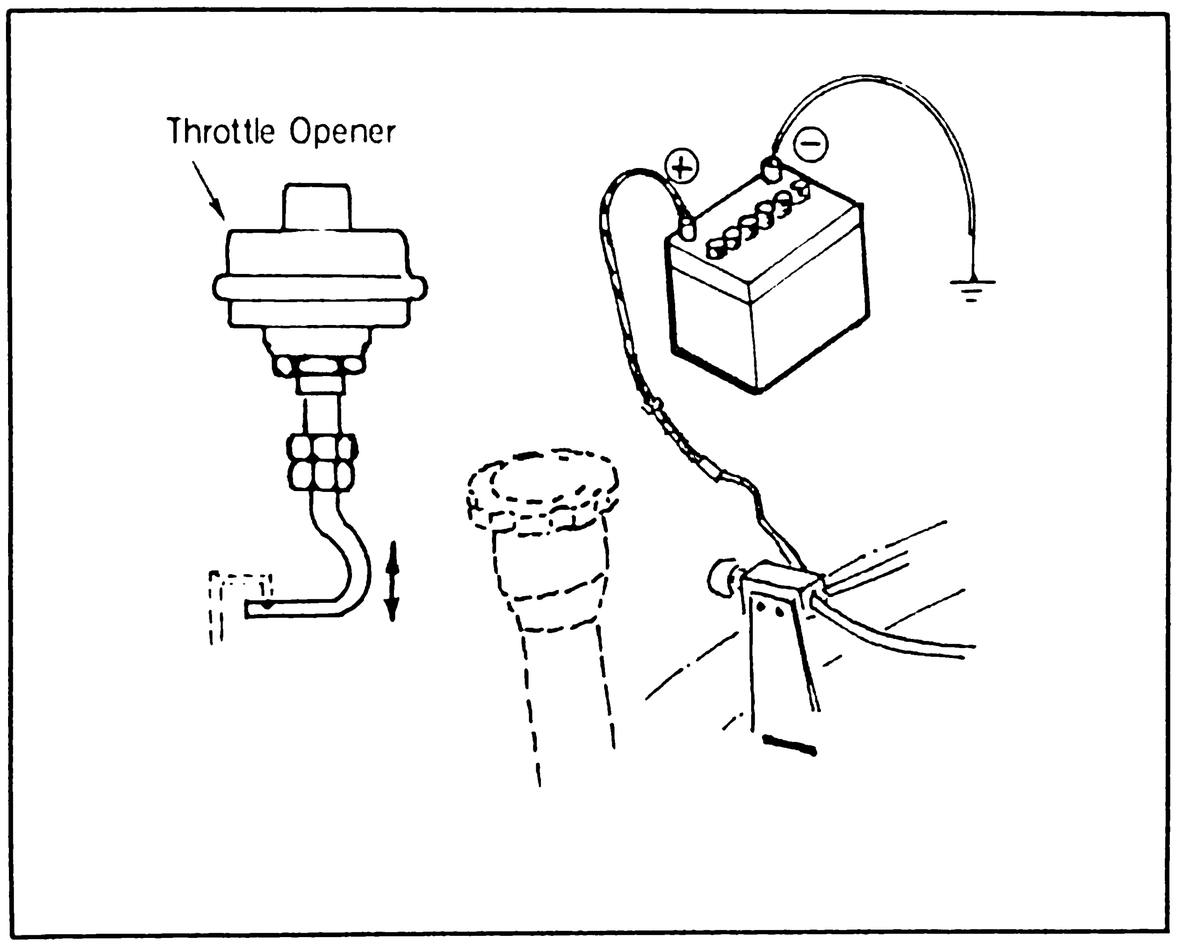

Fig. 4-47 Checking throttle opener

NEUTRAL GEAR POSITION

CRANKCASE EMISSION CONTROL SYSTEM

• CHECKING

FEDERAL (CANADA) CALIFORNIA

A/T M/T

CHECKING

a. **Ventilation valve**

Disconnect the evaporative line from the ventilation valve and run the engine at the idling speed.

The engine speed should decrease when blocking the inlet pipe of the ventilation valve.

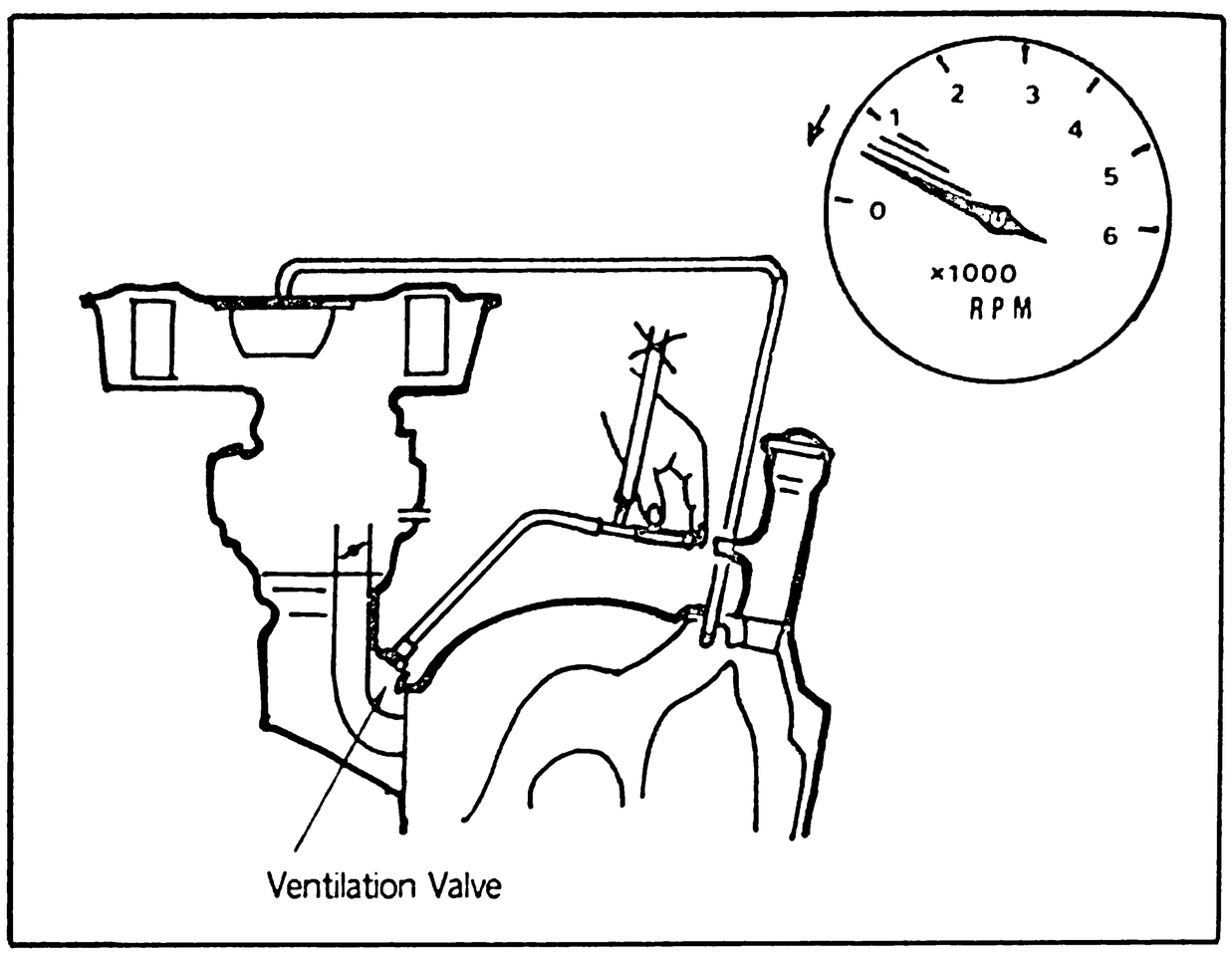

Fig. 4-48 Checking ventilation valve

CHECKING

a. **Evap. check and cut valve**

Take off the evap. check and cut valve from the vehicle and check following items.

Case 1. **The valve operates with the pressure of more than 0.04 kg/cm² (0.57 lb/in²).**

Case 2. **The valve operates with the pressure of more than 0.01 kg/cm² (0.14 lb/in²).**

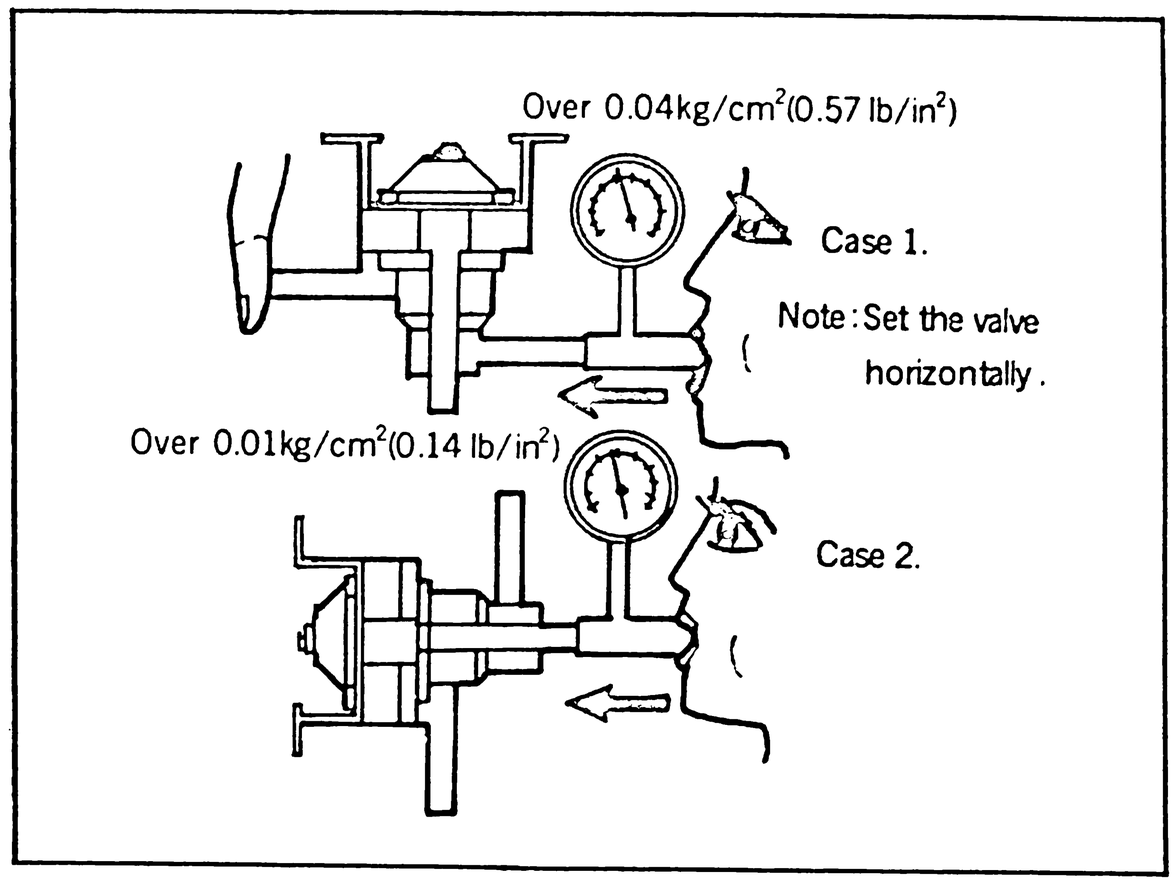

Fig. 4-49 Checking evap. valve

b. **Air vent valve**

Check following item.

Make sure that the air vent solenoid clicking sounds when the ignition switch turns on or off.

TROUBLE SYMPTOM	POSSIBLE CAUSE	REPAIR
• Rough idling	• Air vent valve opens during engine operation. • Disconnected hoses	• Air vent solenoid

HEAT HAZARD PROTECTIVE AND WARNING SYSTEM

• CHECKING

FEDERAL (CANADA) CALIFORNIA | A/T M/T

CHECKING

a. **Heat hazard warning system**

Short-circuit the coupler of heat hazard sensor and check following items.

Case 1 **The warning lamp glows at idling**

Case 2 **The air flows out from cooling air pipe at 2,000 rpm.**

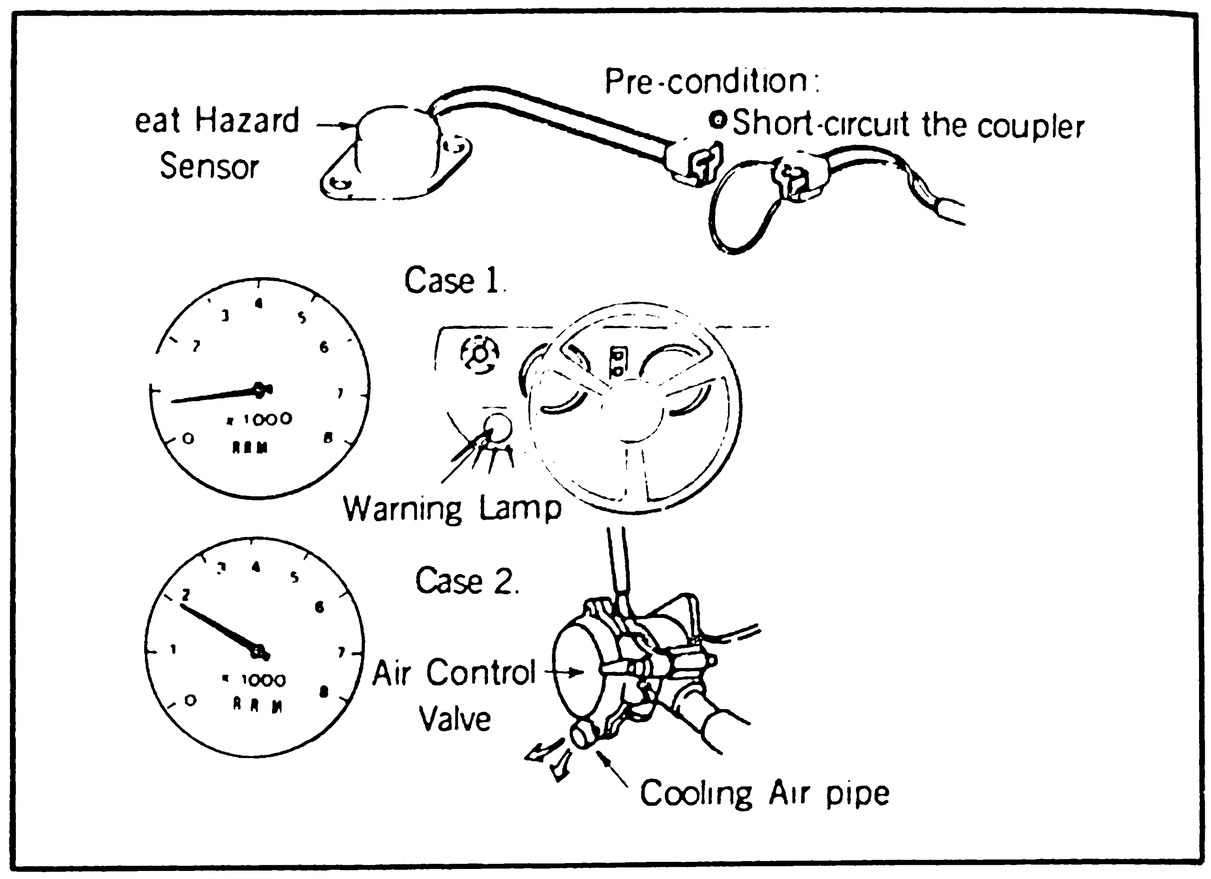

Fig. 4-50 Checking heat hazard system

AUTOMATIC THROTTLE RELEASE SYSTEM

• CHECKING

CALIFORNIA

A/T

M/T

CHECKING

Check the automatic throttle release system according to following procedures.

Case 1. Start the engine and set the engine speed at 2000 rpm by choke knob.

Make sure that the choke knob returns automatically when the water temperature increase to the point shown in Fig. 4-51.

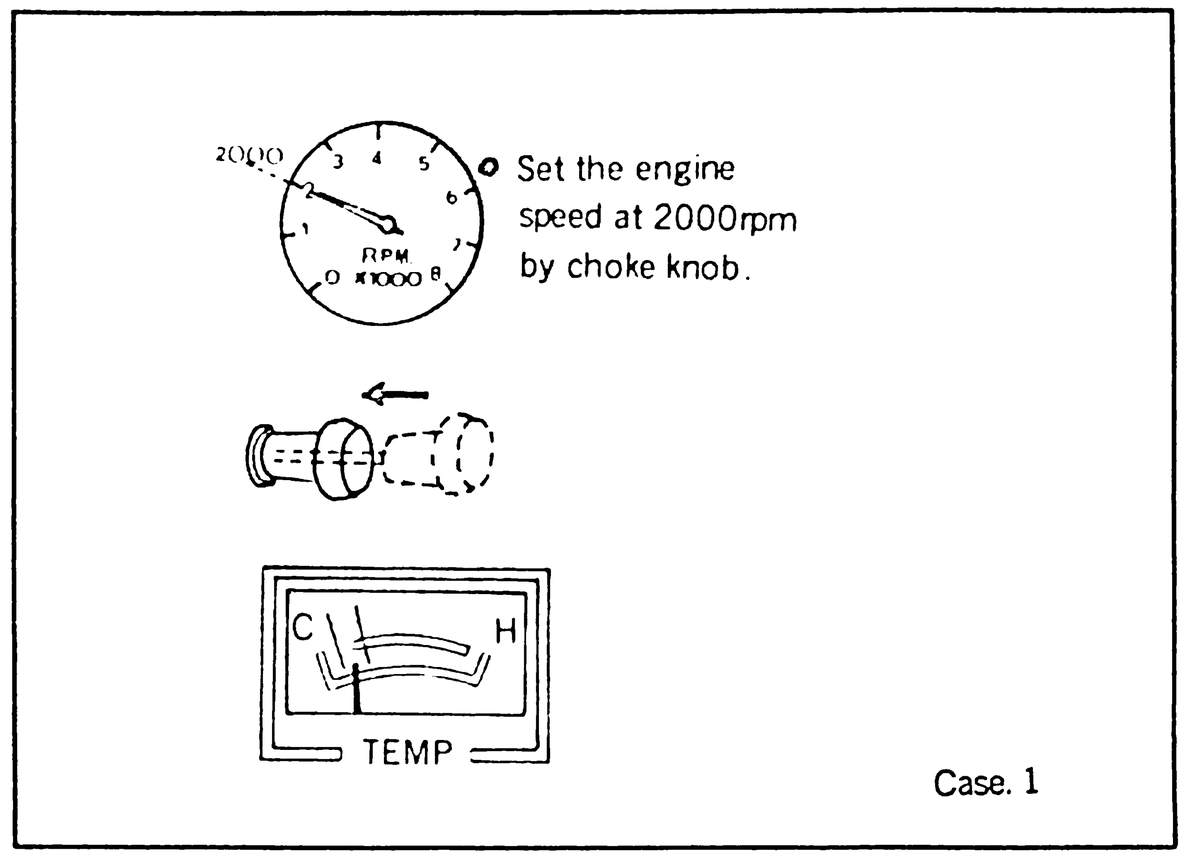

Fig. 4-51 Checking throttle release system

Case 2. Connect a voltage-meter to the coupler of vacuum switch as shown in Fig. 4-52.

After starting the engine, make sure that a current flows to the meter for 20~60 seconds.

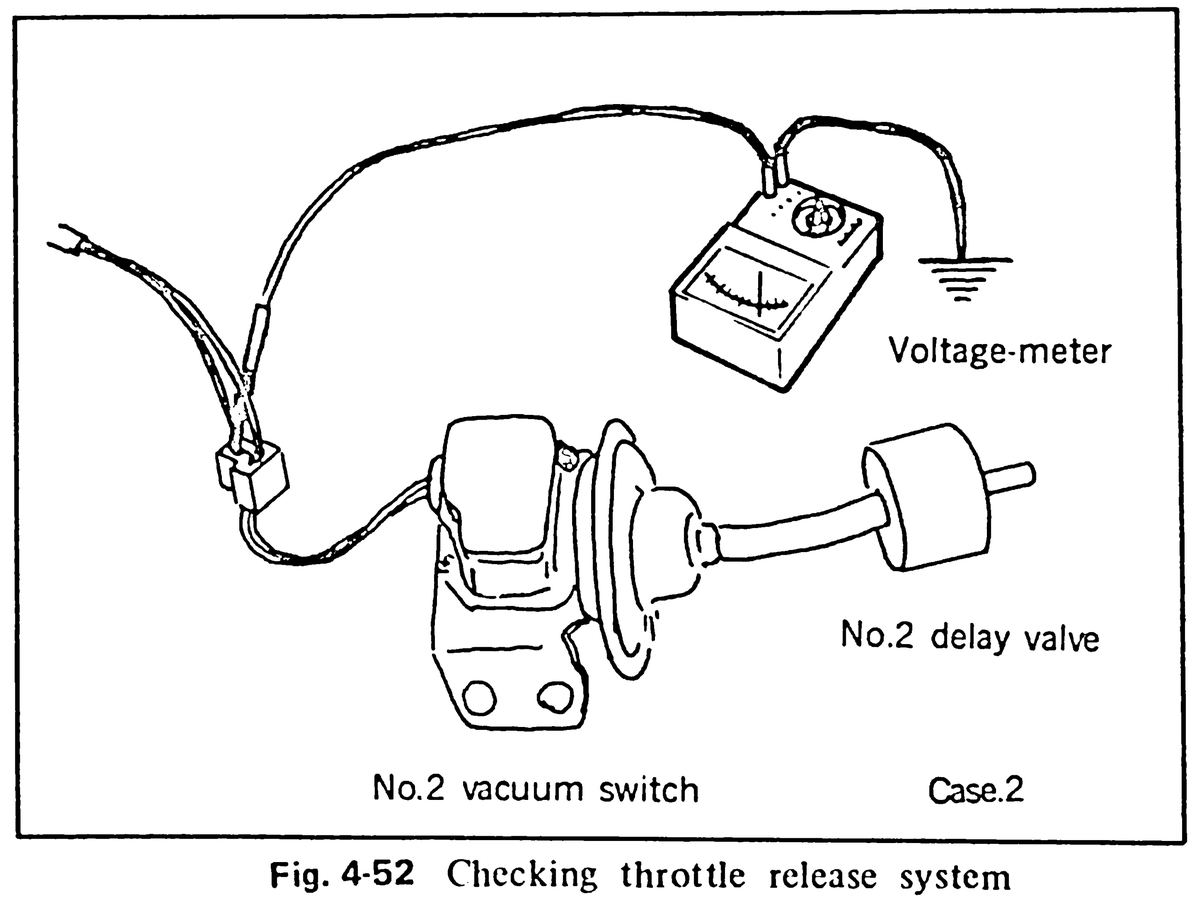

Fig. 4-52 Checking throttle release system

E.G.R. CONTROL SYSTEM

• CHECKING

FEDERAL
CALIFORNIA

A/T

CHECKING

a. No. 1 vacuum switch and No. 1 delay valve

Connect a voltage meter to the vacuum switch.
Disconnect the coupler of EGR solenoid.
Check following item.

After starting the engine, hold the speed up to 3500 rpm and then release the throttle valve.

The electric current activates to a meter for 3~25 seconds after decreasing the engine speed to the idling.

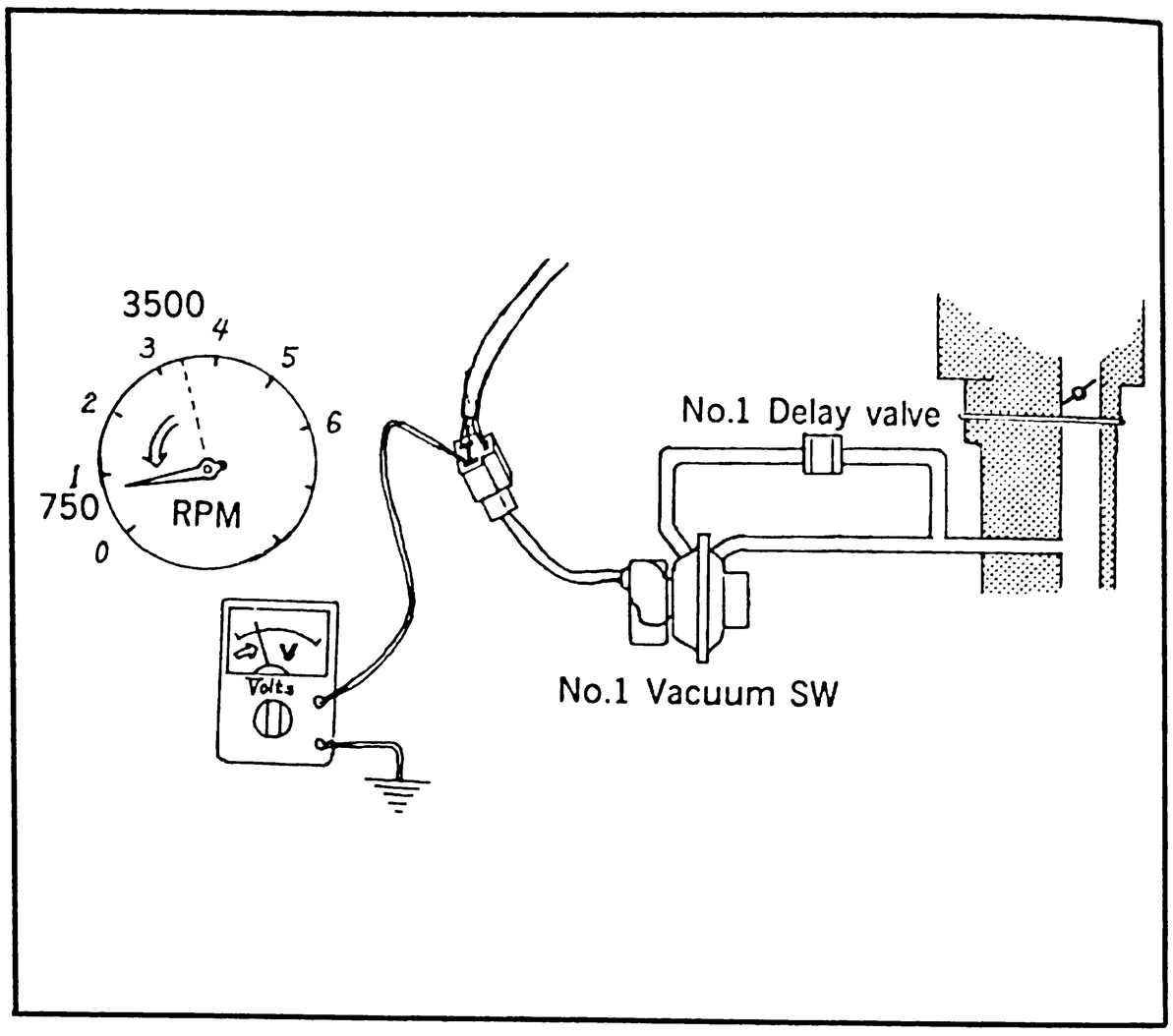

Fig. 4-53 Checking vacuum switch

b. EGR Valve

Apply manifold vacuum to the EGR solenoid and check following item.

When applying 12 volts to the EGR solenoid the engine should stall by the excessive exhaust gas.

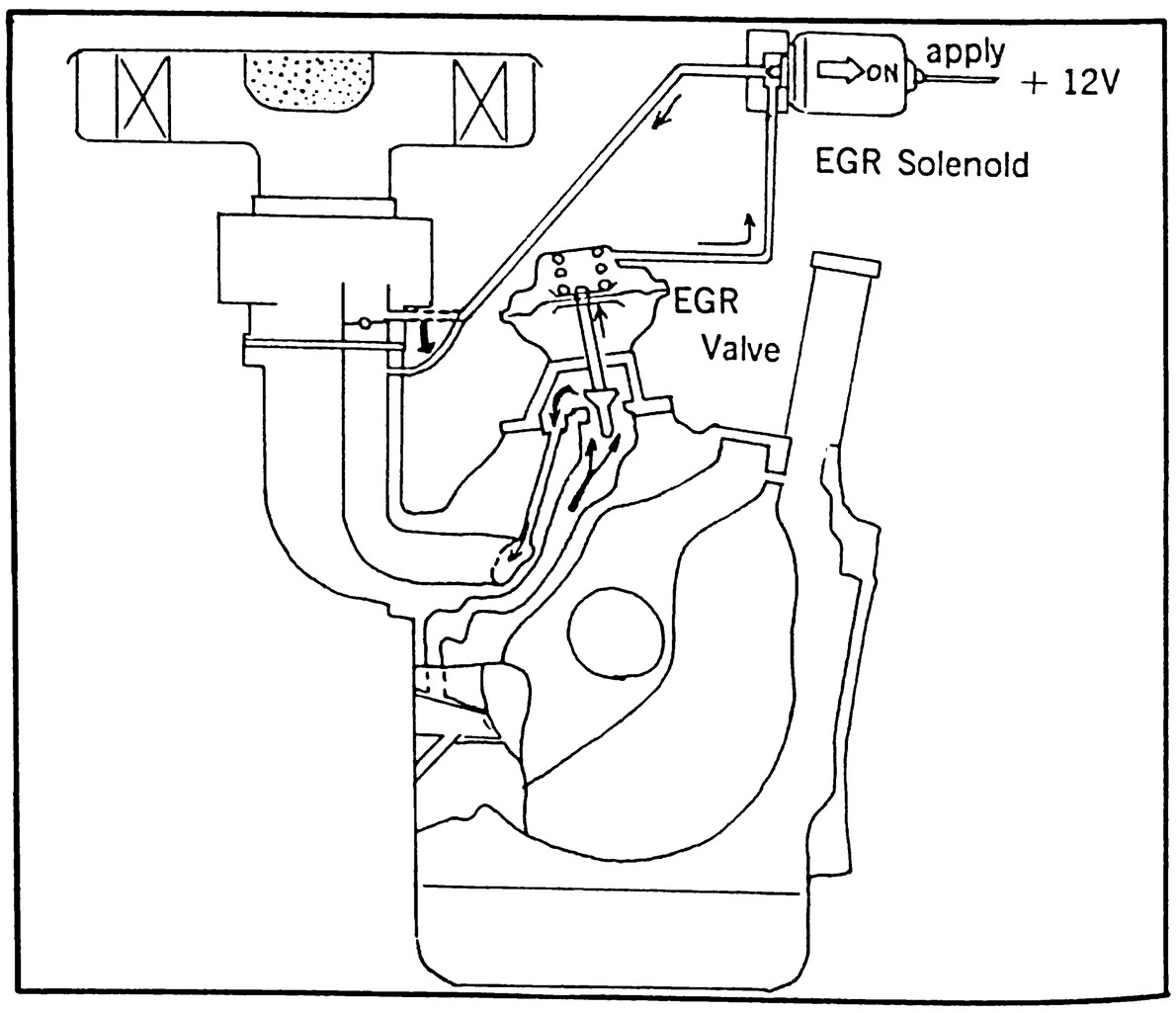

Fig. 4-54 Checking EGR valve

TROUBLE SYMPTOM	POSSIBLE CAUSE	REPAIR
• Rough idling	• Exhaust gas leaks from EGR valve	• Clean or replace EGR valve

BODY AND CHASSIS

808(1300)

808(1600)

RX-4

Cosmo

BODY AND CHASSIS

KEY CHANGE

CALIFORNIA · FEDERAL

808 (1300)

KEY CHANGE

- The following items have been changed.

ITEM	REF. PAGE
TRANSMISSION	
• MANUAL TRANSMISSION GEAR RATIO	5 – 2
REAR AXLE	
• DIFFERENTIAL GEAR	5 – 3
BRAKE	
• DIFFERENTIAL PROPORTIONING VALVE	5 – 4 ~ 5
• BRAKE FLUID LEVEL SENSOR	5 – 4 , 5 – 6

MANUAL TRANSMISSION

CALIFORNIA · FEDERAL · CANADA

DESCRIPTION

808 (1300)

DESCRIPTION

- Transmission gear ratio has been changed as follows.

Transmission gear ratio

	'77 model	'76 model
First	3.655	3.337
Second	2.185	1.995
Third	1.425	1.301
Fourth	1.000	1.000
Reverse	3.655	3.337

DIFFERENTIAL GEAR

CALIFORNIA · FEDERAL · CANADA

DESCRIPTION

808 (1300)

DESCRIPTION

- Final gear ratio has been changed to improve the fuel consumption.
- Speedometer gear ratio has been also changed.

Gear ratio

	Final gear ratio		Speedometer gear ratio	
	'77 model	'76 model	'77 model	'76 model
Manual transmission	3.727 (41/11)	4.1 (41/10)	3.285 (23/7)	3.6 (18/5)
Automatic transmission	——	——	——	——

- To increase the strength of the differential carrier and decrease the total weight, the differential carrier (dimension A) and drive pinion (dimension B) have been shortened 60 mm (2.36 in) and a long collar has been discarded. (Propeller shaft has been extended 60 mm (2.36 in).)

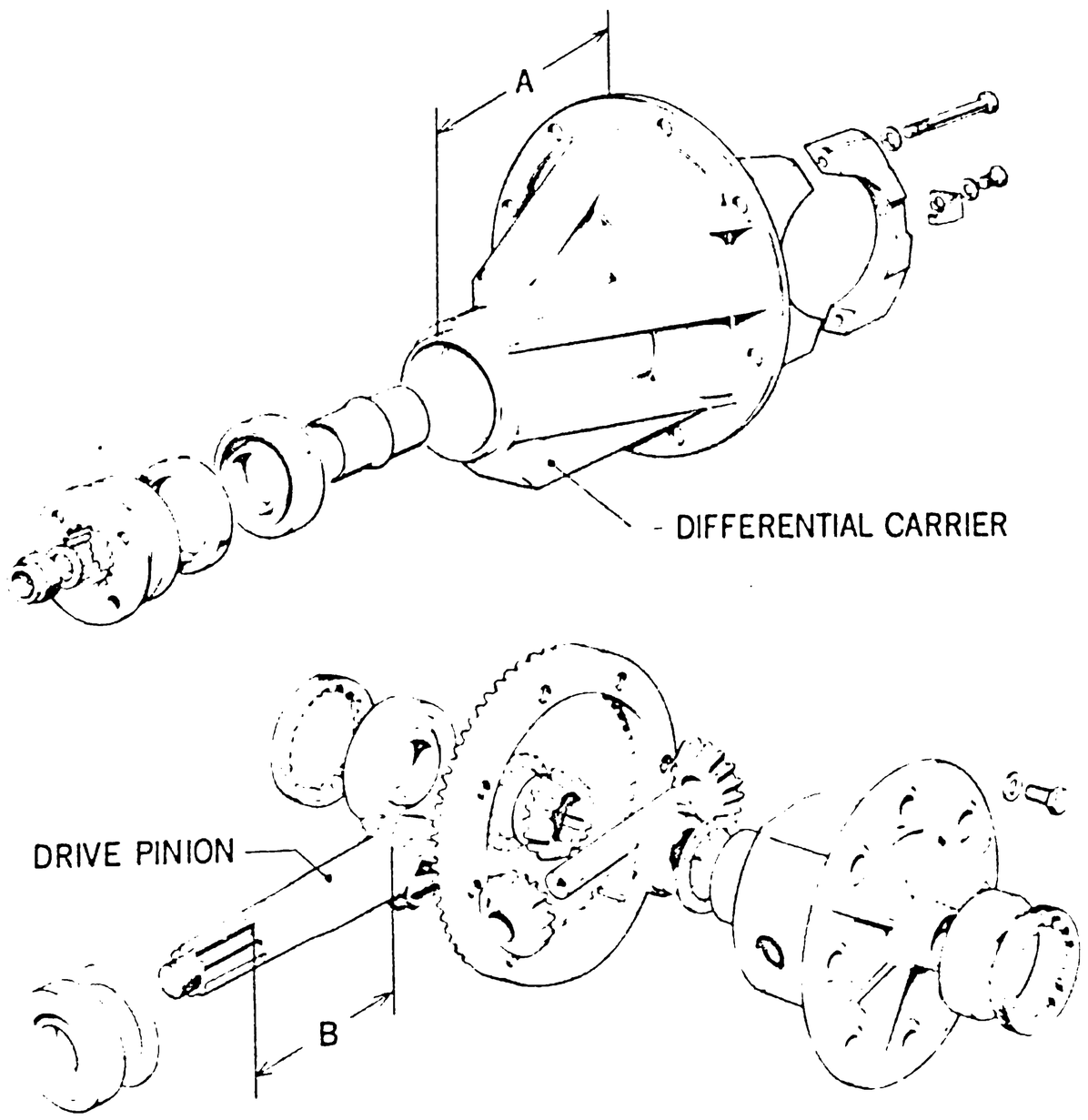

Fig. 5-1 Differential gear

BRAKE SYSTEM

CALIFORNIA · FEDERAL

DESCRIPTION

808 (1300) · 808 (1600)

DESCRIPTION

- DIFFERENTIAL PROPORTIONING VALVE has been changed to the new type without the fail indicator switch.

- BRAKE FLUID LEVEL SENSOR has taken place of the fail indicator switch.
  The sensor has been installed in the reservoir tank.

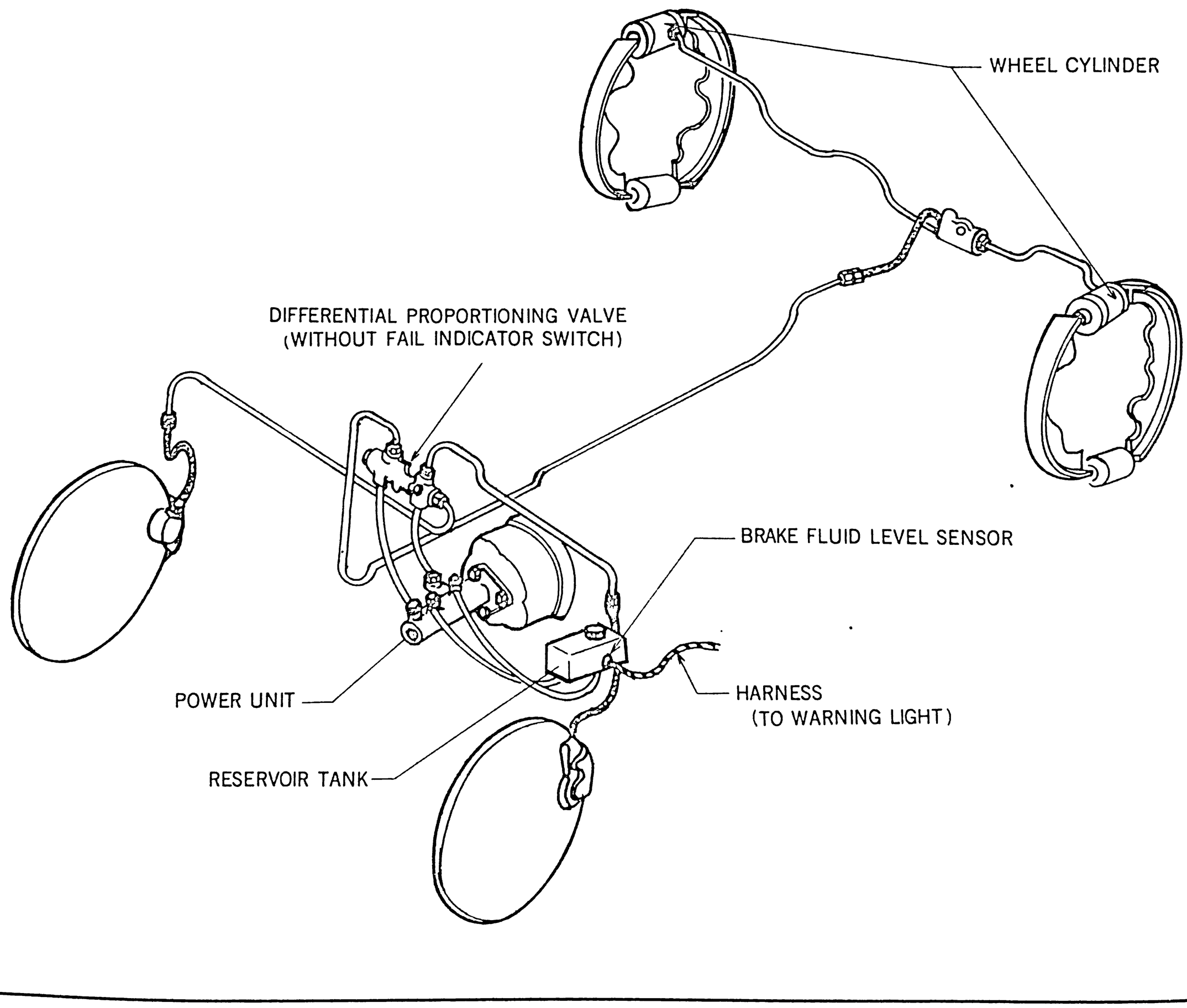

Fig. 5-2 Brake system

DIFFERENTIAL PROPORTIONING VALVE

DESCRIPTION

CALIFORNIA · FEDERAL

808 (1300) · 808 (1600)

DESCRIPTION

- The function of new differential proportioning valve is similar to the old one except the fail indicator mechanism.
- This valve controls the fluid pressure to the rear brake line and prevents the locking up of the rear wheels before the front wheels in case of the panic stop.

OPERATION

- The operation of this valve is divided into three as following according to the fluid pressure from the master cylinder.

A) When the fluid pressure is less than the specified value;
The fluid pressure is applied directly to the rear wheels.

B) When the fluid pressure is more than the specified value;
The decreased fluid pressure is applied to the rear wheels. (the fluid pressure is controlled.)

C) When the front brake line fails;
The fluid pressure is applied directly to the rear wheels.

Specified pressure

COUPE SEDAN	30 kg/cm² (426.6 lb/in²)
WAGON	40 kg/cm² (568.8 lb/in²)

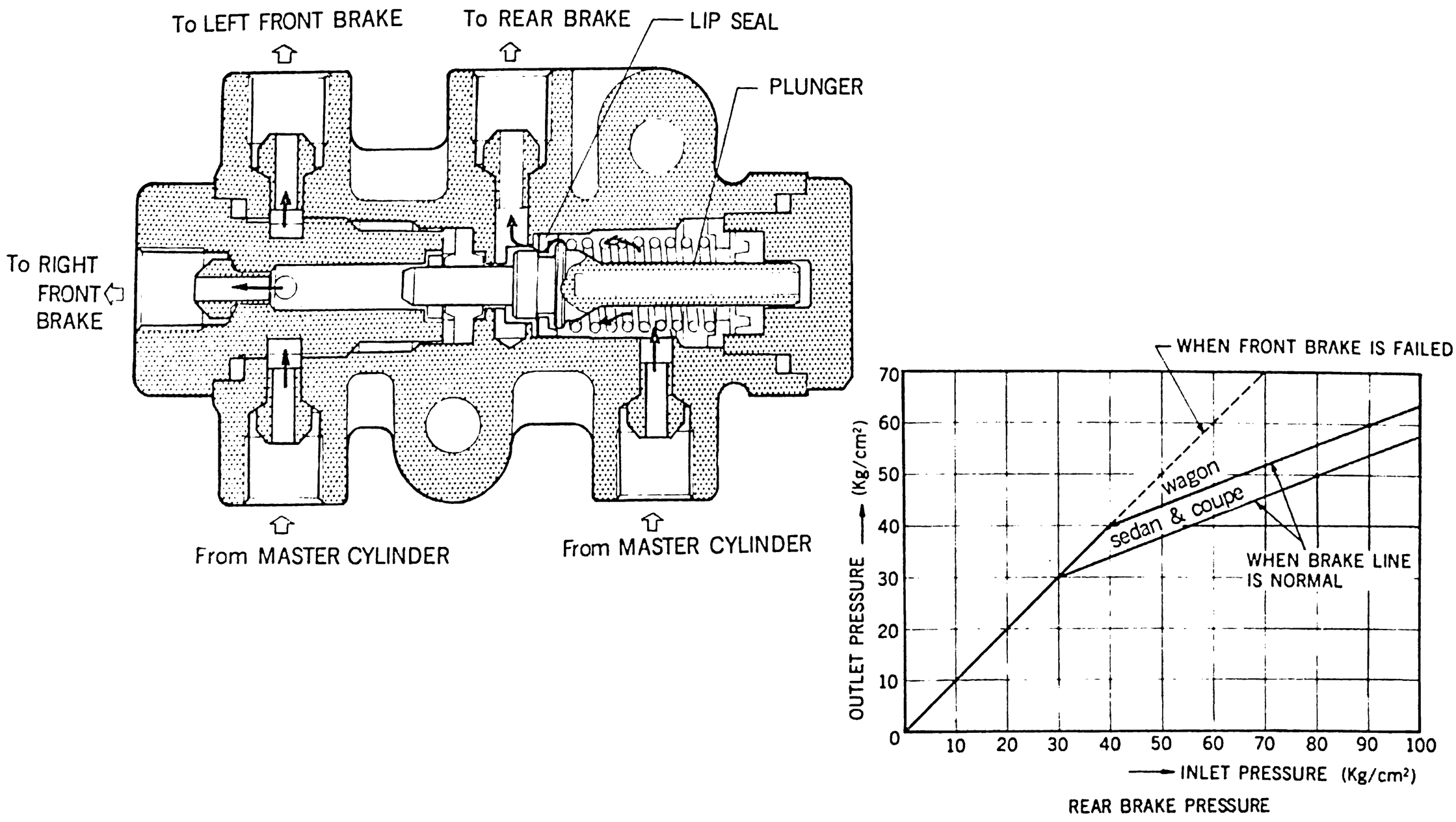

Fig. 5-3 Differential proportioning valve

BRAKE FLUID LEVEL SENSOR

CALIFORNIA · FEDERAL

DESCRIPTION · CHECKING

808 (1300) · 808 (1600)

DESCRIPTION

- Brake fluid level sensor senses the fluid level in the reservoir tank and if the fluid level is lower than specified, the warning light will illuminate to warn necessity of the brake fluid.

- The warning light is common with the parking brake warning light.

- This sensor consists of a reed switch, a float and a magnet as shown in Fig. 5-4.

- The reed switch is actuated by the magnetic force. It is turned on when the float moves downward nearly the reed switch and the warning light illuminates.

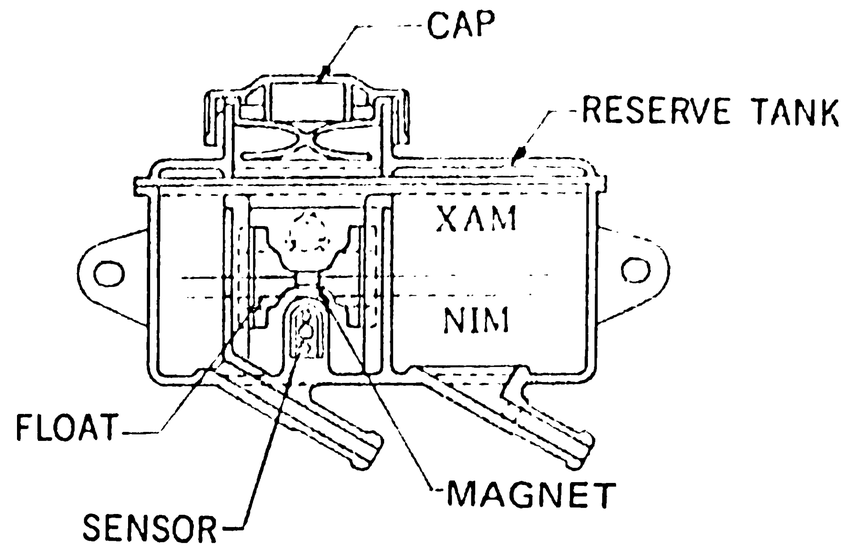

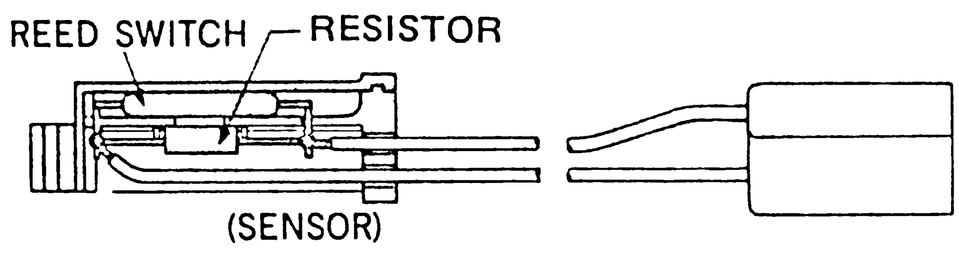

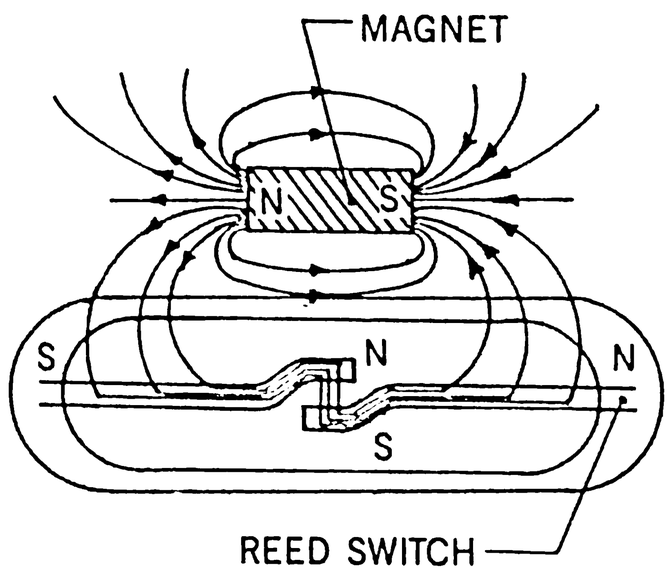

Fig. 5-4 Brake fluid level sensor (Reed switch)

CHECKING

- Check the brake fluid level sensor as follows.

1. Disconnect the coupler for the sensor.

2. Connect the circuit tester to the coupler and check the continuity by moving the float up and down as shown in Fig. 5-5.
   When the float is below the "MIN" mark, the tester should show the continuity, however, the tester should not show the continuity when the float is above the "MIN" mark.

3. If the trouble is found, replace the sensor.

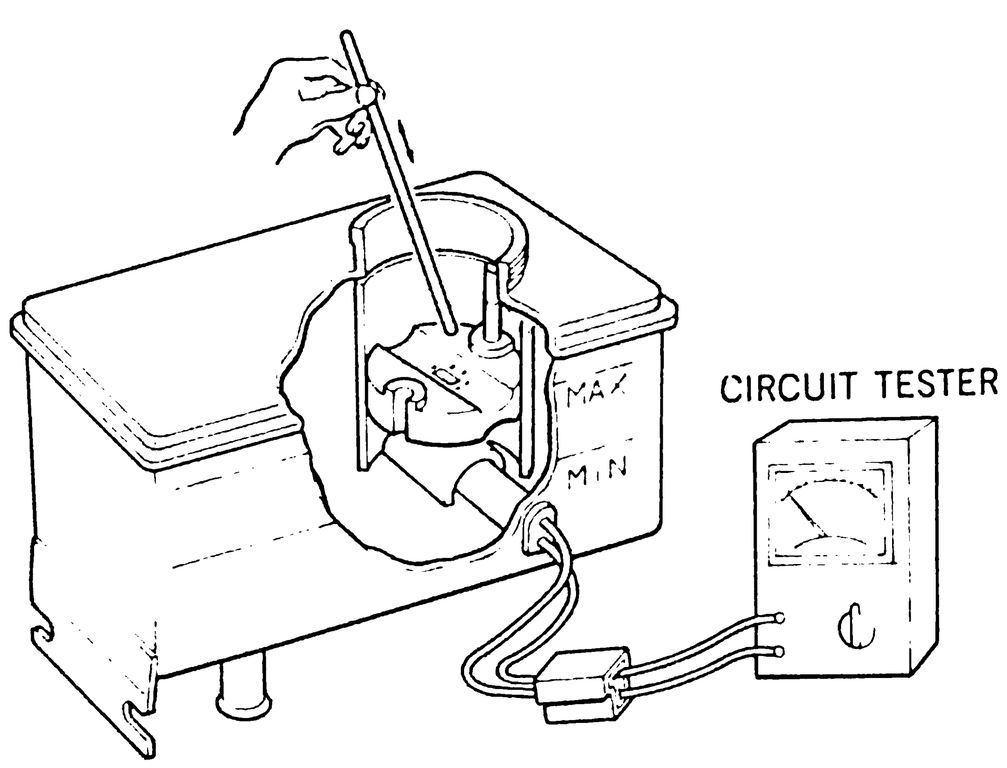

Fig. 5-5 Checking the brake fluid level sensor

BODY AND CHASSIS	CANADA
KEY CHANGE	808 (1300)

KEY CHANGE

- The following items have been changed.

ITEM	REF. PAGE
TRANSMISSION • MANUAL TRANSMISSION GEAR RATIO	5 – 2
REAR AXLE • DIFFERENTIAL GEAR	5 – 3

KEY CHANGE

- The following items have been changed.

ITEM	REF. PAGE
TRANSMISSION • FIVE SPEED MANUAL TRANSMISSION	5 – 10 ~ 14
REAR AXLE • DIFFERENTIAL GEAR	5 – 15
BRAKE • DIFFERENTIAL PROPORTIONING VALVE • BRAKE FLUID LEVEL SENSOR	5 – 4 ~ 5 5 – 4, 5 – 6

DESCRIPTION

- Five speed manual transmission has been newly equipped.

Gear ratio

First	3.380
Second	2.002
Third	1.390
Fourth	1.006
Fifth	0.841
Reverse	3.389

Oil capacity

1.7 ℓ (1.8 U.S. quarts)
[Canada : 1.5 ℓ (1.6 U.S. quarts)]

Lubricant

Above −18°C (0°F)	GL–4 SAE90
Below −18°C (0°F)	GL–4 SAE80

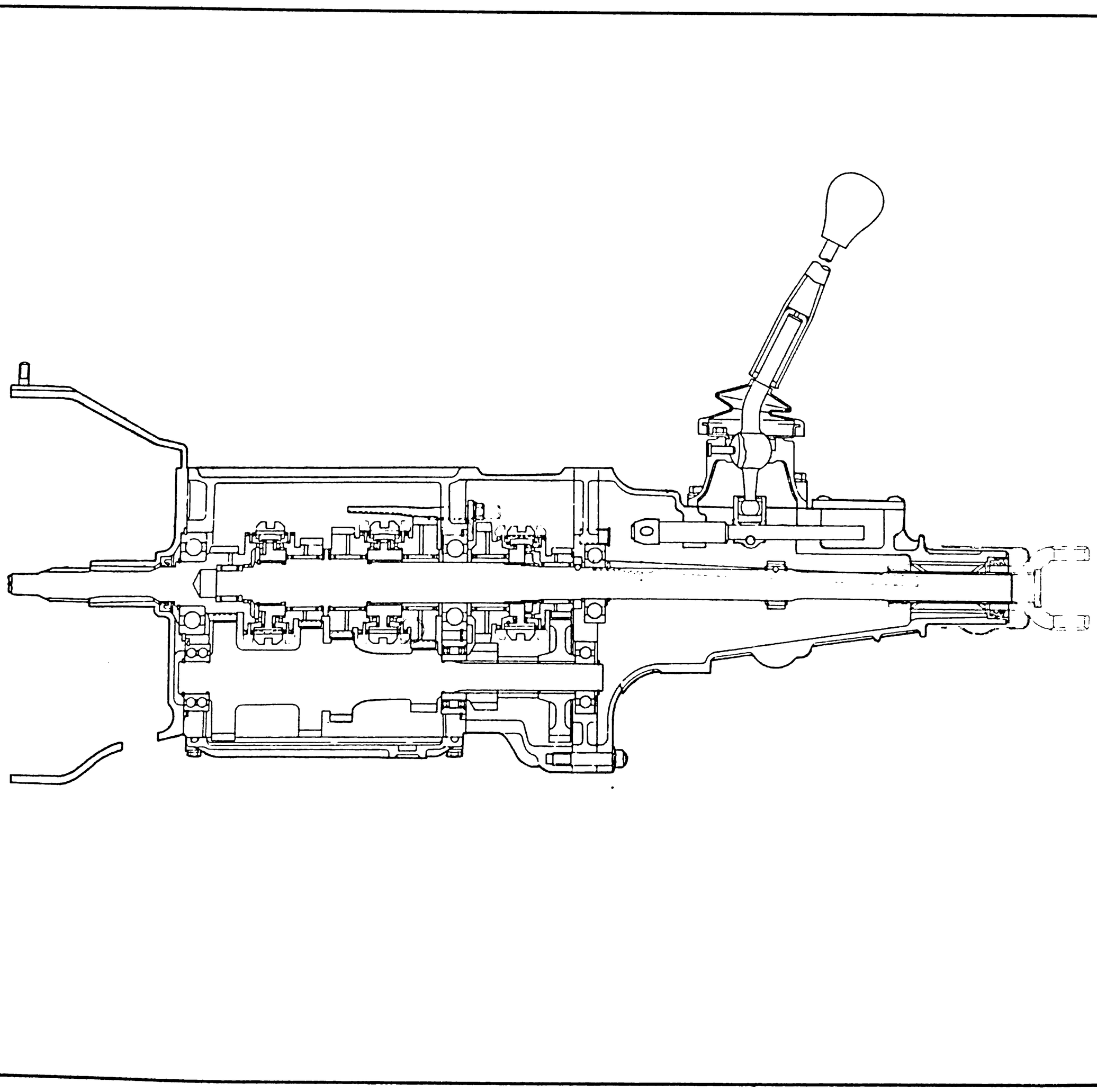

Fig. 5-6 Five speed manual transmission

DESCRIPTION (CONT.)

- All the forward gears are constantmesh type with synchronizers as in the previous models and reverse gear is constantmesh type without the synchronizers as shown in Fig. 5-7.

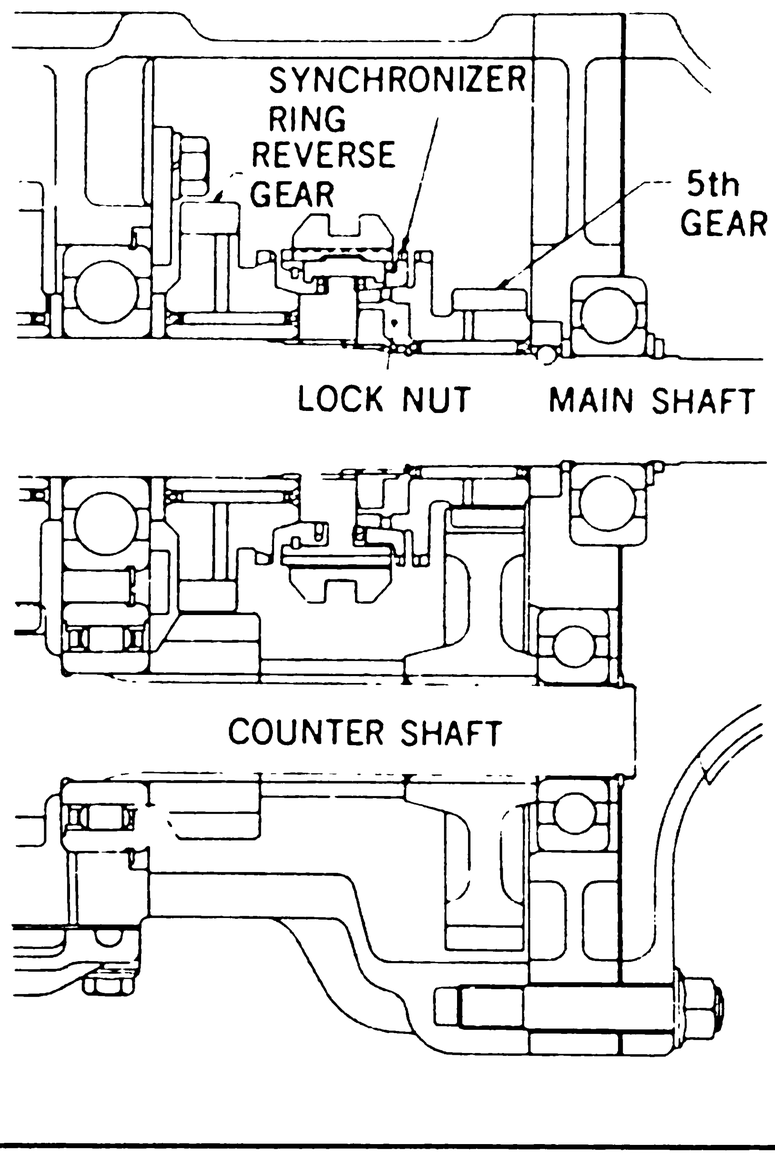

Fig. 5-7 Five speed manual transmission

- The shifting pattern is as shown in Fig. 5-8.

- The select lock spindle is the two step type as shown in Fig. 5-9

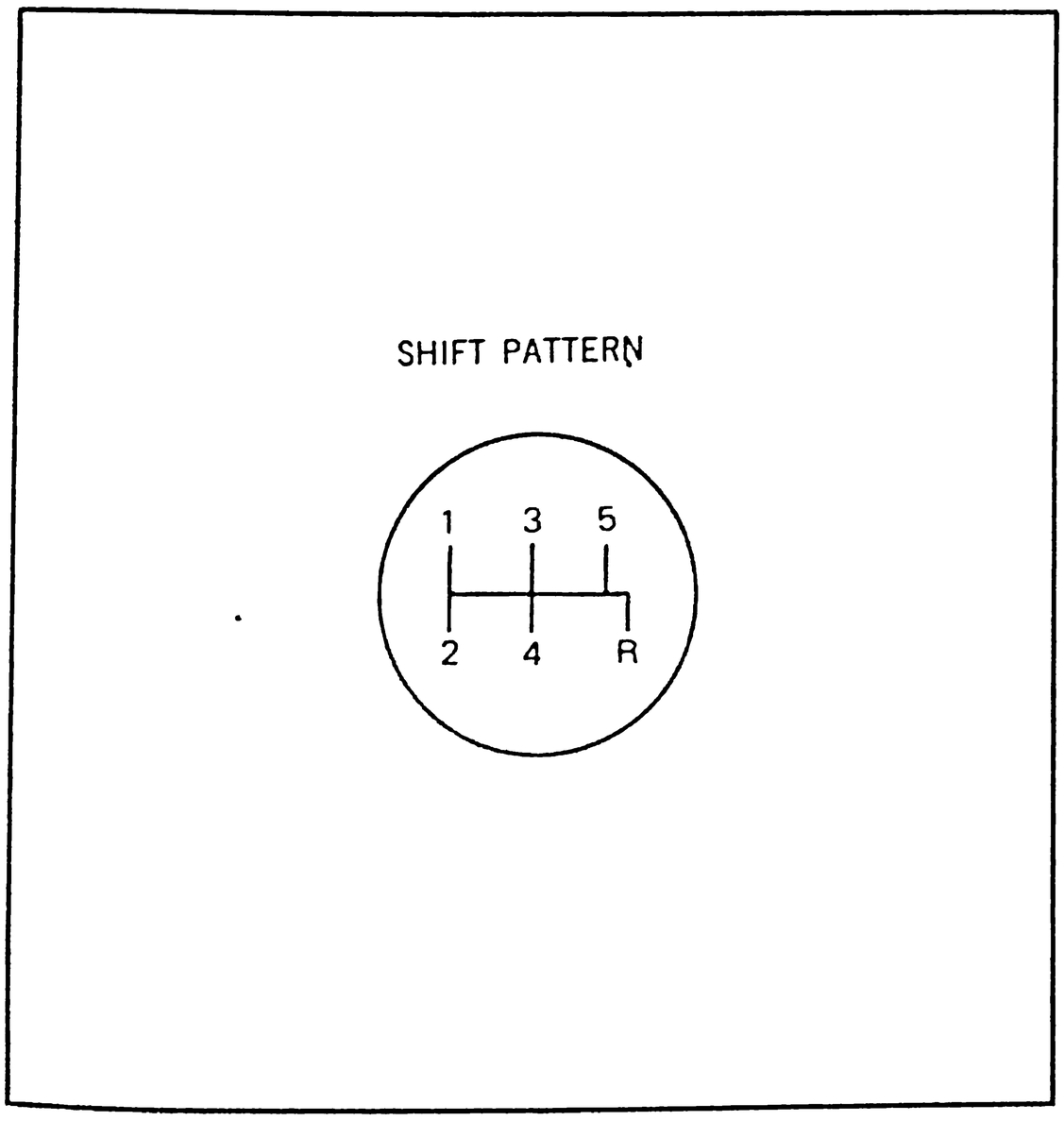

Fig. 5-8 Shifting pattern

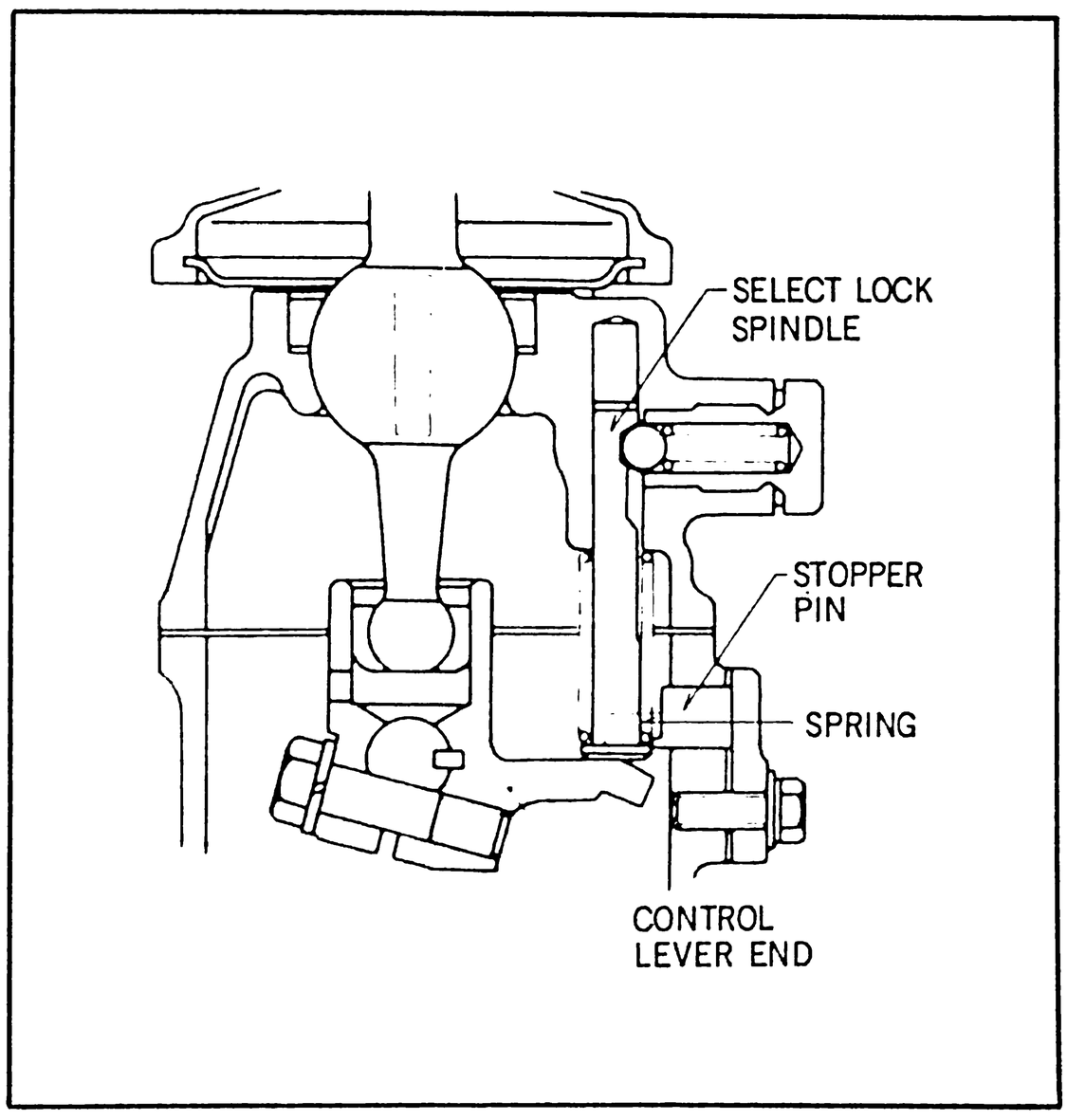

Fig. 5-9 Control case

DESCRIPTION (CONT.)

- To retain the shift lever in neutral position as shown in Fig. 5-10, a push pin has been newly equipped on 1st–2nd shift fork rod end.

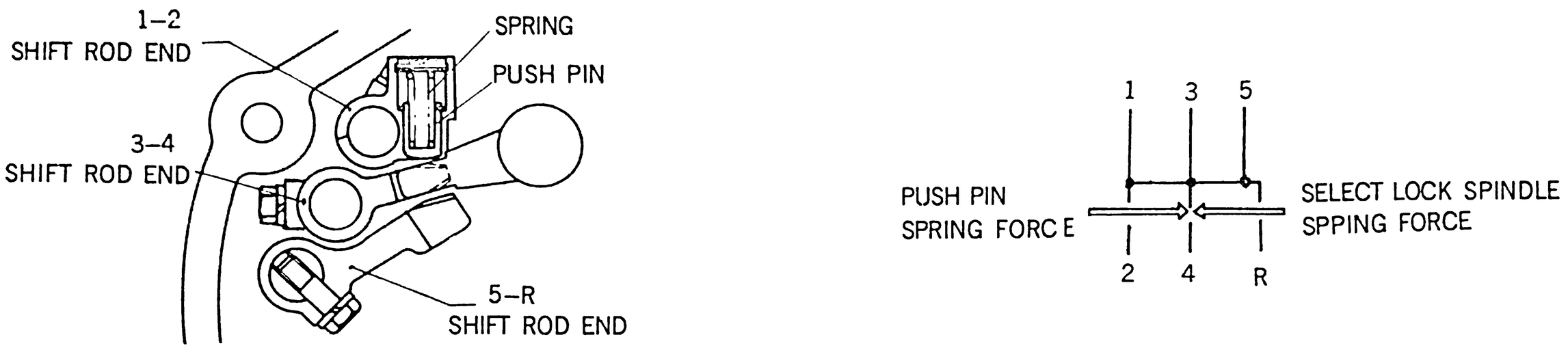

Fig. 5-10 Push pin

- When shifting the shift lever from 5th to 4th position, there is tendency to miss-shift to the reverse position. To prevent the miss-shifting, two stopper pins are installed as shown in Fig. 5-11.

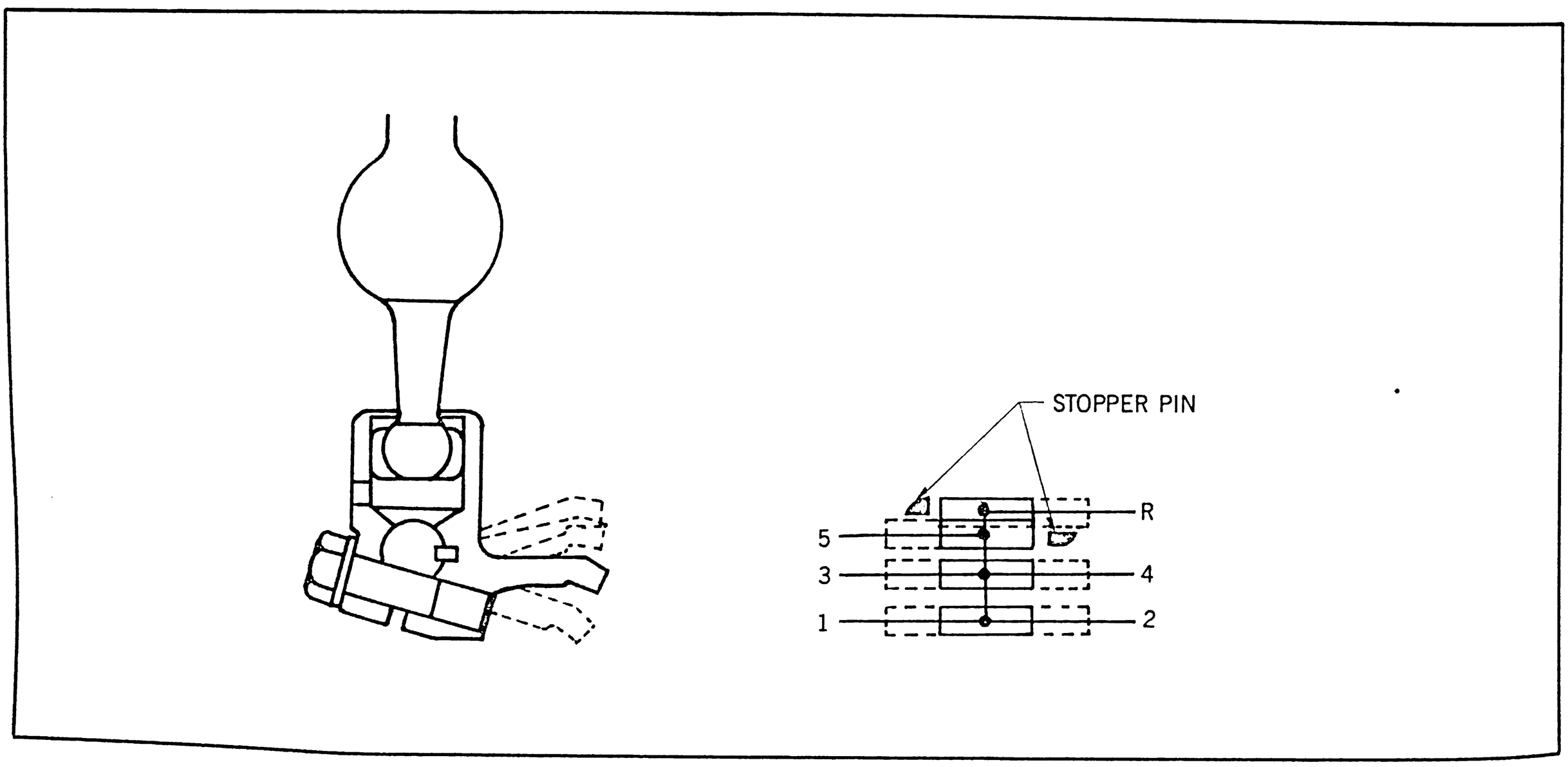

Fig. 5-11 Stopper pin

SERVICE SUMMARY

- This transmission is similar to '76 Cosmo and RX-4.

- The main shaft lock nut has a lock tab. When loosening and tightening the lock nut, shift into the second and reverse gear to lock the main shaft and use the main shaft lock nut replacer (49 1243 465) as shown in Fig. 5-12.

- Tighten the nut to 16~24 m-kg (115.7~173.6ft-lb) and punch the tab at the groove on the main shaft to lock it.

  NOTE: Do not reuse the lock nut.

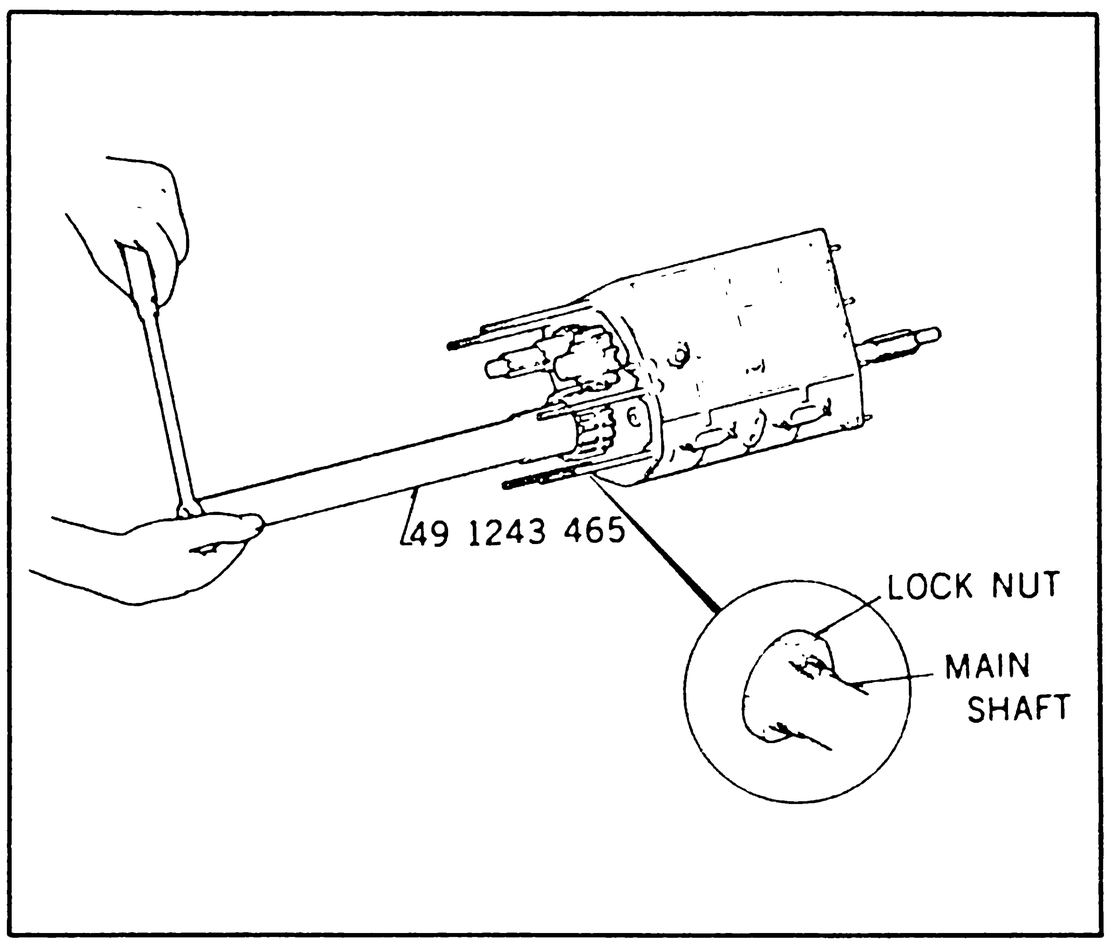

Fig. 5-12 Main shaft lock nut

- The principle specifications of adjustments are as follows.

  A) Main drive shaft bearing end play

  End play A:
  Less than 0.1 mm (0.004 in)
  Available shims:
  0.1 mm (0.004 in), 0.3 mm (0.012 in)

  B) Counter shaft front bearing end play

  End play B:
  Less than 0.1 mm (0.004 in)
  Available shims:
  0.1 mm (0.004 in), 0.3 mm (0.012 in)

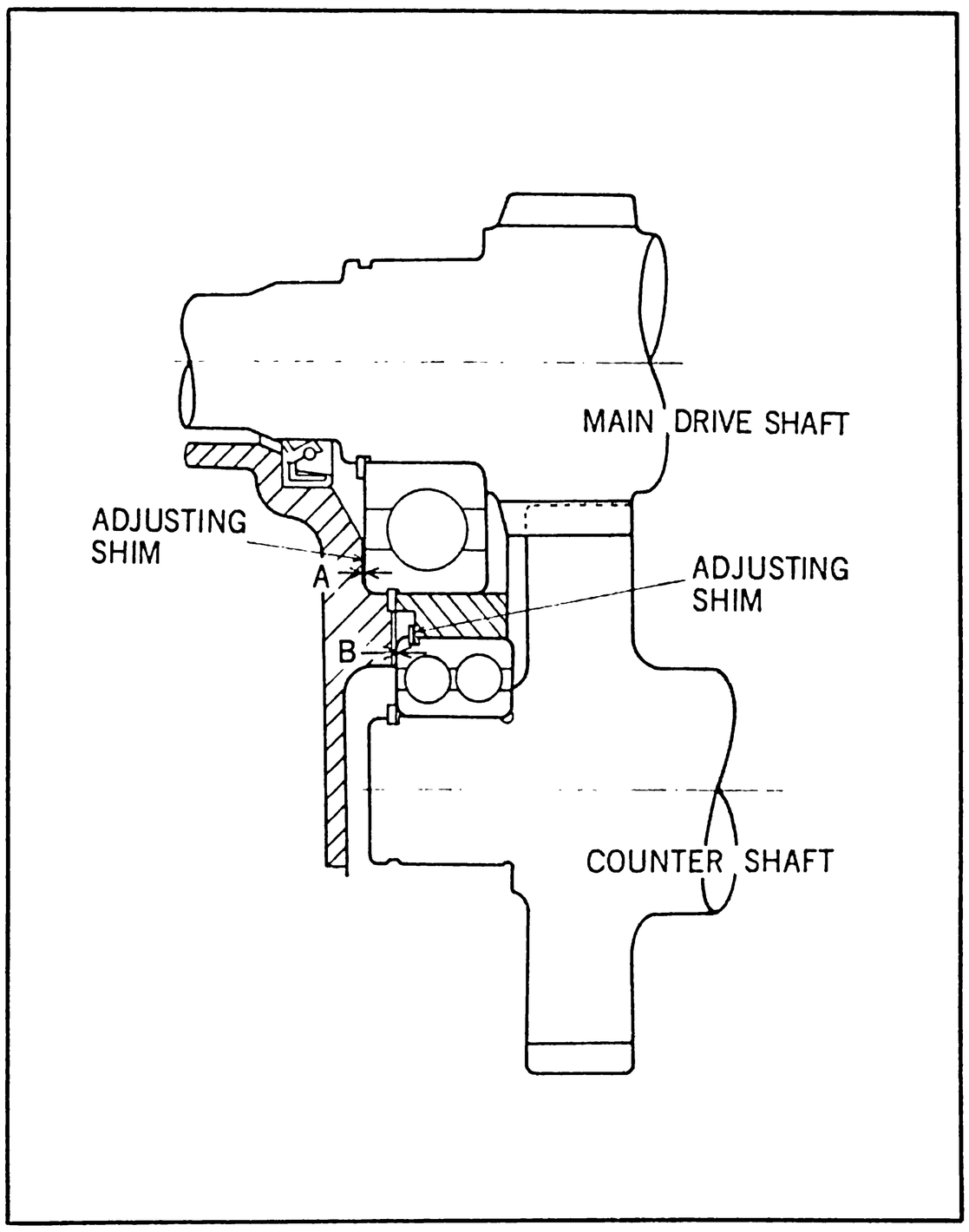

Fig. 5-13 Bearing end play

SERVICE SUMMARY (CONT.)

C) Main shaft center bearing end play

End play C:
± 0.05 mm (0.002 in)
Available shims:
0.1 mm (0.004 in), 0.3 mm (0.012 in)

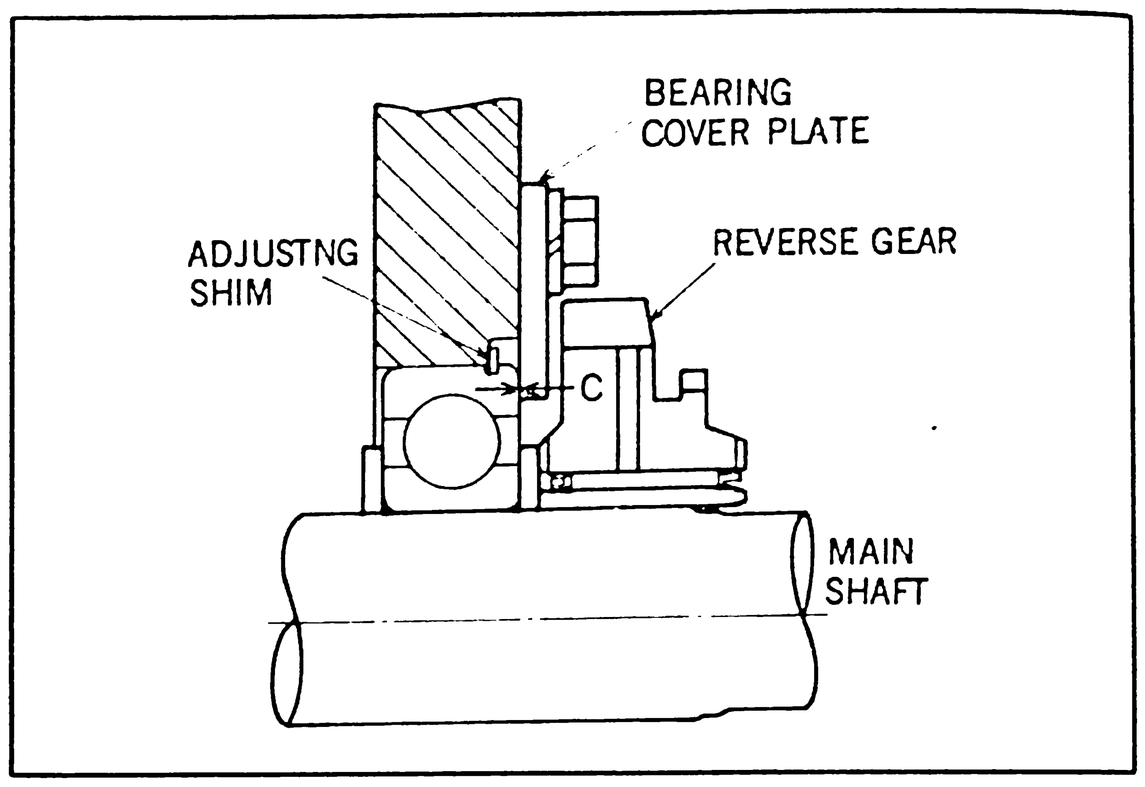

Fig. 5-14 Bearing end play

D) Clearance between fifth gear thrust washer and snap ring

Clearance D:
0.1 ~ 0.3 mm (0.004 ~ 0.012 in)
Available shims:
6.4 mm (0.252 in), 6.5 mm (0.256 in)
6.6 mm (0.260 in), 6.7 mm (0.264 in)

E) Main shaft rear bearing end play

End play E:
Less than 0.1 mm (0.004 in)
Available thrust washer:
1.9 mm (0.075 in), 2.0 mm (0.079 in)
2.7 mm (0.083 in), 2.2 mm (0.087 in)

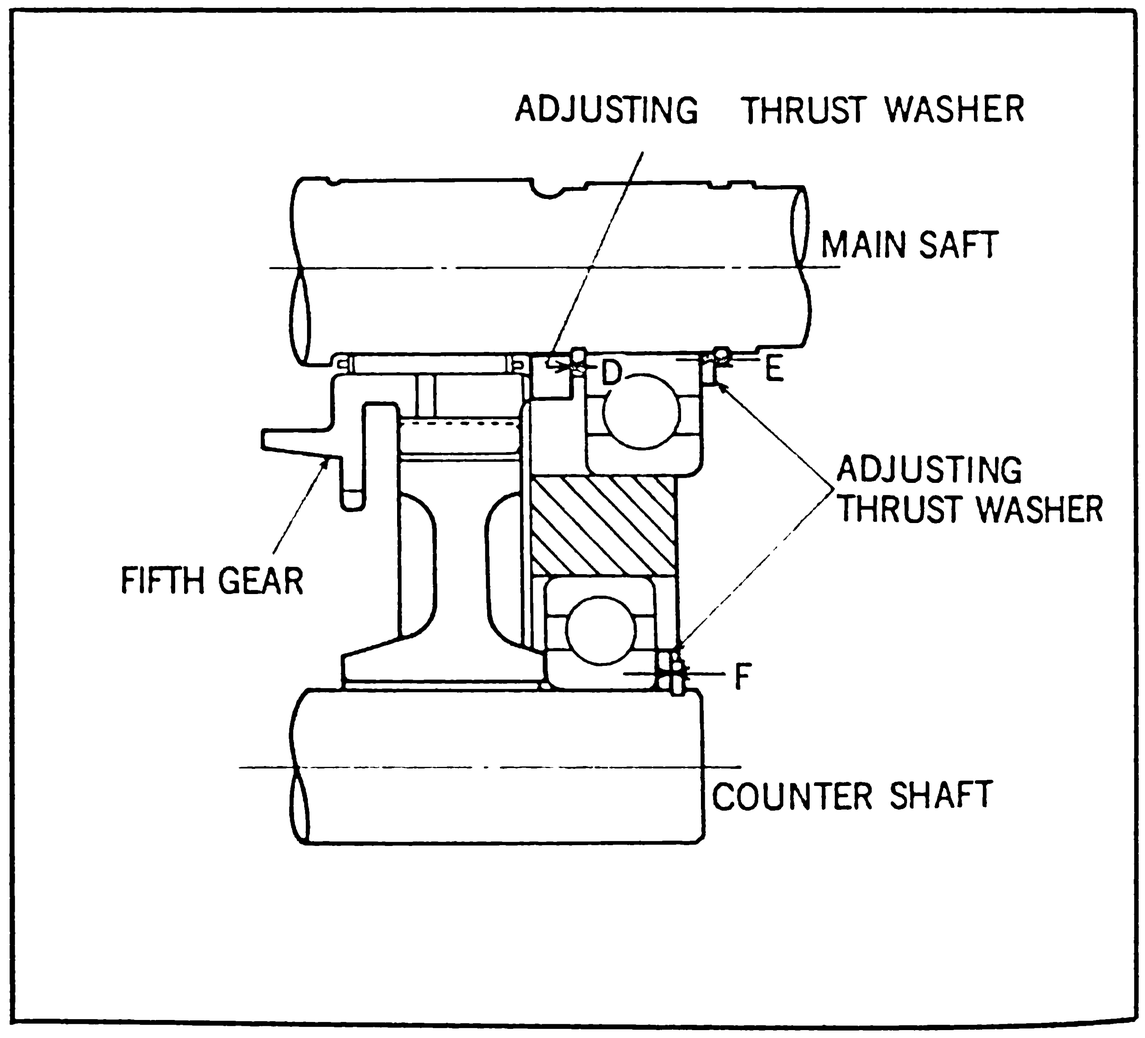

Fig. 5-15 Bearing end play

F) Counter shaft rear bearing end play

End play F:
Less than 0.15 mm (0.006 in)
Available shims:
2.6 mm (0.079 in), 2.15 mm (0.085 in)
2.3 mm (0.091 in)

DIFFERENTIAL GEAR

CALIFORNIA · FEDERAL · CANADA

DESCRIPTION

808 (1600)

DESCRIPTION

- Final gear ratio has been changed to improve the fuel consumption.
- Speedometer gear ratio has been also changed.

Gear ratio

	Final gear ratio		Speedometer gear ratio	
	'77 model	'76 model	'77 model	'76 model
Manual transmission	3.636 (40/11)	3.909 (43/11)	3.1667 (19/6)	3.4 (17/5)
Automatic transmission	3.908 (43/11) [California: 3.636 (40/11)]	4.100 (41/10)	3.4 (17/5) [California: 3.1667 (19/6)]	3.6 (18/5)

- To increase the strength of the differential carrier and decrease the total weight, the differential carrier (dimension A) and drive pinion (dimension B) have been shortened 60 mm (2.36 in) and a long collar has been discarded. (Propeller shaft has been extended 60 mm (2.36 in).)

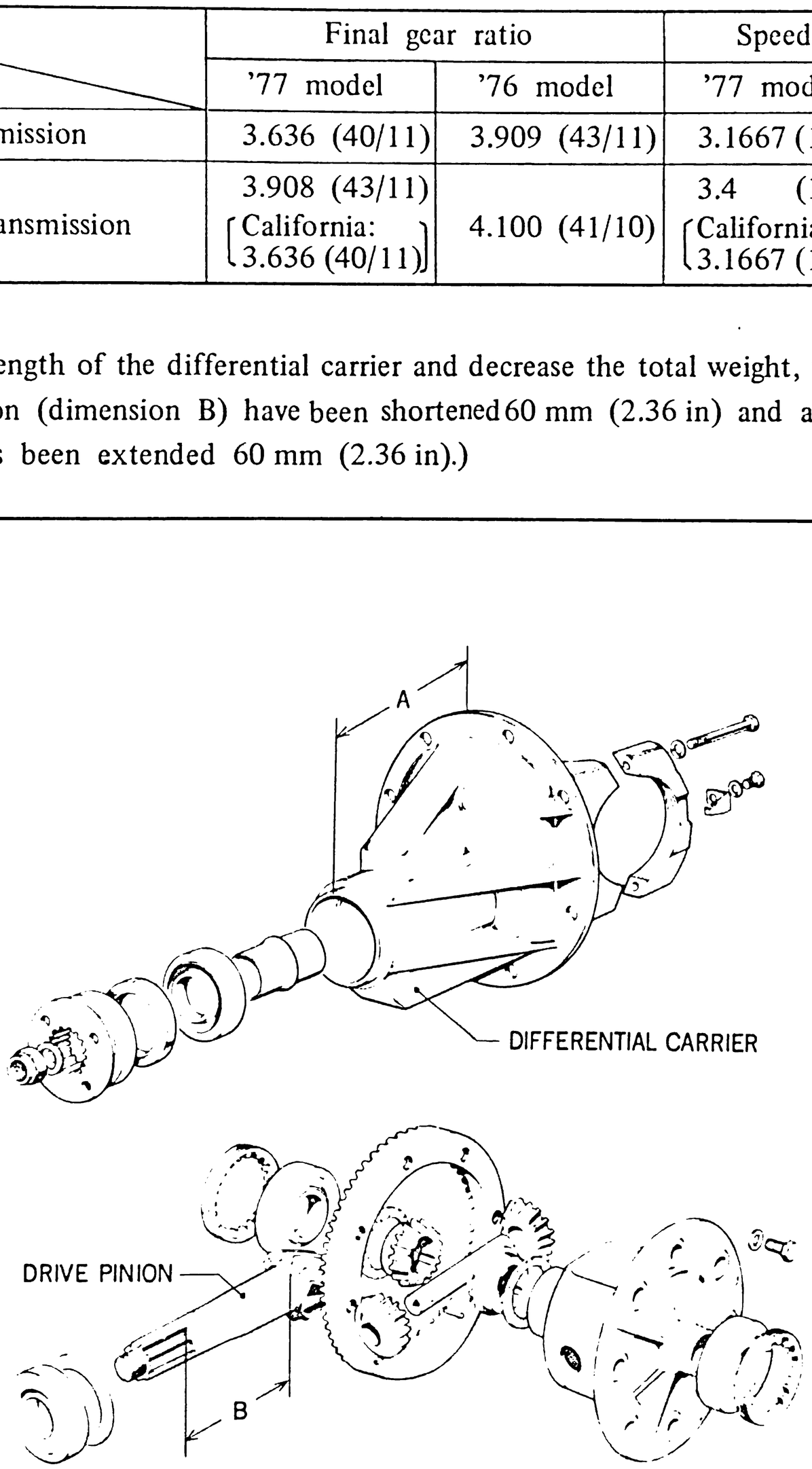

Fig. 5-16 Differential gear

BODY AND CHASSIS	CANADA
KEY CHANGE	808 (1600)

KEY CHANGE

- The following items have been changed.

ITEM	REF . PAGE
TRANSMISSION	
○ FIVE SPEED MANUAL TRANSMISSION	5–10 ~ 14
REAR AXLE	
○ DIFFERENTIAL GEAR	5–15

KEY CHANGE

- The following items have been changed.

ITEM	REF · PAGE
TRANSMISSION	
○ MANUAL TRANSMISSION GEAR RATIO	5–20
BRAKE	
○ DIFFERENTIAL PROPORTIONING VALVE	5–21 ~ 22
○ BRAKE FLUID LEVEL SENSOR	5–21, 5–23
BODY	
○ DOOR CHECKER (ONLY FOR Cosmo)	5–24
BODY ELECTRICAL	
○ FUEL AND WATER TEMPERATURE GAUGE	5–25 ~ 27
○ FUEL AND WATER TEMPERATURE GAUGE UNIT	5–25 ~ 27

MANUAL TRANSMISSION

DESCRIPTION

CALIFORNIA · FEDERAL · CANADA

RX-4 · Cosmo

DESCRIPTION

- Transmission gear ratio has been changed as follows.

Transmission gear ratio

	'77 model	'76 model
First	3.380	3.683
Second	2.002	2.263
Third	1.390	1.397
Fourth	1.000	1.000
Fifth	0.791	0.862
Reverse	3.389	3.692

BRAKE SYSTEM

DESCRIPTION

CALIFORNIA · FEDERAL

RX-4 · Cosmo

DESCRIPTION

- DIFFERENTIAL PROPORTIONING VALVE has been changed to the new type without fail indicator switch.
- BRAKE FLUID LEVEL SENSOR has taken the place of the fail indicator switch. The sensor has been installed in the reservoir tank cap.

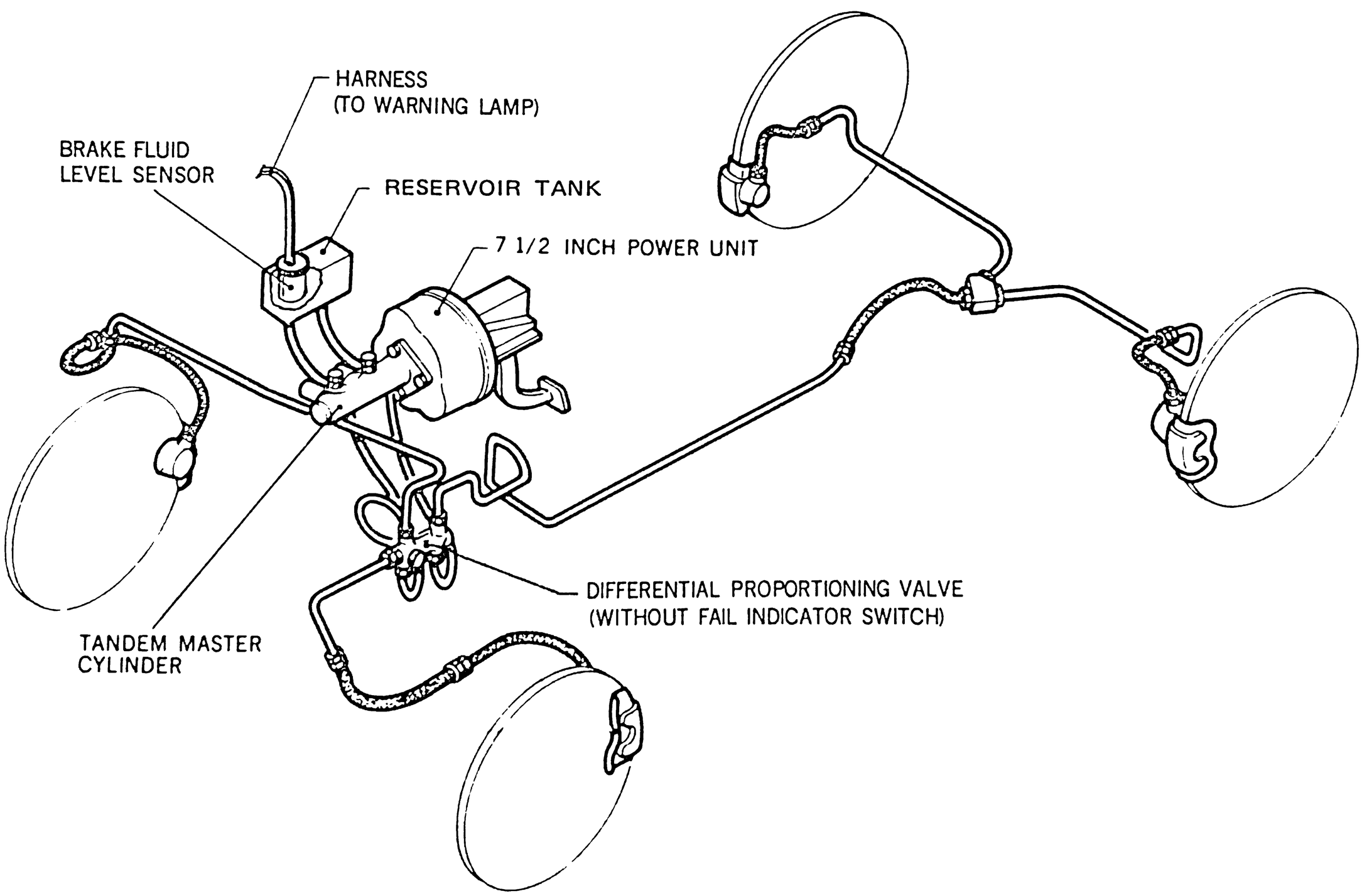

Fig. 5-17 Brake system (for Cosmo)

DIFFERENTIAL PROPORTIONING VALVE

DESCRIPTION · OPERATION

CALIFORNIA · FEDERAL

RX-4 · Cosmo

DESCRIPTION

- The function of new differential proportioning valve is similar to the old one except the fail indicator mechanism.
- This valve controls the fluid pressure to the rear wheels and prevents the locking up of the rear wheels before the front wheels in case of the panic stop.

OPERATION

- This valves operation is divided into three according to the fluid pressure from the master cylinder.

1) When the fluid pressure is less than specified value;
   The fluid pressure is applied directly to the rear wheels.
2) When the fluid pressure is more than specified value;
   The reduced fluid pressure is applied to the rear wheels.
   (The fluid pressure is controlled.)
3) When the front brake line fails;
   The fluid pressure is applied directly to the rear wheels.

Specified pressure

Cosmo		40 kg/cm² (568.8 lb/in²)
RX-4	Coupe Sedan	40 kg/cm² (568.8 lb/in²)
	Wagon	62 kg/cm² (881.4 lb/in²)

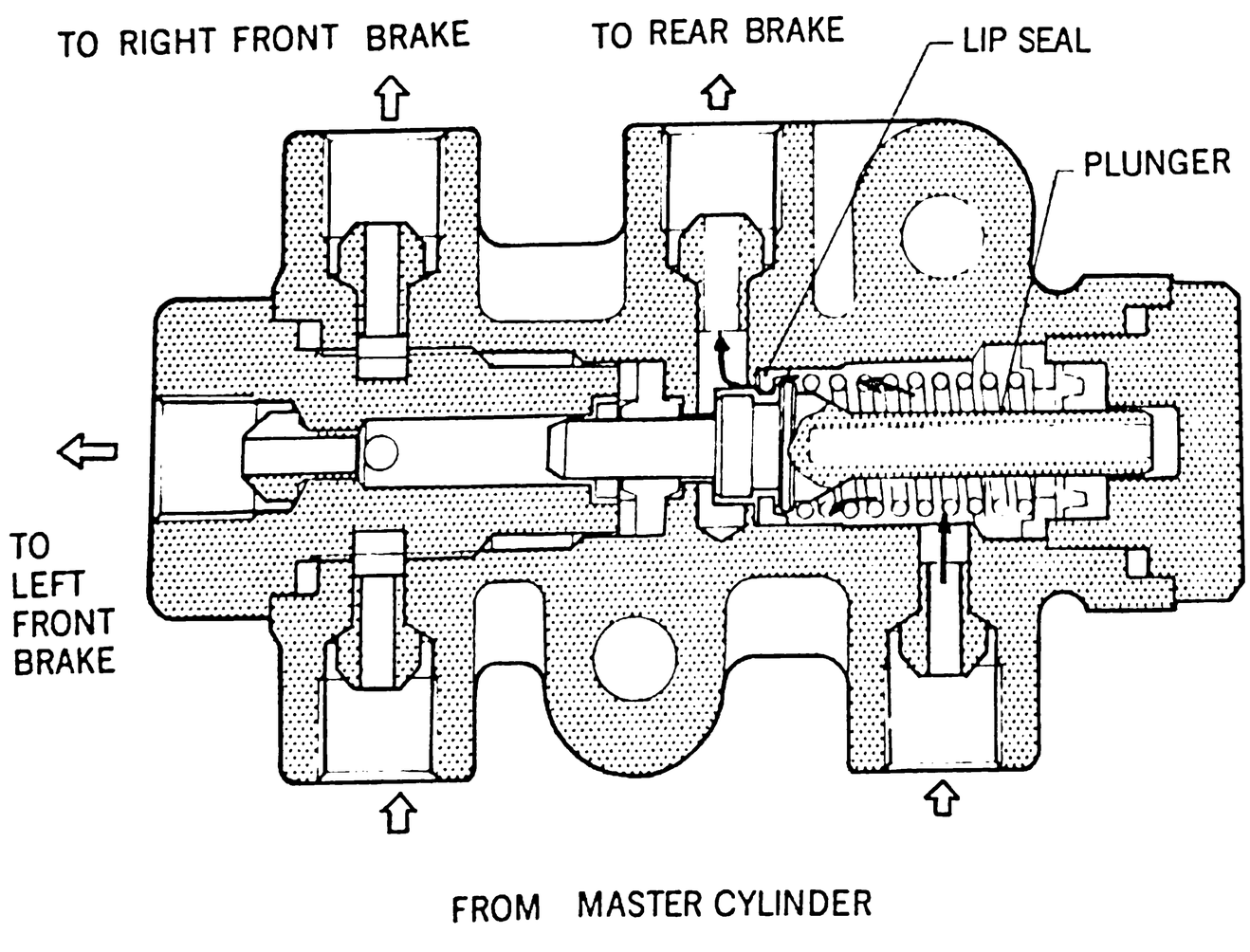

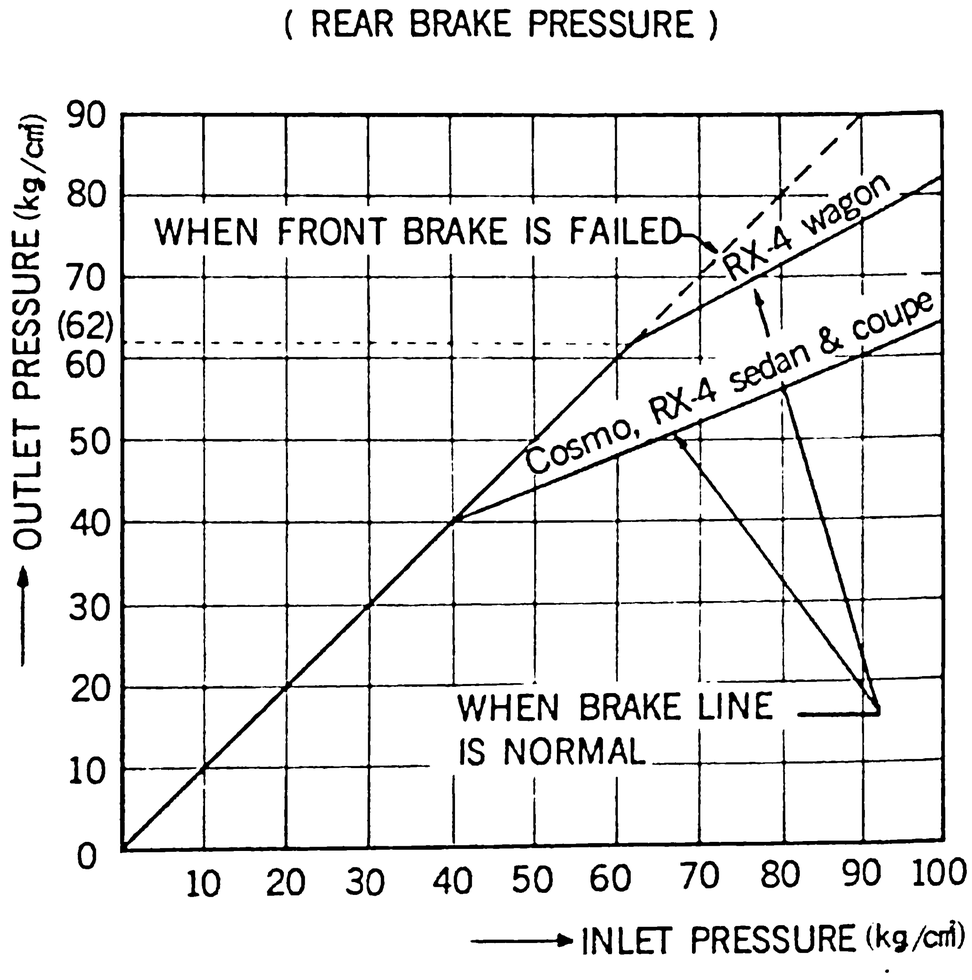

Fig. 5-18 Differential proportioning valve

BRAKE FLUID LEVEL SENSOR

DESCRIPTION · CHECKING

CALIFORNIA · FEDERAL

RX-4 · Cosmo

DESCRIPTION

- Brake fluid level sensor senses the fluid level in the reservoir tank and if the fluid level is lower than specified, the warning light will illuminate to warn necessity of the brake fluid.

- The warning light is common with the parking brake warning light.

- This sensor consist of a reed switch, a float and two magnets as shown in Fig. 5-19.

- The reed switch is actuated by the magnetic force. It is turned on when the float moves downward nearly the reed switch and the warning light illuminates.

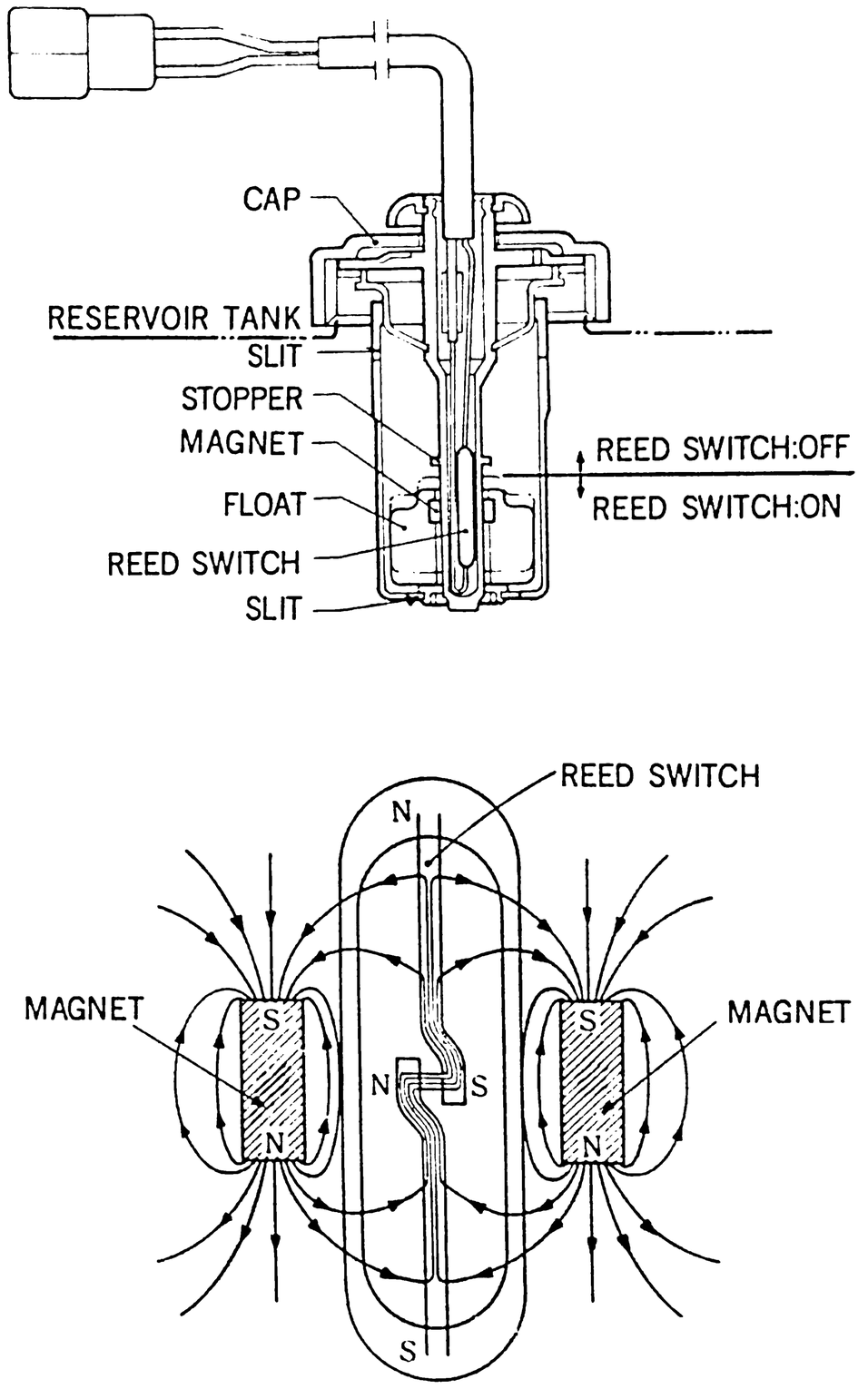

Fig. 5-19 Brake fluid level sensor (Reed switch)

CHECKING

- Check the brake fluid level sensor as follows.

1. Disconnect the coupler for the sensor.

2. Remove the sensor from the reservoir tank and check the continuity by the circuit tester as shown in Fig. 5-20.
   When the sensor is set upright, the tester should show the continuity, however, there should be no continuity when it is upside down.

3. If the trouble is found, replace the sensor.

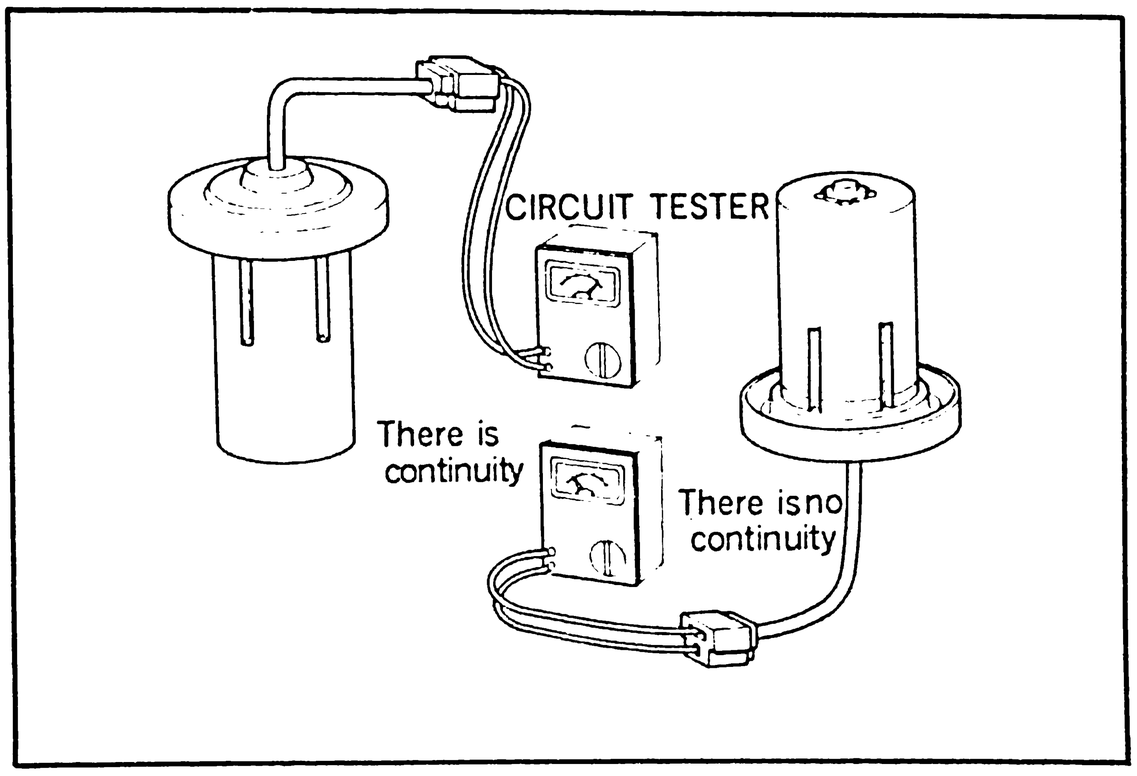

Fig. 5-20 Checking the brake fluid level sensor

DOOR CHECKER

DESCRIPTION

CALIFORNIA · FEDERAL · CANADA

Cosmo

DESCRIPTION

- When the door is opened, it can be stopped at two positions (half and full opened position). The door checker has been changed to increase the stability of the door at the half opened position.

CHECK SPRING . . . . . Tension is increased.
CHECK LEVER . . . . . Thickness is changed from 4.5 mm (0.18 in) to 5.0 mm (0.20 in)
PIN . . . . . Length becomes longer

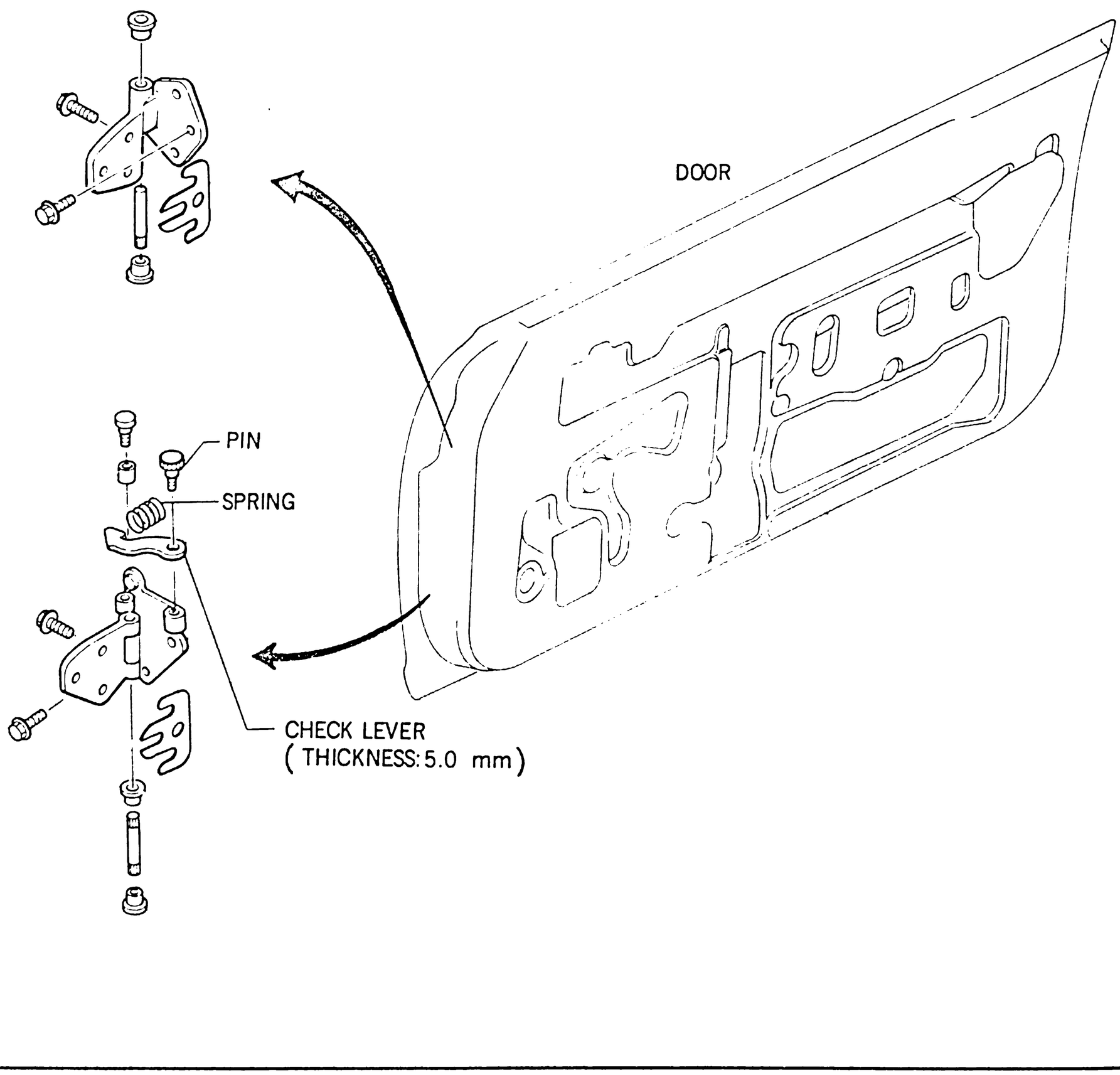

Fig. 5-21 Door checker

FUEL AND WATER TEMPERATURE GAUGE

CALIFORNIA · FEDERAL · CANADA

DESCRIPTION

RX-4 · Cosmo

DESCRIPTION

- Fuel and water temperature gauges have been changed from the resister to bimetal type as shown in Fig. 5–22.
- According to the above modification the gauge units have been changed in characteristic (resistance). See Fig. 5–23.

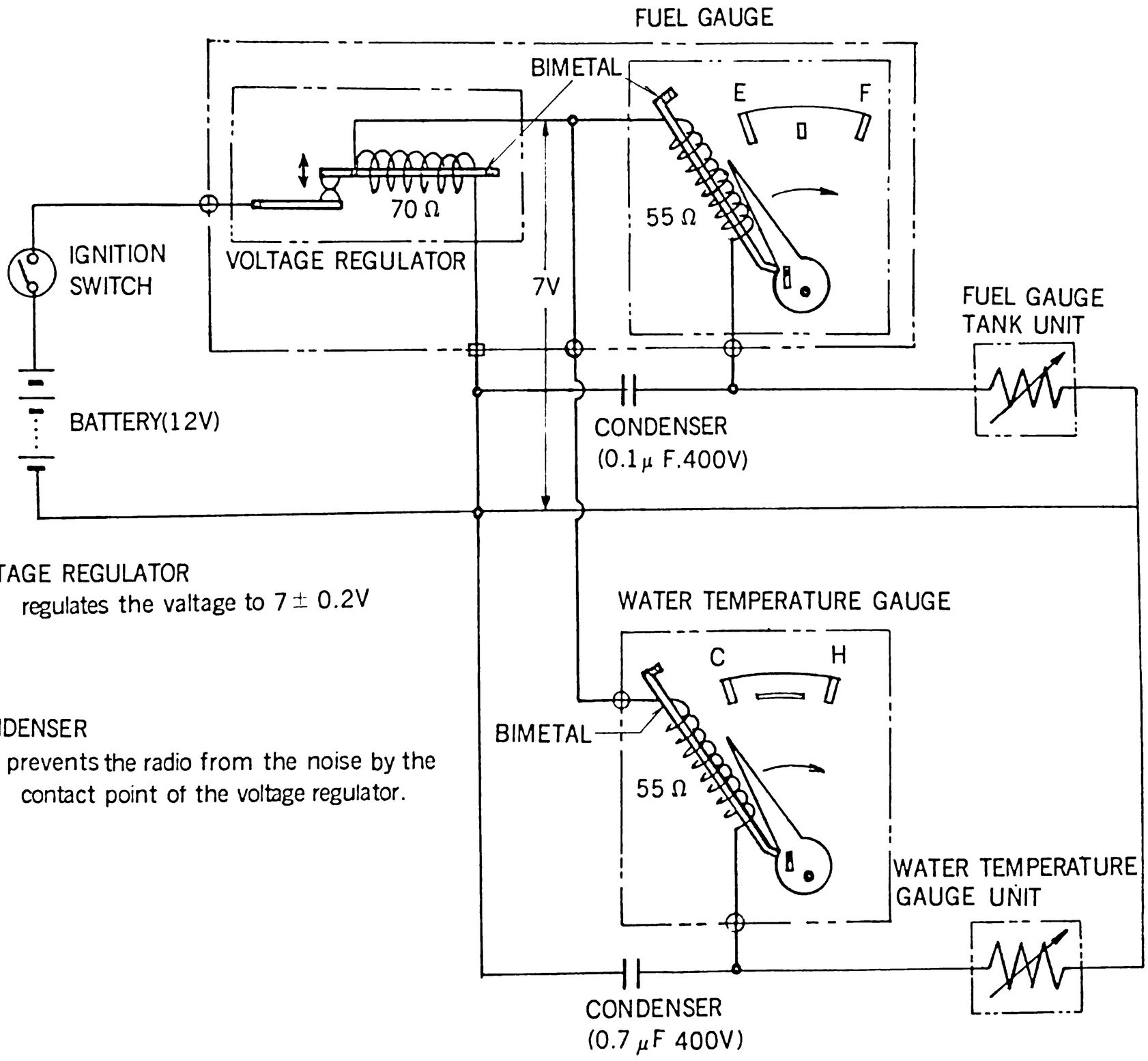

- VOLTAGE REGULATOR
  regulates the valtage to 7 ± 0.2V

- CONDENSER
  prevents the radio from the noise by the contact point of the voltage regulator.

Fig. 5-22 Diagram of fuel and water temperature gauge

FUEL AND WATER TEMPERATURE GAUGE

CHECKING

CALIFORNIA · FEDERAL · CANADA

RX-4 · Cosmo

CHECKING

- Checking procedures are similar to the '76 year models.

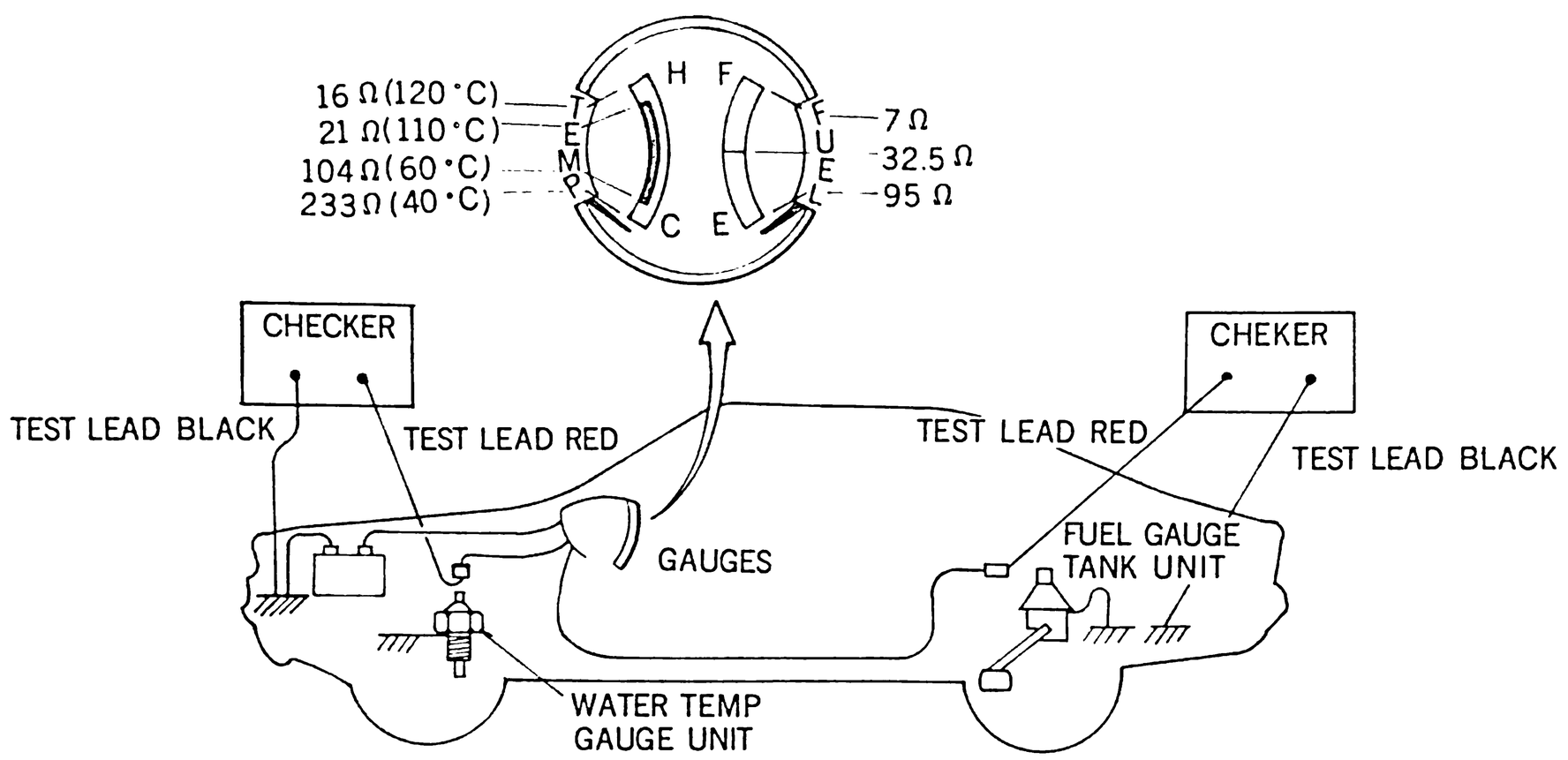

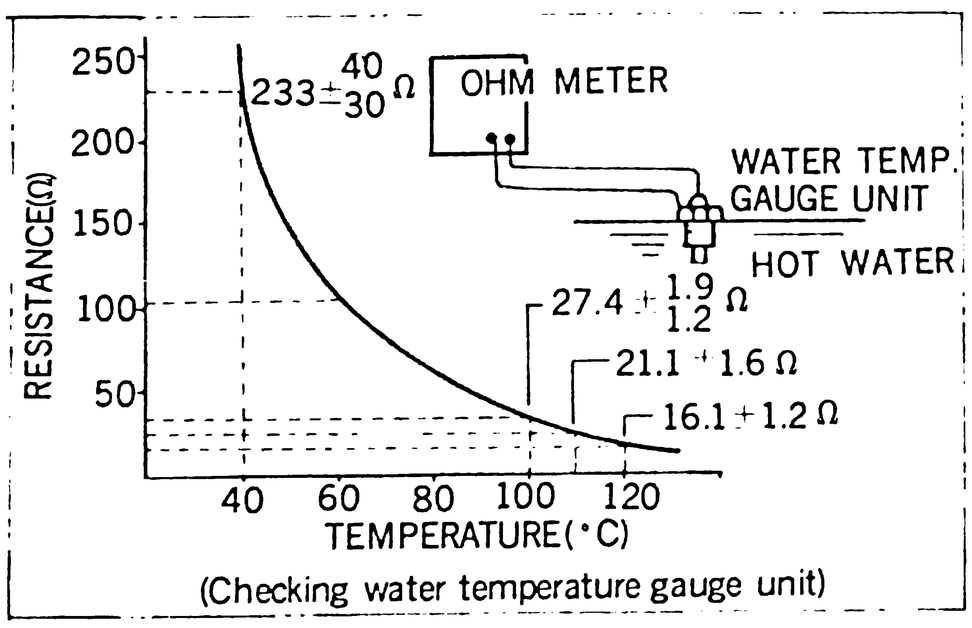

(Checking water temperature gauge unit)

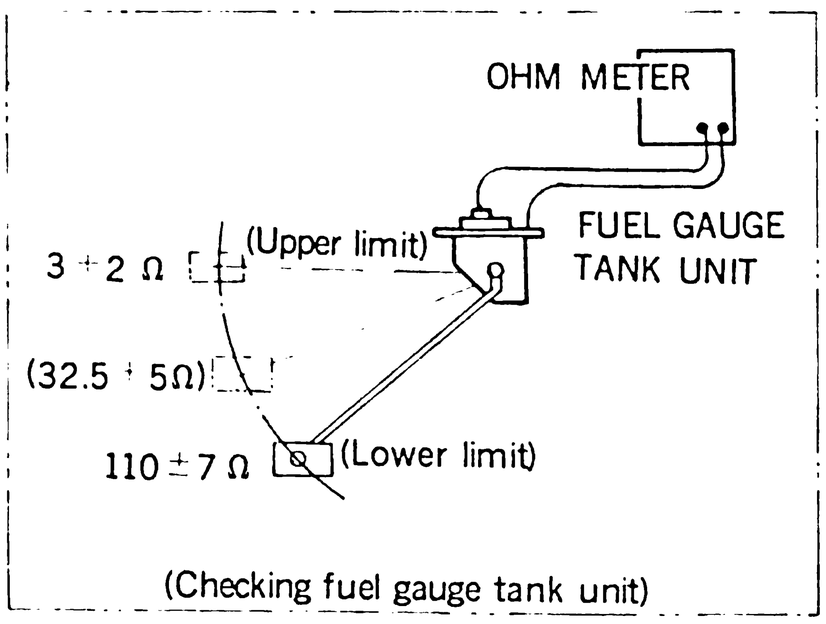

(Checking fuel gauge tank unit)

Fig. 5-23 Checking gauge and unit

NOTE:

- It takes 50 ~ 80 seconds for the gauges to show the correct value after ignition switch is turned on.
- A needle of some water temperature gauges shows to the "C" mark when the ignition switch is off (normally it shows under the "C" mark), however, these gauges are not deffective.
- Do not apply the battery voltage to the gauge units directly. They may burn out or melt.

FUEL AND WATER TEMPERATURE GAUGE

CHECKING (CONT.) · SERVICE SUMMARY

CALIFORNIA · FEDERAL · CANADA

RX-4 · Cosmo

CHECKING (CONT.)

- When checking these gauges removed from the car, connect the battery and the checker to the gauges as shown in Fig. 5-24.

NOTE:

Make sure the circuit for voltage regulator is grounded and do not apply the battery voltage directly to the water temperature gauge.

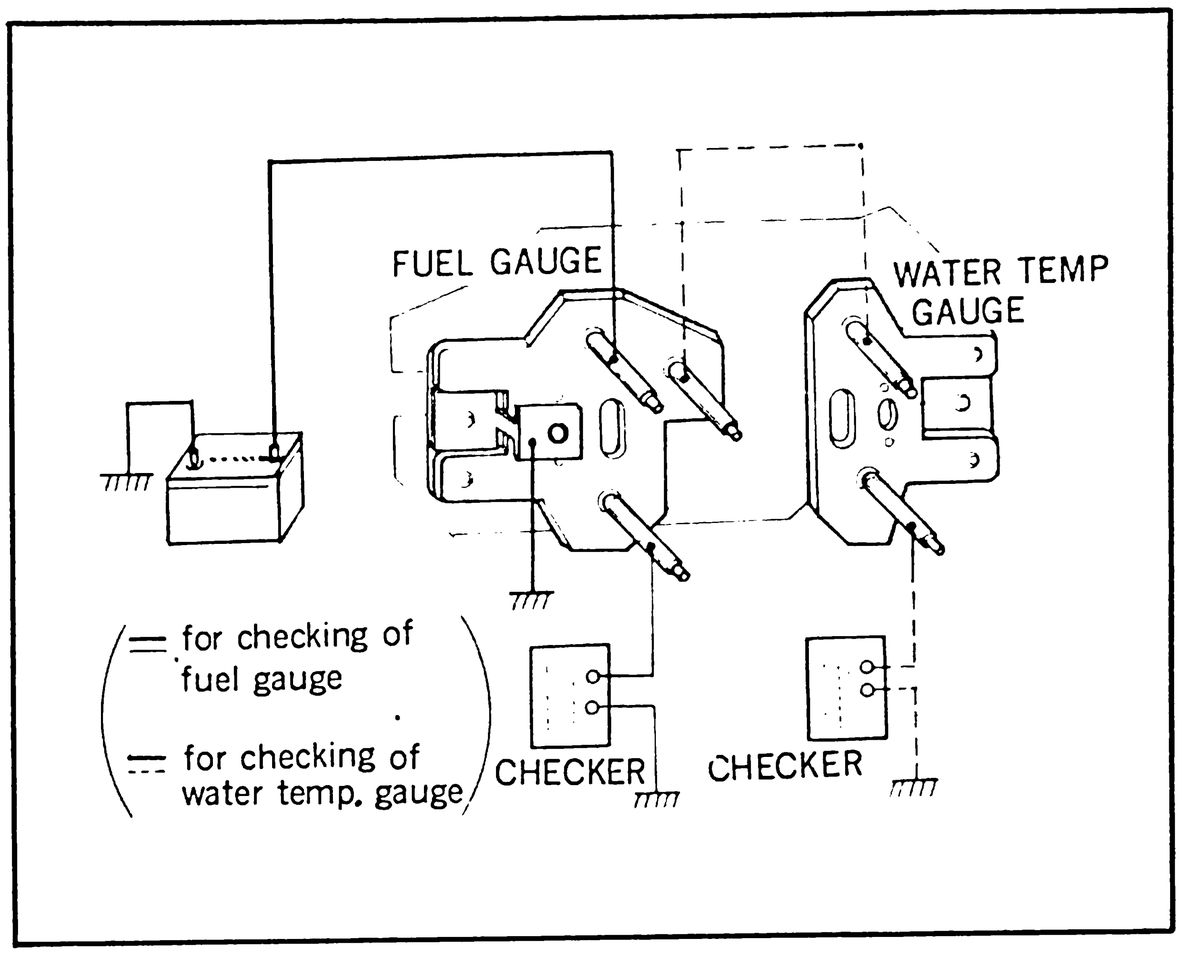

Fig. 5-24 Checking the gauges (off the car)

SERVICE SUMMARY

- These gagues and units are not interchangeable old ones.
- To prevent misinstallation, distinguish new and old by shape and color as shown in Fig. 5-25.

• FUEL AND WATER TEMPERATURE GAUGE

NEW TYPE

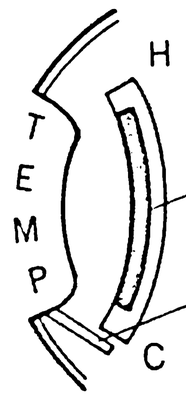

OLD TYPE

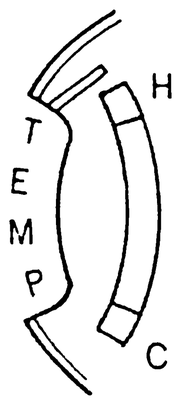

• WATER TEMPERATURE GAUGE UNIT

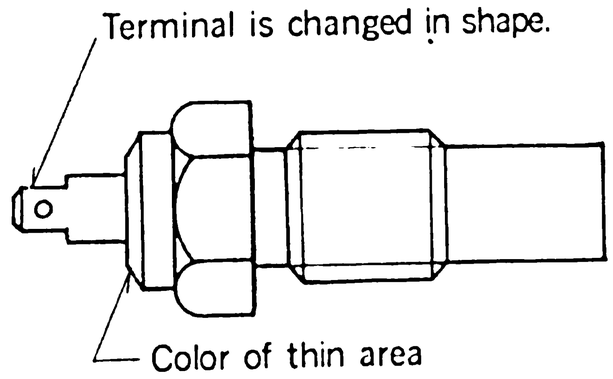

NEW TYPE	GREEN
OLD TYPE	BROWN

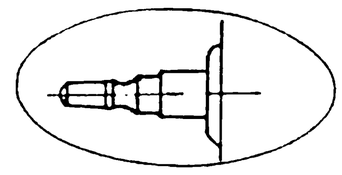

(Old type of terminal)

• FUEL GAUGE TANK UNIT

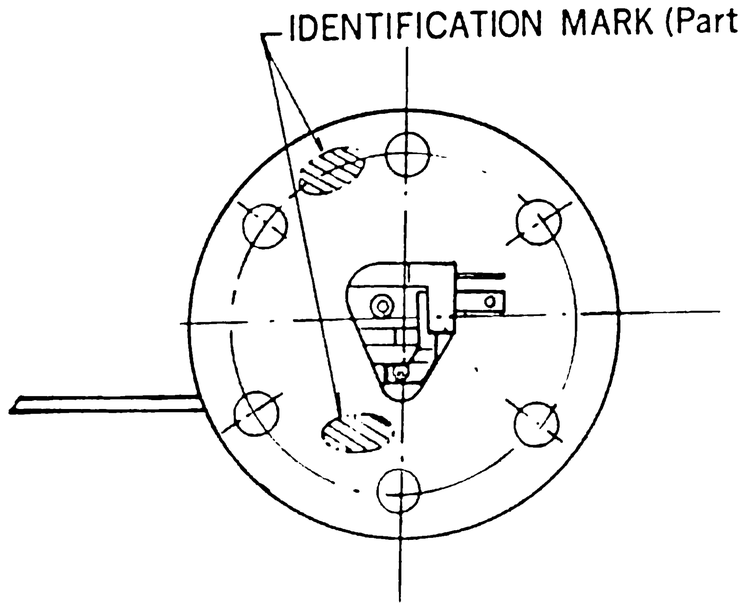

NEW TYPE	OLD TYPE
3600	1011
8712	1011
8720	1029

Fig. 5-25 Distinction between new and old type

KEY CHANGE

- The following items have been changed.

ITEM	REF · PAGE
TRANSMISSION	
○ MANUAL TRANSMISSION GEAR RATIO	5 – 20
BODY	
○ DOOR CHECKER (ONLY FOR Cosmo)	5 – 24
BODY ELECTRICAL	
○ FUEL AND WATER TEMPERATURE GAUGE	5 – 25 ~ 27
● FUEL AND WATER TEMPERATURE GAUGE	5 – 25 ~ 27

6

MOTOR VEHICLE SAFETY SYSTEM

808(1300)

808(1600)

RX-4

Cosmo

MOTOR VEHICLE SAFETY SYSTEM

KEY CHANGE

CALIFORNIA · FEDERAL · CANADA

808 (1300) · 808 (1600) · RX-4 · Cosmo

KEY CHANGE

- The following items have been changed.

ITEM \ APPLICATION	CALIFORNIA · FEDERAL			CANADA		
	808 (1300)	808 (1600)	RX-4·Cosmo	808 (1300)	808 (1600)	RX-4·Cosmo
MVSS–219 WINDSHIELD ZONE INTRUSION						
o ENGINE HOOD	○	○	○			○
o ENGINE HOOD LATCH	○	○	○			○
MVSS–301 FUEL SYSTEM INTEGRITY						
o FUEL FILLER CAP	○	○	○	○	○	○
o FUEL FILLER BOX	○ *1	○ *1				
o FUEL FILTER	○					
o FUEL CUT VALVE	○	○	○			
o FUEL PUMP		○ *1				
o FUEL PUMP COVER	○ *2	○ *2	○ *1	○ *2	○ *2	○ 1
o PIPING AROUND FUEL PUMP			○ *1			○ *1

(NOTE:
*1 means "Except wagon"
*2 means "Only wagon")

6

MOTOR VEHICLE SAFETY SYSTEM (MVSS)

INTRODUCTION · DESCRIPTION

CALIFORNIA · FEDERAL · CANADA

808 (1300) · 808 (1600) · RX-4 · Cosmo

INTRODUCTION

Motor Vehicle Safety System (MVSS) 219 and 301 is applied to '77 year models to make the motor vehicle and occupants more safety.

MVSS–219——Windshield Zone Intrusion

This standard specifies limits for the displacement into the windshield area of motor vehicle components druing and after a crash. The purpose of this standard is to reduce crash injuries and fatalities that result from occupants contacting vehicle components displaced near or through the windshield.

MVSS–301——Fuel System Integrity

This standard specifies requirements for the integrity of motor vehicle fuel system.
The purpose of this standard is to reduce deaths and injuries occuring from fires that result from fuel spillage during and after motor vehicle clashes.

DESCRIPTION

To cope with these standards, some parts in the fuel system and near the windshield have been changed as follows.

[MVSS–219]

- **ENGINE HOOD and HOOD LATCH**

808 (1300) · 808 (1600):

The thickness of the reinforcement has been increased from 1.0 mm (0.039 in) to 1.4 mm (0.055 in) and the guard plate has been newly installed as shown in Fig. 6-1.
This prevents the engine hood from getting out of place when motor vehicle clashes.

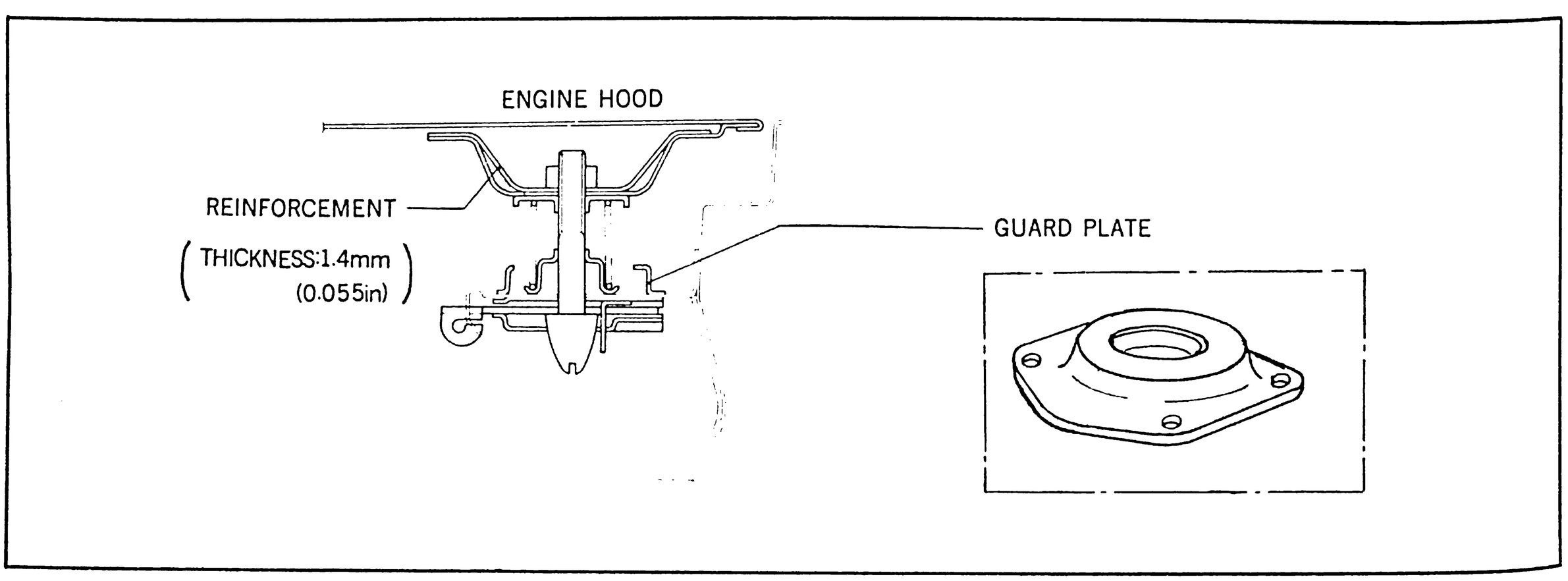

Fig. 6-1 Hood latch [808 (1300) · 808 (1600)]

MOTOR VEHICLE SAFETY SYSTEM

DESCRIPTION (CONT.)

CALIFORNIA · FEDERAL · CANADA

808 (1300) · 808 (1600) · RX-4 · Cosmo

RX-4 · Cosmo:

A part of the engine hood reinforcements has been changed, as shown in Fig. 6-2, to be easily bent at the modified portion.

And the configuration of the hood latch has been changed to move 20° downward and decrease the damage.

Thus, the engine hood is prevented from getting out of place when motor vehicle clashes.

HOOD LATCH

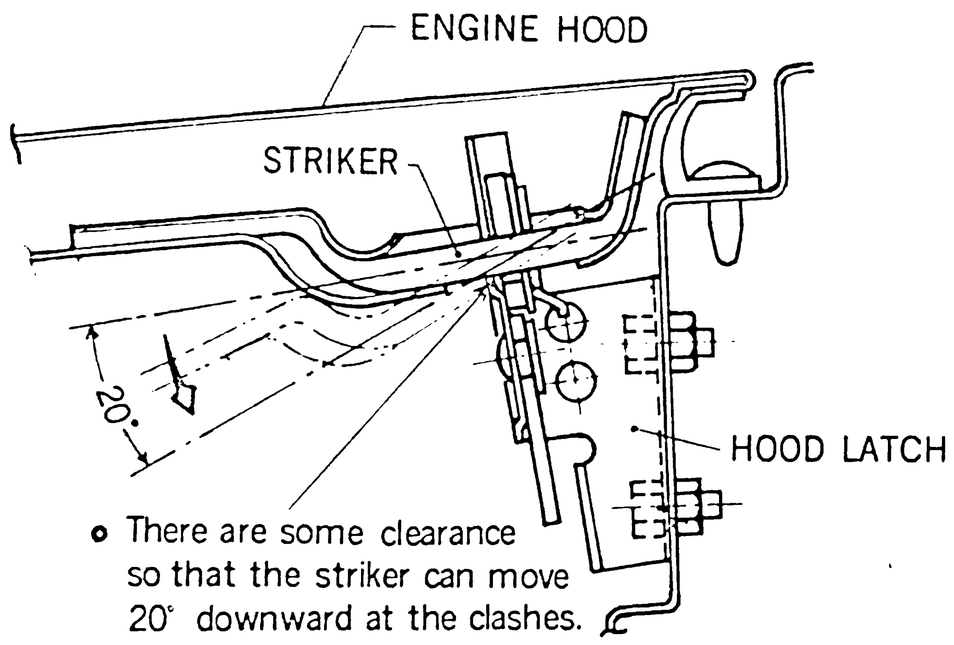

- There are some clearance so that the striker can move 20° downward at the clashes.

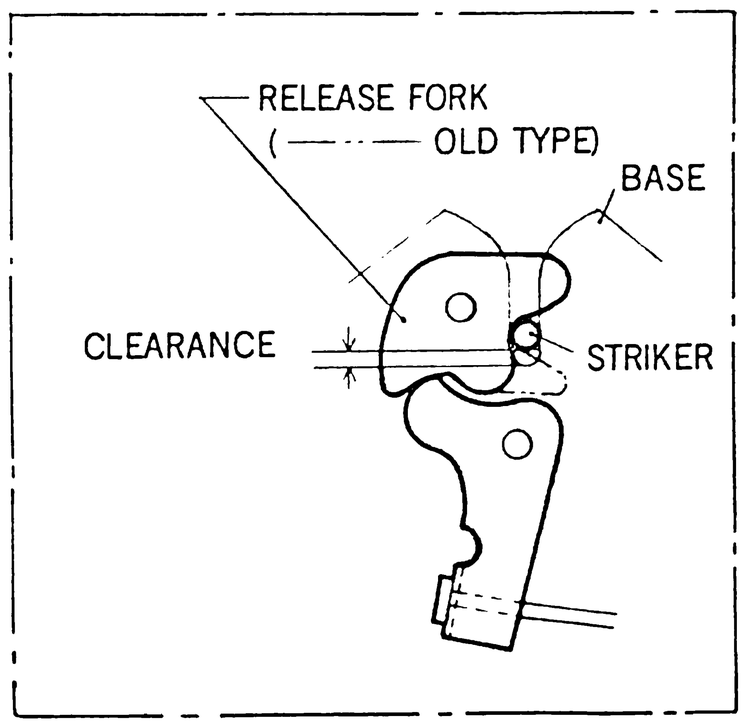

ENGINE HOOD

COSMO

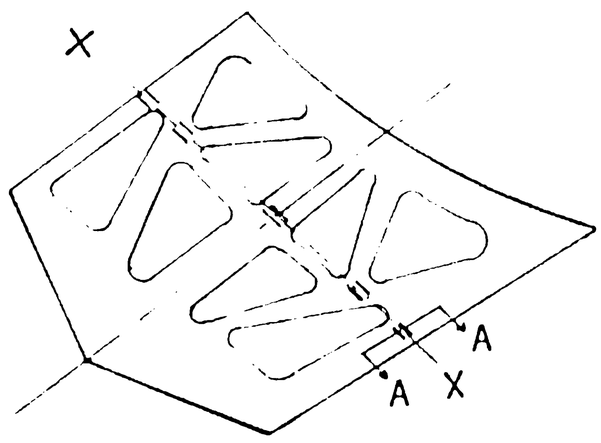

RX–4

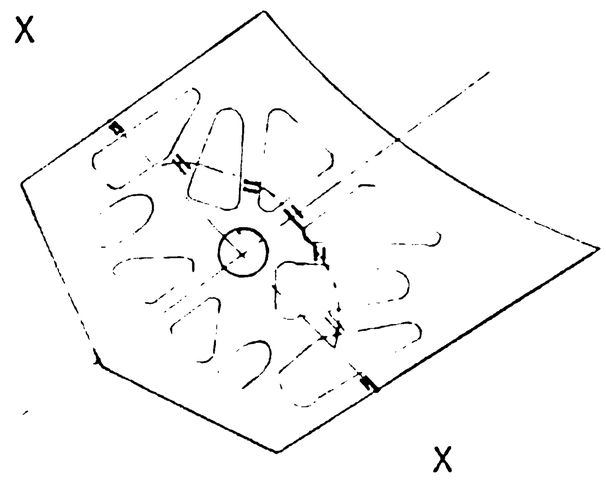

- Engine hood is bent at x–x line when the vehicle clashes.

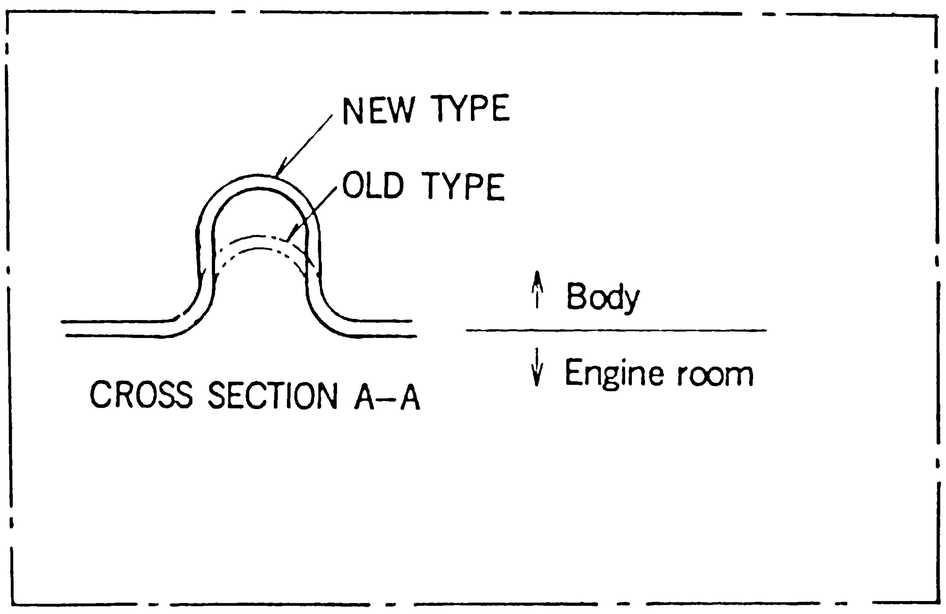

Fig. 6-2 Engine hood and hood latch (RX–4 · Cosmo)

- FUEL FILLER CAP

The thickness of the spring has been changed from 0.6 mm (0.024 in) to 0.7 mm (0.028 in) to prevent the cap from getting out of place in case of accident, Fig. 6-3.

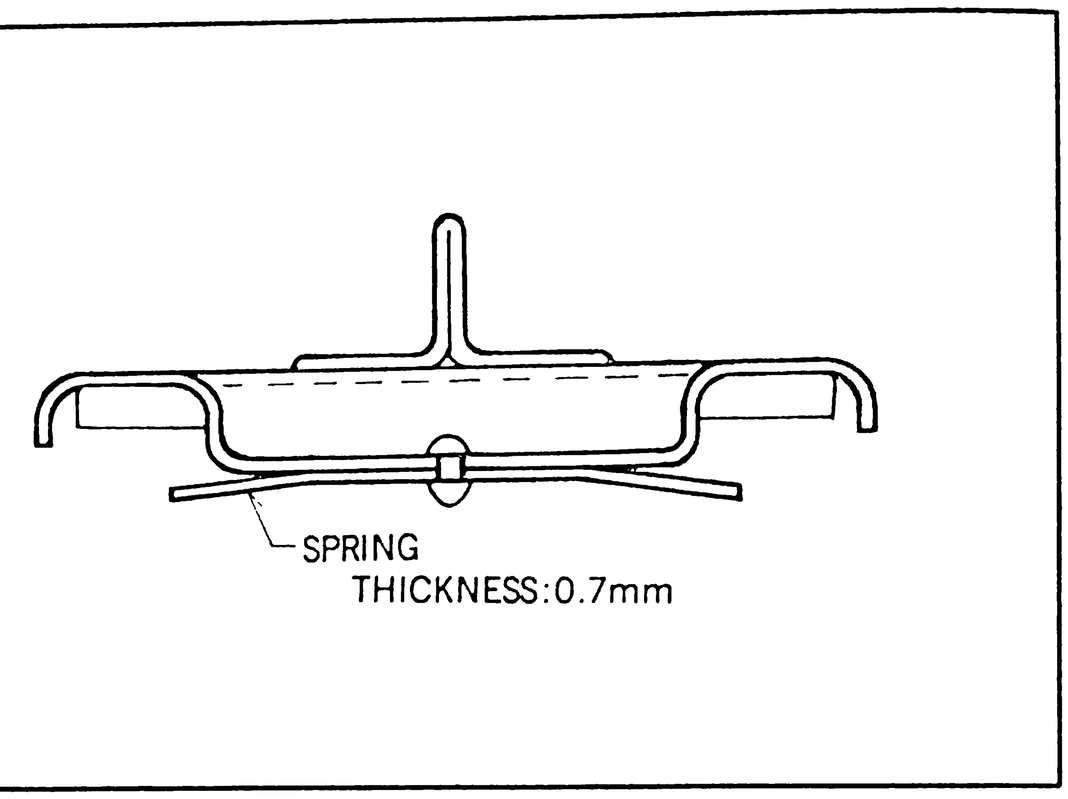

Fig. 6-3 Fuel filler cap

- FUEL FILLER BOX

The reinforcements have been installed, as shown in Fig. 6-4, to increase the strength of the fuel filler box and pipe.

- FUEL FILTER

The location of the fuel filter has been lowered 100 mm (3.94 in) from the original location (at the side of the right suspension tower) in order to protect it from the damage in case of accident, Fig. 6-5.

- FUEL CUT VALVE

The location of the fuel cut valve has been changed from the original location to under No. 3 cross-member to protect it from the damage, Fig. 6-5.

- FUEL PUMP

The fuel pump has been relocated to the left rear tire housing to protect it from the damage.

- FUEL PUMP COVER

The configuration of the cover is changed, as shown in Fig. 6-5, to protect the fuel hose.

- PIPING AROUND FUEL PUMP

Inlet pipe and hose of the pump have changed, as shown in Fig. 6-5, to prevent the fuel hose from disconnecting.

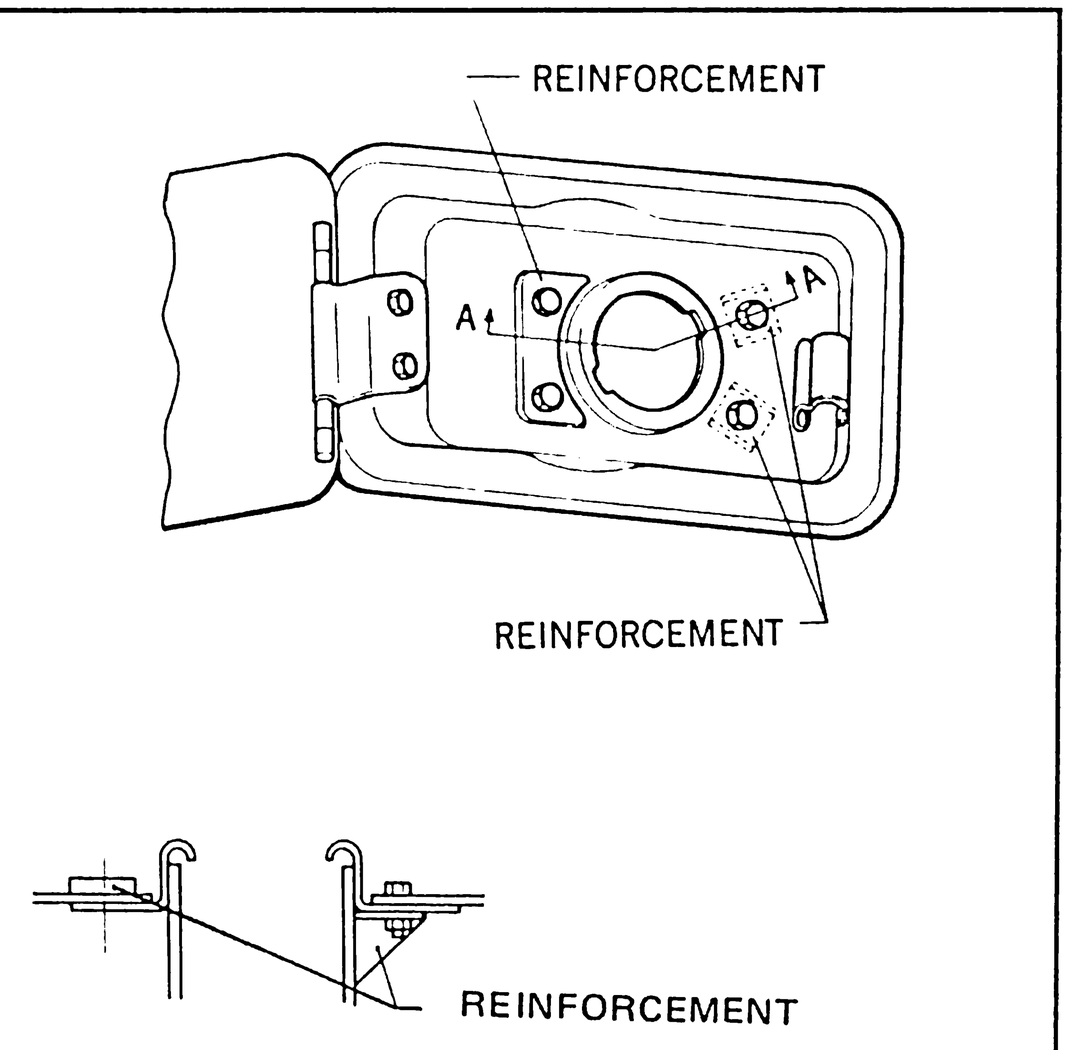

Fig. 6-4 Fuel filler box

MOTOR VEHICLE SAFETY SYSTEM (MVSS)	CALIFORNIA · FEDERAL · CANADA
DESCRIPTION (CONT.)	808 (1300) · 808 (1600) · RX-4 · Cosmo

RX-4 · Cosmo

- **808 (1600)** is similar to this model

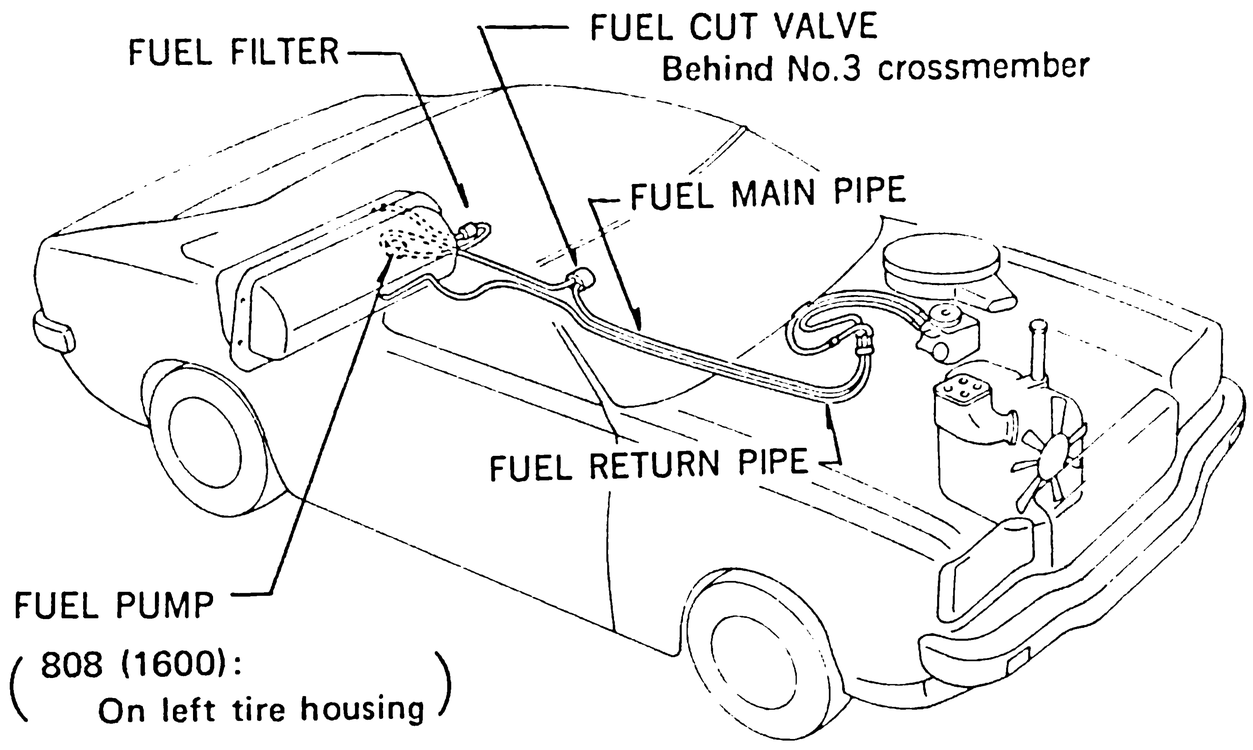

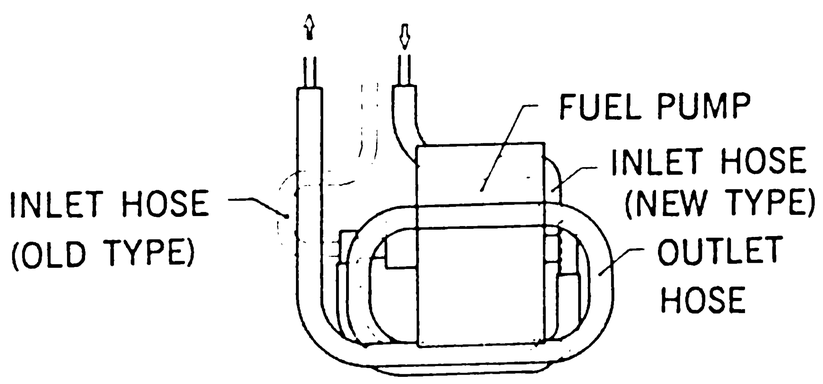

(PIPING AROUND FUEL PUMP)

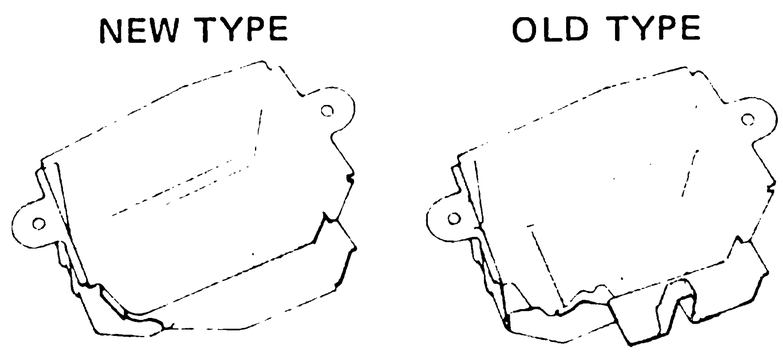

(FUEL PUMP COVER)

808 (1300)

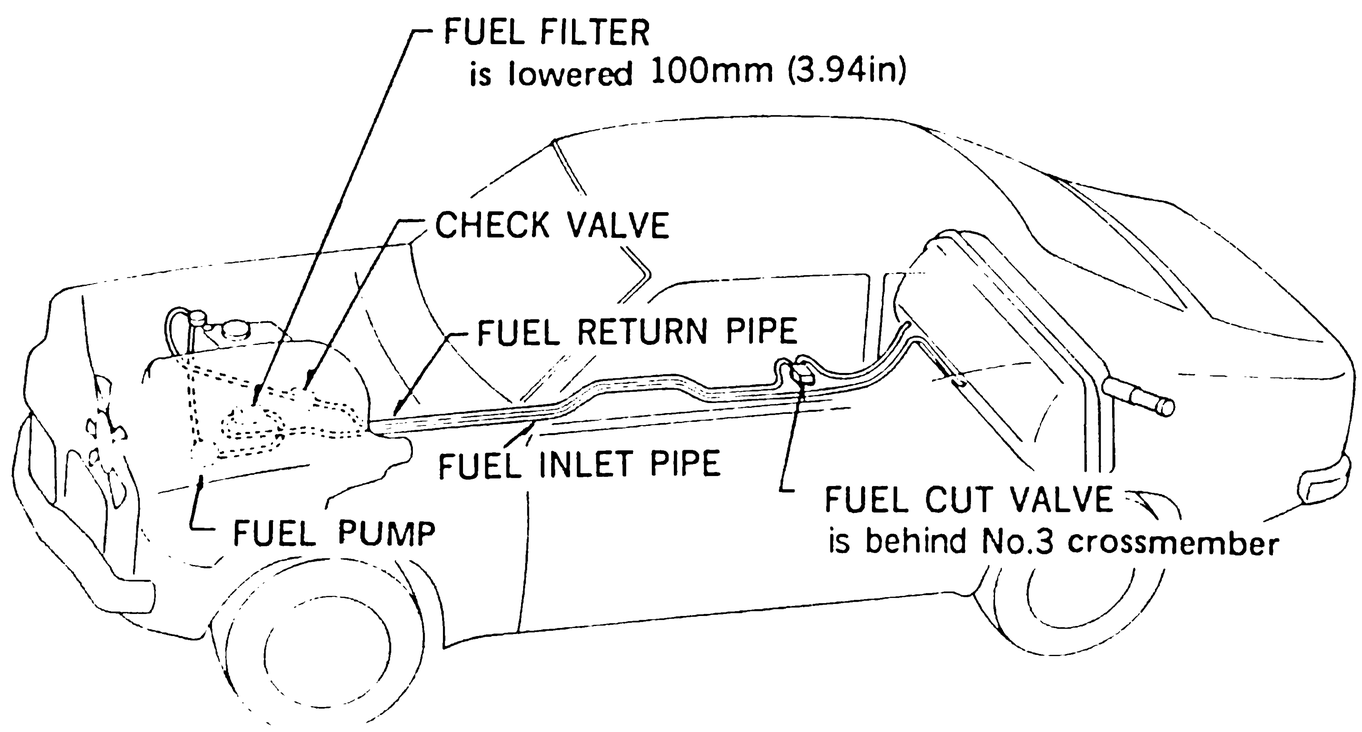

Fig. 6-5 Motor vehicle safety system

Toyo Kogyo Co.,Ltd.

©1976 Printed in Japan

3020-10-76H LE-FUC