parts catalog

Mazda RX-5 & 121 (R.H.D.)

(First Revised Edition)

Automobiles

mazda

13 IN. MANIFOLD & THERMAL REACTOR (ROTARY)

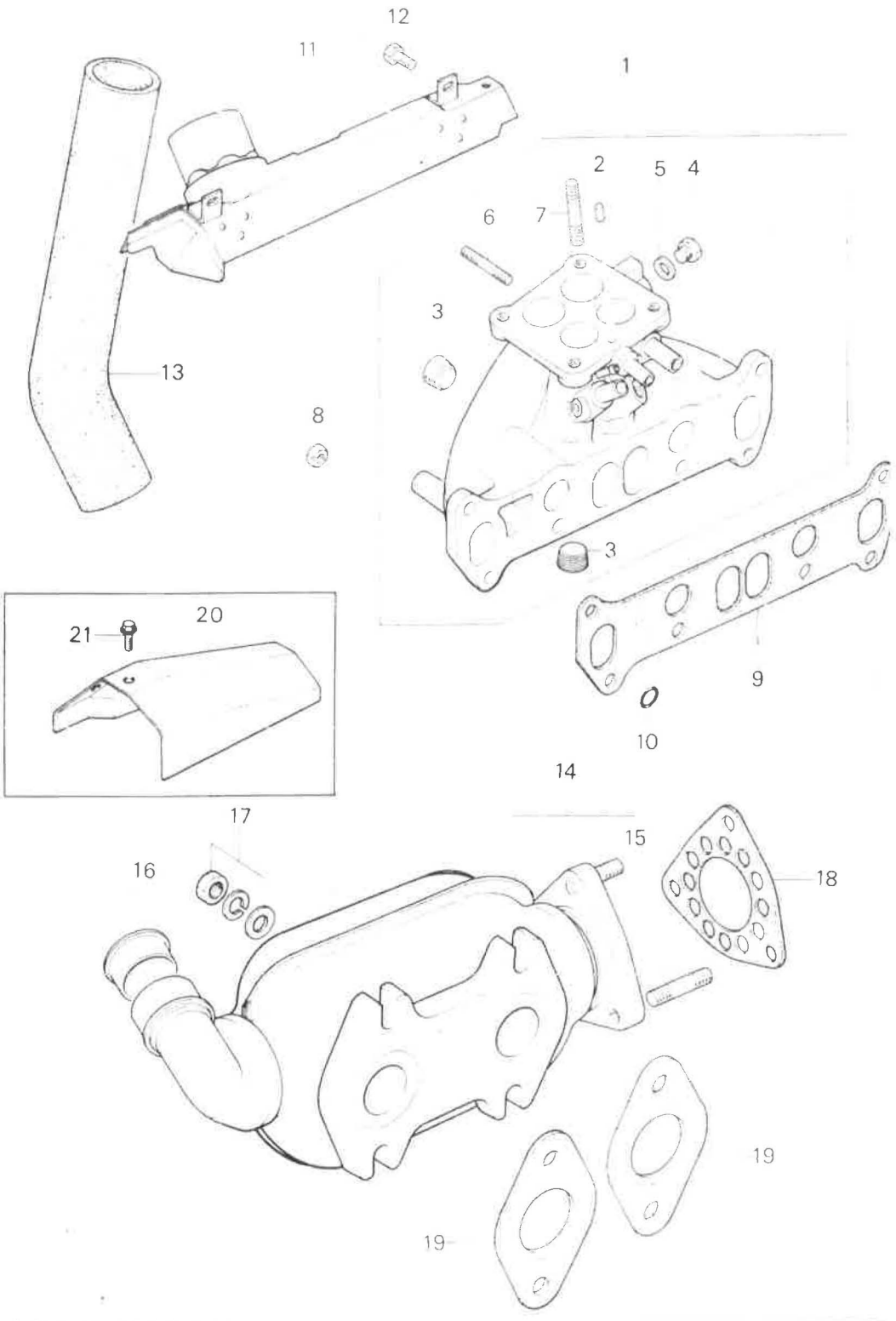

IN. MANIFOLD & THERMAL REACTOR (ROTARY)

13

No.	Part Number	Description	Q'ty	Remarks
1	3565 13 100B	Manifold, IN.	1	
•	3565 13 100C	Manifold, IN.	1	76/6 ~ ○
2	99307 1000	Plug, Blind	1	
3	99503 3000	Plug	2	
4	99511 1000	Plug	1	
5	99504 1000	Gasket	1	
6	99851 0622A	Stud, Air Control Valve	3	
7	99851 0830A	Stud, Carburettor	4	
8	99940 0801	Nut, IN. Manifold	6	
9	1757 13 111A	Gasket, IN. Manifold	1	
10	99541 0240	Ring, "O"-IN. Manifold	2	
11	3565 13 330A	Duct, Hot Air	1	
12	99796 0812	Bolt, Hot Air Duct	2	
13	1757 13 341A	Hose, Hot Air	1	
14	3567 13 800A	Reactor, Thermal	1	
15	2329 13 876	Stud	3	
16	2090 13 742B	Insert	1	

13 IN. MANIFOLD & THERMAL REACTOR (ROTARY)

No.	Part Number	Description	Q'ty	Remarks
17	2158 40 355	Nut, Thermal Reactor	4	
	0839 13 614	Washer, Plain	4	
	2329 13 882	Washer, Spring	4	
18	1757 13 889B	Gesket, Thermal Reactor	2	
19	1757 13 891	Gasket, Thermal Reactor	1	
20	1757 13 371B	Insulator, Heat	1	
21	99786 0616	Bolt, Heat Insulator	2	
	99952 0618	Washer, Plain	2	

13 23 AIR CLEANER (ROTARY)

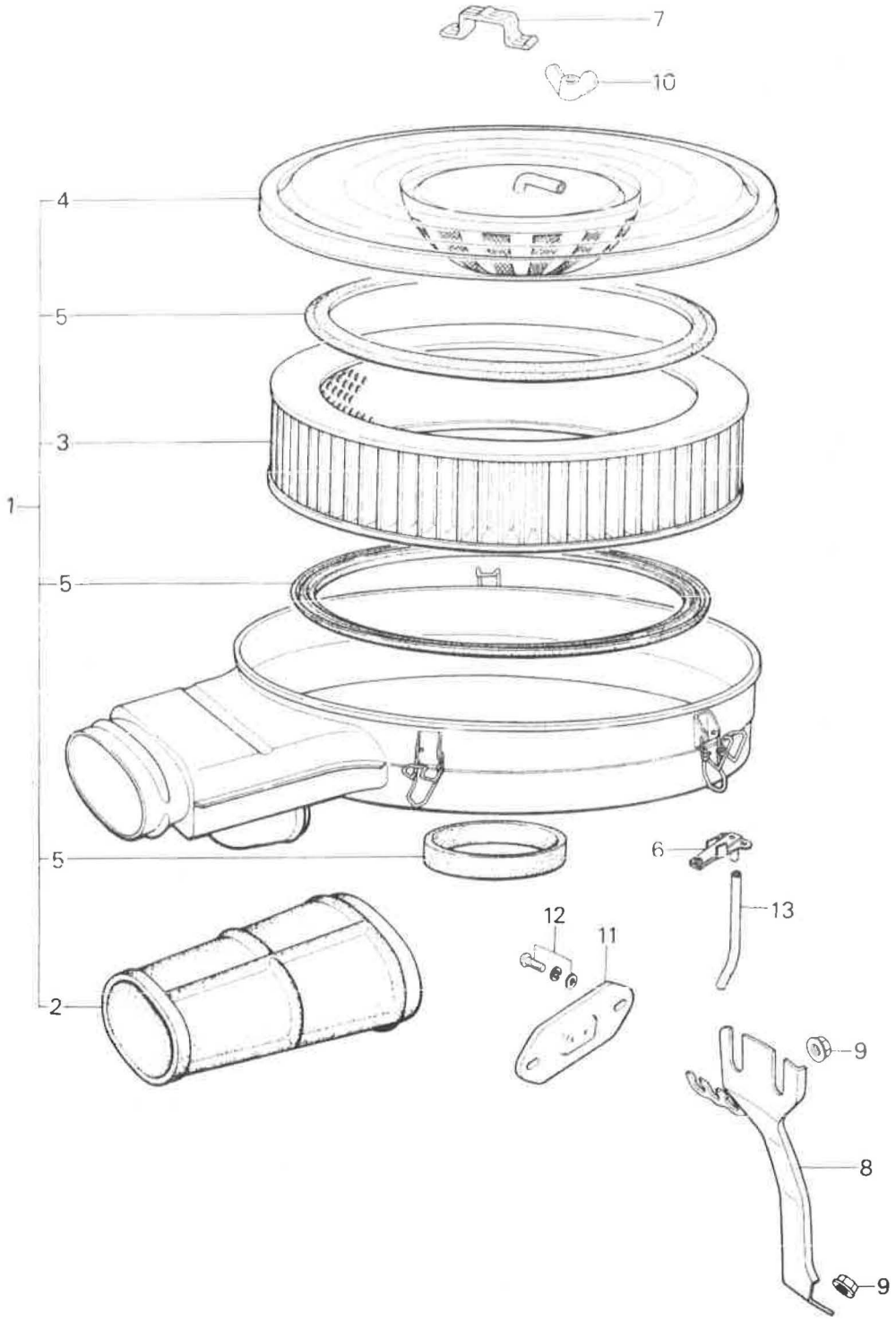

No.	Part Number	Description	Q'ty	Remarks
1	3597 13 300A	Cleaner, Air (General & Australia)	1	
•	3648 13 300B	Cleaner, Air (General & Australia)	1	76/10 ~ ○
	~~3593 13 300A~~	~~Cleaner, Air (British)~~	~~1~~	
•	3854 13 300A	Cleaner, Air (British)	1	
2	3597 13 351	Hose, Air-Fresh	1	
•	1757 13 351A	Hose, Air-Fresh	1	76/10 ~ ○
3	1757 23 672	Element	1	
4	3648 23 673	Cover (General & Australia)	1	
	1790 23 673A	Cover (British)	1	
5	1757 23 680	Gasket Set	1	
6	3648 23 693A	Compensator	1	
7	1617 13 305A	Clip, Pipe	1	
8	3648 13 310A	Supporter, Air Cleaner	1	
9	99940 0802	Nut, Air Cleaner	2	
10	99941 0801	Nut, Wing-Air Cleaner	1	
• 11	1010 13 365B	Plate, Blind	1	76/7 ~ Discarded
• 12	99786 0612	Bolt, Blind Plate	2	76/7 ~ Discarded
•	99952 0618	Washer, Plain	2	
13	99340 06230	Hose	1	

13 23 CARBURETTOR (ROTARY)

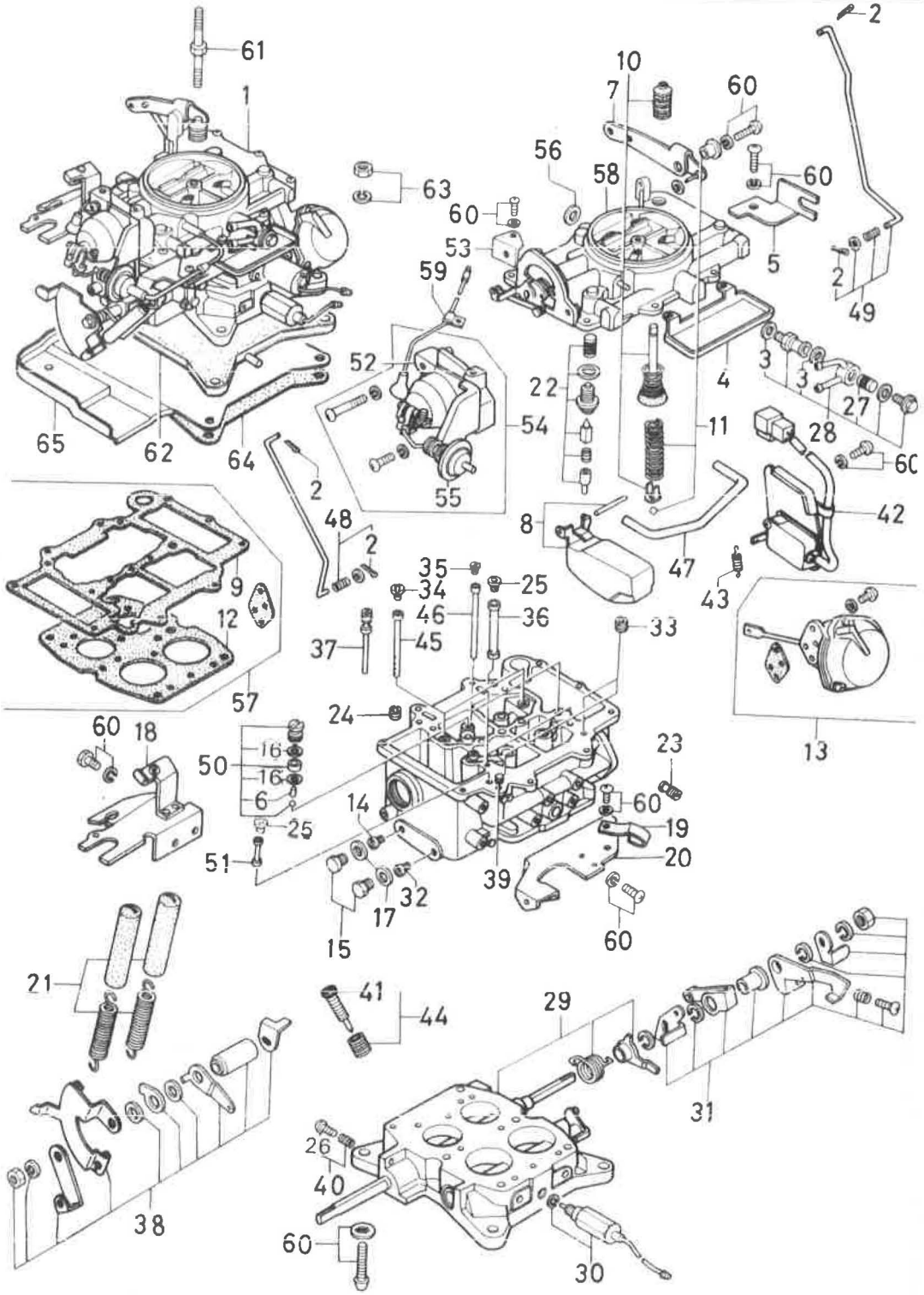

No.	Part Number	Description	Q'ty	Remarks
1	3591 13 200B	Carburettor (Manual)	1	
1	3592 13 200C	Carburettor (Automatic)	1	
2	0136 13 717A	Pin, Cotter	6	
3	0114 13 788A	Washer	2	
4	1757 23 318A	Tray, Fuel Return Valve	1	
5	1757 23 319	Bracket, Connector	1	
6	3648 23 324	Weight,	1	
7	3565 23 325	Lever, Pump	1	
8	3565 23 326	Float Set	2	
9	3565 23 327	Gasket, Float Chamber	1	
10	3565 23 331	Pump Set	1	
11	3565 23 332	Pump Set	1	
12	3565 23 349	Gasket, Trottle Chamber	1	
13	3593 23 350	Chamber Set, Diaphragm	1	
14	8501 23 353	Jet Set, Main (Manual)	1	
	3592 23 353	Jet Set, Main (Automatic)	1	
15	3565 23 354	Plug Set, Drain	1	
16	0187 23 356	Washer	2	
17	0291 23 366	Washer	5	
18	3648 23 370	Bracket, Throttle Wire	1	

No.	Part Number	Description	Q'ty	Remarks
19	3565 23 374	Clip, Vacuum Pip	1	
20	1202 23 375	Bracket,	1	
21	1029 23 380	Spring Set, Return	1	
22	3565 23 390	Valve Set, Needle	2	
23	3593 23 393	Jet, Vacuum	1	
24	3593 23 394	Jet, Slow Air Bleed	2	
25	1202 23 395	Jet, Air Bleed (Automatic)	2	
	3565 23 428	Jet, Air Bleed (Manual)	3	
26	3775 23 397	Screw, Throttle Adjust	1	
27	1757 23 401	Filter	1	
28	1757 23 409	Connector1	1	
29	3593 23 410	Flange Set (Manual)	1	
	3592 23 410	Flange Set (Automatic)	1	
30	1029 23 411	Valve, Solenoid (Manual)	1	
31	3648 23 420	Lever Set, Front (Manual)	1	
	3776 23 420	Lever Set, Front (Automatic)	1	
32	3593 23 422	Jet, Main	2	
33	3565 23 423	Jet, Slow Air Bleed	2	
34	3567 23 423	Jet, Slow Air Bleed	2	
35	3565 23 424	Jet, Slow Air Bleed	2	

No.	Part Number	Description	Q'ty	Remarks
36	3565 23 426	Jet, Slow	2	
37	3648 23 427	Jet, Slow (Manual)	2	
	3565 23 427	Jet, Slow (Automatic)	2	
38	3592 23 430	Lever Set, Rear	1	
39	1757 23 433	Jet Set (Manual)	1	
40	3775 23 440	Screw Set, Throttle Adjust	1	
41	3565 23 446	Screw Idle Adjust	1	
42	1757 23 450	Switch Set, (Manual)	1	
43	1757 23 455	Return Sp. Switch Set (Manual)	1	
44	3565 23 460	Screw Set Idle Adjust	1	
45	3648 23 461	Tube, Emulsion	2	
46	3565 23 462	Tube, Emulsion	2	
47	3565 23 464	Pipe, Rubber	1	
48	1029 23 480	Rod Set, Choke	1	
49	1757 23 481	Rod, Pump	1	
50	1757 23 490	Nozzle Set, Accel	1	
51	8501 23 491	Jet, Recher (Manual)	1	
52	3565 23 495	Holder, Pipe	1	
53	3565 23 496	Stopper, Choke Rod	1	
54	3593 23 500	Choke Set, Semi Auto	1	
55	3565 23 501	Piston, Choke	1	

13 23 CARBURETTOR (ROTARY)

No.	Part Number	Description		Q'ty	Remarks
56	3565 23 508	Washer		1	
57	3565 23 510	Gasket Set (Manual)		1	
	3567 23 510	Gasket Set (Automatic)		1	
58	3775 23 520	Horn Set, Air		1	
59	3565 23 549	Stopper, Lead Wire		1	
60	3565 23 652	Screw & Washer Set		1	
	3565 23 540A	Repair Kit, Carburettor		1	
61	1757 13 201A	Bolt, Air Cleaner		1	
62	3775 13 220	Insulator		1	
63	99901 0800	Nut, Carburettor		4	
	99971 0800	Washer, Carburettor		4	
64	1757 13 221	Gasket, Tray		1	76/4 ~ Added Anew
65	8527 13 321A	Tray, Carburettor		1	76/4 ~ Added Anew
	8527 13 321B	Tray, Carburettor	Australia	1	76/5 ~ △
	8527 13 321C	Tray, Carburettor	Australia	1	76/6 ~ △

13 FUEL PIPING (ROTARY)

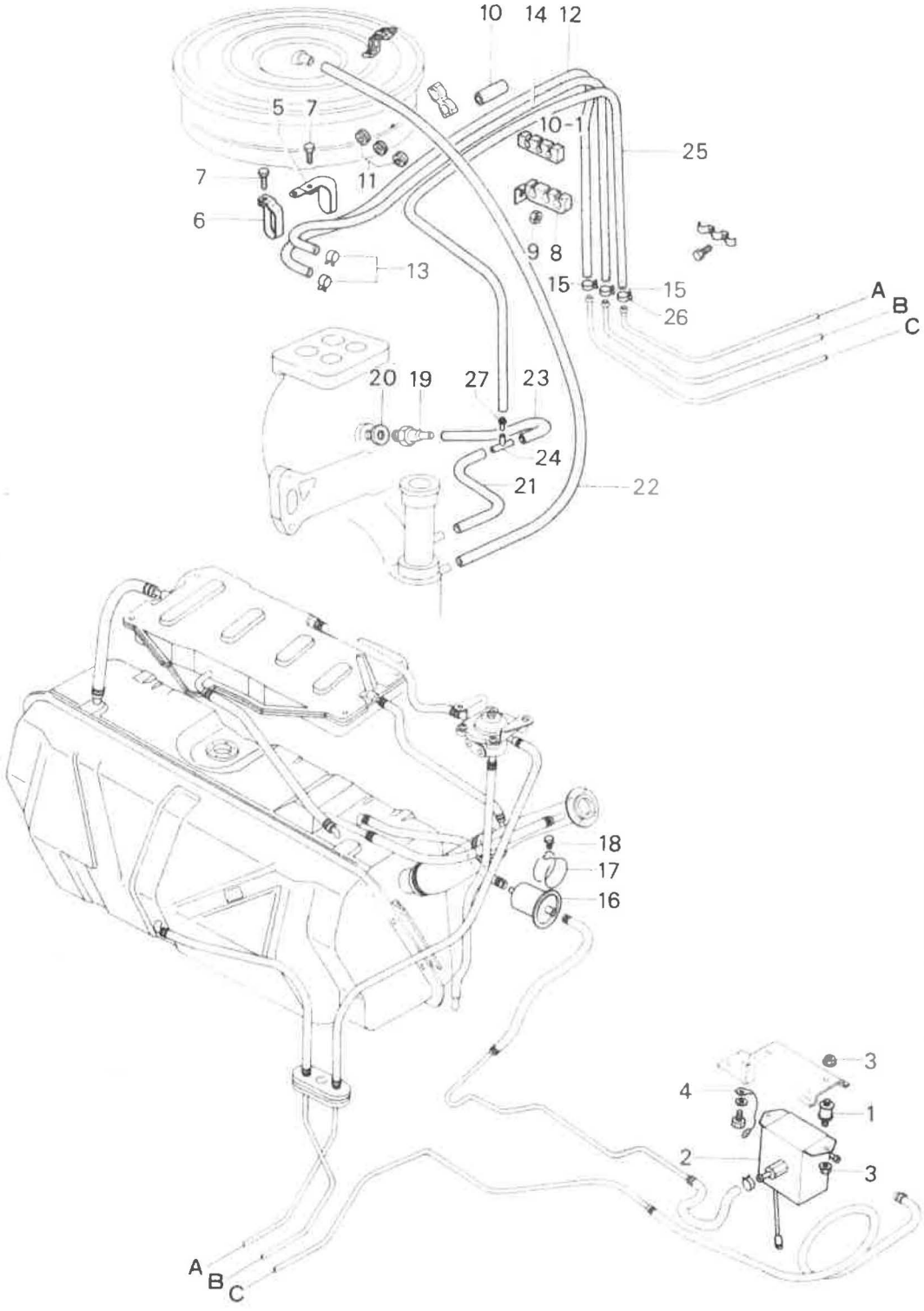

No.	Part Number	Description	Q'ty	Remarks
1	0223 13 363	Rubber, Insulation-Fuel Pump	2	
2	1757 13 400C	Pump, Fuel	1	
	1854 23 995	Repair Kit, Fuel Pump (Included in Fig. No. 2)	1	
3	99940 0600	Nut, Fuel Pump	4	
	99952 0600	Washer, Plain	1	
4	0866 13 402A	Wire, Earth	1	
•	0866 13 402B	Wire, Earth	1	76/7 ~ ○
5	1757 13 445	Clip, Fuel Hose	1	
6	1757 13 446	Clip, Fuel Hose	1	
7	99796 0610	Bolt, Clip	2	
8	1757 13 447	Clip, Fuel & Evaporation Hose	2	
9	99940 0600	Nut, Clip	1	
10	1883 13 448	Protector	1	
10-1	1757 13 449	Protector	1	
11	99681 1530	Protector, Fuel Pipe	1	
12	99348 08880	Hose, Fuel Main (ℓ=880)	1	Ord. By 99349 08750
13	99283 1200	Clip, Hose	2	
14	99348 06880	Hose, Fuel Return (ℓ=880)	1	Ord. By 99349 06750
15	99283 1000	Clip, Hose	2	

FUEL PIPING (ROTARY)

No.	Part Number	Description		Q'ty	Remarks
16	0222 13 470B	Filter, Fuel		1	
17	0381 13 481	Clamp, Fuel Filter		1	
18	99768 0616	Bolt, Fuel Clamp		1	
	99952 0618	Washer, Plain		1	
19	1757 13 780	Valve, Ventilation		1	
20	99564 1600	Gasket, Ventilation Valve		1	
21	3565 13 785	Hose, Ventilation-"T" Joint~ Oil Filler Pipe		1	(General & Australia)
	1790 13 785B	Hose, Ventilation-"T" Joint~ Oil Filler Pipe		1	(British)
22	1757 13 786B	Hose, Ventilation-Air Cleaner~ Intermediate Housing		1	
●23	3565 13 788	Hose, Ventilation-"T" Joint~	Except (British)	1	
●	3565 13 788A	Evaporation Pipe		1	76/11 ~ ○
●24	1757 13 790	Joint, "T"		1	
●25	1757 13 792A	Hose, Evaporation-"T" Joint~ Evaporation Pipe		1	
●26	99283 1000	Clip, Evaporation Hose		1	
●27	3565 13 795	Insert, "T" Joint		2	