SECTION NAME INDEX (CHASSIS)

LO.NO	SEC.NO	SECTION NAME
1-C11	2505	REAR PROPELLER SHAFT
1-D11	2550	REAR DRIVE SHAFT
1-E11	2600	REAR AXLE
1-F11	2610	REAR BRAKE MECHANISMS
1-H11	2710	REAR DIFFERENTIALS (NORMAL DIFF.)
1-L11	2710 A	REAR DIFFERENTIALS (LIMITED SLIP DIFF.)
1-D12	2800	REAR SUSPENSION MECHANISMS
1-E12	2801	REAR SPRING & DAMPER
1-F12	2810	REAR STABILIZER
1-G12	2830	REAR LOWER ARMS & SUB FRAME
1-I12	3200	STEERING WHEEL
1-L12	3210	STEERING COLUMN & SHAFTS
1-M12	3220	STEERING GEAR (W/O POWER STEERING)
1-C13	3220 A	STEERING GEAR (W/ POWER STEERING)
1-F13	3240	POWER STEERING SYSTEM
1-H13	3300	FRONT AXLE
1-I13	3310	FRONT BRAKE MECHANISMS
1-K13	3400	FRONT SUSPENSION MECHANISMS
1-M13	3401	FRONT SPRING & DAMPER
1-N13	3410	CROSSMEMBER & STABILIZER
1-C14	3700	TIRES & JACK
1-C15	3900	ENGINE & T/MISSION MOUNTINGS
1-D15	4000	EXHAUST SYSTEM
1-F15	4140	CLUTCH RELEASE & MASTER CYLINDERS (MANUAL TRANSMISSION)
1-G15	4145	CLUTCH PIPINGS (MANUAL TRANSMISSION)
1-H15	4160	ACCELERATOR CONTROL SYSTEM
1-I15	4200	FUEL TANK
1-M15	4300	CLUTCH & BRAKE PEDALS (MANUAL TRANSMISSION)
1-D16	4300A	BRAKE PEDALS (AUTOMATIC TRANSMISSION)
1-F16	4340	BRAKE MASTER CYLINDER & POWER BRAKE
1-H16	4360	BRAKE PIPINGS
1-J16	4400	PARKING BRAKE SYSTEM
1-L16	4500	FUEL PIPINGS
2-C03	4600	CHANGE CONTROL SYSTEM (AT)



CATLOG-NO= AUNA01-07

DATE. 1992-02

2505 -1 ※ REAR PROPELLER SHAFT

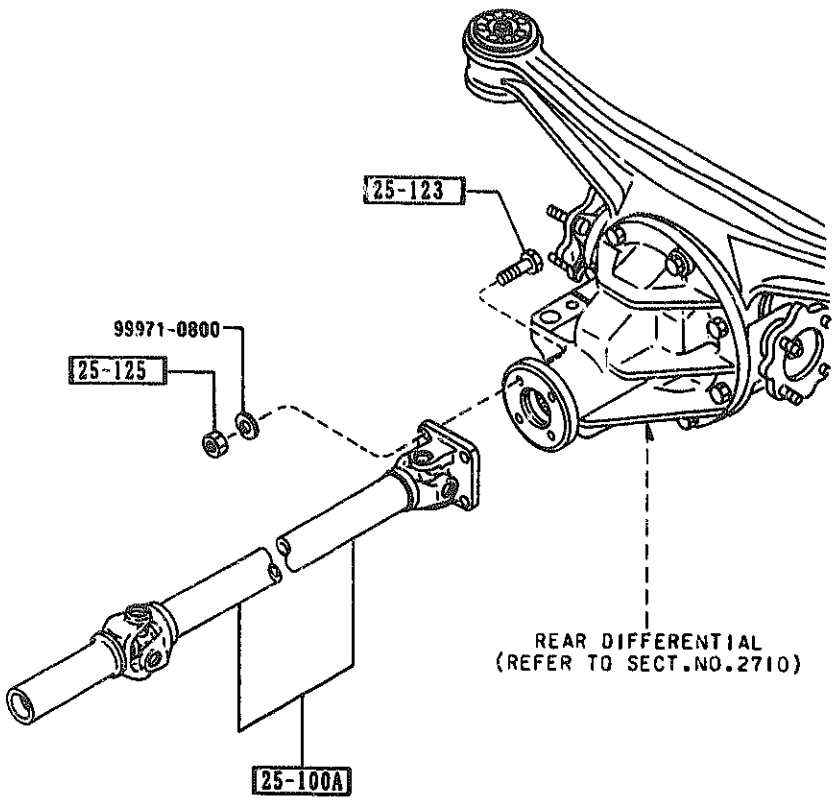

PART NO.	QTY	MODEL/RESTRICTION	MODEL/RESTRICTION	MODEL/RESTRICTION	FROM-TO
25-100A		SHAFT,PROPELLER			
M091-25-100	1				
25-123		BOLT			
ND10-25-123	4				
25-125		NUT			
1456-25-125	4				

2550 -1 M REAR DRIVE SHAFT

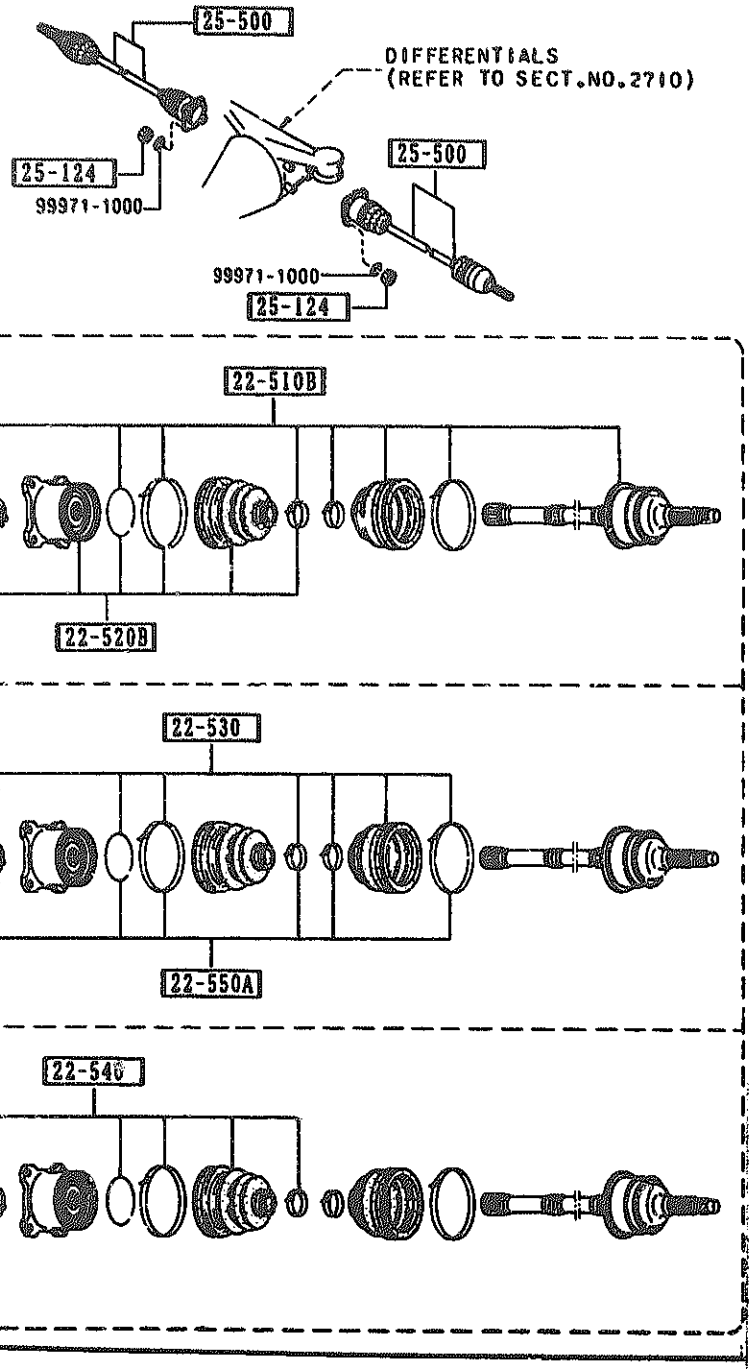

PART NO.	QTY	MODEL/RESTRICTION	MODEL/RESTRICTION	MODEL/RESTRICTION	FROM-TO
22-510B M090-22-510	2	JOINT SET,OUTER			
22-520B M090-22-520	2	JOINT SET(R),INNER			
22-530 M090-22-530	2	BOOT SET,OUTER JOINT			
22-540 M090-22-540	2	BOOT SET,INNER JOINT			
22-550A M090-22-550	2	CLIP SET,DRIVE SHAFT			
25-124 1368-25-124	8	NUT			
25-500 M090-25-500	2	SHAFT,DRIVE			

2600 -1 M REAR AXLE

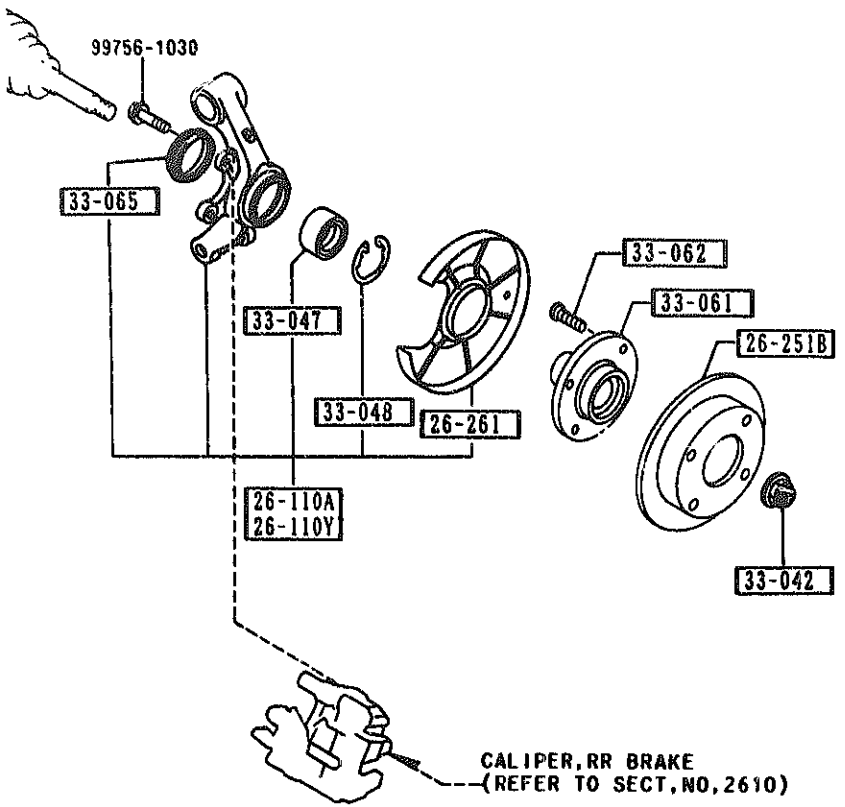

PART NO.	QTY	MODEL/RESTRICTION	MODEL/RESTRICTION	MODEL/RESTRICTION	FROM-TO
26-110A		KNUCKLE(R),REAR			
NA01-26-130 A (NA01-26-130A)	1				-9901
NA01-26-130A	1				9901-
26-110Y		KNUCKLE(L),REAR			
NA01-26-140 A (NA01-26-140A)	1				-9901
NA01-26-140A	1				9901-
26-251B		PLATE,DISC			
*NA01-26-251A	2				
26-261		COVER,DUST			
NA01-26-261 A (NA01-26-261A)	2				-9901
NA01-26-261A	2				9901-
33-042		NUT			
NA01-33-042A	2	W/WASHER			
33-047		BEARING,WHEEL			
B455-33-047A	2				
33-048		RING,RETAINING-DISC PLATE			
H260-33-048	2				
33-061		HUB,WHEEL			
B455-33-061	2				
33-062		BOLT,HUB			
B455-33-062	8				
33-065		SEAL,OIL-AXLE			
G304-33-065	2				

9901 NA35**-119257

2610 -1 REAR BRAKE MECHANISMS

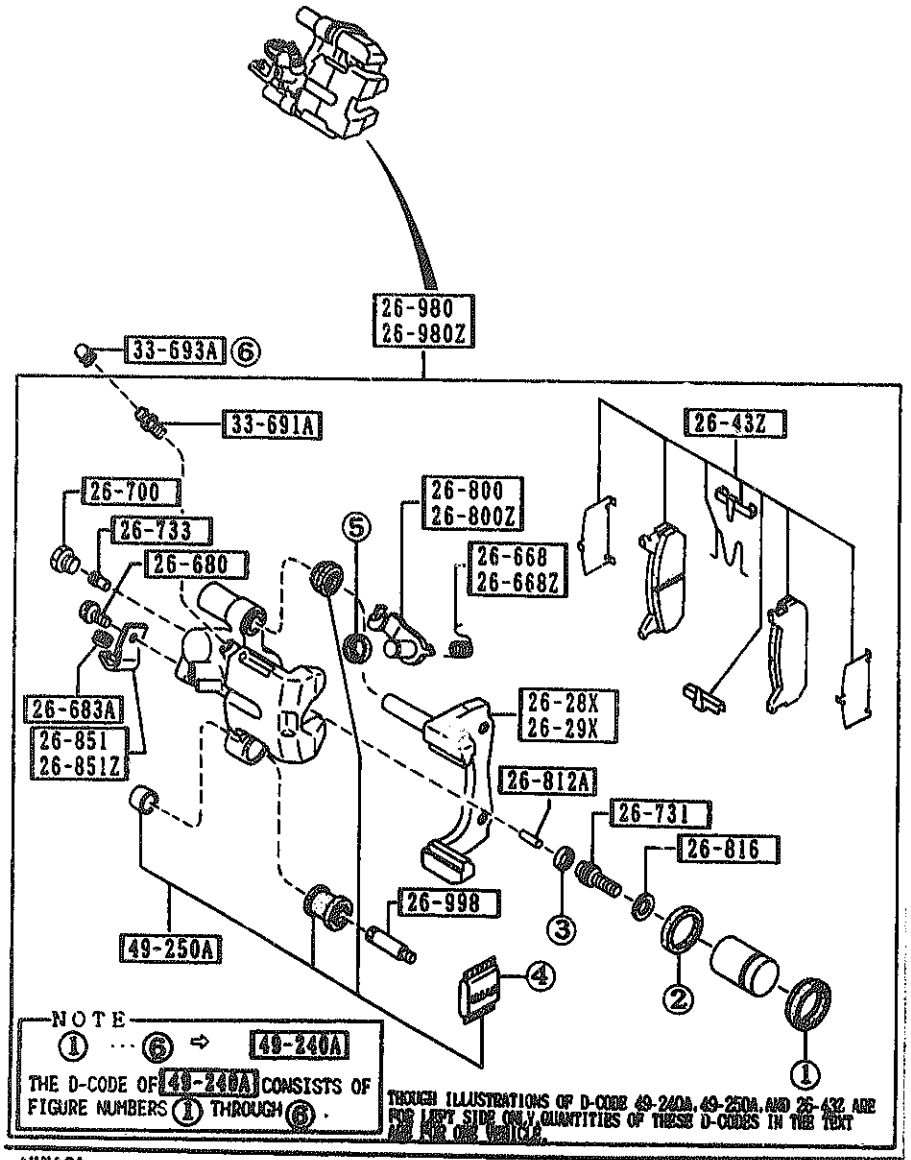

AUNA01

PART NO.	QTY	MODEL/RESTRICTION	MODEL/RESTRICTION	MODEL/RESTRICTION	FROM-TO
26-28X		SUPPORT(R),MOUNTING			
NA10-26-28X	1				
26-29X		SUPPORT(L),MOUNTING			
NA10-26-29X	1				
26-43Z		PAD SET,RR CALIPER			
NAY1-26-43Z	1	ASBESTOS			
26-668		SPRING(R),LEVER			
BW0H-26-668	1				
26-668Z		SPRING(L),LEVER			
BW0H-26-669	1				
26-680		BOLT			
BW0H-26-680	2				
26-683A		PROTECTOR			
BW0H-26-683	2				
26-700		PLUG,SCREW			
BW0H-26-700	2				
26-731		SPINDLE,ADJUSTER			
BW0H-26-731	2				
26-733		GEAR,ADJUST			
BW0H-26-733	2				
26-800		LEVER(R),OPERATING			
BW0H-26-800	1				
26-800Z		LEVER(L),OPERATING			
BW0H-26-810	1				
26-812A		ROD,PUSH-FRT CALIPER			
BW0H-26-812	2				
26-816		RING,SNAP-RR CALIPER			

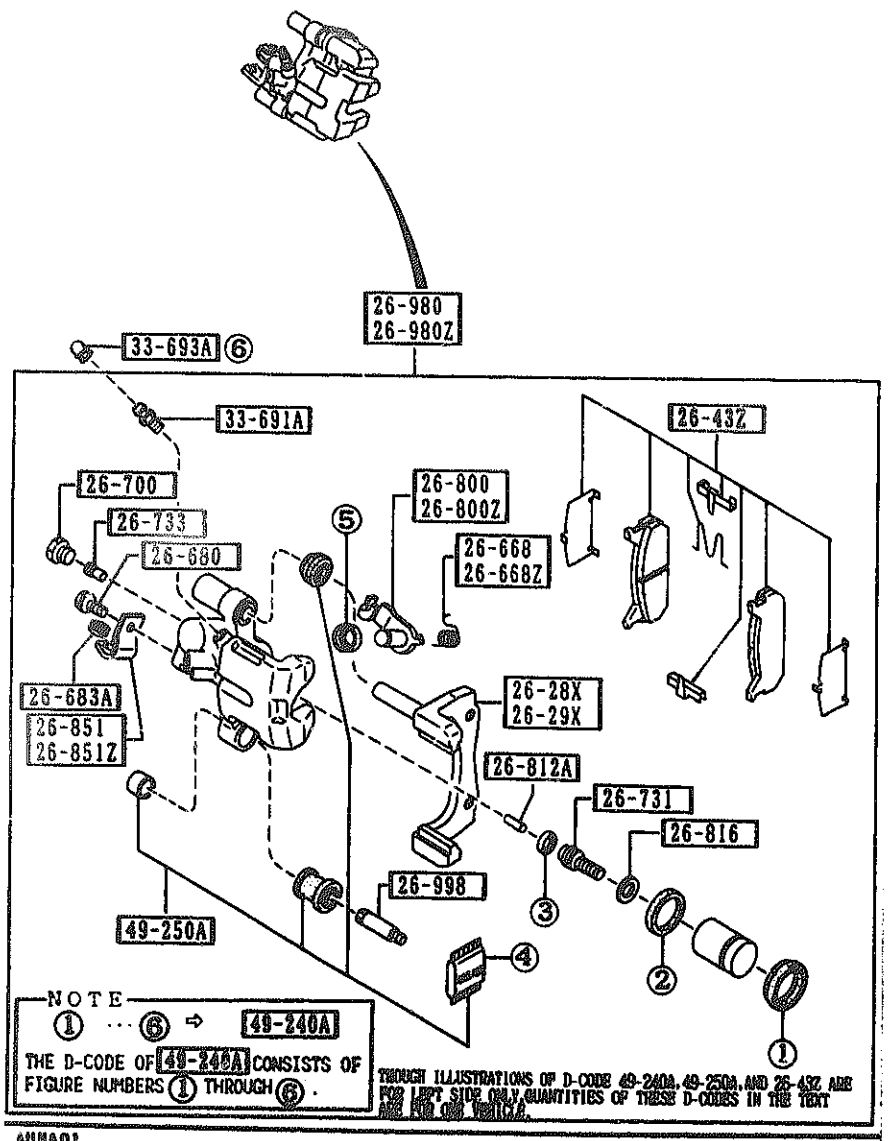

AUMA01

PART NO.	QTY	MODEL/RESTRICTION	MODEL/RESTRICTION	MODEL/RESTRICTION	FROM-TO
CONT'D					
BW0H-26-816	2				
26-851		BRACKET(R),CABLE			
BW0H-26-851	1				
26-851Z		BRACKET(L),CABLE			
BW0H-26-861	1				
26-980		CALIPER(R),RR BRAKE			
NA01-26-980A	1				
26-980Z		CALIPER(L),RR BRAKE			
NA01-26-990A	1				
26-998		PIN,GUIDE			
BW0H-26-998A	2				
33-691A		SCREW,BLEEDER			
BW0H-26-691	2				
33-693A		CAP,BLEEDER SCREW			
0259-33-693	2				
49-240A		SEAL KIT,CALIPER-RR			
NAY1-26-44Z	1				
49-250A		BOOT KIT,RR CALIPER			
BWYH-26-45Z	1				

CAT. AUMA01-07

1992-02

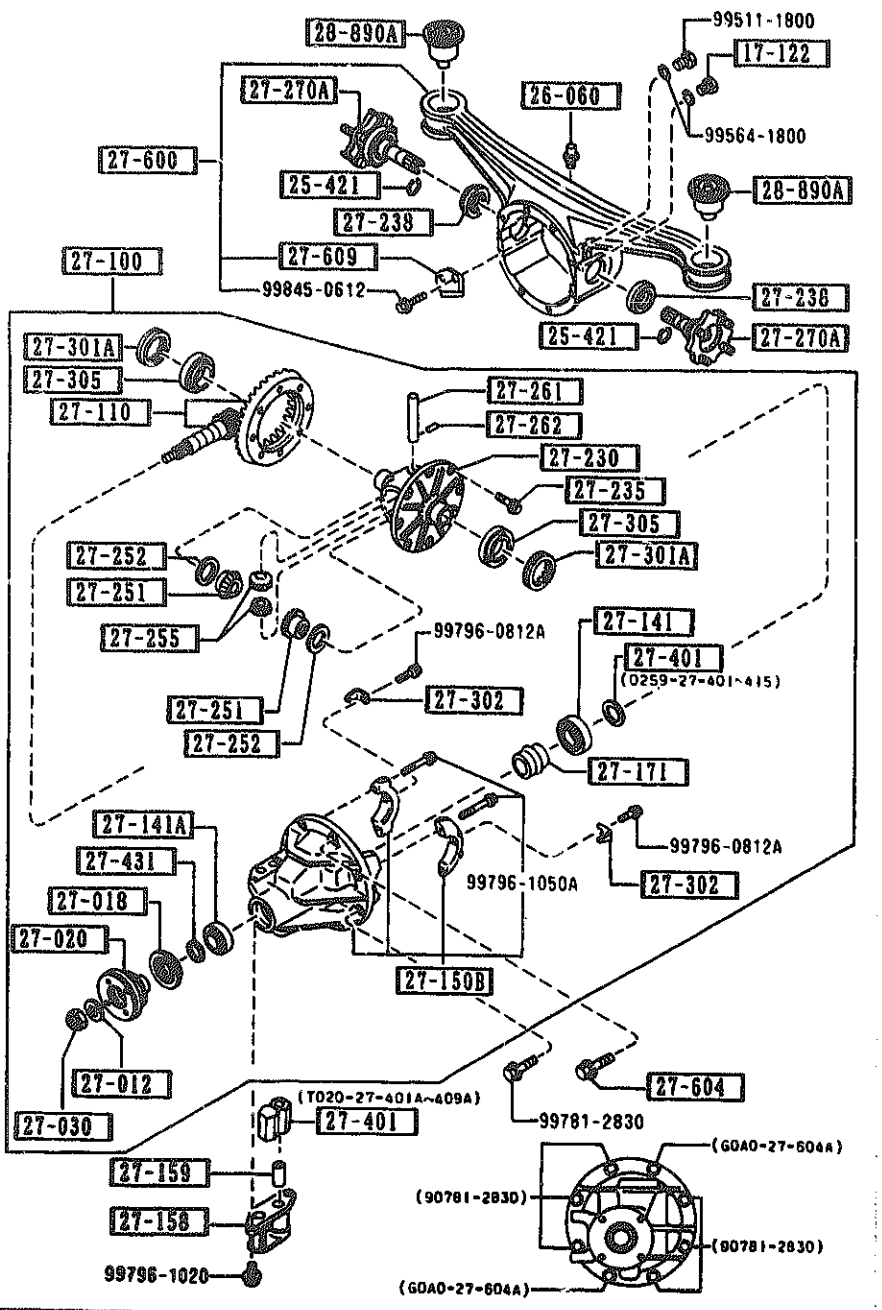

AUNA01

PART NO.	QTY	MODEL/RESTRICTION	MODEL/RESTRICTION	MODEL/RESTRICTION	FROM-TO
17-122		PLUG,MAGNET			
0810-17-121	1				
25-421		CLIP			
F001-25-421A	2				
26-060		BREATHER			
0730-26-060	1				
27-012		WASHER			
3919-27-012	1				
27-018		SEAL,OIL			
T020-27-165	1				
27-020		FLANGE,COMPANION			
T002-27-120A AN(T002-27-120B)	1				-9721
T002-27-120B	1				9721-
27-030		NUT,LOCK			
3919-27-130	1				
27-100		DRIVING & DIFF.			
T020-27-100H AN(T020-27-100J)	1				-9721
T020-27-100J A (T020-27-100K)	1				9721-9801
T020-27-100K	1				9801-
27-110		GEAR SET,FINAL			
T020-27-110B	1	R=4.300			
27-141		BEARING,PINION			
0755-27-210	1				
27-141A		BEARING,PINION			
3919-27-220	1				
27-150B		CARRIER,DIFFERTIAL-FRT			
T020-27-150C	1				-9801

9721 NA35##-114922
9801 NA35##-116316

CAT. AUNA01-07

1992-02

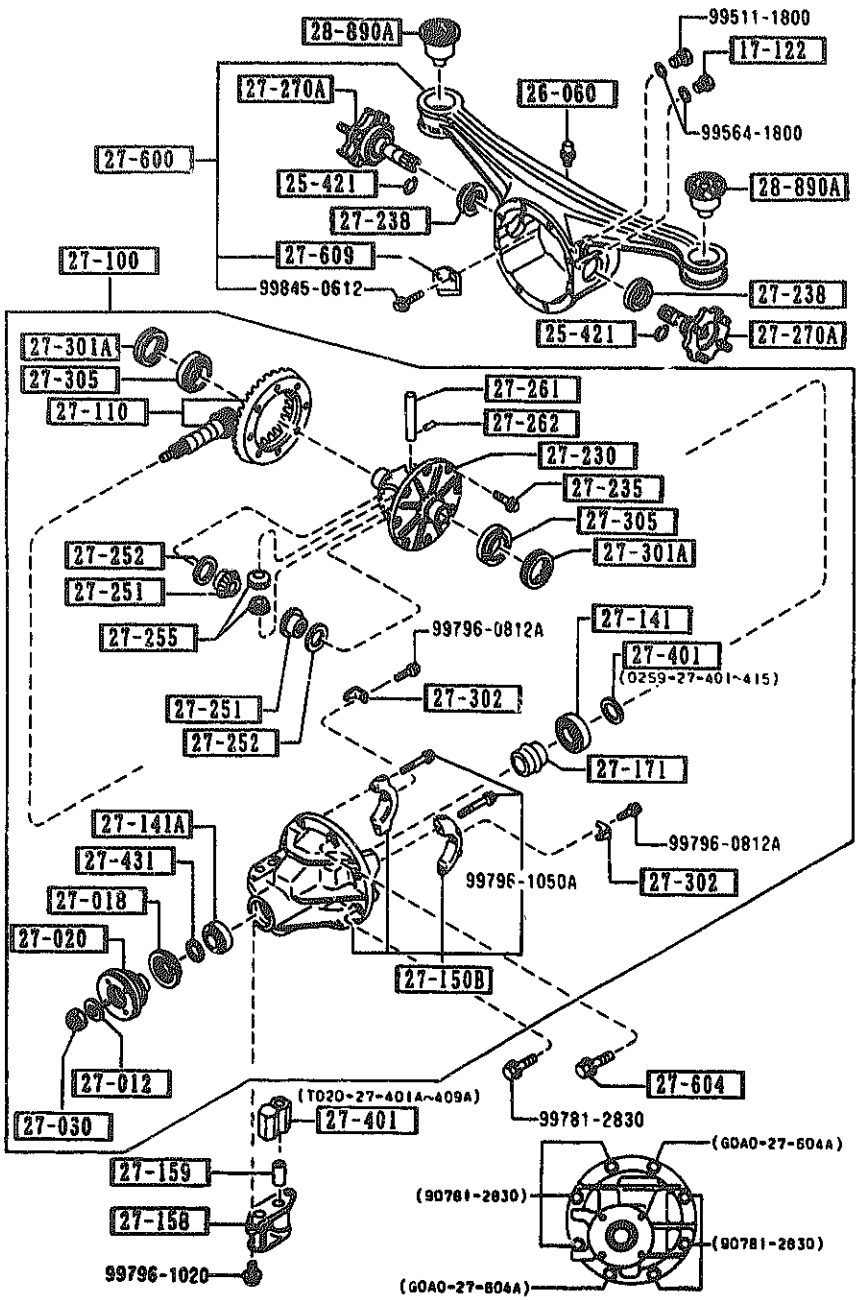

PART NO.	QTY	MODEL/RESTRICTION	MODEL/RESTRICTION	MODEL/RESTRICTION	FROM-TO
CONT'D A (T020-27-150D)					
T020-27-150D	1				9801-
27-158		SPACE			
T020-27-158A	1				
27-159		PIN,TUBULAR			
T020-27-159A	1				
27-171		PIECE,DISTANCE			
T020-27-171	1				
27-230		CASE			
T005-27-231	1				
27-235		BOLT,RING GEAR			
3919-27-235	8	D=10.2MM			
3919-27-236	8	D=10MM			
27-238		SEAL,OIL			
T020-27-238	2				
27-251		GEAR,DIFF.SIDE			
F035-27-251	2				
27-252		WASHER			
F001-27-252	2	T=2MM			
F001-27-253	2	T=2.1MM			
F001-27-254	2	T=2.2MM			
27-255		PINION,DIFFERENTIAL			
T020-27-255	2				
27-261		SHAFT,DIFF. PINION			
F001-27-261A	1				
27-262		PIN			

9801 NA35MM-116316

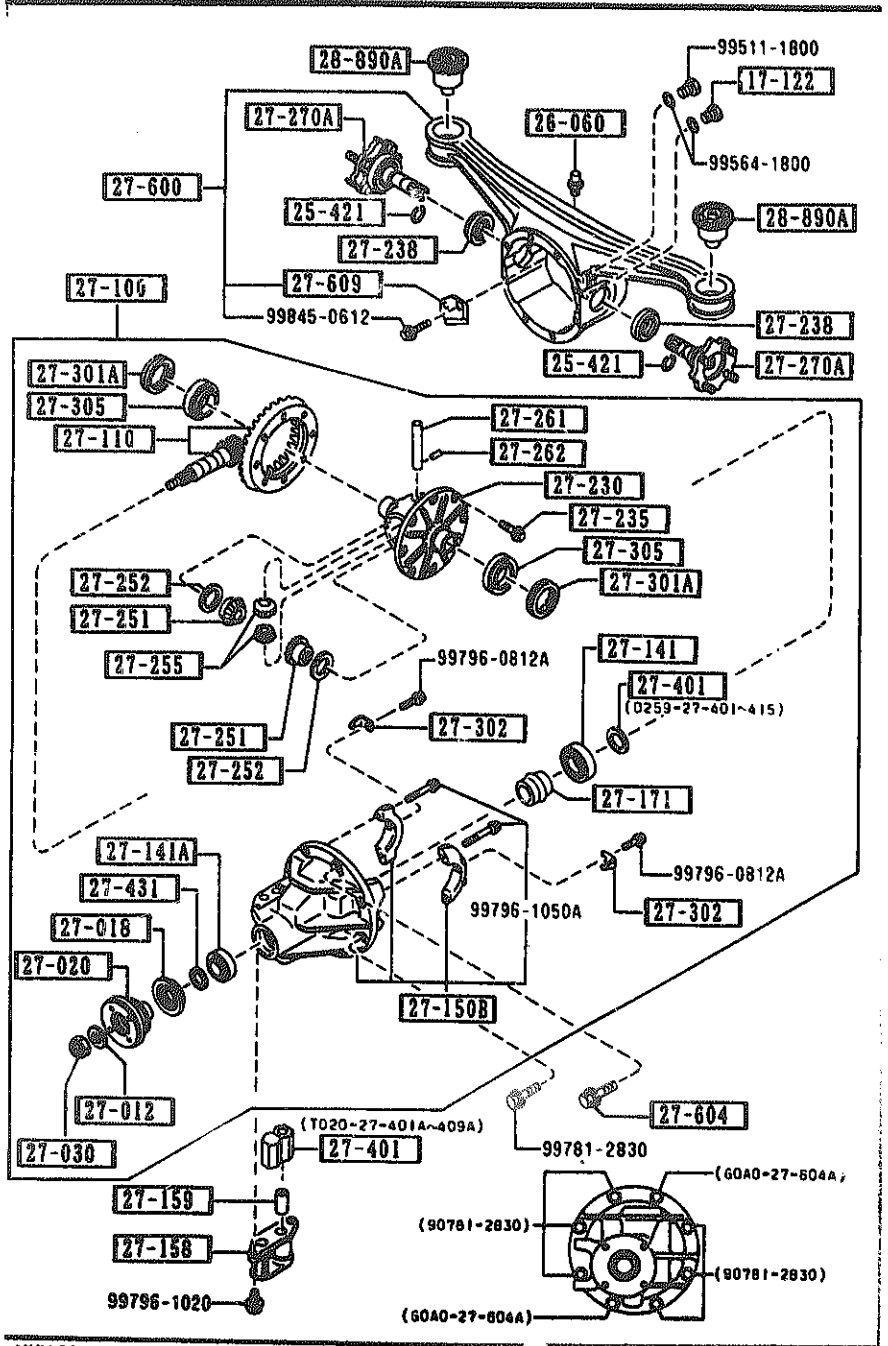

AUNA01

PART NO.	QTY	MODEL/RESTRICTION	MODEL/RESTRICTION	MODEL/RESTRICTION	FROM-TO
CONT'D					
0114-27-262	1				
+----------+					
| 27-270A |		SHAFT,OUT PUT			
+----------+					
T005-27-270B	2				
+----------+					
| 27-301A |		SCREW,ADJUST			
+----------+					
0180-27-301A	2				
+----------+					
| 27-302 |		PLATE,LOCK			
+----------+					
0290-27-302	2				
+----------+					
| 27-305 |		BEARING			
+----------+					
0249-27-350	2				
+----------+					
| 27-401 |		SPACER			
+----------+					
0259-27-401	1	T=3.08MM			
0259-27-402	1	T=3.11MM			
0259-27-403	1	T=3.14MM			
0259-27-404	1	T=3.17MM			
0259-27-405	1	T=3.2MM			
0259-27-406	1	T=3.23MM			
0259-27-407	1	T=3.26MM			
0259-27-408	1	T=3.29MM			
0259-27-409	1	T=3.32MM			
0259-27-411	1	T=3.35MM			
0259-27-412	1	T=3.38MM			
0259-27-413	1	T=3.41MM			
0259-27-414	1	T=3.44MM			
0259-27-415	1	T=3.47MM			
T020-27-401A		L=50.850			

CAT. AUNA01-07

1992-02

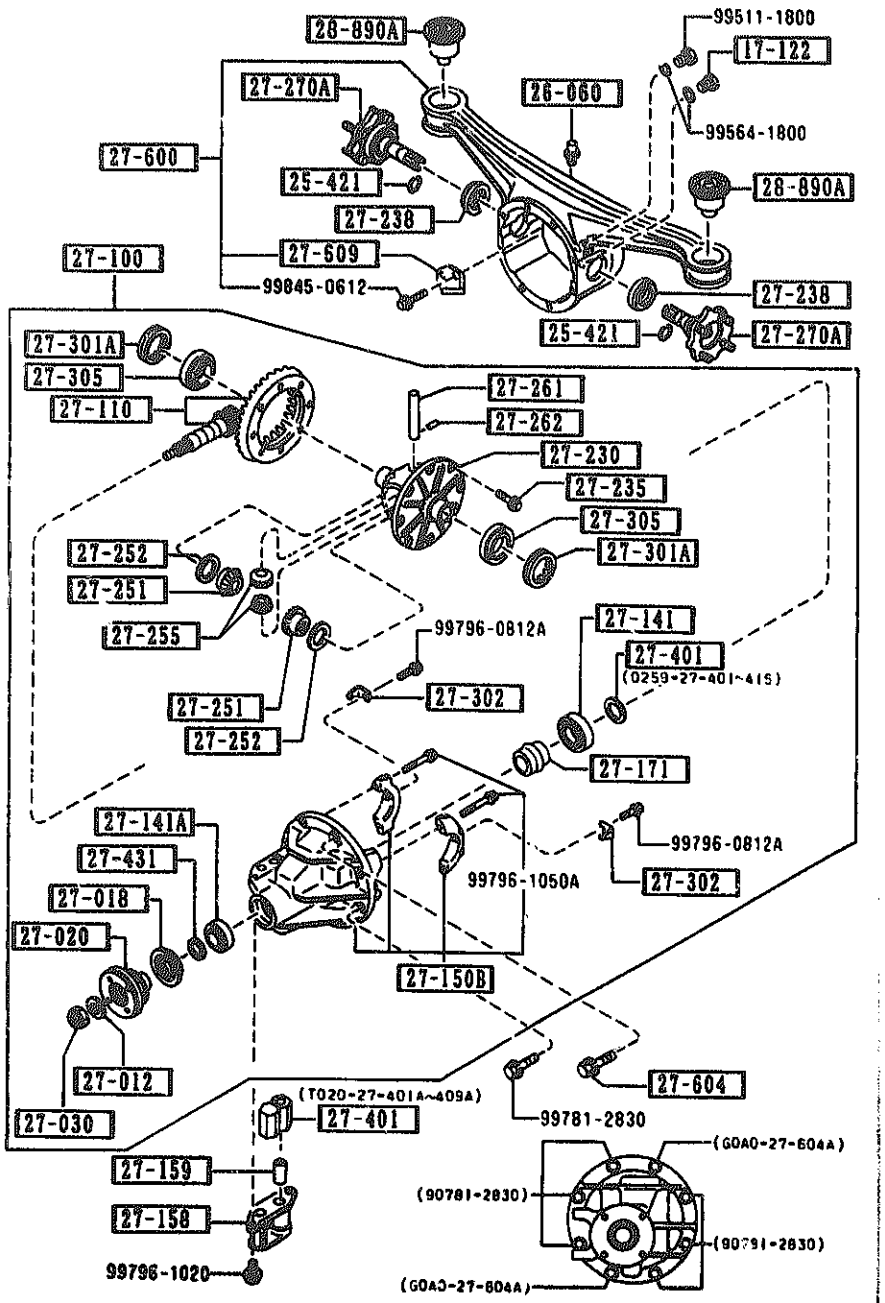

AUNA01

PART NO.	QTY	MODEL/RESTRICTION	MODEL/RESTRICTION	MODEL/RESTRICTION	FROM-TO
CONT'D					
	1				-0401
T020-27-402A	1	L=50.875			-0401
T020-27-403A	1	L=50.900			-0401
T020-27-404A	1	L=50.925			-0401
T020-27-405A	1	L=50.950			-0401
T020-27-406A	1	L=50.975			-0401
T020-27-407A	1	L=51.000			-0401
T020-27-408A	1	L=51.925			-0401
T020-27-409A	1	L=51.050			-0401
27-431		SPACER			
T001-27-431	1				
27-600		CASING,DIFFERNTIAL			
T020-27-600DA (T020-27-600E)	1				-9609
T020-27-600EA (T020-27-600F)	1				9609-9926
T020-27-600F	1				9926-
27-604		BOLT,CARRI[illegible]			
G0A0-27-604A	2				
27-609		PLATE,BAFFLE-DIFF CASING			
M0A1-27-609A	1				
28-890A		RUBBER,SUB FRAME MTG			
NA01-28-890	2				

9609 NA35##-108360
9926 NA35##-122890
0401 NA35##-146561

CAT. AUNA01-07

1992-02

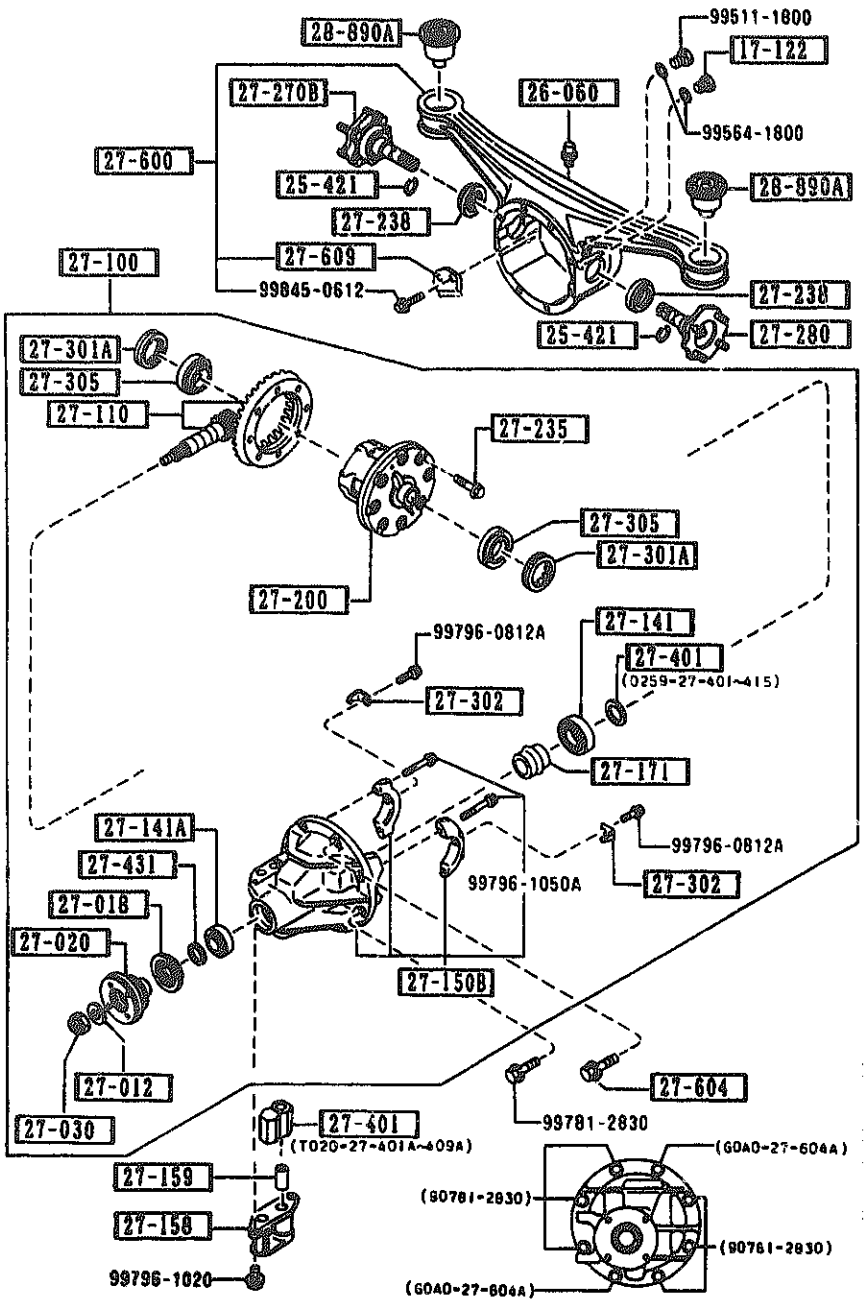

PART NO.	QTY	MODEL/RESTRICTION	MODEL/RESTRICTION	MODEL/RESTRICTION	FROM-TO
17-122		PLUG,MAGNET			
0810-17-121	1				
25-421		CLIP			
F001-25-421A	2				
26-060		BREATHER			
0730-26-060	1				
27-012		WASHER			
3919-27-012	1				
27-018		SEAL,OIL			
T020-27-165	1				
27-020		FLANGE,COMPANION			
T002-27-120A	1				-9721
AN(T002-27-120B)					
T002-27-120B	1				9721-
27-030		NUT,LOCK			
3919-27-130	1				
27-100		DRIVING & DIFF.			
T025-27-100F	1				-9405
A (T025-27-100G)					
T025-27-100G	1				9405-9721
AN(T025-27-100H)					
T025-27-100H	1				9721-9801
A (T025-27-100J)					
T025-27-100J	1				9801-
27-110		GEAR SET,FINAL			
T020-27-110B	1	R=4.300			
27-141		BEARING,PINION			
0755-27-210	1				
27-141A		BEARING,PINION			
3919-27-220	1				

9405 NA35##-100118
9721 NA35##-114922
9801 NA35##-116316

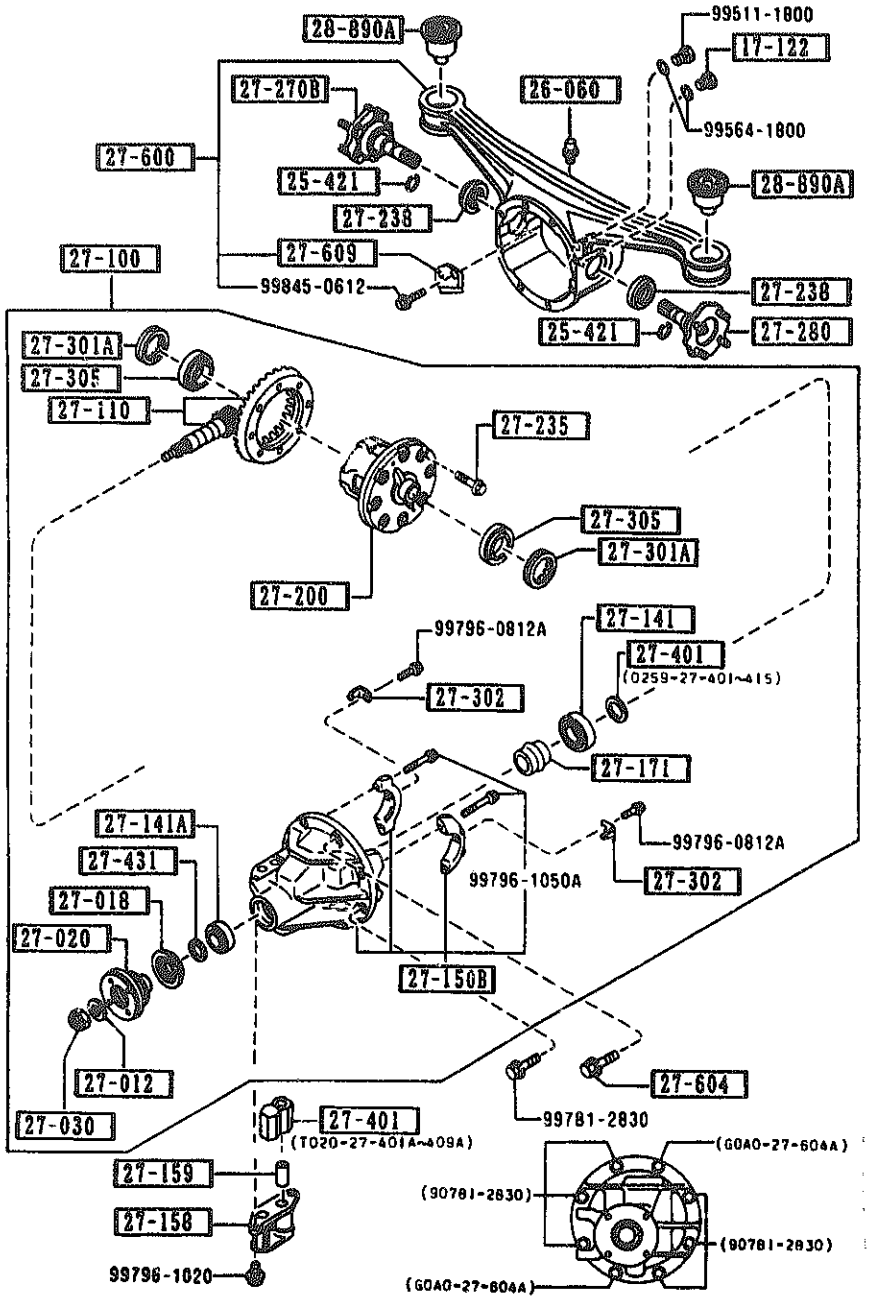

PART NO.	QTY	MODEL/RESTRICTION	MODEL/RESTRICTION	MODEL/RESTRICTION	FROM-TO
27-150B		CARRIER,DIFFERTIAL-FRT			
T020-27-150C	1				-9801
A (T020-27-150D)					
T020-27-150D	1				9801-
27-158		SPACE			
T020-27-158A	1				
27-159		PIN,TUBULAR			
T020-27-159A	1				
27-171		PIECE,DISTANCE			
T020-27-171	1				
27-200		DIFFERENTIAL			
T016-27-200A	1				-9405
A (T016-27-200B)					
T016-27-200B	1				9405-
27-235		BOLT,RING GEAR			
3919-27-235	8	D=10.2MM			
3919-27-236	8	D=10MM			
27-238		SEAL,OIL			
T020-27-238	2				
27-270B		SHAFT(R),OUTPUT			
T015-27-270	1				
27-280		SHAFT(L),OUTPUT			
T015-27-280	1				
27-301A		SCREW,ADJUST			
0180-27-301A	2				
27-302		PLATE,LOCK			
0290-27-302	2				
27-305		BEARING			
0249-27-350	2				

9405 NA35##-100118
9801 NA35##-116316

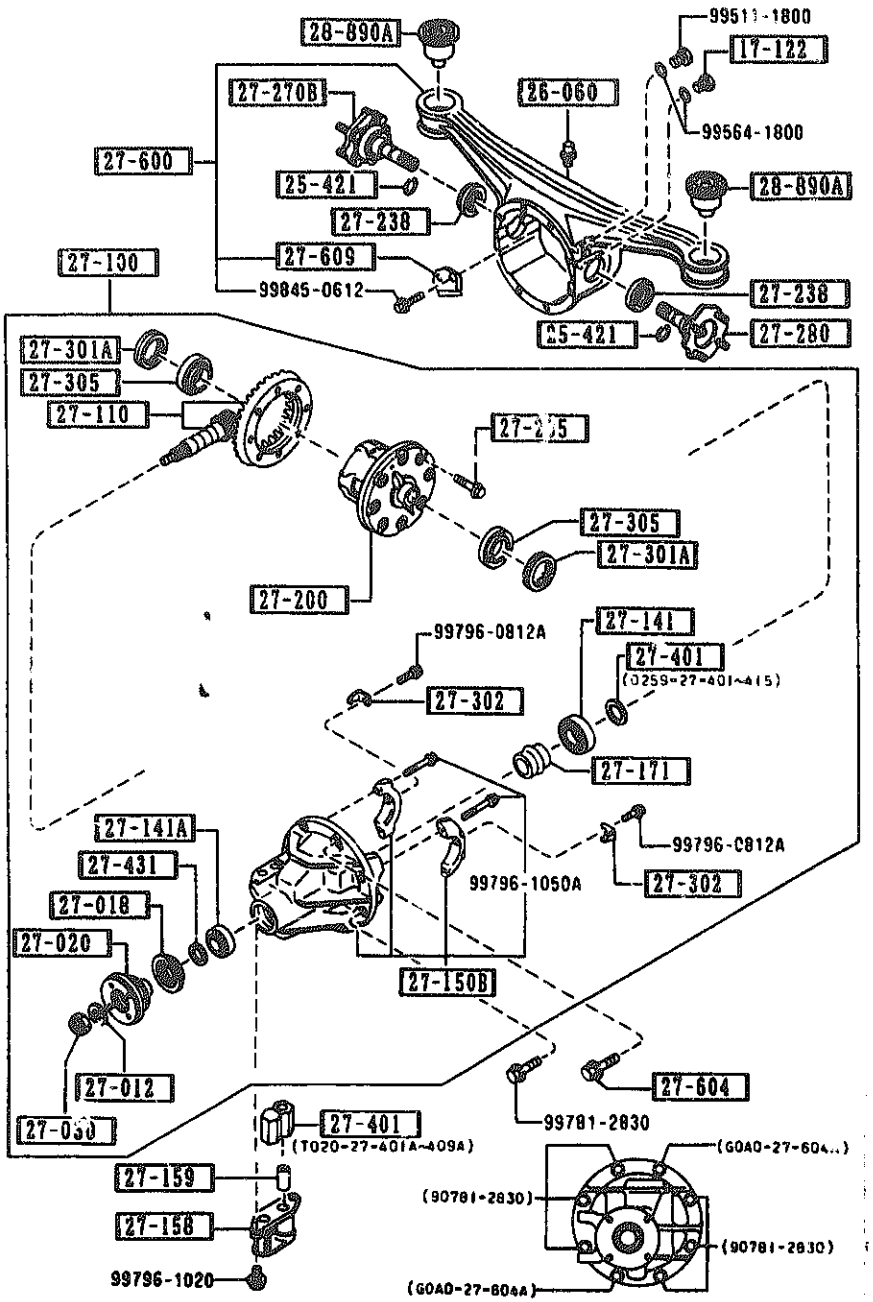

2710 A-3 REAR DIFFERENTIALS
(LIMITED SLIP DIFF.)

PART NO.	QTY	MODEL/RESTRICTION	MODEL/RESTRICTION	MODEL/RESTRICTION	FROM-TO
27-401		SPACER			
0259-27-401	1	T=3.08MM			
0259-27-402	1	T=3.11MM			
0259-27-403	1	T=3.14MM			
0259-27-404	1	T=3.17MM			
0259-27-405	1	T=3.2MM			
0259-27-406	1	T=3.23MM			
0259-27-407	1	T=3.26MM			
0259-27-408	1	T=3.29MM			
0259-27-409	1	T=3.32MM			
0259-27-411	1	T=3.35MM			
0259-27-412	1	T=3.38MM			
0259-27-413	1	T=3.41MM			
0259-27-414	1	T=3.44MM			
0259-27-415	1	T=3.47MM			
T020-27-401A	1	L=50.850			-0401
T020-27-402A	1	L=50.875			-0401
T020-27-403A	1	L=50.900			-0401
T020-27-404A	1	L=50.925			-0401
T020-27-405A	1	L=50.950			-0401
T020-27-406A	1	L=50.975			-0401
T020-27-407A	1	L=51.000			-0401
T020-27-408A	1	L=51.025			-0401

0401 NA35**-146561

SECTION NAME INDEX (CHASSIS)

LO.NO	SEC.NO	SECTION NAME
1-C11	2505	REAR PROPELLER SHAFT
1-D11	2550	REAR DRIVE SHAFT
1-E11	2600	REAR AXLE
1-F11	2610	REAR BRAKE MECHANISMS
1-H11	2710	REAR DIFFERENTIALS (NORMAL DIFF.)
1-L11	2710 A	REAR DIFFERENTIALS (LIMITED SLIP DIFF.)
1-D12	2800	REAR SUSPENSION MECHANISMS
1-E12	2801	REAR SPRING & DAMPER
1-F12	2810	REAR STABILIZER
1-G12	2830	REAR LOWER ARMS & SUB FRAME
1-I12	3200	STEERING WHEEL
1-L12	3210	STEERING COLUMN & SHAFTS
1-M12	3220	STEERING GEAR (W/O POWER STEERING)
1-C13	3220 A	STEERING GEAR (W/ POWER STEERING)
1-F13	3240	POWER STEERING SYSTEM
1-H13	3300	FRONT AXLE
1-I13	3310	FRONT BRAKE MECHANISMS
1-K13	3400	FRONT SUSPENSION MECHANISMS
1-M13	3401	FRONT SPRING & DAMPER
1-N13	3410	CROSSMEMBER & STABILIZER
1-C14	3700	TIRES & JACK
1-C15	3900	ENGINE & T/MISSION MOUNTINGS
1-D15	4000	EXHAUST SYSTEM
1-F15	4140	CLUTCH RELEASE & MASTER CYLINDERS (MANUAL TRANSMISSION)
1-G15	4145	CLUTCH PIPINGS (MANUAL TRANSMISSION)
1-H15	4160	ACCELERATOR CONTROL SYSTEM
1-I15	4200	FUEL TANK
1-M15	4300	CLUTCH & BRAKE PEDALS (MANUAL TRANSMISSION)
1-D16	4300A	BRAKE PEDALS (AUTOMATIC TRANSMISSION)
1-F16	4340	BRAKE MASTER CYLINDER & POWER BRAKE
1-H16	4360	BRAKE PIPINGS
1-J16	4400	PARKING BRAKE SYSTEM
1-L16	4500	FUEL PIPINGS
2-C03	6500	CHANGE CONTROL SYSTEM (AT)



CATLOG-NO= AUNA01-07

DATE. 1992-02

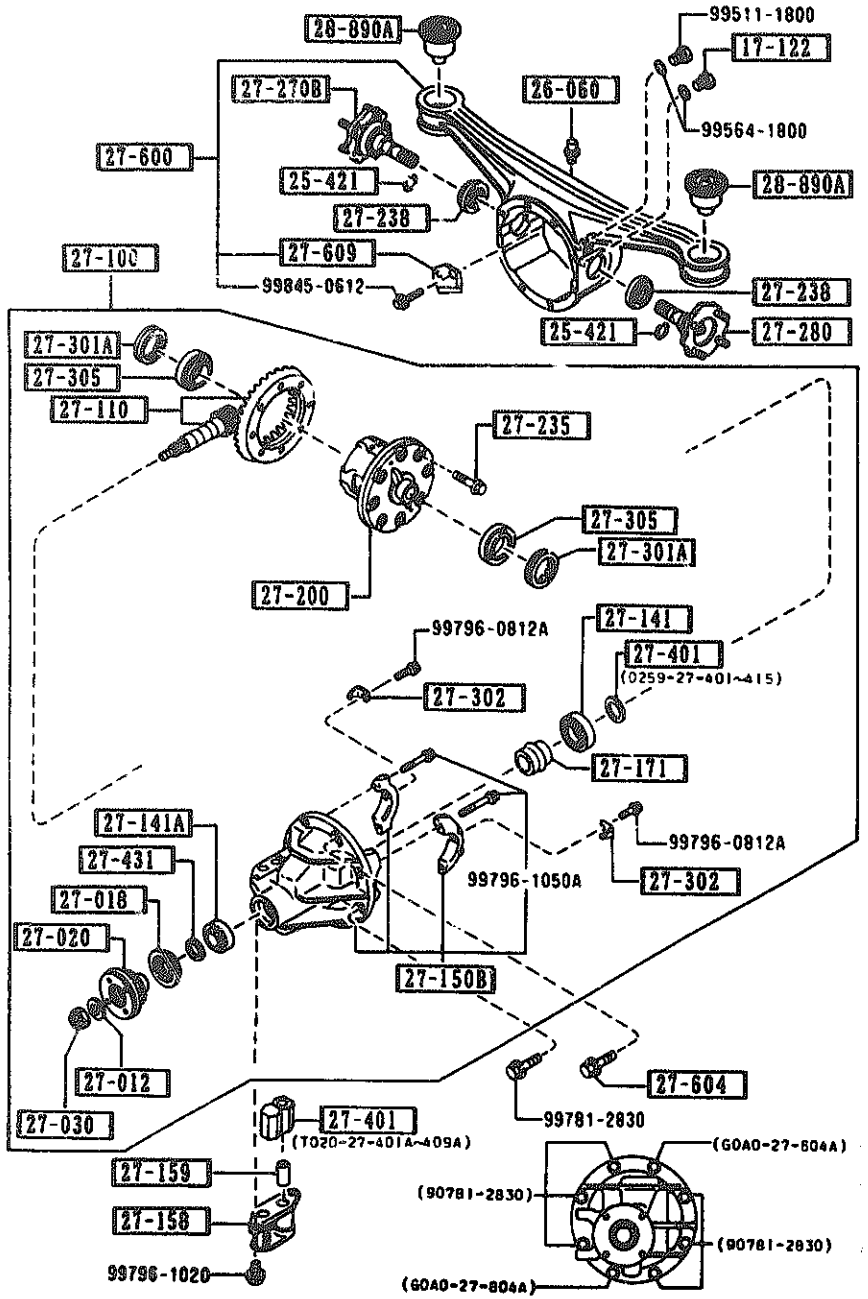

AUNA01

PART NO.	QTY	MODEL/RESTRICTION	MODEL/RESTRICTION	MODEL/RESTRICTION	FROM-TO
CONT'D					
T020-27-409A	1	L=51.050			-0401
27-431		SPACER			
T001-27-431	1				
27-600		CASING,DIFFERNTIAL			
T020-27-600D A (T020-27-600E)	1				-9609
T020-27-600E A (T020-27-600F)	1				9609-9926
T020-27-600F	1				9926-
27-604		BOLT,CARRIER			
G0A0-27-604A	2				
27-609		PLATE,BAFFLE-DIFF CASING			
M0A1-27-609A	1				
28-890A		RUBBER,SUB FRAME MTG			
NA01-28-890	2				

9609 NA35##-108360
9926 NA3#HH-122890
0401 MA35##-146561

CAT. AUNA01-07

1992-02

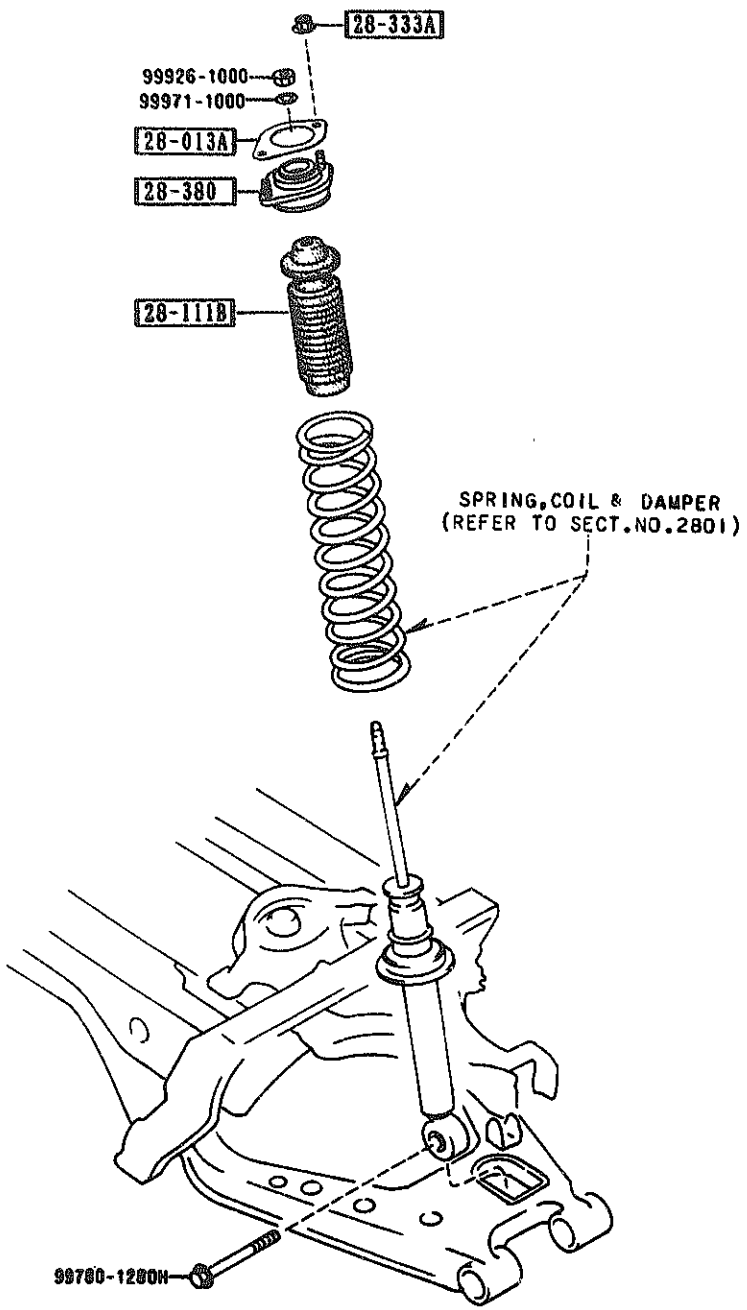

PART NO.	QTY	MODEL/RESTRICTION	MODEL/RESTRICTION	MODEL/RESTRICTION	FROM-TO
28-013A		SHEET,RUBBER			
G030-28-013A	2				9330-
28-111B		STOPPER,BUMP			
NA01-28-111	2				
28-333A		NUT,FLANGE			
H001-28-333	4				
28-380		RUBBER,MOUNTING			
NA01-28-380A	2				

9330 NA35##-100072

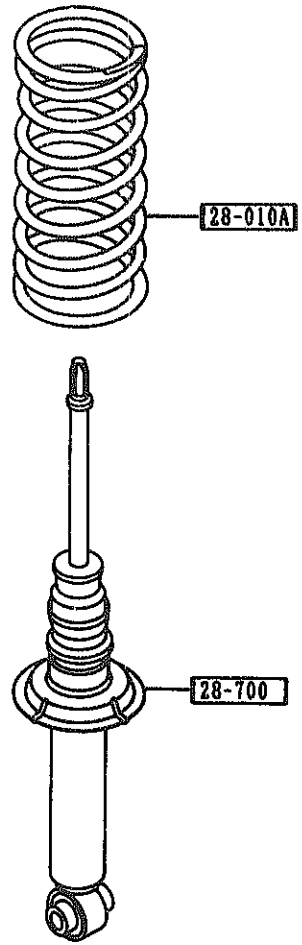

PART NO.	QTY	MODEL/RESTRICTION	MODEL/RESTRICTION	MODEL/RESTRICTION	FROM-TO
28-010A		SPRING,COIL-REAR			
NA01-28-011B	2	(MT)			
NA03-28-011	2	(AT)			
28-700		DAMPER,REAR			
NA01-28-700	2				

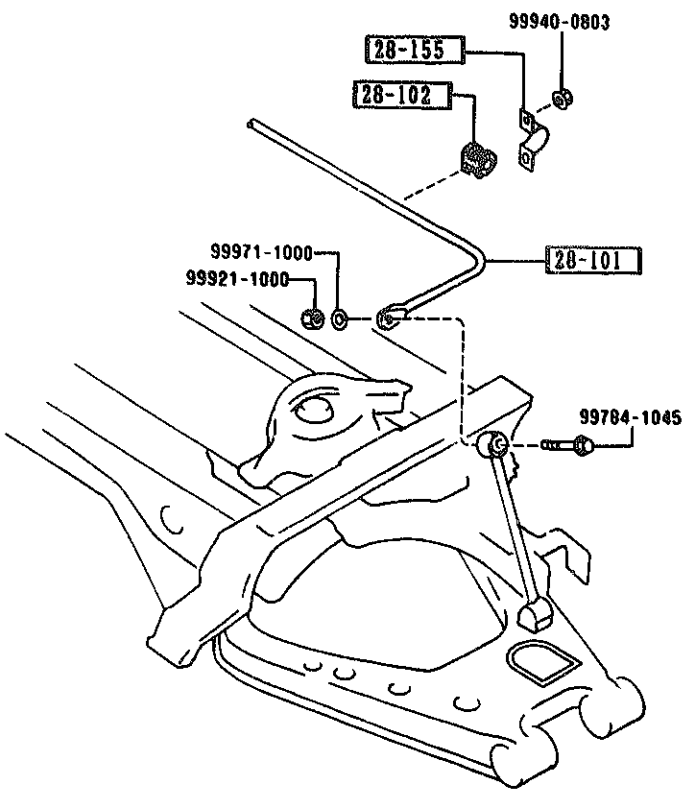

PART NO.	QTY	MODEL/RESTRICTION	MODEL/RESTRICTION	MODEL/RESTRICTION	FROM-TO
28-101		STABILIZER,RR			
NA01-28-151A	1				
28-102		BUSH,STABILIZER-RR			
FB01-28-156	2				
28-155		PLATE,STABILIZER-RR			
FB01-28-155	2				

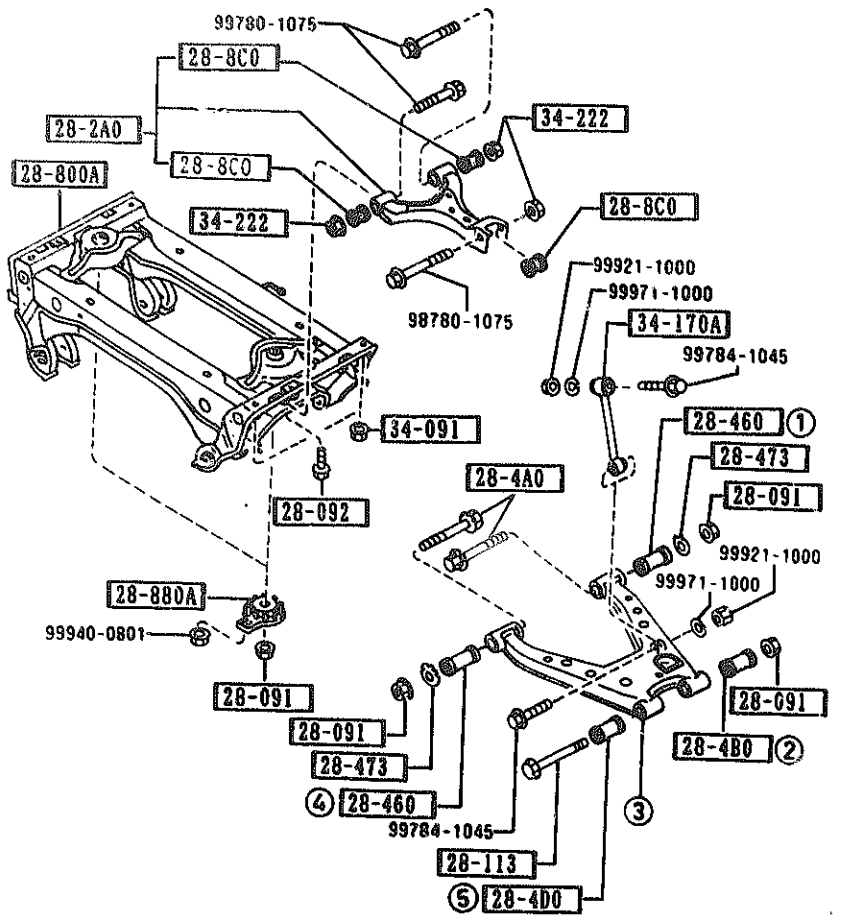

NOTE

① ... ⑤ ⇨ 28-300 / 28-300Z

THE D-CODE OF 28-300 / 28-300Z CONSISTS OF FIGURE NUMBERS ① THROUGH ⑤.

AUNA01

PART NO.	QTY	MODEL/RESTRICTION	MODEL/RESTRICTION	MODEL/RESTRICTION	FROM-TO
28-091		NUT			
8037-28-091	8				
28-092		BOLT,CONTROL LINK			
NA01-28-092	2				
28-113		BOLT			
NA01-28-113	2				
28-2A0		ARM,UPPER-REAR			
NA01-28-2A0B	2				
28-300		ARM(R),LOWER-REAR			
NA01-28-300	1				
28-300Z		ARM(L),LOWER-REAR			
NA01-28-350	1				
28-4A0		BOLT,ADJUST			
NA01-28-4A0	4				
28-4B0		BUSHING,RUBBER-LOWER ARM			
NA01-28-4B0	2				
28-4D0		BUSHING,RUBBER-LOWER ARM			
NA01-28-4D0	2				
28-460		BUSHING,LOWER ARM			
NA01-28-460	4				
28-473		PLATE,CAM-SUB FRAME			
NA01-28-473	4				
28-8C0		BUSHING,RUBBER			
NA01-28-8C0B	6				
28-800A		MEMBER,CROSS			
NA01-28-800B	1				
28-880A		WASHER,STOP			
NA01-28-880B	2				

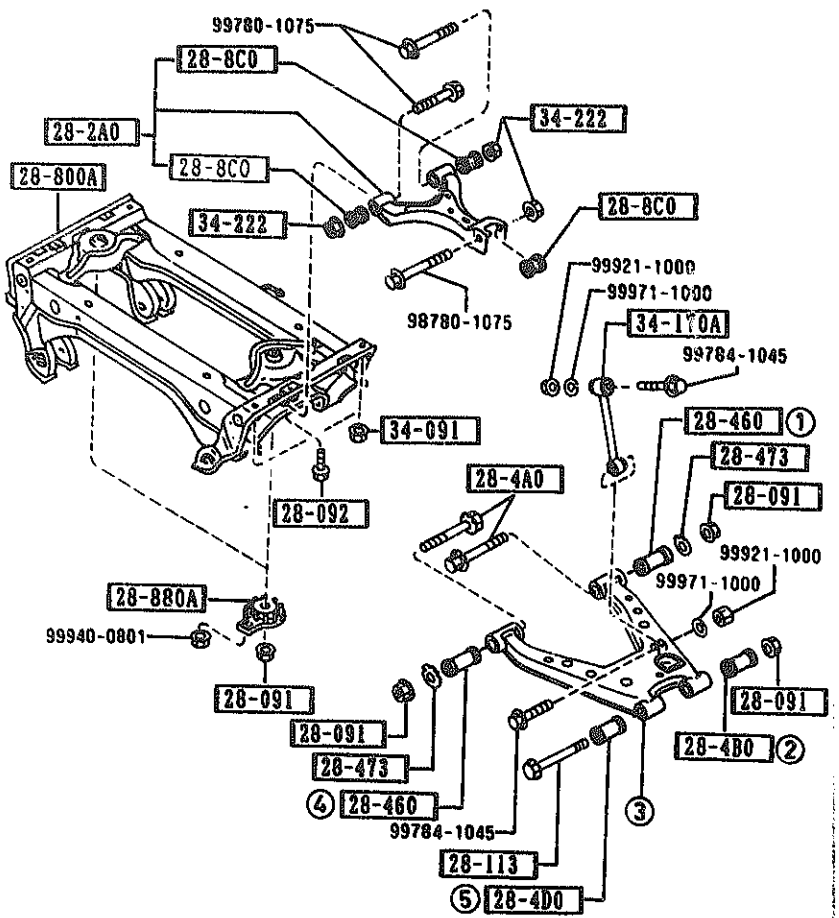

NOTE

① ... ⑤ ⇨ 28-300 28-300Z

THE D-CODE OF 28-300 28-300Z CONSISTS OF FIGURE NUMBERS ① THROUGH ⑤.

PART NO.	QTY	MODEL/RESTRICTION	MODEL/RESTRICTION	MODEL/RESTRICTION	FROM-TO
34-091		NUT			
FB01-34-091	4				
34-170A		LINK,CONTROL-STAB			
NA01-34-170	2				
34-222		NUT			
8871-34-222	6				

((URETHANE)+(W/AIR BAG))
(LEATHER)

(THIS ILLUSTRATION CONSISTS OF 2 PAGES)

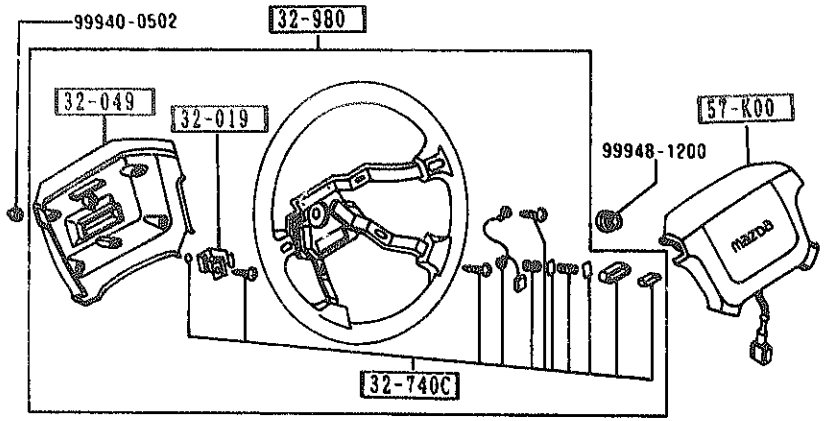

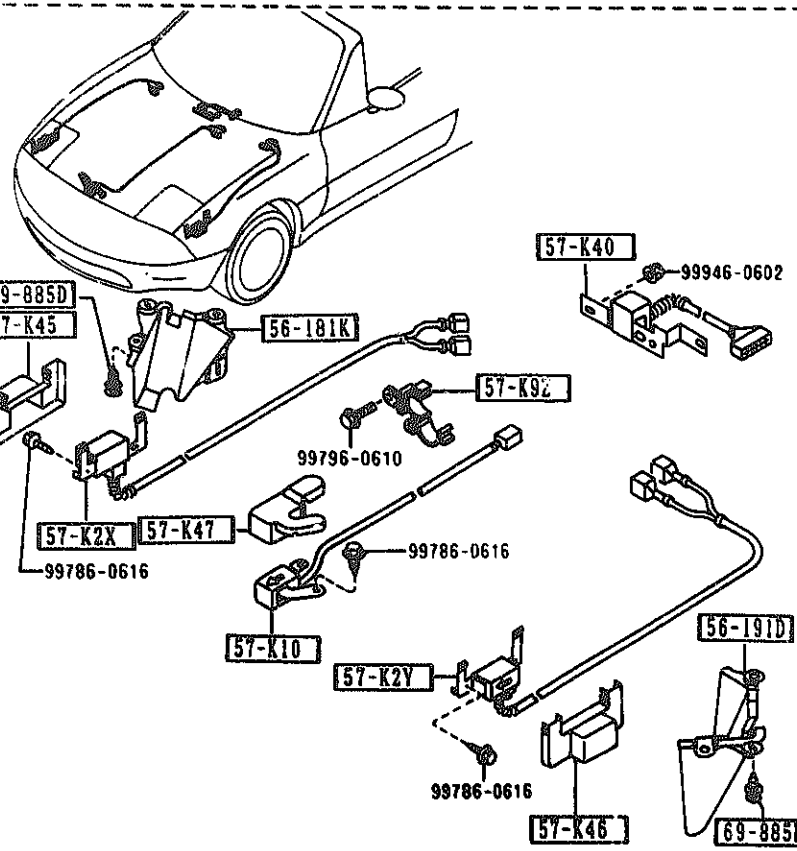

AUHA01

(CONT'D)

((URETHANE)+(W/O AIR BAG))

(THIS ILLUSTRATION CONSISTS OF 2 PAGES)

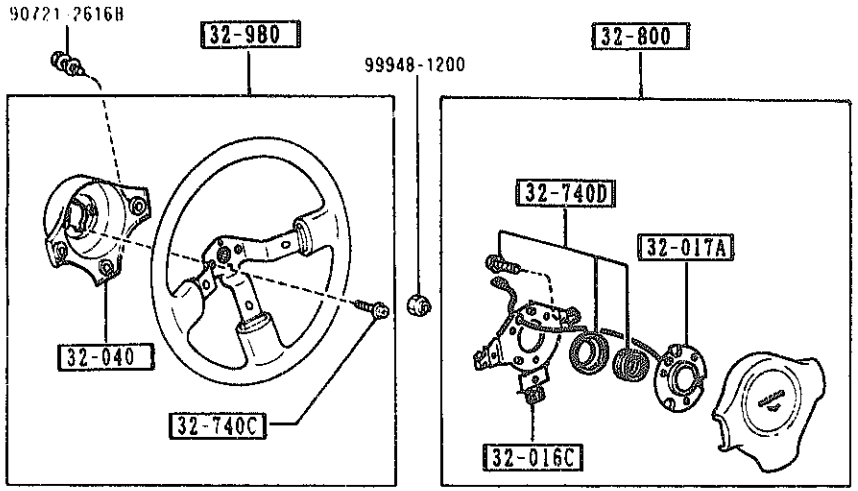

AUHA01

3200 STEERING WHEEL (1/2)

((URETHANE)+(W/AIR BAG))
(LEATHER)

(THIS ILLUSTRATION CONSISTS OF 2 PAGES)

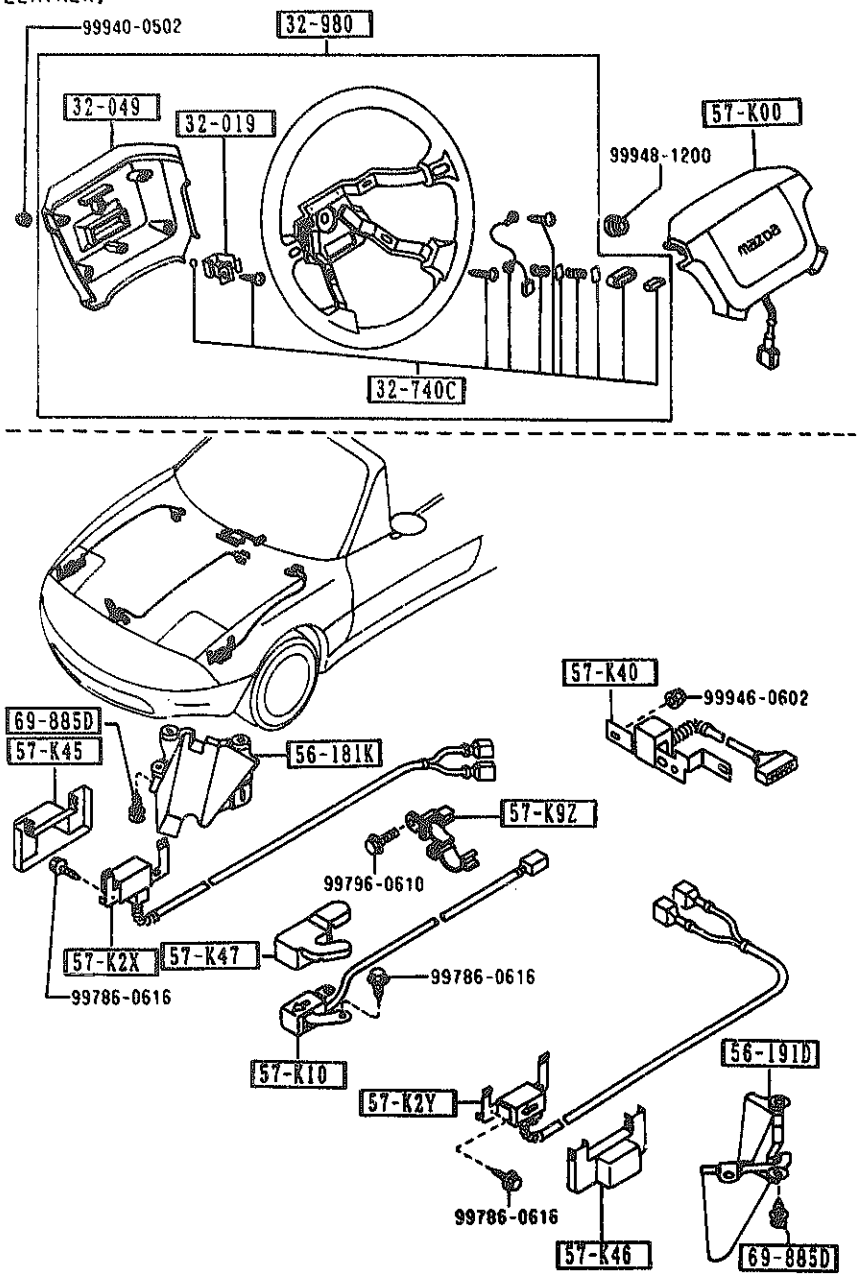

PART NO.	QTY	MODEL/RESTRICTION	MODEL/RESTRICTION	MODEL/RESTRICTION	FROM-TO
32-016C		PLATE,CONTACT			
B461-32-020	1	BASE, (W/O AIR BAG)			0701-
32-017A		PLATE,CONTACT			
B461-32-030	1	BASE, (W/O AIR BAG)			0701-
32-019		BRACKET,COUPLER			
NA01-32-019	1	PKG-OPT, V-SPECIAL, (W/AIR BAG)			
32-040		COVER,ST.WHEEL BOSS			
B461-32-040	1	BASE, (W/O AIR BAG)			0701-
32-049		COVER,WHEEL CORE			
NA01-32-049	1	PKG-OPT, V-SPECIAL, (W/AIR BAG)			
32-740C		PARTS SET,ST. WHEEL			
NA01-32-750	1	PKG-OPT, V-SPECIAL, (W/AIR BAG)			
B461-32-750	1	BASE, (W/O AIR BAG)			0701-
32-740D		PARTS SET,HORN CAP			
B461-32-740	1	BASE, (W/O AIR BAG)			0701-
32-800		CAP,HORN			
B461-32-800A	1	BASE, (W/O AIR BAG)			0701-
32-980		BOSS,STEERING WHEEL			
NA01-32-980B	1	(URETHANE+W/AIR BAG)			
NA02-32-980B	1	PKG-OPT, V-SPECIAL, (LEATHER)			
B461-32-980	1	(URETHANE+W/O AIR BAG)			0701-
56-181K		COVER(R),SENSOR-AIR BAG			
NA01-56-191A	1	(W/AIR BAG)			

0701 NA35##-200041

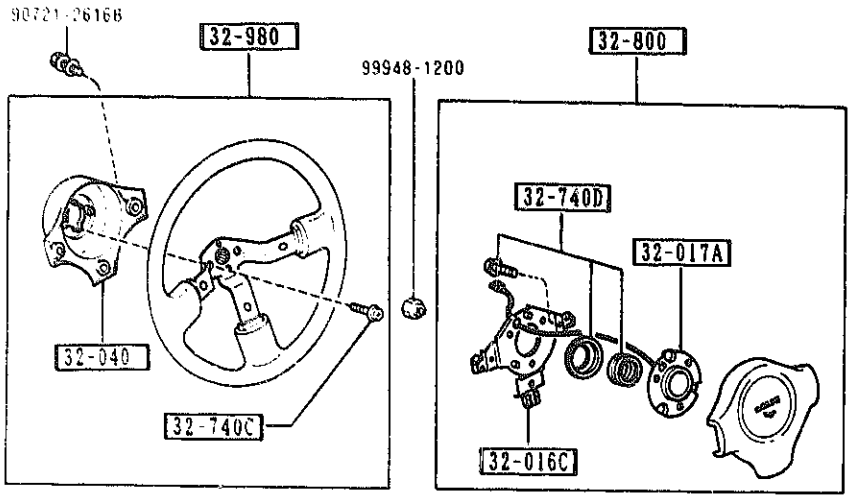

PART NO.	QTY	MODEL/RESTRICTION	MODEL/RESTRICTION	MODEL/RESTRICTION	FROM-TO
56-191D		COVER(L),SENSOR-AIR BAG			
NA01-56-181A	1	(W/AIR BAG)			
57-K00		MODULE,AIR BAG			
NA01-57-K00A	1	(W/AIR BAG)			
00		NA0 BLACK			
57-K10		SENSOR(C),AIR BAG			
NA01-57-K10G A (NA01-57-K10H)	1				-9601
NA01-57-K10H	1	(W/AIR BAG)			9601-
57-K2X		SENSOR(R),AIR BAG			
NA01-57-K2XJ	1	(W/AIR BAG)			
57-K2Y		SENSOR(L),AIR BAG			
NA01-57-K2YJ	1	(W/AIR BAG)			
57-K40		SENSOR,AIR BAG-INNER			
NA01-57-K40D	1	(W/AIR BAG)			
57-K45		COVER(R),SENSOR			
NA01-57-K45B	1	(W/AIR BAG)			
57-K46		COVER(L),SENSOR			
NA01-57-K46B	1	(W/AIR BAG)			
57-K47		COVER(C),SENSOR			
NA01-57-K47B	1	(W/AIR BAG)			
57-K9Z		BRACKET,CLIP			
NA01-57-K9ZA A (NA01-57-K9ZB)	1				-9516
NA01-57-K9ZB	1	(W/AIR BAG)			9516-
69-885D		FASTENER			
NA01-56-145	8	(W/AIR BAG)			

9516 NA35##-103924
9601 NA35##-106797

3210 STEERING COLUMN & SHAFTS

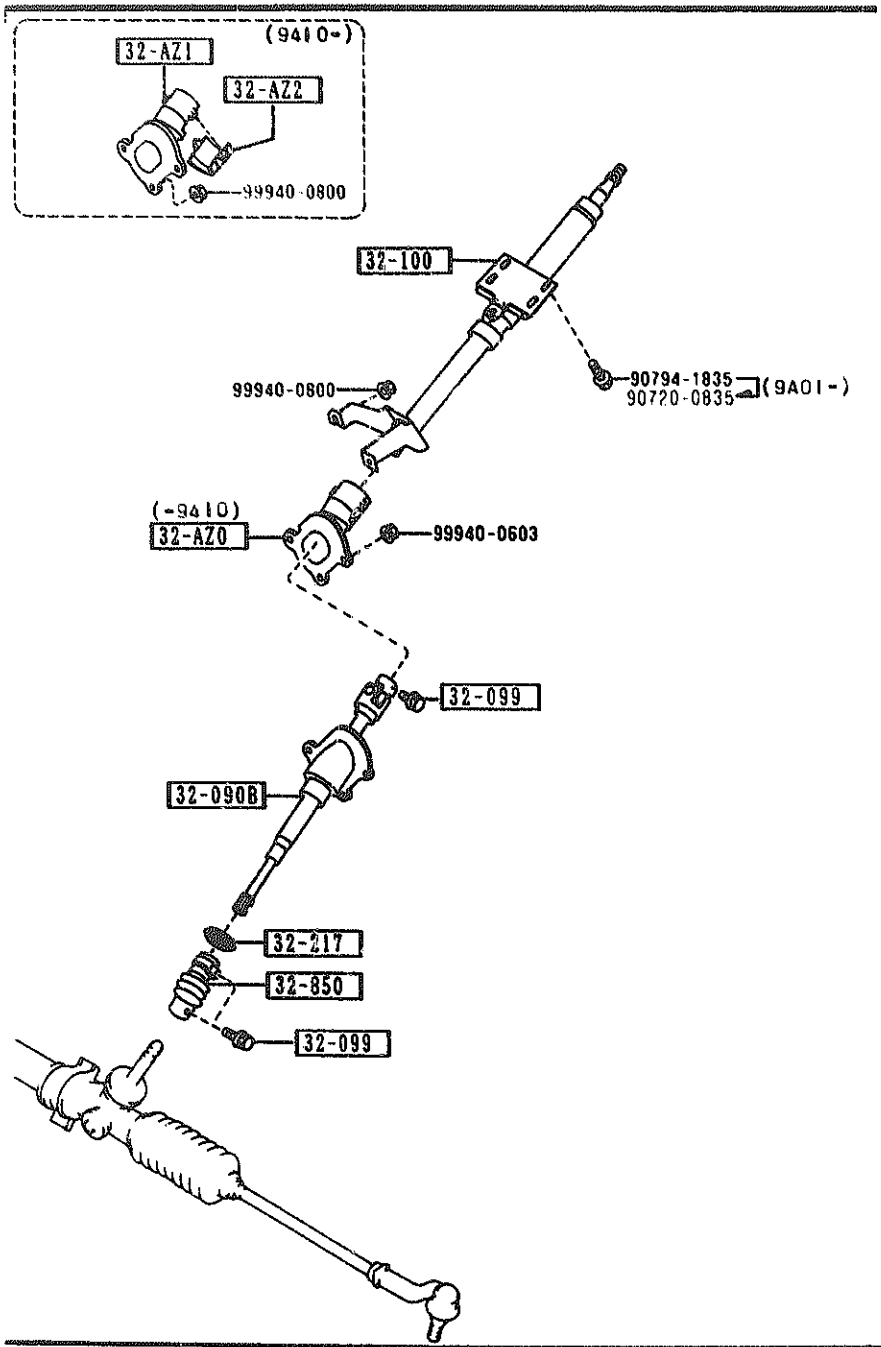

PART NO.	QTY	MODEL/RESTRICTION	MODEL/RESTRICTION	MODEL/RESTRICTION	FROM-TO
32-AZ0		COVER,JOINT			
NA01-32-AZ0A (NA01-32-AZ2A)	1				-9410
32-AZ1		COVER,JOINT-UPPER			
NA01-32-AZ1B	1				9401-
32-AZ2		COVER,JOINT-LOWER			
NA01-32-AZ2A	1				9410-
32-090B		SHAFT,INTERMED.			
NA01-32-090A AN(NA01-32-090B)	1				-0301
NA02-32-090A AN(NA02-32-090B)	1				-0301
NA01-32-090B	1	(W/O P.S.+W/AIR BAG)			0301-
NA02-32-090B	1	(W/P.S.+W/AIR BAG)			0301-
NA07-32-090A	1	(W/O P.S.+W/O AIR BAG)			0701-
NA08-32-090A	1	(W/P.S.+W/O AIR BAG)			0701-
32-099		BOLT,SHAFT			
B455-32-099	3				
32-100		SHAFT,ENGY.ABSORBER			
NA01-32-100B	1	(W/AIR BAG)			
NA07-32-100A	1	(W/O AIR BAG)			0701-
32-217		GROMMET			
NA01-32-217	1				
32-850		JOINT,STEERING			
NA01-32-850	1				

9410 NA35##-100262
0301 NA35##-141901
0701 NA35##-200041

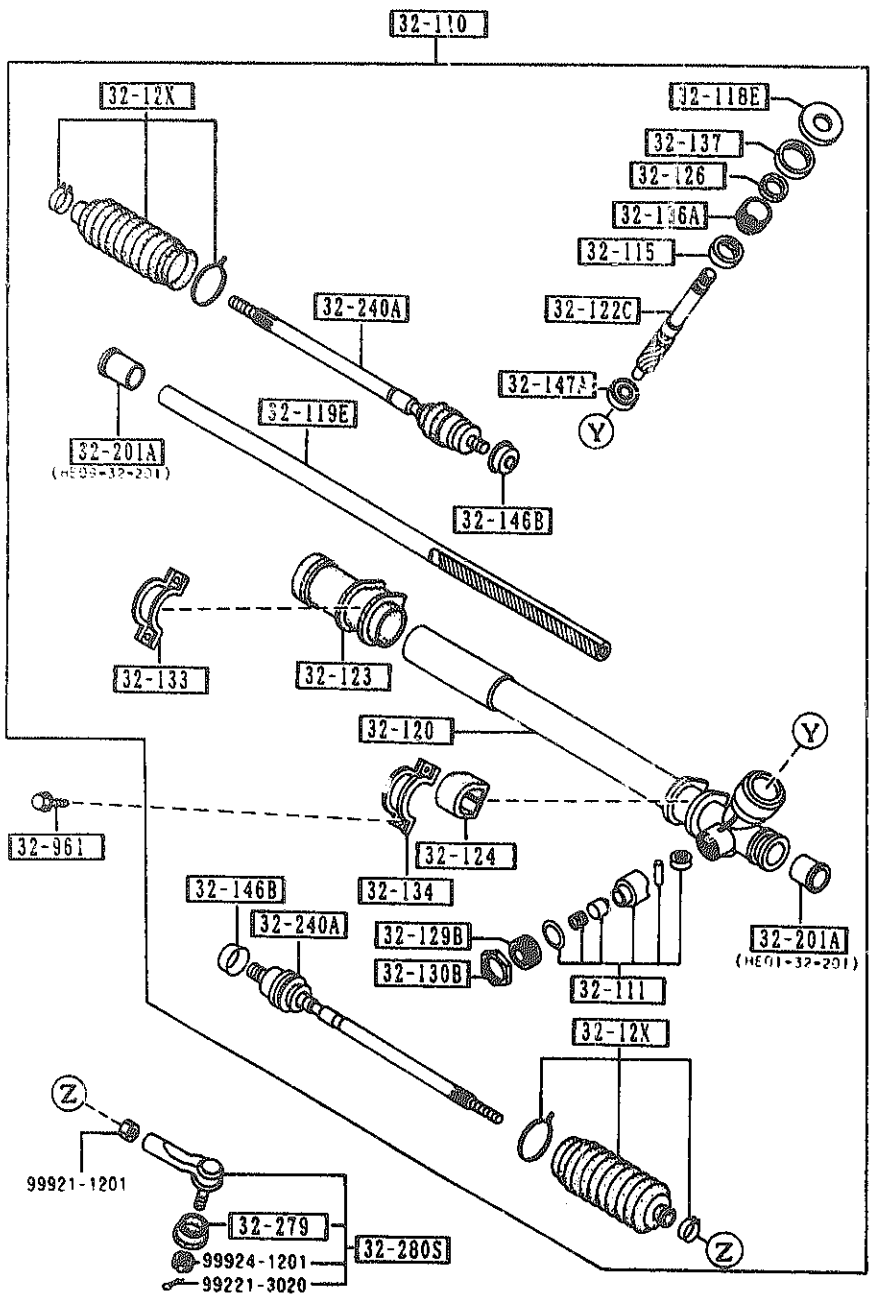

AUNA01

PART NO.	QTY	MODEL/RESTRICTION	MODEL/RESTRICTION	MODEL/RESTRICTION	FROM-TO
32-110		GEAR,STEERING			
NA01-32-110	1				
32-111		YOKE,SUPPORT			
GJ21-32-111	1				
32-115		BEARING,ST. GEAR			
G030-32-115	1				
32-118E		COVER,DUST-ST. GEAR			
NA01-32-118	1				
32-119E		RACK,STEERING GEAR			
NA01-32-119	1				
32-12X		BOOT SET,ST. GEAR			
NA01-32-12X	2				
32-120		HOUSING,GEAR			
NA01-32-120	1				
32-122C		PINION,STEERING GEAR			
NA01-32-122	1				
32-123		RUBBER,MOUNTING			
NA01-32-123	1				
32-124		RUBBER,MOUNTING			
NA01-32-124	1				
32-126		SEAL,SHAFT			
G030-32-126	1				
32-129B		PLUG,PINION			
HE01-32-129	1				
32-130B		NUT,LOCK			
S083-32-137	1				
32-133		PLATE,CLAMP			
BC51-32-133	1				

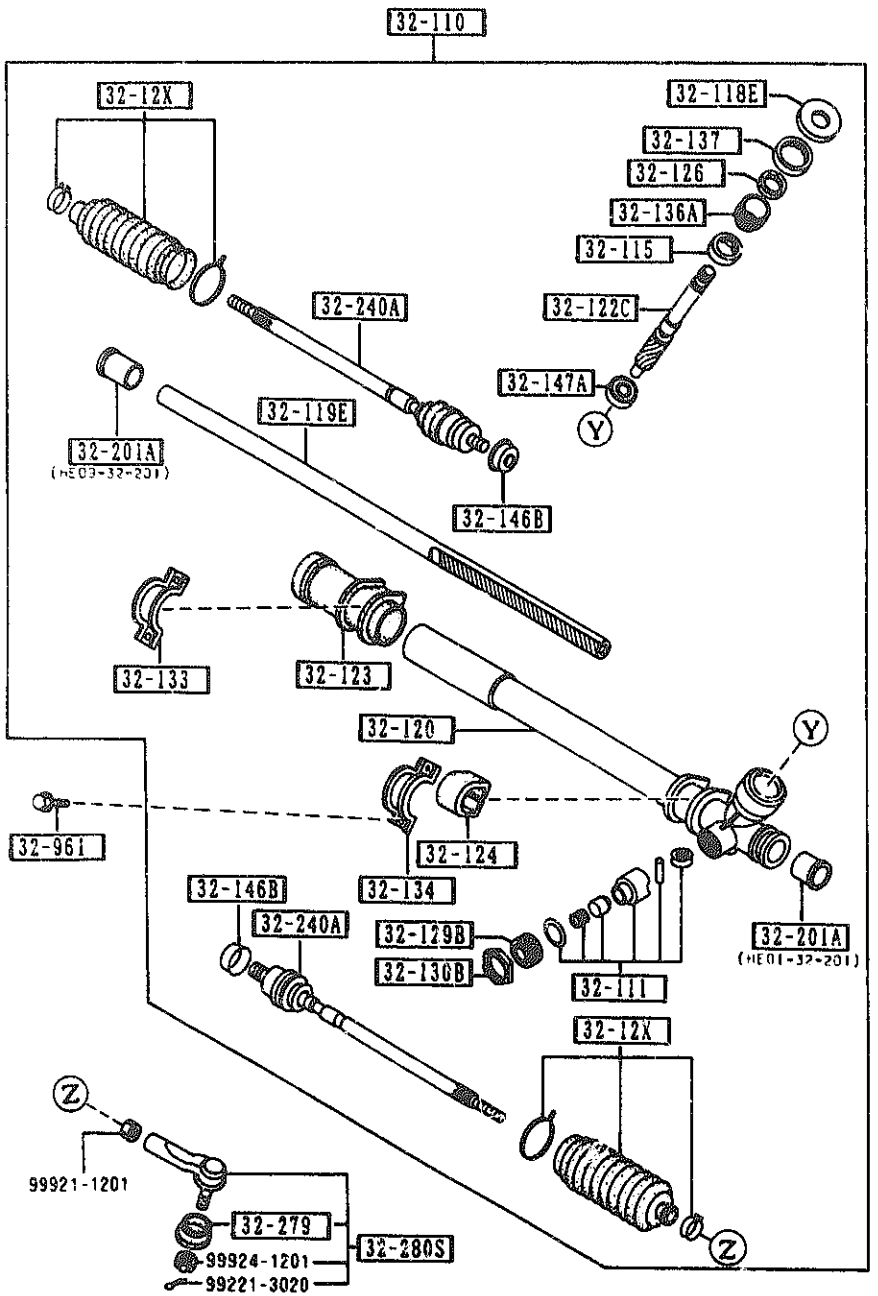

AUNA01

3220 -2 ※ STEERING GEAR
(W/O POWER STEERING)

PART NO.	QTY	MODEL/RESTRICTION	MODEL/RESTRICTION	MODEL/RESTRICTION	FROM-TO
32-134		PLATE,CLAMP			
NA01-32-134	1				
32-136A		COVER,REAR			
G030-32-136	1				
32-137		NUT,LOCK			
S030-32-137	1				
32-146B		WASHER			
HA14-32-146	2				
32-147A		BEARING,PINION			
G030-32-147	1				
32-201A		BUSHING,RACK-ST. GEAR			
HE01-32-201	1				
HE09-32-201	1				
32-240A		JOINT,BALL			
NA01-32-240	2				
32-279		SEAL,DUST-BALL JOINT			
8455-32-279	2				
32-280S		JOINT SET,BALL			
8AN1-32-280	2				
32-961		BOLT			
G030-32-961	4				

SECTION NAME INDEX (CHASSIS)

LO.NO	SEC.NO	SECTION NAME
1-C11	2505	REAR PROPELLER SHAFT
1-D11	2550	REAR DRIVE SHAFT
1-E11	2600	REAR AXLE
1-F11	2610	REAR BRAKE MECHANISMS
1-H11	2710	REAR DIFFERENTIALS (NORMAL DIFF.)
1-L11	2710 A	REAR DIFFERENTIALS (LIMITED SLIP DIFF.)
1-D12	2800	REAR SUSPENSION MECHANISMS
1-E12	2801	REAR SPRING & DAMPER
1-F12	2810	REAR STABILIZER
1-G12	2830	REAR LOWER ARMS & SUB FRAME
1-I12	3200	STEERING WHEEL
1-L12	3210	STEERING COLUMN & SHAFTS
1-M12	3220	STEERING GEAR (W/O POWER STEERING)
1-C13	3220 A	STEERING GEAR (W/ POWER STEERING)
1-F13	3240	POWER STEERING SYSTEM
1-H13	3300	FRONT AXLE
1-I13	3310	FRONT BRAKE MECHANISMS
1-K13	3400	FRONT SUSPENSION MECHANISMS
1-M13	3401	FRONT SPRING & DAMPER
1-N13	3410	CROSSMEMBER & STABILIZER
1-C14	3700	TIRES & JACK
1-C15	3900	ENGINE & T/MISSION MOUNTINGS
1-D15	4000	EXHAUST SYSTEM
1-F15	4140	CLUTCH RELEASE & MASTER CYLINDERS (MANUAL TRANSMISSION)
1-G15	4145	CLUTCH PIPINGS (MANUAL TRANSMISSION)
1-H15	4160	ACCELERATOR CONTROL SYSTEM
1-I15	4200	FUEL TANK
1-M15	4300	CLUTCH & BRAKE PEDALS (MANUAL TRANSMISSION)
1-D16	4300A	BRAKE PEDALS (AUTOMATIC TRANSMISSION)
1-F16	4340	BRAKE MASTER CYLINDER & POWER BRAKE
1-H16	4360	BRAKE PIPINGS
1-J16	4400	PARKING BRAKE SYSTEM
1-L16	4500	FUEL PIPINGS
2-C03	4600	CHANGE CONTROL SYSTEM (AT)

CATLOG-NO= AUNA01-07

DATE. 1992-02

3220 A STEERING GEAR
(W/ POWER STEERING)

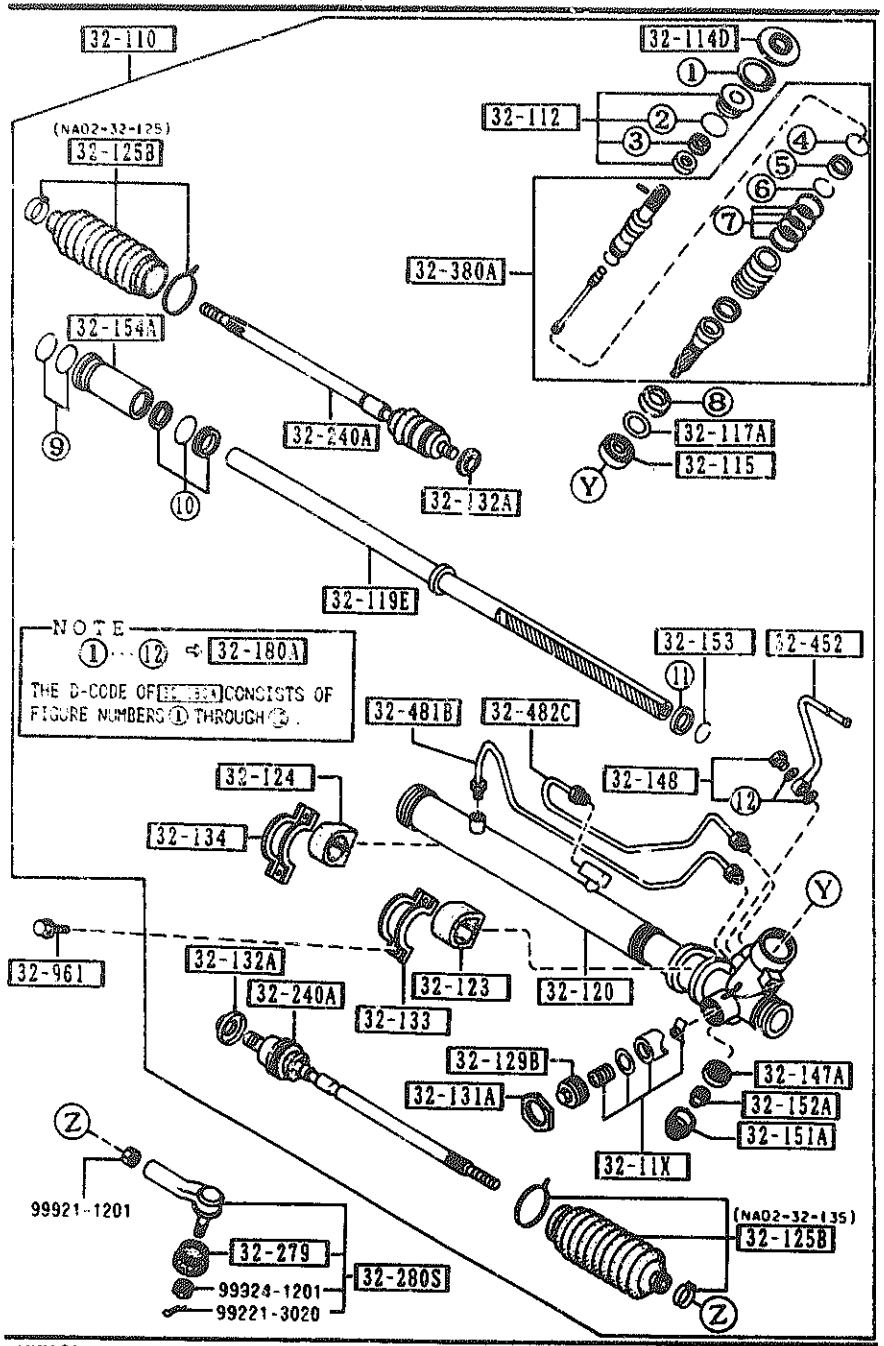

AUNA01

3220 A-1 STEERING GEAR
(W/ POWER STEERING)

PART NO.	QTY	MODEL/RESTRICTION	MODEL/RESTRICTION	MODEL/RESTRICTION	FROM-TO
32-11X		YOKE SET,SUPPORT-ST. GEAR			
NA02-32-11X	1				
32-110		GEAR,STEERING			
NA02-32-110	1				
32-112		COVER,DUST			
NA02-32-112	1				
32-114D		COVER,DUST-ST. GEAR			
NA02-32-114	1				
32-115		BEARING,ST. GEAR			
NA02-32-115	1				
32-117A		SPACER,STEERING GEAR			
NA02-32-121	1				
32-119E		RACK,STEERING GEAR			
NA02-32-119	1				
32-120		HOUSING,GEAR			
NA02-32-120	1				
32-123		RUBBER,MOUNTING			
NA02-32-123	1				
32-124		RUBBER,MOUNTING			
NA02-32-124	1				
32-125B		BOOT,RACK			
NA02-32-125	1	(FOR RIGHT)			
NA02-32-135	1	(FOR LEFT)			
32-129B		PLUG,PINION			
NA02-32-129	1				
32-131A		NUT,LOCK-RACK			
NA02-32-131	1				

CAT. AUNA01-07

1992-02

3220 A STEERING GEAR
(W/ POWER STEERING)

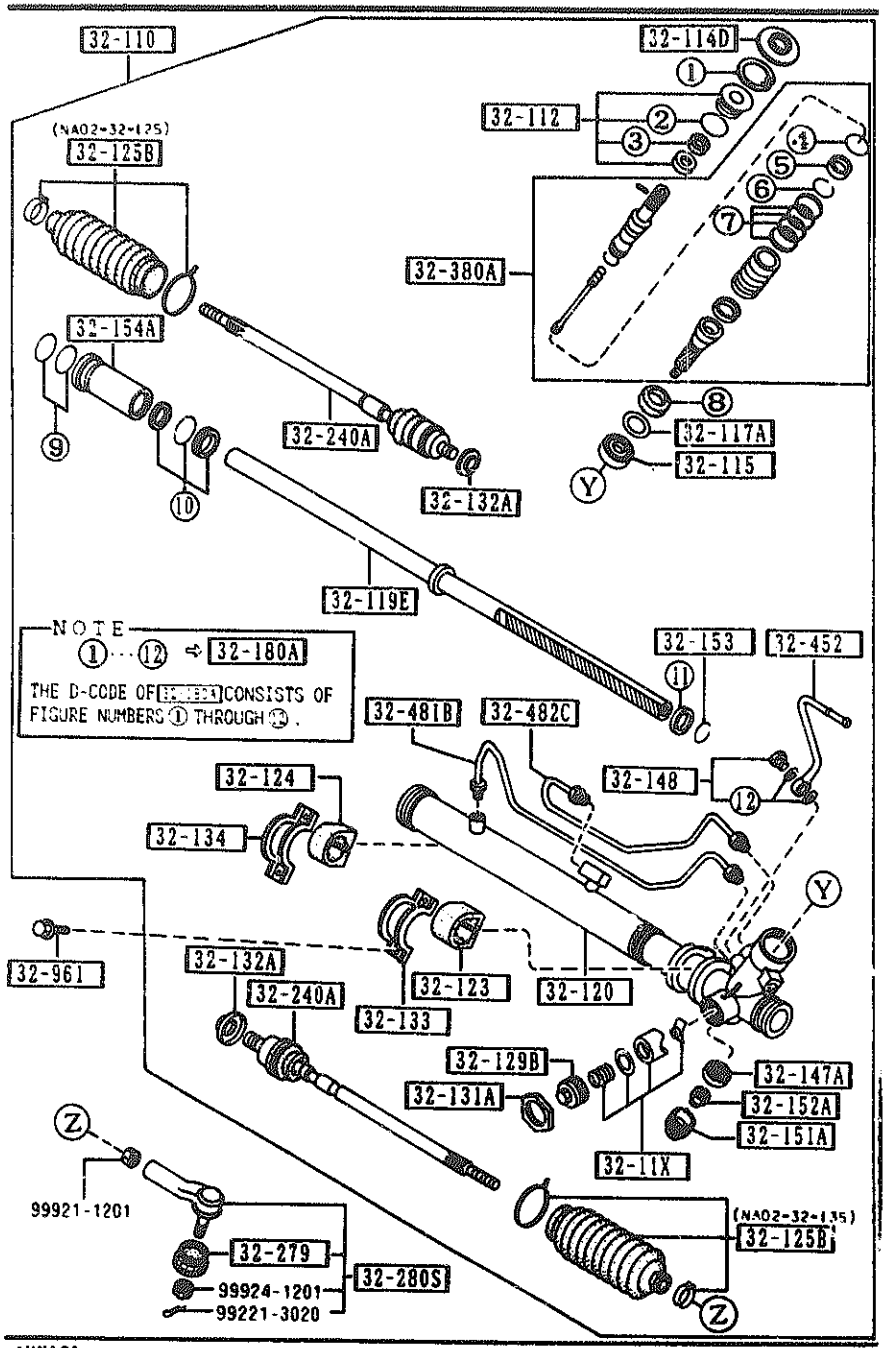

AUNA01

3220 A-2 STEERING GEAR
(W/ POWER STEERING)

PART NO.	QTY	MODEL/RESTRICTION	MODEL/RESTRICTION	MODEL/RESTRICTION	FROM-TO
32-132A		WASHER			
NA02-32-126	2				
32-133		PLATE,CLAMP			
NA02-32-133	1				
32-134		PLATE,CLAMP			
NA02-32-134	1				
32-147A		BEARING,PINION			
NA02-32-147	1				
32-148		EYE BOLT KIT,ST. GEAR			
D002-32-148	1				
32-151A		PLUG,PINION-ST.GEAR			
NA02-32-151	1				
32-152A		NUT,ADJUST			
NA02-32-152	1				
32-153		RING,BACK UP			
NA02-32-153	1				
32-154A		HOLDER,STEERING GEAR			
NA02-32-154	1				
32-180A		SEAL KIT,ST. GEAR			
NA02-32-180	1				
32-240A		JOINT,BALL			
NA02-32-240	2				
32-279		SEAL,DUST-BALL JOINT			
B455-32-279	2				
32-280S		JOINT SET,BALL			
8AN1-32-280	2				
32-380A		VALVE,ST. GEAR			
NA02-32-380	1				

CAT. AUNA01-07

1992-02

3220 A STEERING GEAR
(W/ POWER STEERING)

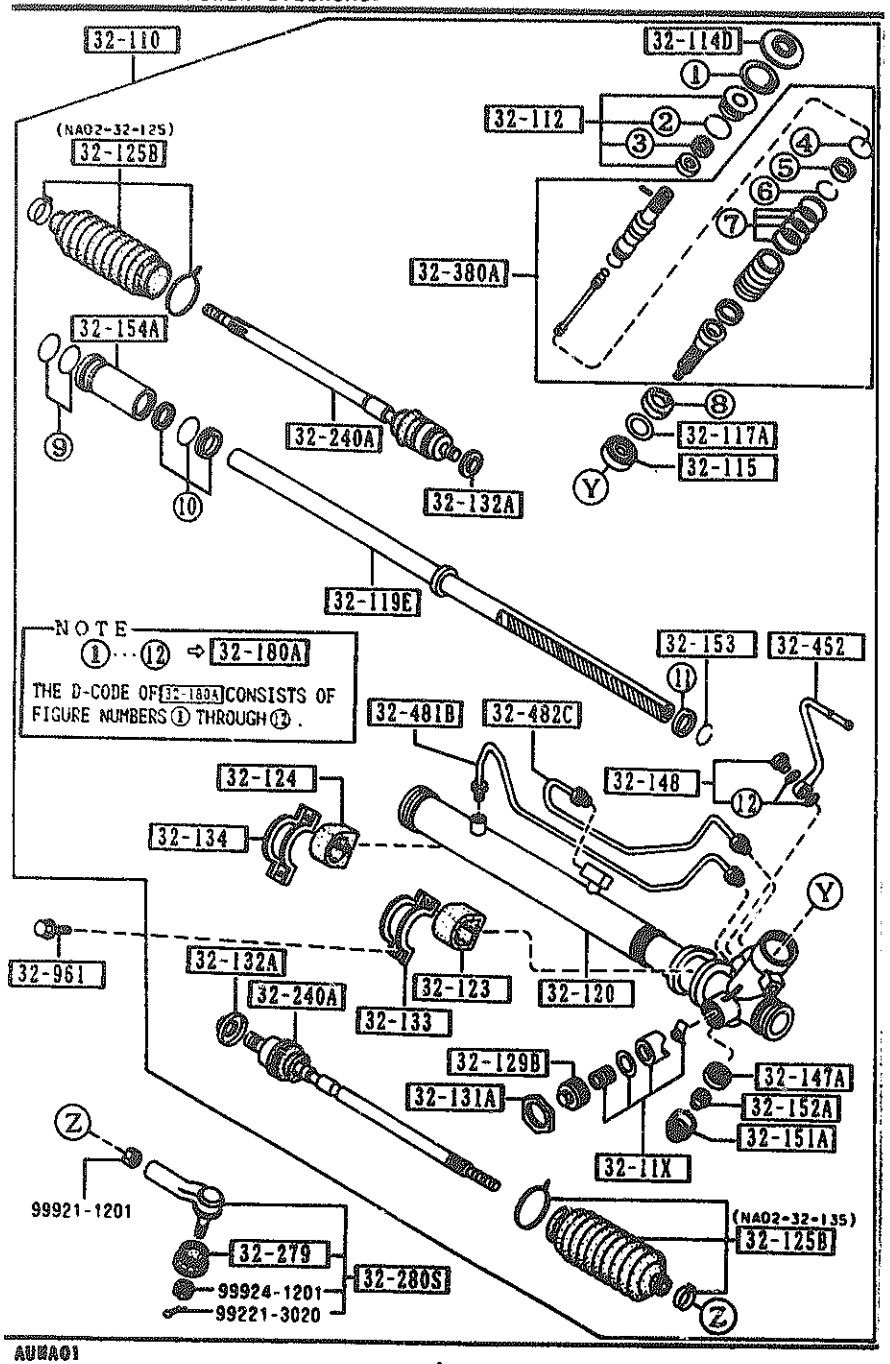

AUNA01

3220 A-3 ※ STEERING GEAR
(W/ POWER STEERING)

PART NO.	QTY	MODEL/RESTRICTION	MODEL/RESTRICTION	MODEL/RESTRICTION	FROM-TO
32-452		PIPE'B',ST. GEAR			
NA02-32-452	1				
32-481B		PIPE'A',CYLINDER			
NA02-32-481	1				
32-482C		PIPE'B',CYLINDER			
NA02-32-482	1				
32-961		BOLT			
G030-32-961	4				

CAT. AUNA01-07

1992-02

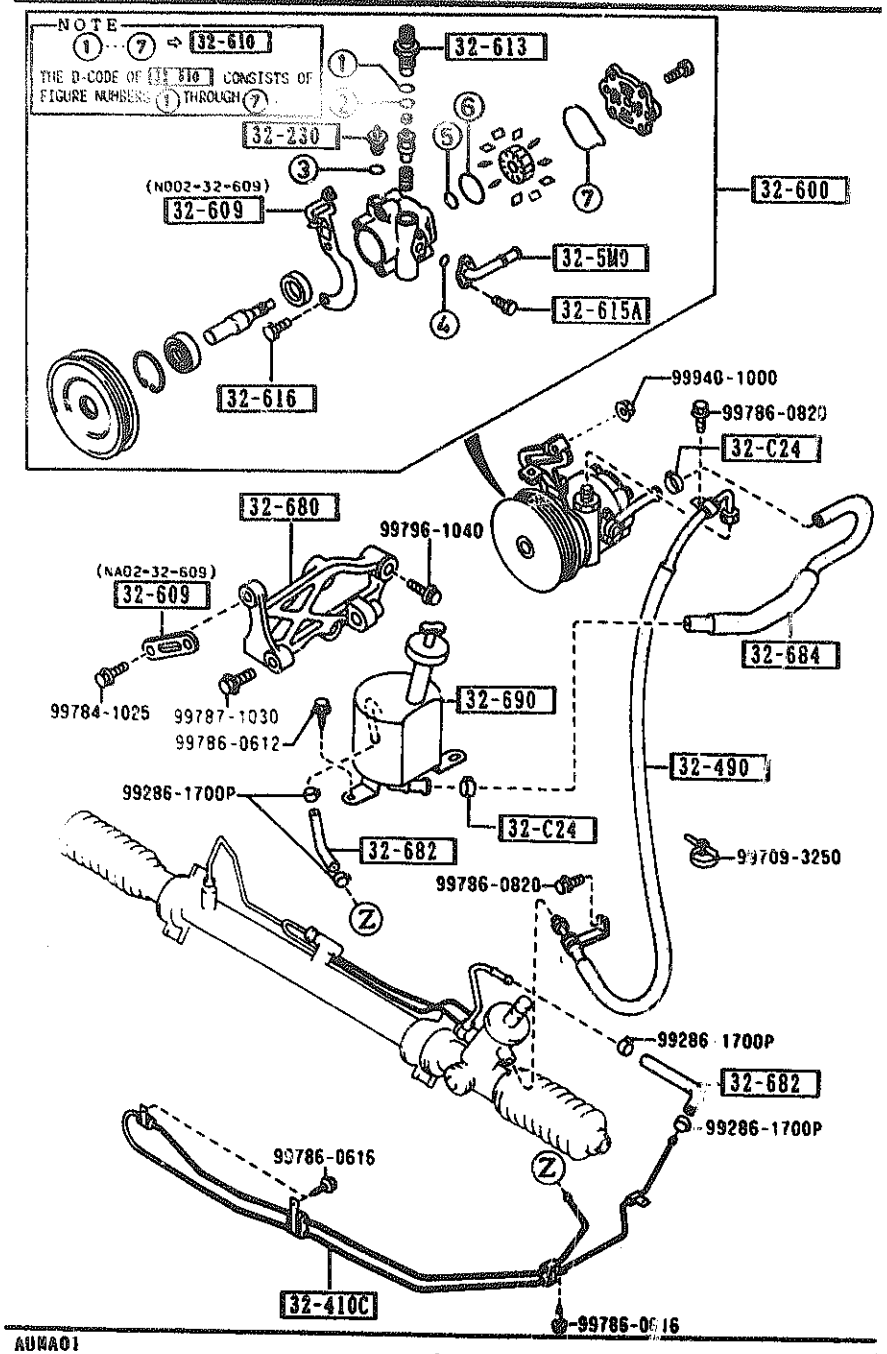

AUNA01

PART NO.	QTY	MODEL/RESTRICTION	MODEL/RESTRICTION	MODEL/RESTRICTION	FROM-TO
32-C24		CLAMP,HOSE-P.S.			
G238-32-C24	2				
32-230		SWITCH,PRESSURE-P.S.			
B456-32-230	1				
32-410C		PIPE,RETURN			
NA02-32-410 AN(NA02-32-410A)	1				-0508
NA02-32-410A	1				0508-
32-490		HOSE,PRESSURE			
NA02-32-490A A (NA02-32-490B)	1				-0201
NA02-32-490B	1				0201-
32-5M0		PIPE,SUCTION			
N002-32-5M0	1				
32-600		PUMP,VANE			
N002-32-600A AN(N002-32-600B)	1				-0301
N002-32-600B	1				0301-
32-609		BRACKET,VANE PUMP			
NA02-32-609	1	KUROISHI TEKKO			
N002-32-609	1	NIHON POWER STEERING			
32-610		SEAL KIT,VANE PUMP			
N002-32-610	1				
32-613		NIPPLE,VANE PUMP			
N002-32-613	1				
32-615A		BOLT			
B456-32-615	2				
32-616		BOLT,VANE PUMP			
B456-32-616	2				

0201 NA35##-137180
0301 NA35##-141901
0508 NA35##-150830

CAT. AUNA01-07

1992-02

3240 POWER STEERING SYSTEM

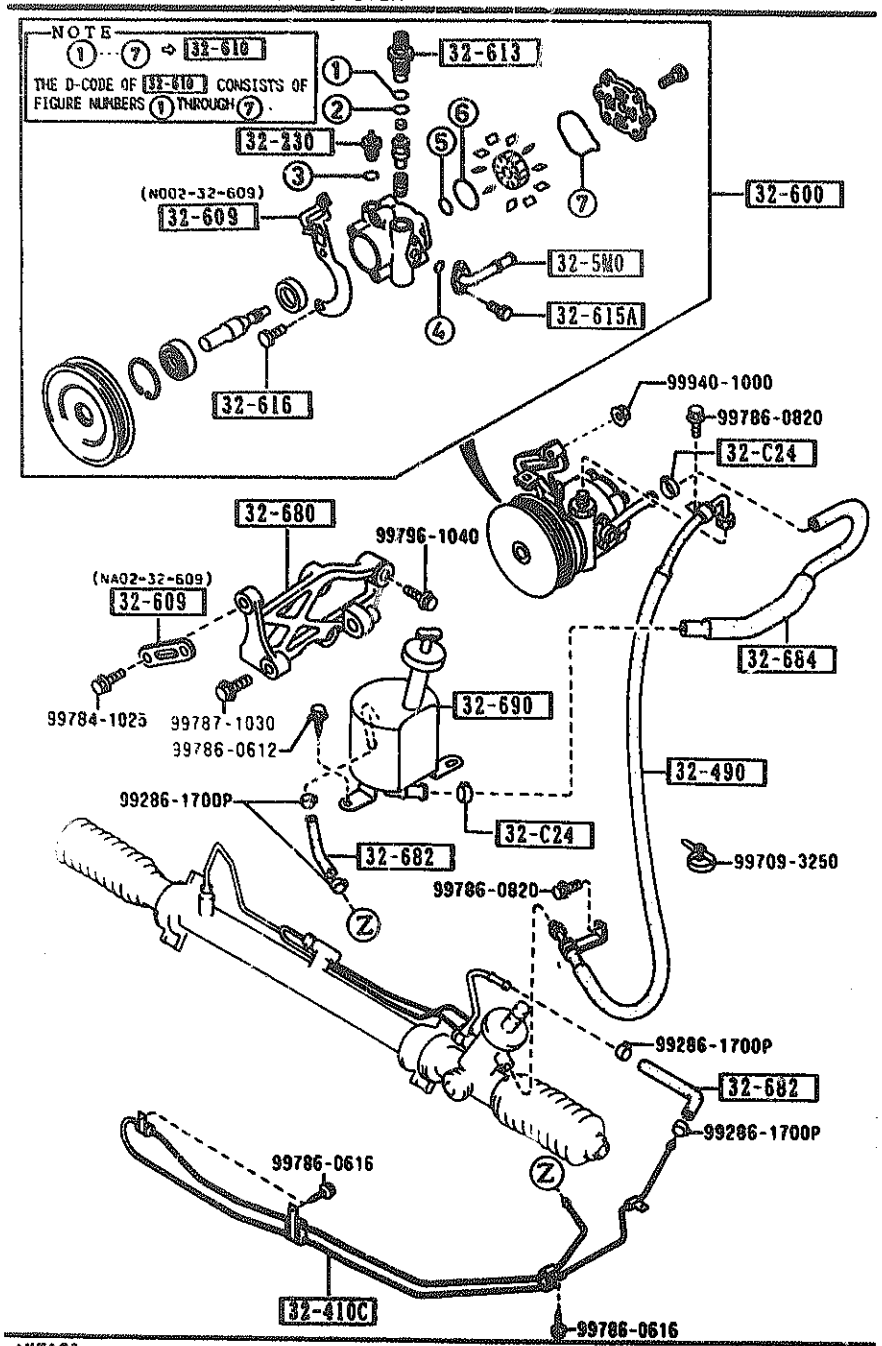

PART NO.	QTY	MODEL/RESTRICTION	MODEL/RESTRICTION	MODEL/RESTRICTION	FROM-TO
32-680		BRACKET,VANE PUMP			
NA02-32-680	1				
32-682		HOSE,RETURN			
NA02-32-682	2				
32-684		HOSE,RETURN			
NA02-32-684B	1				
32-690		TANK,VANE PUMP			
NA02-32-690 A (NA02-32-690A)	1				-9B20
NA02-32-690A	1				9B20 -

9B20 NA35##-128848

AUNA01

CAT. AUNA01-07

1992-02

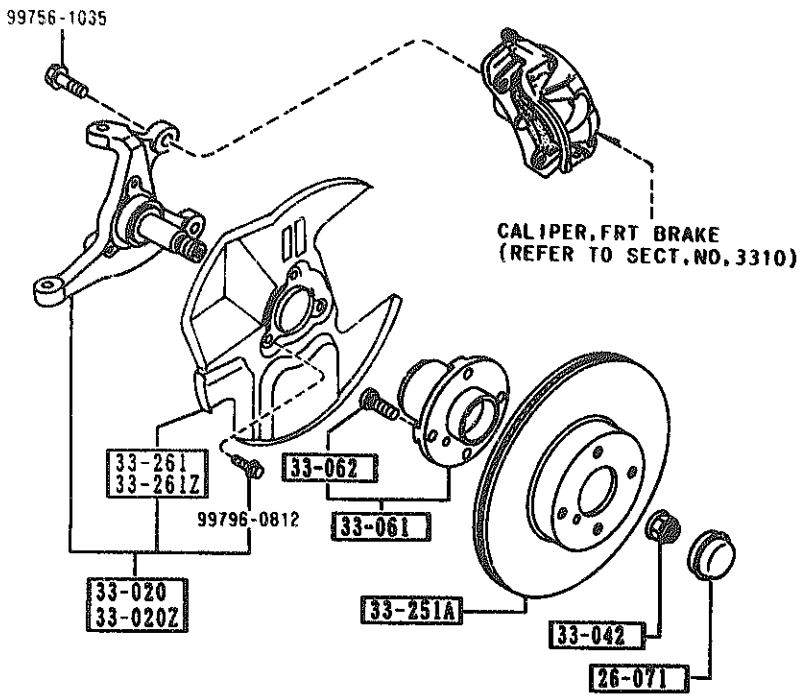

PART NO.	QTY	MODEL/RESTRICTION	MODEL/RESTRICTION	MODEL/RESTRICTION	FROM-TO
26-071		CAP,HUB			
8455-26-071	2				
33-020		KNUCKLE(R),STEERING			
NA01-33-020A	1				
33-020Z		KNUCKLE(L),STEERING			
NA01-33-030A	1				
33-042		NUT			
NA01-33-042A	2	W/WASHER			
33-061		HUB,WHEEL			
NA01-33-04X	2				
33-062		BOLT,HUB			
8455-33-062	8				
33-251A		PLATE,DISC			
NA01-33-25X	2				
33-261		COVER(R),DUST			
NA01-33-261	1				
33-261Z		COVER(L),DUST			
NA01-33-271	1				

3310 -1 FRONT BRAKE MECHANISMS

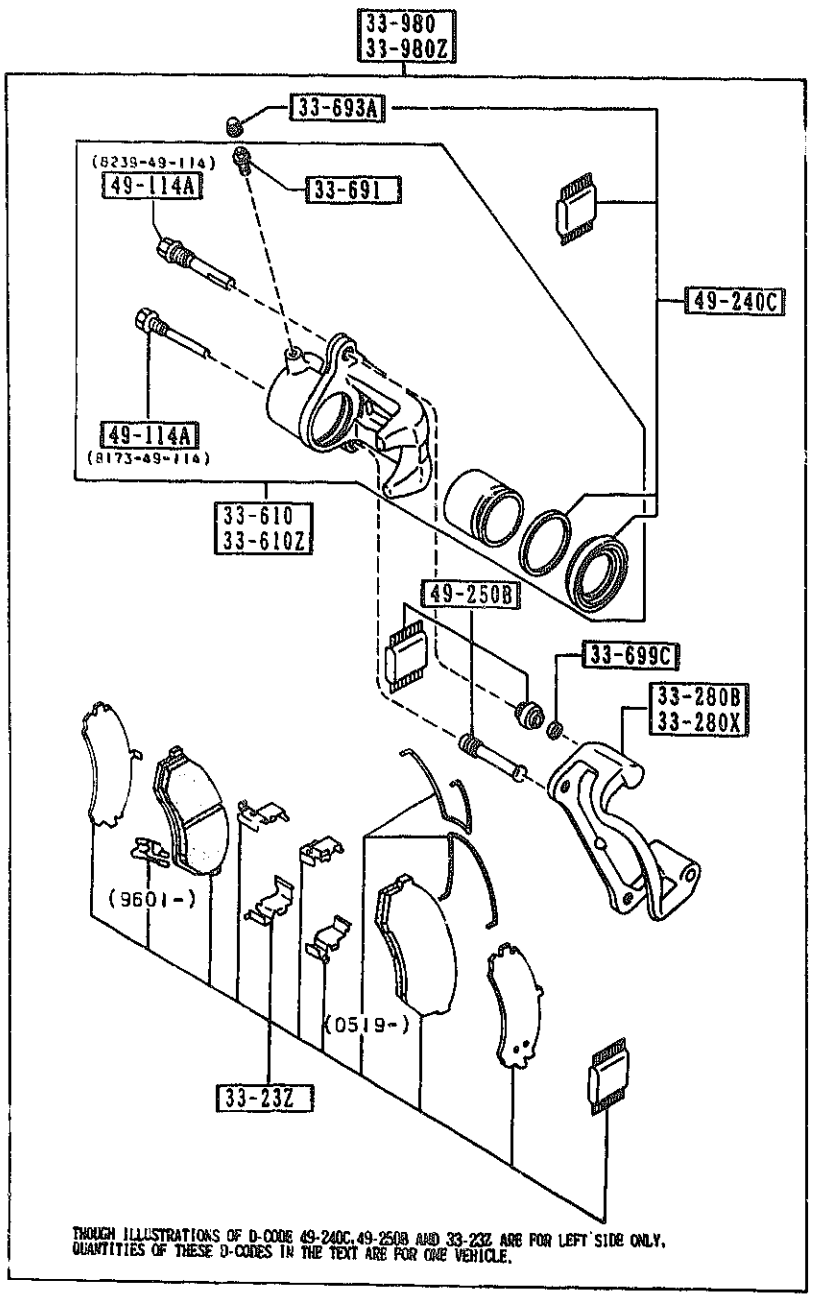

THOUGH ILLUSTRATIONS OF D-CODE 49-240C,49-250B AND 33-23Z ARE FOR LEFT SIDE ONLY. QUANTITIES OF THESE D-CODES IN THE TEXT ARE FOR ONE VEHICLE.

PART NO.	QTY	MODEL/RESTRICTION	MODEL/RESTRICTION	MODEL/RESTRICTION	FROM-TO
33-23Z		PAD SET,FRT CALIPER			
NAY1-33-23Z	1				-9601
A (NAY1-33-23ZA)					
NAY1-33-23ZA	1				9601-0519
NAY0-33-23ZA	1	NON ASBESTOS			0519-
33-280B		SUPPORT(R),MOUNTING			
NA01-33-281	1				
33-280X		SUPPORT(L),MOUNTING			
NA01-33-291	1				
33-610		BODY & PISTON(R),CALIPER			
NA01-33-61X	1				
33-610Z		BODY & PISTON(L),CALIPER			
NA01-33-71X	1				
33-691		SCREW,BLEEDER			
B001-33-691	2				
33-693A		CAP,BLEEDER SCREW			
0259-33-693	2				
33-699C		PIN,LOCK			
NA01-33-699	2				-9615
33-980		CALIPER(R),FRT BRAKE			
*NA01-33-980	1				-0519
A (NA01-33-980A)					
*NA01-33-980A	1				0519-
33-980Z		CALIPER(L),FRT BRAKE			
*NA01-33-990	1				-0519
A (NA01-33-990A)					
*NA01-33-990A	1				0519-
49-114A		PIN,SLIDER			
8173-49-114	2				
8239-49-114	2				

9601 NA35##-106797
9615 NA35##-109485
0519 NA35##-152765

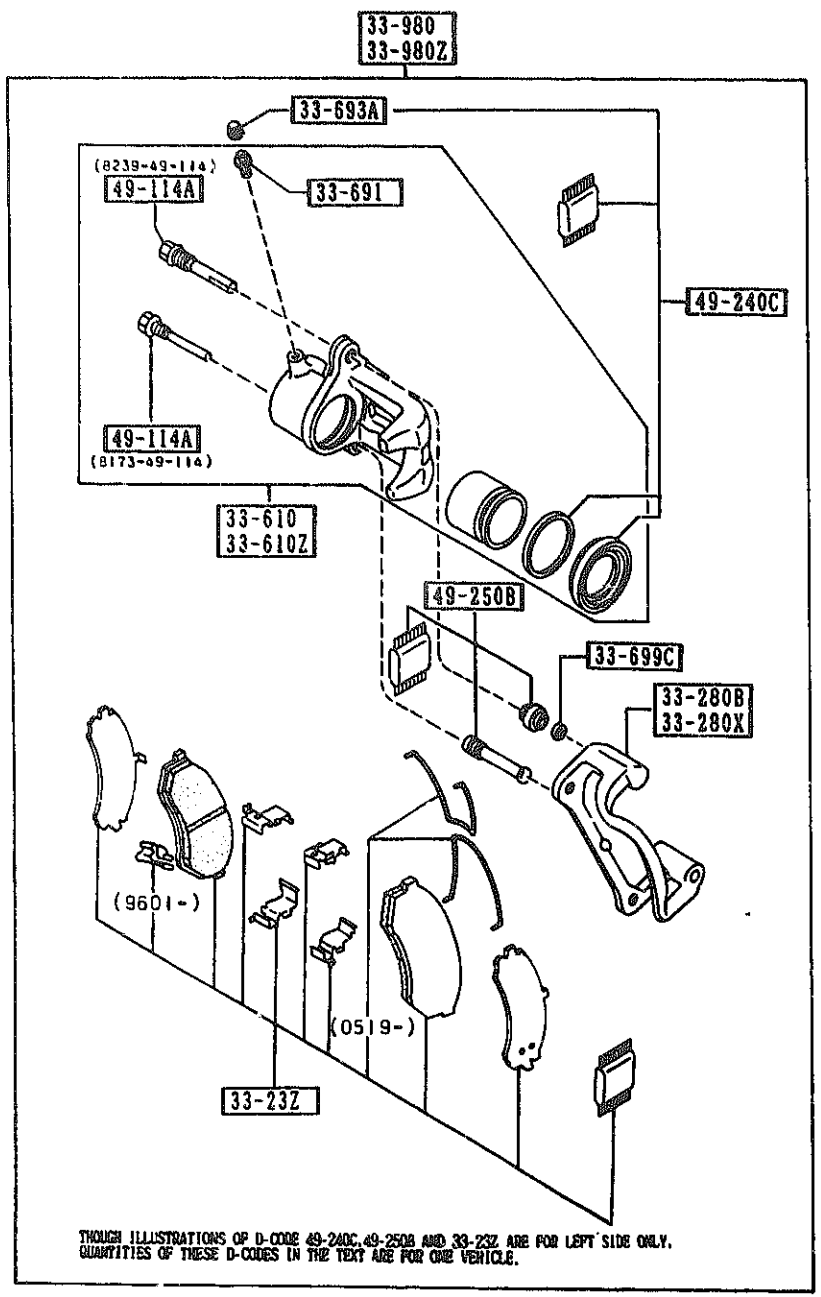

THOUGH ILLUSTRATIONS OF D-CODE 49-240C,49-250B AND 33-23Z ARE FOR LEFT SIDE ONLY, QUANTITIES OF THESE D-CODES IN THE TEXT ARE FOR ONE VEHICLE.

PART NO.	QTY	MODEL/RESTRICTION	MODEL/RESTRICTION	MODEL/RESTRICTION	FROM-TO
49-240C		SEAL KIT,CALIPER-FRT			
NAY1-33-24Z	1				
49-250B		BOOT KIT,FRT CALIPER			
NAY1-33-25Z	1				

3400 -1 FRONT SUSPENSION MECHANISMS

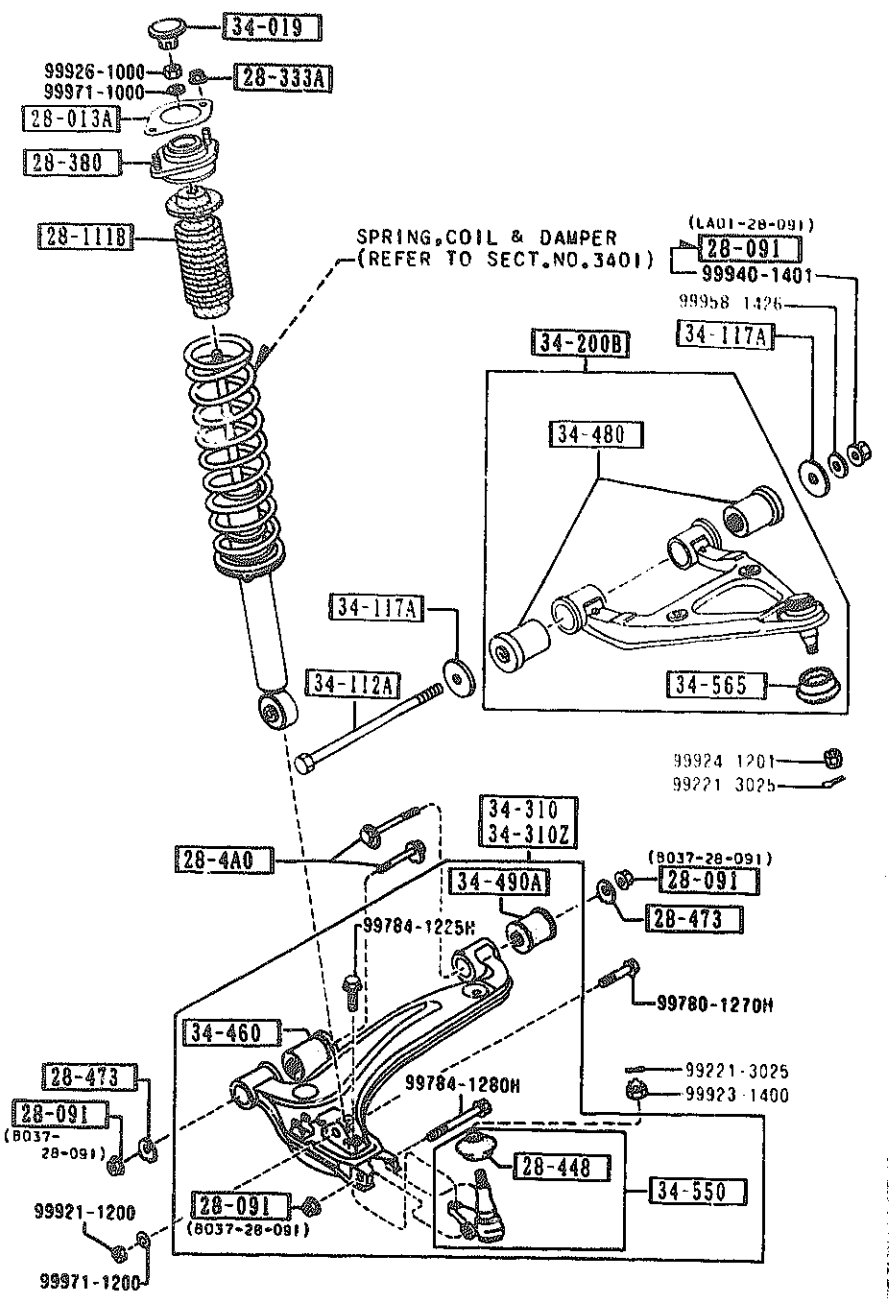

PART NO.	QTY	MODEL/RESTRICTION	MODEL/RESTRICTION	MODEL/RESTRICTION	FROM-TO
28-013A		SHEET,RUBBER			
G030-28-013A	2				9411-
28-091		NUT			
B037-28-091	6				
LA01-28-091	2				9405-
28-111B		STOPPER,BUMP			
NA01-28-111	2				
28-333A		NUT,FLANGE			
H001-28-333	4				
28-380		RUBBER,MOUNTING			
NA01-28-380A	2				
28-4A0		BOLT,ADJUST			
NA01-28-4A0	4				
28-448		SEAL,DUST-BALL JOINT			
H266-28-448	2				
28-473		PLATE,CAM-SUB FRAME			
NA01-28-473	4				
34-019		CAP,DAMPER			
NA01-34-019	2				
34-112A		BOLT			
NA01-34-112	2				
34-117A		WASHER			
NA01-34-117A	4				
34-200B		ARM,UPPER-FRT			
NA01-34-200 A (NA01-34-200A)	2				-9511
NA01-34-200A	2				9511-
34-310		ARM(R),LOWER			
NA01-34-300A	1				

9405 NA35##-100118
9411 NA35##-100333
9511 NA35##-103176

3400 FRONT SUSPENSION MECHANISMS

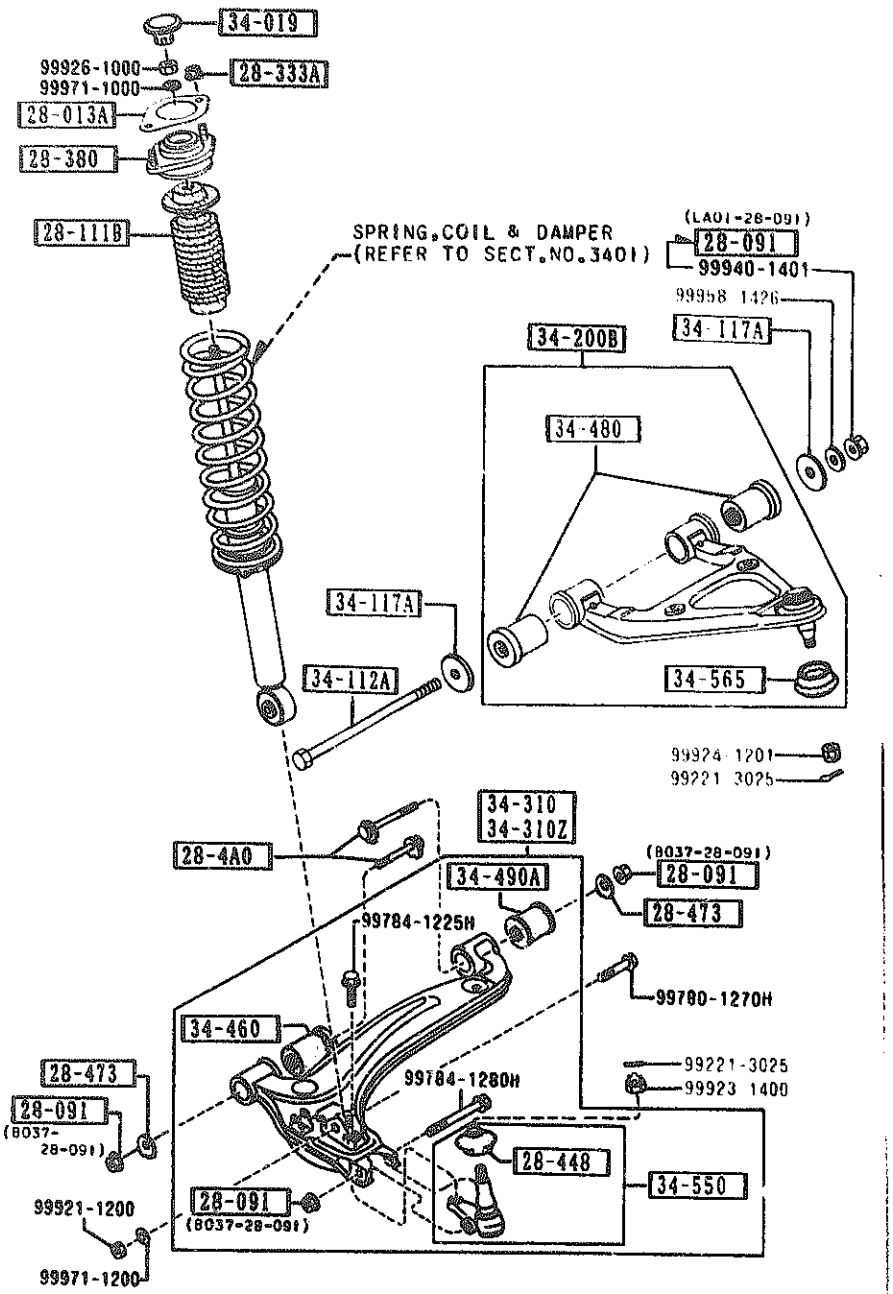

PART NO.	QTY	MODEL/RESTRICTION	MODEL/RESTRICTION	MODEL/RESTRICTION	FROM-TO
34-310Z		ARM(L),LOWER			
NA01-34-350A	1				
34-460		BUSH,RUBBER-LWR ARM			
NA01-34-460A	2				
34-480		BUSHING,RUBBER-LOWER ARM			
NA01-34-480	4				-9511
NA01-34-480A	4				9511-
34-490A		BUSHING,RUBBER			
NA01-34-490	2				
34-550		BALL JOINT,LOWER			
NA01-34-550	2				
34-565		SEAL,DUST			
NA01-34-568	2				

9511 NA35##-103176

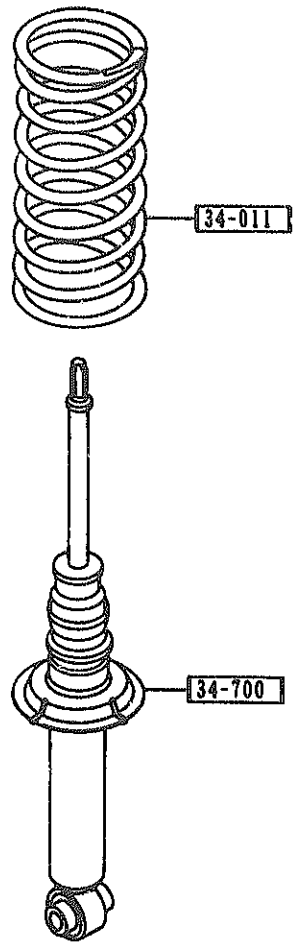

3401 -1 M FRONT SPRING & DAMPER

PART NO.	QTY	MODEL/RESTRICTION	MODEL/RESTRICTION	MODEL/RESTRICTION	FROM-TO
34-011		SPRING,COIL-FRONT			
NA01-34-011A	2	(MT)			
NA03-34-011	2	(AT)			
34-700		DAMPER,FRONT			
NA01-34-700	2				

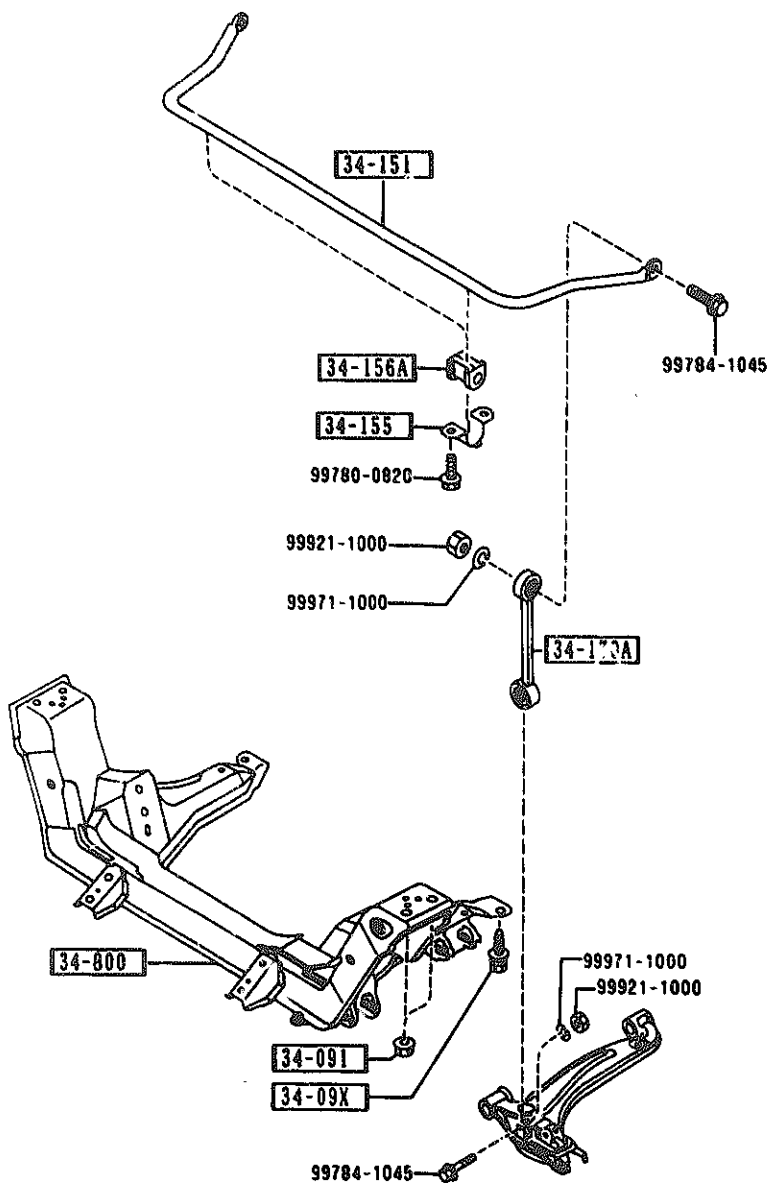

PART NO.	QTY	MODEL/RESTRICTION	MODEL/RESTRICTION	MODEL/RESTRICTION	FROM-TO
34-09X		BOLT			
NA01-34-09XA	4				
34-091		NUT			
FB01-34-091	4				
34-151		STABILIZER,FRONT			
NA01-34-151A	1				
34-155		PLATE,STABILIZER			
FB01-34-155	2				
34-156A		RUBBER,STAB -FRT			
NA01-34-156A	2				
34-170A		LINK,CONTROL-STAB			
NA01-34-170	2				
34-800		MEMBER,CROSS			
NA01-34-800	1				-9330
A (NA01-34-800A)					
NA01-34-800A	1				9330-

9330 NA35##-100072

SECTION NAME INDEX (CHASSIS)

LO.NO	SEC.NO	SECTION NAME
1-C11	2505	REAR PROPELLER SHAFT
1-D11	2550	REAR DRIVE SHAFT
1-E11	2600	REAR AXLE
1-F11	2610	REAR BRAKE MECHANISMS
1-H11	2710	REAR DIFFERENTIALS (NORMAL DIFF.)
1-L11	2710 A	REAR DIFFERENTIALS (LIMITED SLIP DIFF.)
1-D12	2800	REAR SUSPENSION MECHANISMS
1-E12	2801	REAR SPRING & DAMPER
1-F12	2810	REAR STABILIZER
1-G12	2830	REAR LOWER ARMS & SUB FRAME
1-I12	3200	STEERING WHEEL
1-L12	3210	STEERING COLUMN & SHAFTS
1-M12	3220	STEERING GEAR (W/O POWER STEERING)
1-C13	3220 A	STEERING GEAR (W/ POWER STEERING)
1-F13	3240	POWER STEERING SYSTEM
1-H13	3300	FRONT AXLE
1-I13	3310	FRONT BRAKE MECHANISMS
1-K13	3400	FRONT SUSPENSION MECHANISMS
1-M13	3401	FRONT SPRING & DAMPER
1-N13	3410	CROSSMEMBER & STABILIZER
1-C14	3700	TIRES & JACK
1-C15	3900	ENGINE & T/MISSION MOUNTINGS
1-D15	4000	EXHAUST SYSTEM
1-F15	4140	CLUTCH RELEASE & MASTER CYLINDERS (MANUAL TRANSMISSION)
1-G15	4145	CLUTCH PIPINGS (MANUAL TRANSMISSION)
1-H15	4160	ACCELERATOR CONTROL SYSTEM
1-I15	4200	FUEL TANK
1-M15	4300	CLUTCH & BRAKE PEDALS (MANUAL TRANSMISSION)
1-D16	4300A	BRAKE PEDALS (AUTOMATIC TRANSMISSION)
1-F16	4340	BRAKE MASTER CYLINDER & POWER BRAKE
1-H16	4360	BRAKE PIPINGS
1-J16	4400	PARKING BRAKE SYSTEM
1-L16	4500	FUEL PIPINGS
2-C03	4600	CHANGE CONTROL SYSTEM (AT)



CATLOG-NO= AUNA01-07

DATE. 1992-02

3700 -1 TIRES & JACK

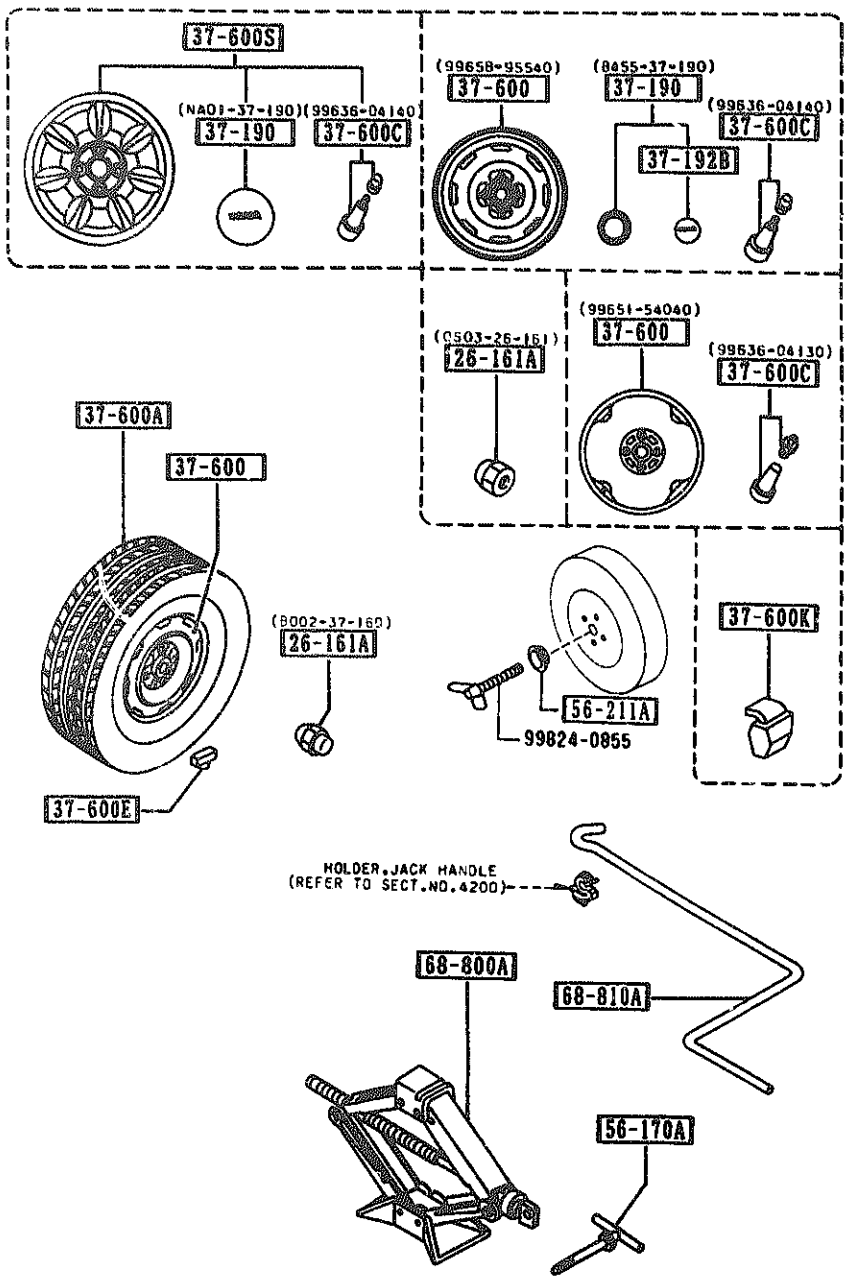

PART NO.	QTY	MODEL/RESTRICTION	MODEL/RESTRICTION	MODEL/RESTRICTION	FROM-TO
26-161A		NUT,HUB			
0603-26-161	16	NON BRIGHT			
B002-37-160	16	PLATED			
37-190		CAP,CENTER			
B455-37-190	4				
NA01-37-190	4				
37-192B		EMBLEM,CENTER			
B001-37-192	4				
37-600		WHEEL,DISC STEEL			
99658-95540	4	5.5JJX14 P=100/0=45			
99651-54040	1	4TX14 P=100/0=45			
37-600A		TIRE			
90620-47614	1	T155/70D14			
90623-06684	4	P185/60R14			
90624-26684	4	P185/60R14			9A01-
37-600C		VALVE,AIR			
99636-04130	1	TR413			
99636-04140	4	TR414			
37-600E		WEIGHT,DISC WHEEL-STEEL			
99655-30005	4	5G			
99655-30010	4	10G			
99655-30015	4	15G			
99655-30020	4	20G			
99655-30025	4	25G			

9A01 NA3S**-122908

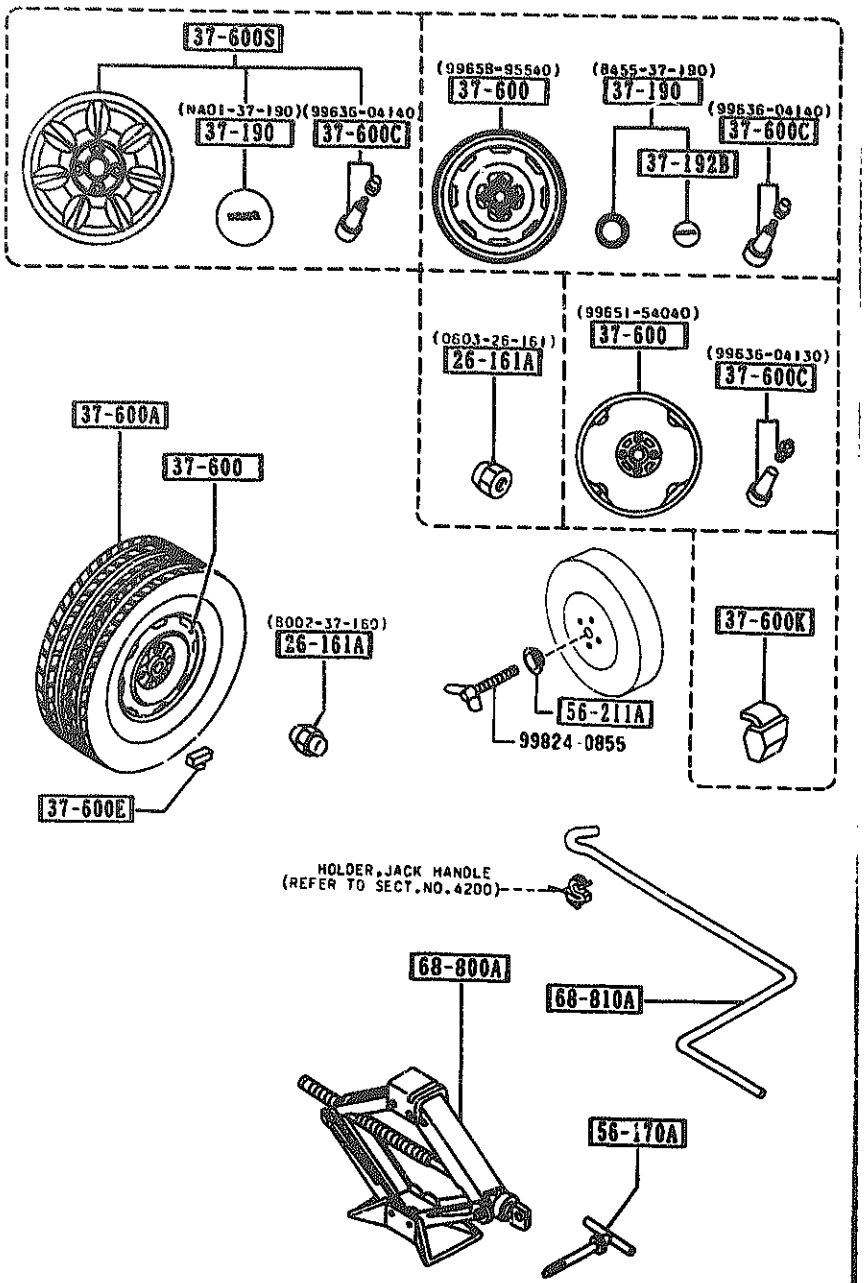

PART NO.	QTY	MODEL/RESTRICTION	MODEL/RESTRICTION	MODEL/RESTRICTION	FROM-TO
CONT'D					
99655-30030	4	30G			
99655-30035	4	35G			
99655-30040	4	40G			
99655-30045	4	45G			
99655-30050	4	50G			
99655-30055	4	55G			
99655-30060	4	60G			
| 37-600K |		WEIGHT,DISC WHEEL-ALUMI			
99655-90005	4	5G FOR 1-PIECE WHL			
99655-90010	4	10G FOR 1-PIECE WHL			
99655-90015	4	15G FOR 1-PIECE WHL			
99655-90020	4	20G FOR 1-PIECE WHL			
99655-90025	4	25G FOR 1-PIECE WHL			
99655-90030	4	30G FOR 1-PIECE WHL			
99655-90035	4	35G FOR 1-PIECE WHL			
99655-90040	4	40G FOR 1-PIECE WHL			
99655-90045	4	45G FOR 1-PIECE WHL			
99655-90050	4	50G FOR 1-PIECE WHL			
99655-90055	4	55G FOR 1-PIECE WHL			
99655-90060	4	60G FOR 1-PIECE WHL			
| 37-600S |		WHEEL SET,DISC-ALUMI			
8BN1-37-600	4	5.5JJX14 NKK MAKE			
8BN3-37-600	4	5.5JJX14 ENKEI MAKE			0201-

0201 NA35###-137180

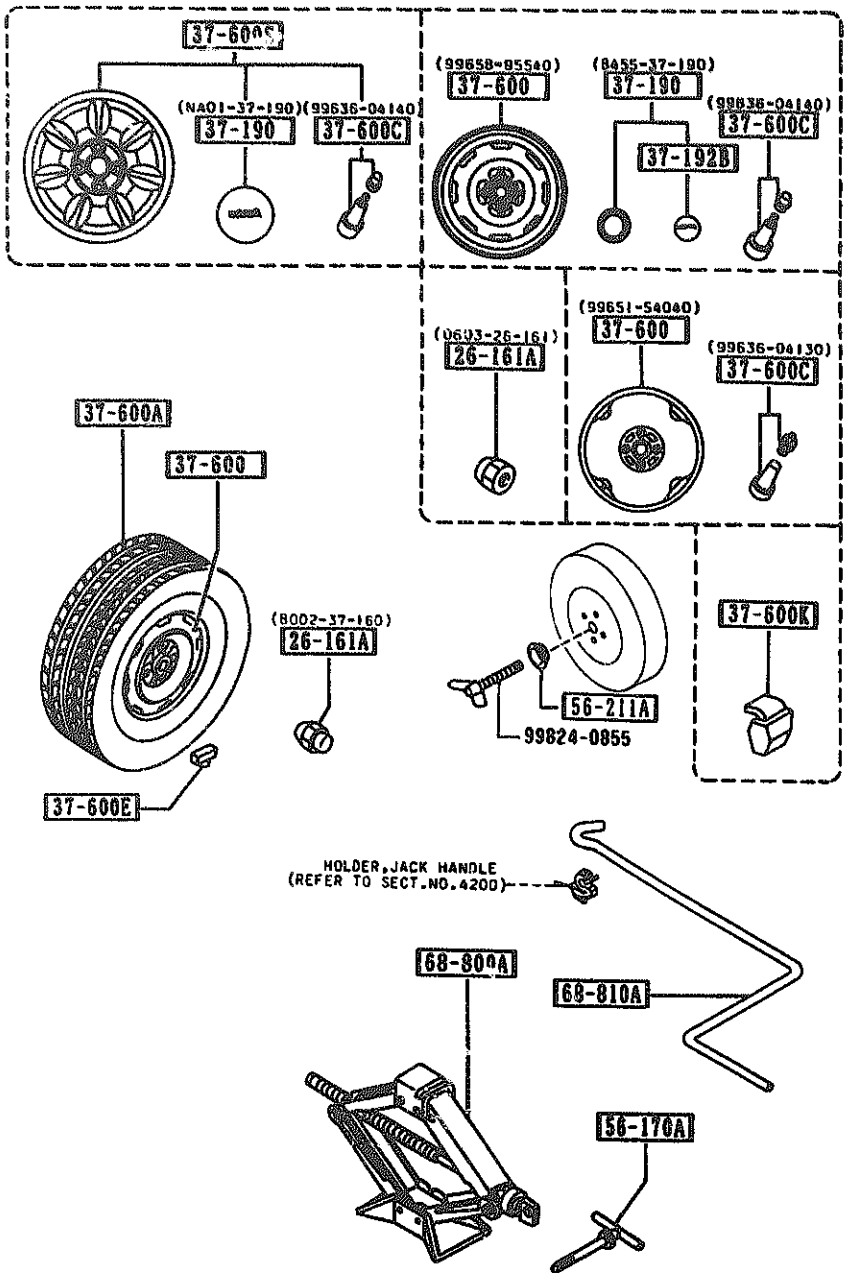

PART NO.	QTY	MODEL/RESTRICTION	MODEL/RESTRICTION	MODEL/RESTRICTION	FROM-TO
56-170A		BOLT,JACK SET			
B001-56-170C	1				
56-211A		PLATE,CLAMP-JACK			
1219-56-211	1				
68-800A		JACK			
B455-37-790 A (B455-37-790A)	1				-9901
B455-37-790A	1				9901-
68-810A		HANDLE,JACK			
GJ21-37-810	1				

9901 NA35##-119257

SECTION NAME INDEX (CHASSIS)

LO.NO	SEC.NO	SECTION NAME
1-C11	2505	REAR PROPELLER SHAFT
1-D11	2550	REAR DRIVE SHAFT
1-E11	2600	REAR AXLE
1-F11	2610	REAR BRAKE MECHANISMS
1-H11	2710	REAR DIFFERENTIALS (NORMAL DIFF.)
1-L11	2710 A	REAR DIFFERENTIALS (LIMITED SLIP DIFF.)
1-D12	2800	REAR SUSPENSION MECHANISMS
1-E12	2801	REAR SPRING & DAMPER
1-F12	2810	REAR STABILIZER
1-G12	2830	REAR LOWER ARMS & SUB FRAME
1-K12	3200	STEERING WHEEL
1-L12	3210	STEERING COLUMN & SHAFTS
1-M12	3220	STEERING GEAR (W/O POWER STEERING)
1-C13	3220 A	STEERING GEAR (W/ POWER STEERING)
1-F13	3240	POWER STEERING SYSTEM
1-N13	3300	FRONT AXLE
1-I13	3310	FRONT BRAKE MECHANISMS
1-K13	3400	FRONT SUSPENSION MECHANISMS
1-M13	3401	FRONT SPRING & DAMPER
1-N13	3410	CROSSMEMBER & STABILIZER
1-C14	3700	TIRES & JACK
1-C15	3900	ENGINE & T/MISSION MOUNTINGS
1-D15	4000	EXHAUST SYSTEM
1-F15	4140	CLUTCH RELEASE & MASTER CYLINDERS (MANUAL TRANSMISSION)
1-G15	4145	CLUTCH PIPINGS (MANUAL TRANSMISSION)
1-H15	4160	ACCELERATOR CONTROL SYSTEM
1-I15	4200	FUEL TANK
1-M15	4300	CLUTCH & BRAKE PEDALS (MANUAL TRANSMISSION)
1-D16	4300A	BRAKE PEDALS (AUTOMATIC TRANSMISSION)
1-F16	4340	BRAKE MASTER CYLINDER & POWER BRAKE
1-H16	4360	BRAKE PIPINGS
1-J16	4400	PARKING BRAKE SYSTEN
1-L16	4500	FUEL PIPINGS
2-C03	4600	CHANGE CONTROL SYSTEM (AT)

CATLOG-NO= AUNA01-07

DATE. 1992-0

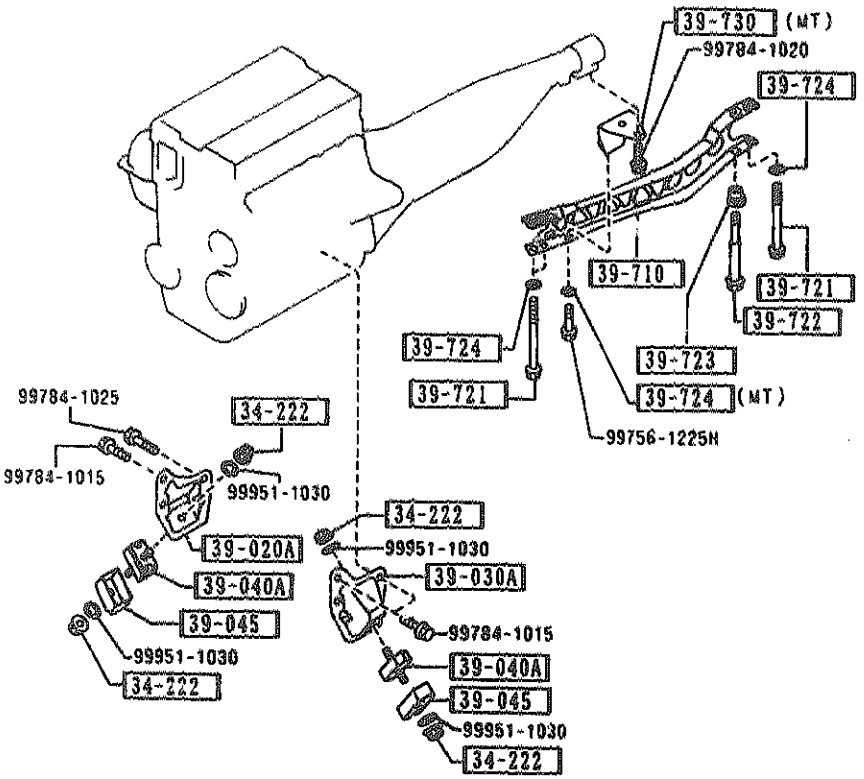

PART NO.	QTY	MODEL/RESTRICTION	MODEL/RESTRICTION	MODEL/RESTRICTION	FROM-TO
34-222		NUT			
8871-34-222	4				
39-020A		BRACKET(R),ENGINE			
NA01-39-020	1				
39-030A		BRACKET(L),ENGINE			
NA01-39-030	1				
39-040A		RUBBER,ENGINE MT.			
NA01-39-040	2				
39-045		CASING,STOPPER			
NA01-39-041	2	(MT)			
S231-39-041	2	(AT)			
39-710		FRAME,POWER PLANT			
NA01-39-710	1	(MT)			
NA03-39-710	1	(AT)			
39-721		BOLT,PLANT FRAME			
NA01-39-721	3				
39-722		BOLT,PLANT FRAME			
NA01-39-722	1				
39-723		SPACER,PLANT FRAME			
NA01-39-723	1				
39-724		WASHER,PLAIN-FRAME			
NA01-39-724	3	(AT)			
	4	(MT)			
39-730		BRACKET,PLANT FRAME			
NA01-39-730 A (NA01-39-730A)	1				-9407
NA01-39-730A	1	(MT)			9407-

9407 NA35##-100180

4000 -1 EXHAUST SYSTEM

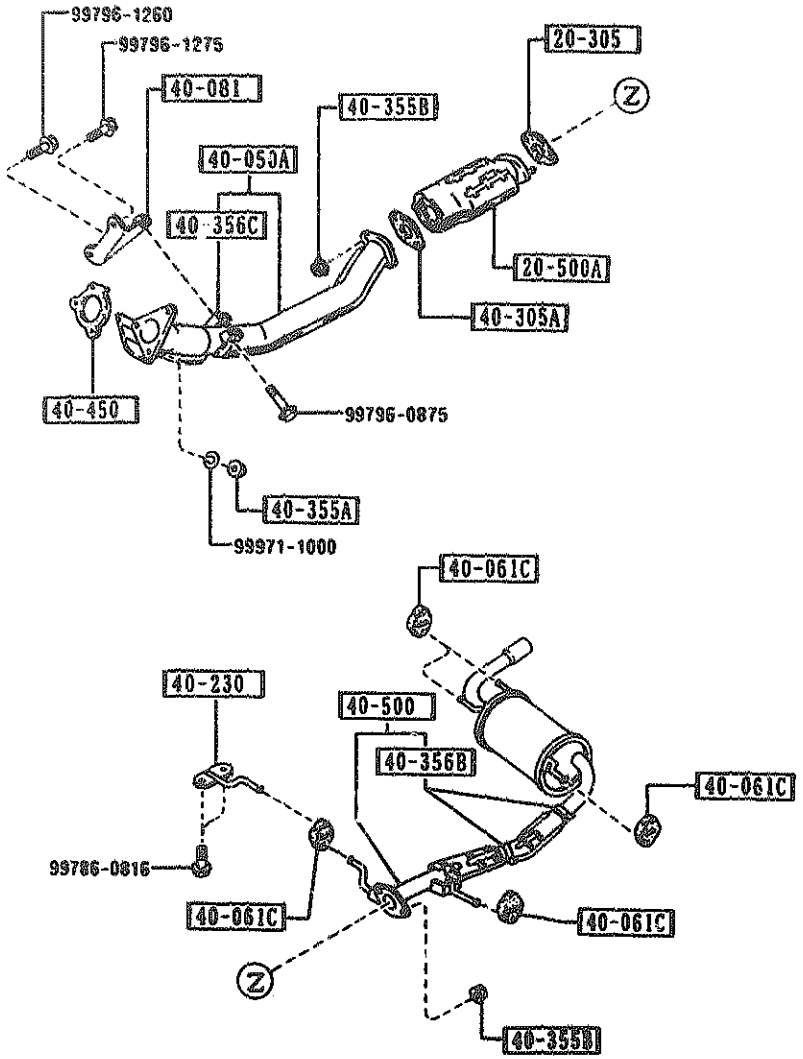

PART NO.	QTY	MODEL/RESTRICTION	MODEL/RESTRICTION	MODEL/RESTRICTION	FROM-TO
20-305 B690-40-305	1	GASKET,EXH.PIPE-CONVERTER NON ASBESTOS			
20-500A B61P-20-600	1	CONVERTER,CATALYST			
40-050A B690-40-500A	1	PIPE,EXHAUST-FRONT			
40-061C RF03-40-061	5	HANGER,SILENCER			
40-081 B690-40-080A	1	BRACKET,HANGER			
40-230 B690-40-690	1	BRACKET,HANGER			
40-305A B322-40-305	1	GASKET NON ASBESTOS			
40-355A 2158-40-355	3	NUT			
40-355B JE10-40-355	4	NUT			
40-356B B6A5-40-356	2	BAND			
40-356C B690-40-356	1	BAND			
40-450 B690-40-450	1	GASKET,CONVERTER NON ASBESTOS			
40-500 B690-40-100D A (B690-40-100E)	1	SILENCER,MAIN			-9820

9820 NA35***-128848

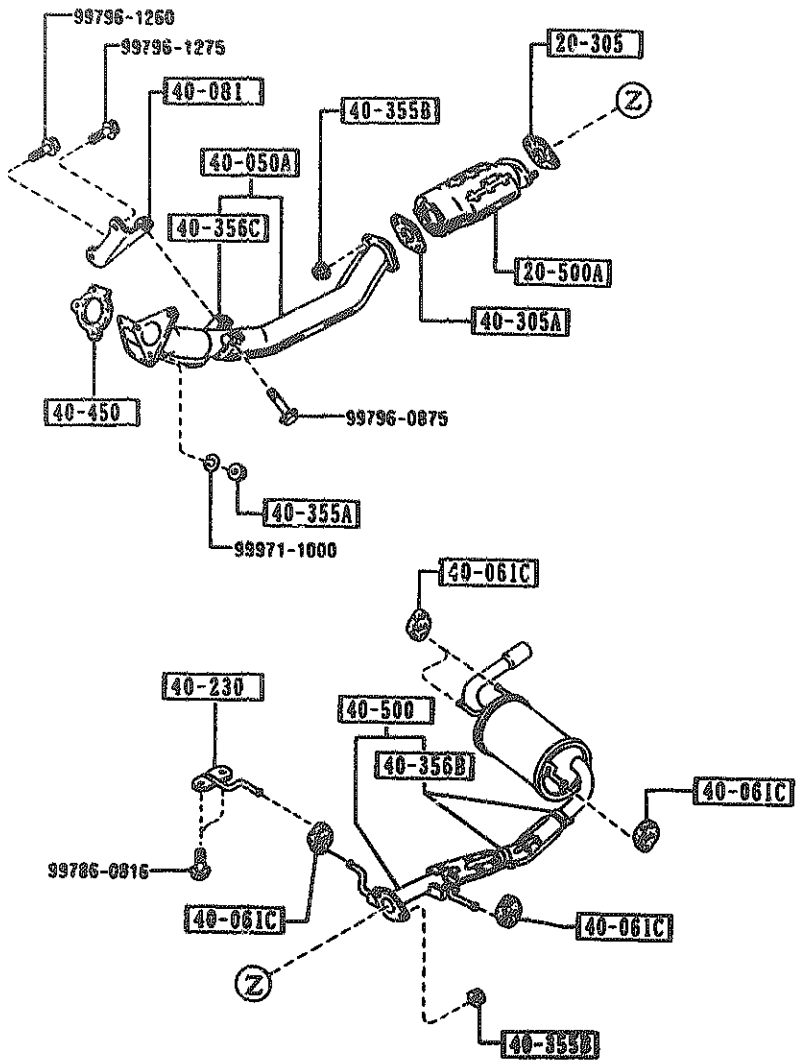

PART NO.	QTY	MODEL/RESTRICTION	MODEL/RESTRICTION	MODEL/RESTRICTION	FROM-TO
CONT'D					
B684-40-100A A (B684-40-100B)	1				-0401
B690-40-100E A (B690-40-100F)	1				9B20-0401
B684-40-100B	1	(AT)			0401-
B690-40-100F	1	(MT)			0401-

9B20 NA35##-128848
0401 NA35##-146561

4140 -1 # CLUTCH RELEASE & MASTER CYLINDERS (MANUAL TRANSMISSION)

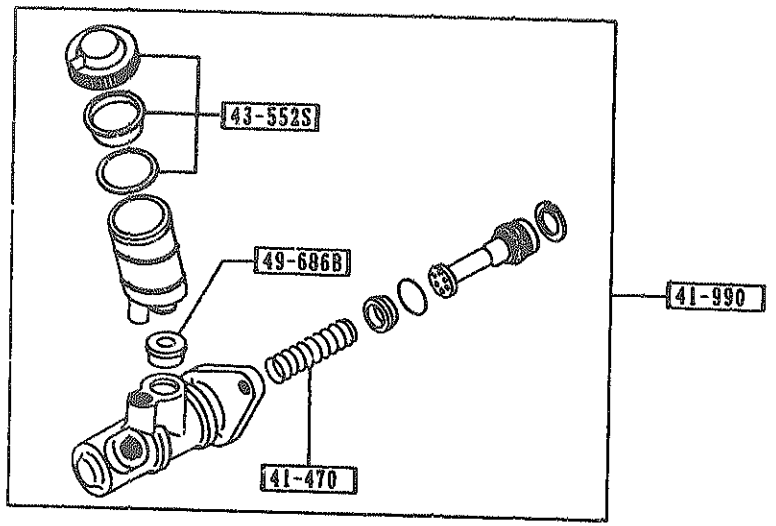

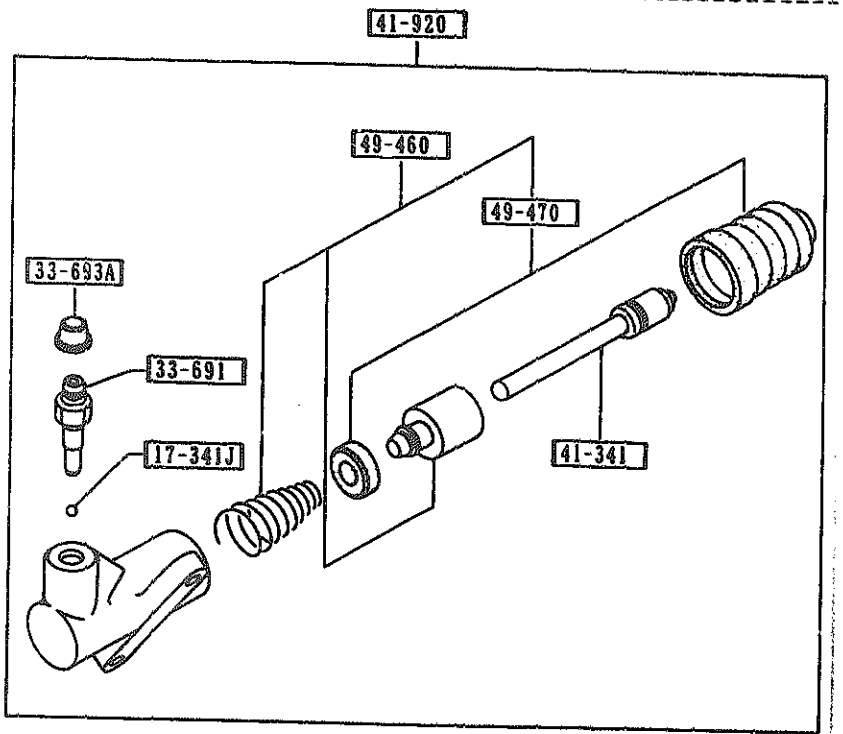

PART NO.	QTY	MODEL/RESTRICTION	MODEL/RESTRICTION	MODEL/RESTRICTION	FROM-TO
17-341J 99611-1500	1	BALL,STEEL			
33-691 0259-33-691	1	SCREW,BLEEDER			
33-693A 0259-33-693	1	CAP,BLEEDER SCREW			
41-341 H266-41-341	1	ROD,PUSH			
41-470 B312-41-470	1	SPRING			
41-920 HE29-41-920A	1	CYL.,CLUTCH RELEASE			-9701
NA01-41-920	1				9701-
41-990 NA01-41-400A	1	CYL.,CLUTCH MASTER			
43-552S B093-49-580	1	CAP SET,RESERVE TANK			
49-460 H005-49-460	1	PARTS KIT,INNER			
49-470 H005-49-470	1	SEAL KIT			
49-686B 0305-49-686B	1	BUSH,ELBOW JOINT			

9701 NA35NM-111969

4145 -1 ※ CLUTCH PIPINGS (MANUAL TRANSMISSION)

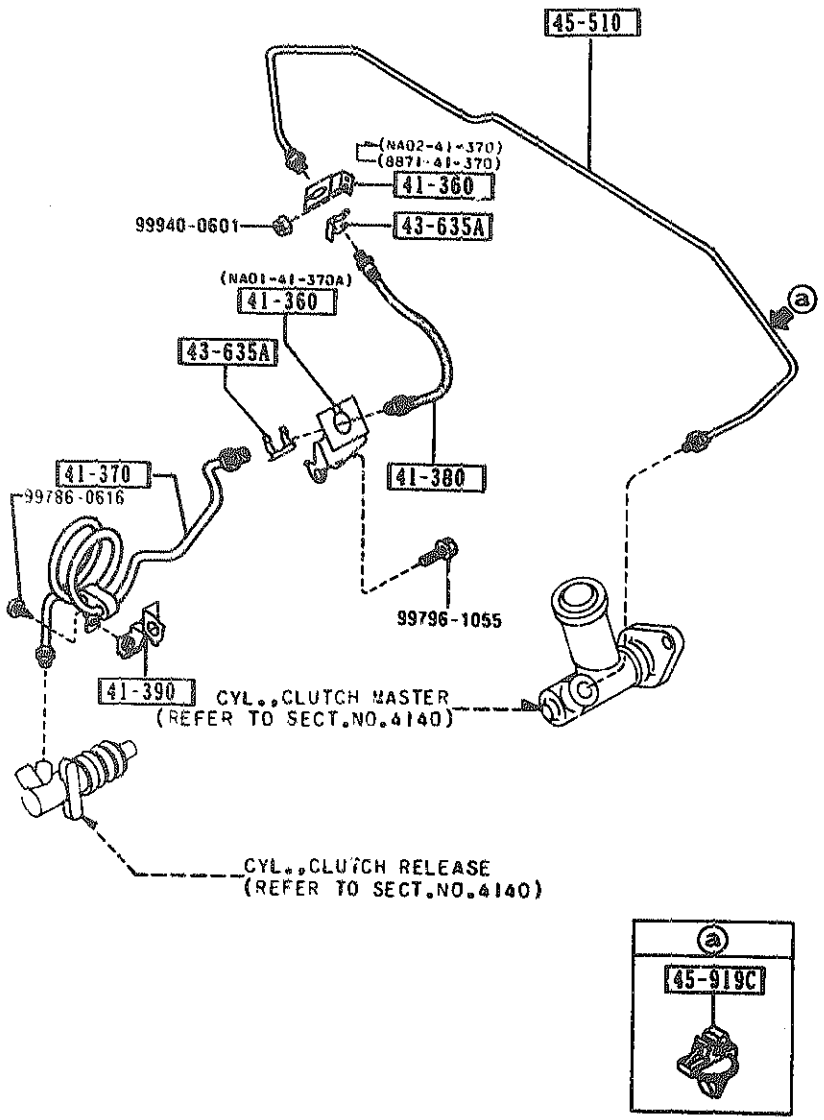

PART NO.	QTY	MODEL/RESTRICTION	MODEL/RESTRICTION	MODEL/RESTRICTION	FROM-TO
41-360		HOLDER,CLUTCH			
NA01-41-370A	1	SUMINO KOGYO			
8871-41-370	1				-0701
NA02-41-370	1	MIDORI			0701-
41-370		PIPE,CLUTCH			
NA01-41-360A	1				
41-380		HOSE,FLEXIBLE			
GK67-41-380A	1				
41-390		HOLDER,PIPE			
NA01-41-390	1				
43-635A		CLIP,FLEXIBLE HOSE			
0136-43-635	2				
45-510		PIPE,CLUTCH			
NA01-45-510B AN(NA01-45-510C)	1				-9601
NA01-45-510C	1				9601-
45-919C		CLIP,PIPE			
G030-45-919	1				

9601 NA35※※-106797
0701 NA35※※-200041

4160 -1 N ACCELERATOR CONTROL SYSTEM

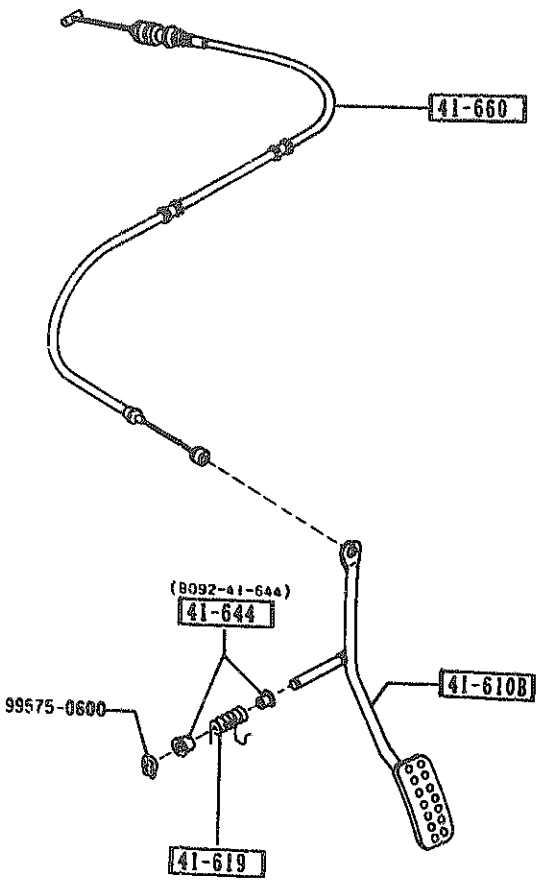

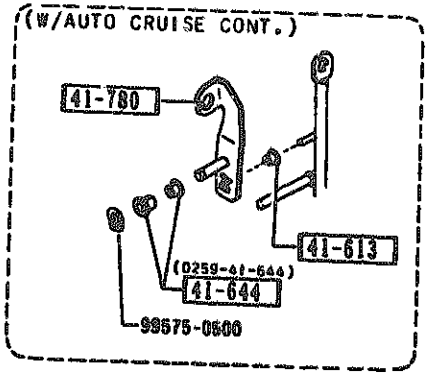

PART NO.	QTY	MODEL/RESTRICTION	MODEL/RESTRICTION	MODEL/RESTRICTION	FROM-TO
41-610B		PEDAL & ARM			
NA01-41-610A (NA01-41-610A)	1				-0701
NA02-41-610A (NA02-41-610A)	1				-0701
NA01-41-610A	1	BASE, (W/O AUTO CRUISE CONT.)			0701~
NA02-41-610A	1	PKG-OPT, (W/AUTO CRUISE CONT)			0701~
41-613		ROLLER			
B104-41-114	1	PKG-OPT, (W/AUTO CRUISE CONT)			
41-619		SPRING,RETURN			
NA01-41-619	1				
41-644		BUSH			
B092-41-644	2	OIRES KOGYO			
0259-41-644	2	ONDO KOSAKUSHO PKG-OPT, (W/AUTO CRUISE CONT)			
41-660		CABLE,ACCEL.			
NA01-41-660A	1				
41-780		LEVER,ACCELERATOR			
NA01-41-130A	1	PKG-OPT, (W/AUTO CRUISE CONT)			

0701 NA3SNM-200041

4200 -1 FUEL TANK

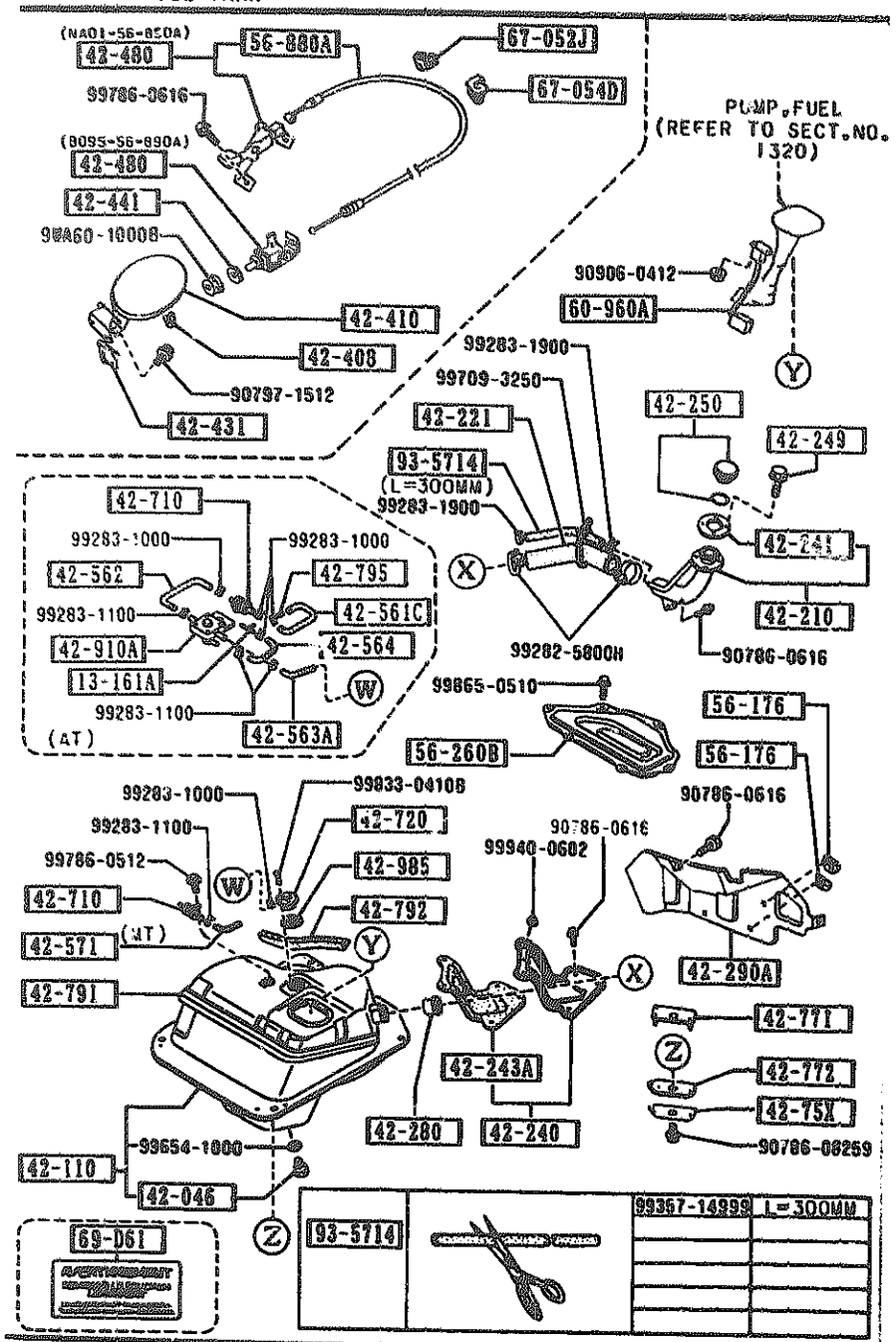

PART NO.	QTY	MODEL/RESTRICTION	MODEL/RESTRICTION	MODEL/RESTRICTION	FROM-TO
13-161A		JOINT'T'			
E580-13-161	1	(AT)			
42-046		PLUG,DRAIN			
8C88-42-065	1				
42-110		TANK,FUEL			
NA03-42-110	1	(4T)			
NA01-42-110 A (NA01-42-110A)	1				-9601
NA01-42-110A	1	(MT)			9601-
42-210		PIPE,FILLER			
NA01-42-210 CG(NA01-42-210A)	1				-9901
NA01-42-210A	1				9901-
42-221		HOSE,FILLER			
NA01-42-241	1				-9901
NA01-42-241A AN(NA01-42-241B)	1				9901-0101
NA01-42-241B	1				0101-
42-240		COVER,DUST			
NA01-42-230	1				
42-241		GASKET,FILLER PIPE			
0866-42-366B	1				
42-243A		GASKET'A',DUST COVER			
NA01-42-233	1				
42-249		BOLT,FILLER PIPE			
NA01-42-249 AN(NA01-42-249A)	6				-0222
NA01-42-249A AN(NA01-42-249B)	4				0222-0701
NA01-42-249B	4				0701-
42-250		CAP,FILLER			
NA02-42-250	1				

NA01-42-210
CG NA01-42-210A
H260-42-270

9601 NA35HH-106797
9901 NA35HH-119257
0101 NA35HH-133591
0222 NA35HH-160861
0701 NA35HH-200041

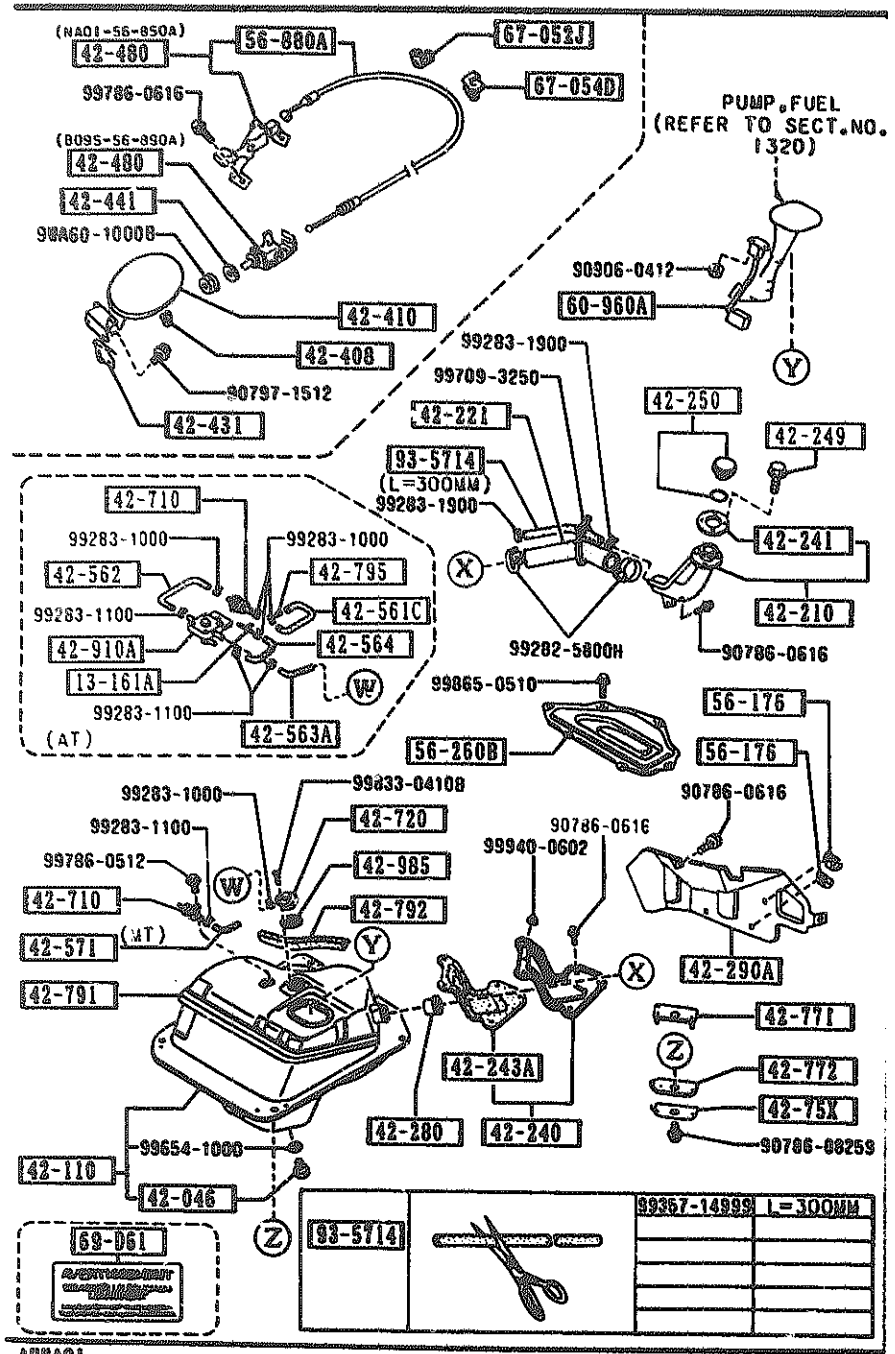

PART NO.	QTY	MODEL/RESTRICTION	MODEL/RESTRICTION	MODEL/RESTRICTION	FROM-TO
42-280		VALVE,NON RETURN			
GB53-42-270	1				-9901
N260-42-270	1				9901-
42-290A		PROTECTOR'A',FILLER PIPE			
NA01-42-291A	1				
42-408		STOPPER,FILLER LID			
0187-70-491	2				
42-410		LID,FUEL FILLER			
NA01-42-410 AN(NA01-42-410A)	1				-9B01
NA01-42-410A	1				9B01-
42-431		SPRING LIFT,LID			
H043-42-431D	1				
42-441		WASHER,LID OPENER			
NA01-56-896	1				
42-480		OPENER,FILLER LID			
NA01-56-850A	1				
B095-56-890A	1				
42-561C		HOSE NO.1,BREATHER			
NA03-42-561	1	(AT)			
42-562		HOSE NO.2,BREATHER			
NA03-42-562	1	(AT)			
42-563A		HOSE NO.3,BREATHER			
NA03-42-563	1	(AT)			
42-564		HOSE NO.4,BREATHER			
NA03-42-564	1	(AT)			
42-571		HOSE,VENT			
NA01-42-561	1	(MT)			

9901 NA35MM-119257
9801 NA35MM-126490

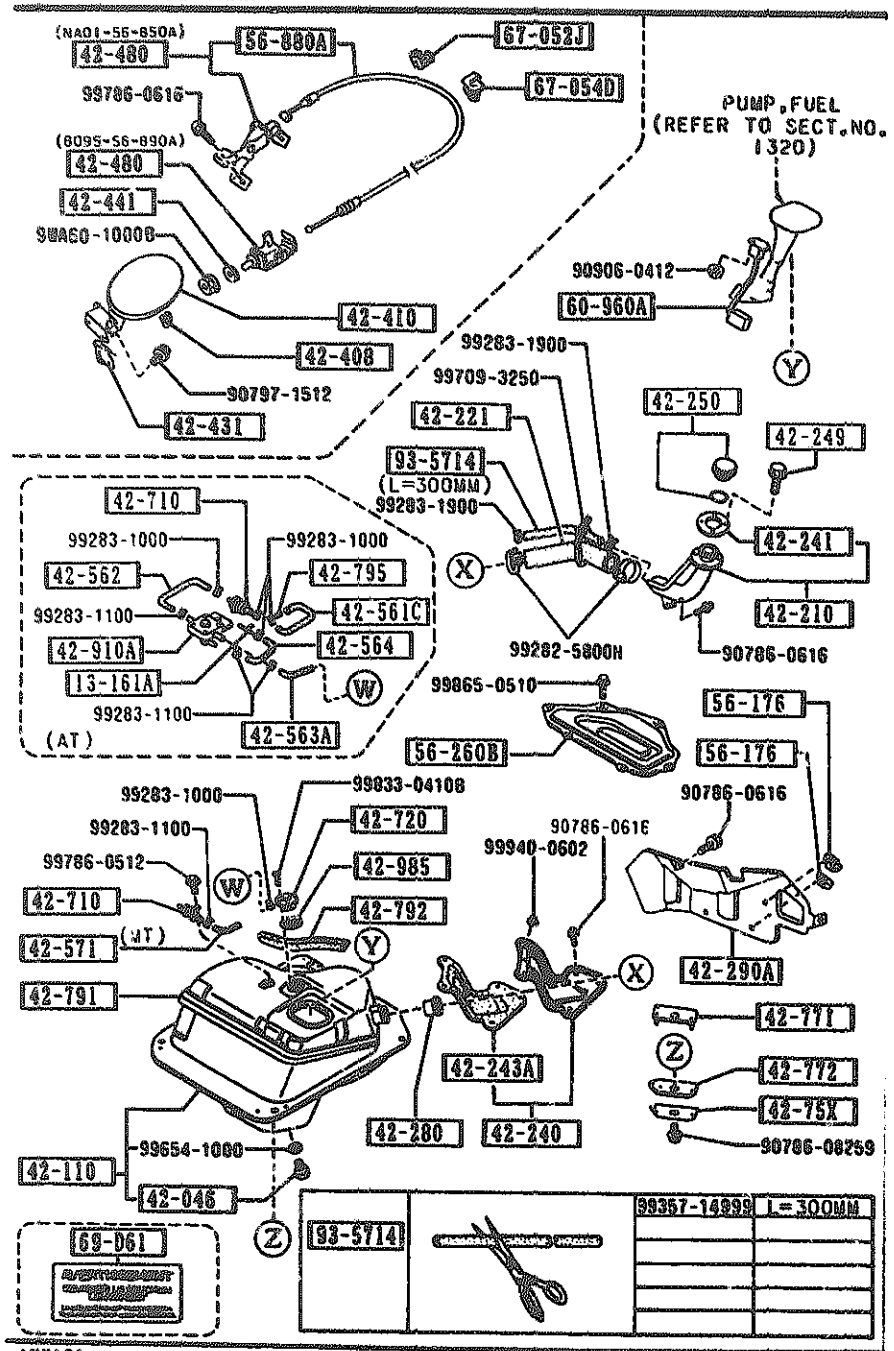

AUNA01

PART NO.	QTY	MODEL/RESTRICTION	MODEL/RESTRICTION	MODEL/RESTRICTION	FROM-TO
42-710		VALVE,CHECK			
M260-42-9108	1				
42-720		VALVE,FUEL VAPOR.			
FB01-42-980	1				
42-75X		REINF.,FUEL TANK			
NA01-42-77X	4				
42-771		RUBBER(UP),MOUNT-TANK			
NA01-42-771	4				
42-772		RUBBER(LWR),MOUNT-TANK			
NA01-42-772	4				
42-791		PAD,FUEL TANK			
NA01-42-761	1				
42-792		PAD,FUEL TANK			
NA01-42-762	1				
42-795		INSERT			
GN51-42-795	1	(AT)			
42-910A		VALVE'A',CHECK-BREATHER			
NA03-42-910	1	(AT)			
42-985		GASKET,VAPOR VALVE			
FB01-42-985	1				
56-176		HOLDER,JACK HANDLE			
G030-56-176	3				
56-260B		COVER,GAUGE-FUEL TANK			
NA01-56-260	1				
56-880A		CABLE,F/LID OPENER			
NA01-56-890A	1				
60-960A		GAUGE,FUEL TANK			
NA01-60-960	1				

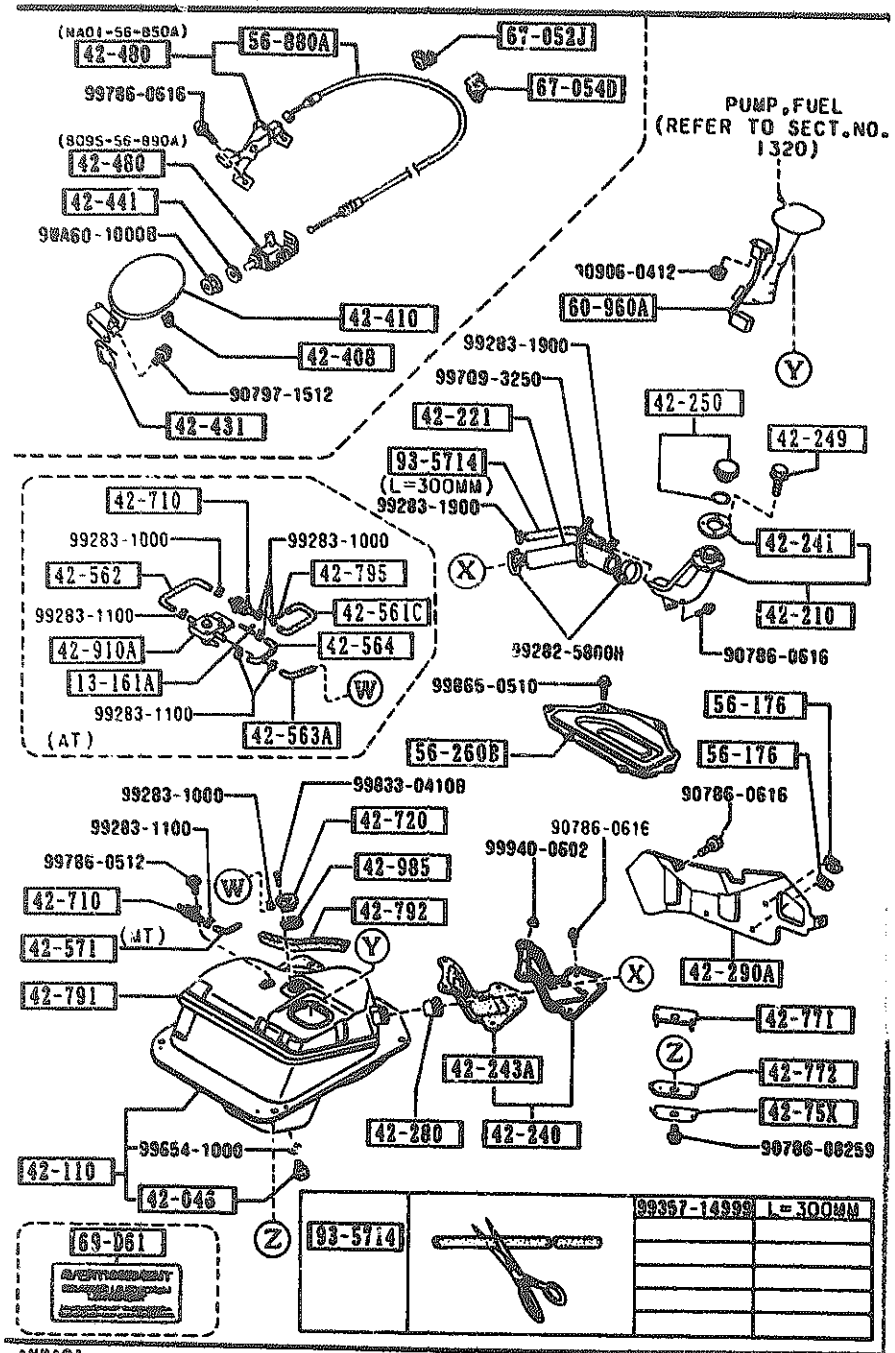

AUNA01

PART NO.	QTY	MODEL/RESYRICTION	MODEL/RESTRICTION	MODEL/RESTRICTION	FROM-TO
67-052J		CLIP			
8001-67-051	1				
67-054D		CLIP			
N260-67-054	2				
69-D61		LABEL,FUEL WARNING			
KA10-69-D61	1				
93-5714		HOSE			
99357-14999	1				

CAT. AUNA01-07

1992-02

4300 -1 CLUTCH & BRAKE PEDALS (MANUAL TRANSMISSION)

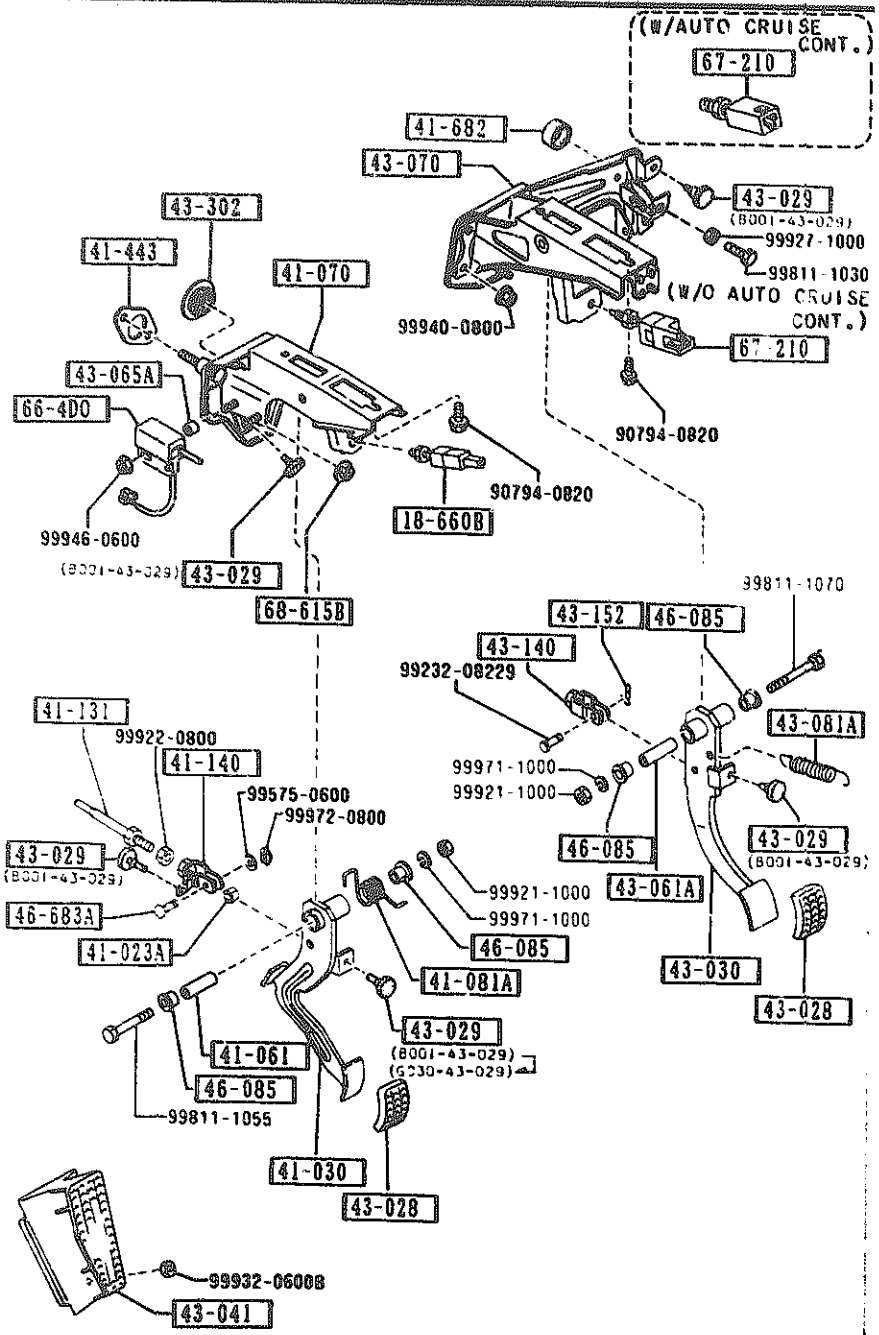

PART NO.	QTY	MODEL/RESTRICTION	MODEL/RESTRICTION	MODEL/RESTRICTION	FROM-TO
18-660B		SWITCH,CLUTCH			
LA01-66-490A	1				
41-023A		BUSH			
0727-41-023	1				
41-030		PEDAL,CLUTCH			
NA01-41-030B	1				
41-061		SPACER			
0727-41-061	1				
41-070		BRACKET,MASTER CYL.			
NA01-41-070A	1				
41-081A		SPRING,RETURN			
BR70-41-081	1				
41-131		ROD,PUSH			
0824-41-131	1				
41-140		FORK,CLUTCH			
NA01-41-140B	1				
41-443		GASKET			
NA01-41-443	1				
41-682		RUBBER,STOP			
1456-41-682	1	PKG-OPT, (W/AUTO CRUISE CONT)			
43-028		PAD,PEDAL			
B092-43-028	2				
43-029		RUBBER,STOPPER			
B001-43-029	5				-9901
BU01-43-029	4				9901-
G030-43-029	1				9901-
43-030		PEDAL,BRAKE			

9901 NA35**-119257

4300 CLUTCH & BRAKE PEDALS (MANUAL TRANSMISSION)

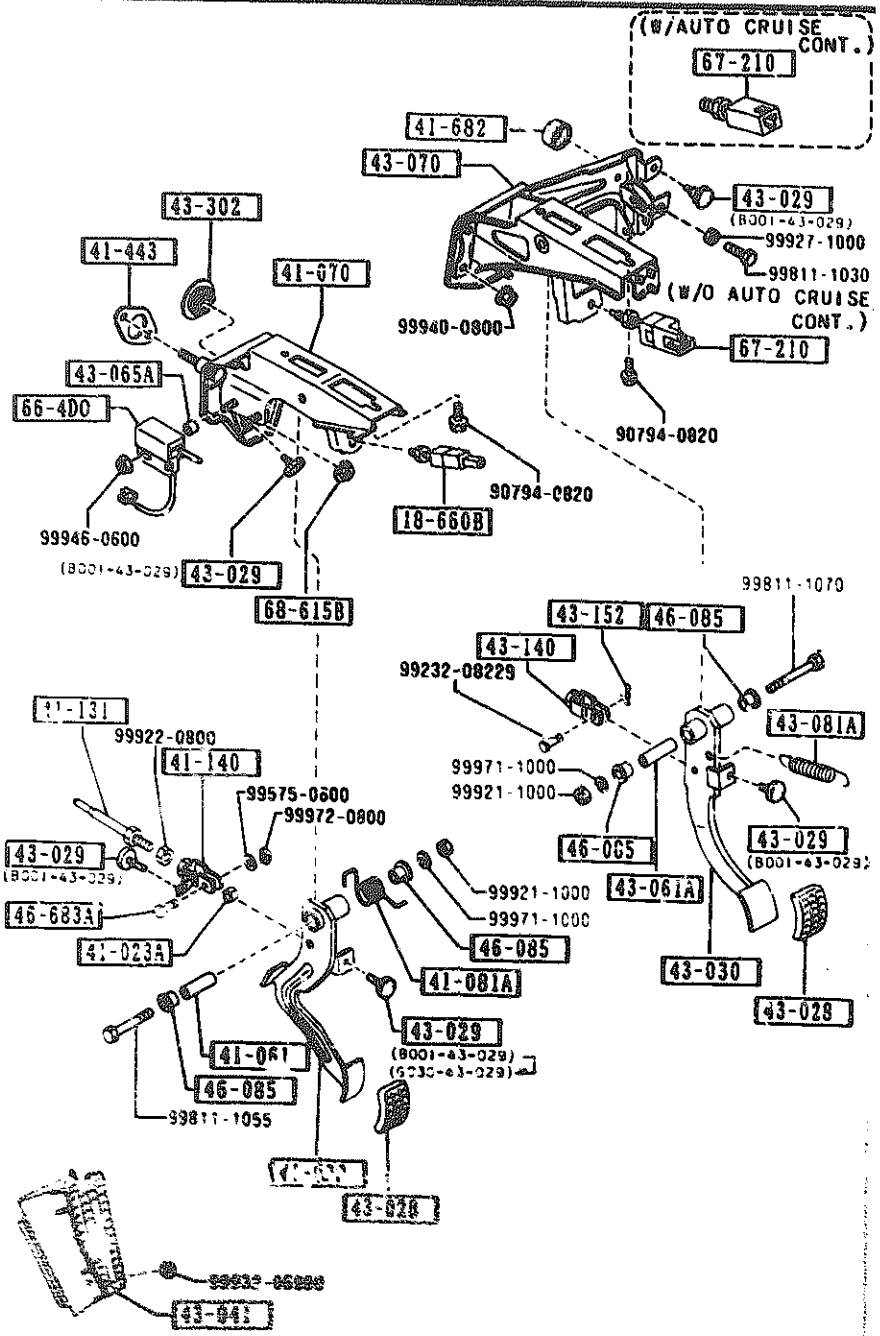

4300 -2 CLUTCH & BRAKE PEDALS (MANUAL TRANSMISSION)

PART NO.	QTY	MODEL/RESTRICTION	MODEL/RESTRICTION	MODEL/RESTRICTION	FROM-TO
CONT'D					
NA01-43-030	1				
43-041		REST,FOOT			
NA01-43-041	1				
43-061A		PIPE,PEDAL			
0866-43-062	1				
43-065A		SPACER			
BR70-43-065	2				
43-070		BRACKET,MASTER CYL.			
NA01-43-070A	1	BASE, (W/O AUTO CRUISE CONT.)			
NA02-43-070A	1	PKG-OPT, (W/AUTO CRUISE CONT)			
43-081A		SPRING,RETURN-BRAKE			
B092-41-081	1				
43-140		FORK,BRAKE			
1524-43-140	1				
43-152		PIN,SNAP			
D001-43-152	1				
43-302		GROMMET,BRAKE PEDAL			
B180-43-302	1				
46-085		BUSH			
1015-46-085	4				
46-683A		PIN			
0223-46-683	1				
66-4D0		SWITCH,CLUTCH CUT			
FB01-66-4D0	1				
67-210		SWITCH,LIGHT-BRAKE			
[illegible]	[illegible]	(W/AUTO CRUISE CONT)			

SECTION NAME INDEX (CHASSIS)

LO.NO	SEC.NO	SECTION NAME
1-C11	2505	REAR PROPELLER SHAFT
1-D11	2550	REAR DRIVE SHAFT
1-E11	2600	REAR AXLE
1-F11	2610	REAR BRAKE MECHANISMS
1-H11	2710	REAR DIFFERENTIALS (NORMAL DIFF.)
1-L11	2710 A	REAR DIFFERENTIALS (LIMITED SLIP DIFF.)
1-D12	2800	REAR SUSPENSION MECHANISMS
1-E12	2801	REAR SPRING & DAMPER
1-F12	2810	REAR STABILIZER
1-G12	2830	REAR LOWER ARMS & SUB FRAME
1-I12	3200	STEERING WHEEL
1-L12	3210	STEERING COLUMN & SHAFTS
1-M12	3220	STEERING GEAR (W/O POWER STEERING)
1-C13	3220 A	STEERING GEAR (W/ POWER STEERING)
1-F13	3240	POWER STEERING SYSTEM
1-N13	3300	FRONT AXLE
1-I13	3310	FRONT BRAKE MECHANISMS
1-K13	3400	FRONT SUSPENSION MECHANISMS
1-M13	3401	FRONT SPRING & DAMPER
1-N13	3410	CROSSMEMBER & STABILIZER
1-C14	3700	TIRES & JACK
1-C15	3900	ENGINE & T/MISSION MOUNTINGS
1-D15	4000	EXHAUST SYSTEM
1-F15	4140	CLUTCH RELEASE & MASTER CYLINDERS (MANUAL TRANSMISSION)
1-G15	4145	CLUTCH PIPINGS (MANUAL TRANSMISSION)
1-H15	4160	ACCELERATOR CONTROL SYSTEM
1-I15	4200	FUEL TANK
1-M15	4300	CLUTCH & BRAKE PEDALS (MANUAL TRANSMISSION)
1-D16	4300A	BRAKE PEDALS (AUTOMATIC TRANSMISSION)
1-F16	4340	BRAKE MASTER CYLINDER & POWER BRAKE
1-H16	4360	BRAKE PIPINGS
1-J16	4400	PARKING BRAKE SYSTEM
1-L16	4500	FUEL PIPINGS
2-C03	4600	CHANGE CONTROL SYSTEM (AT)

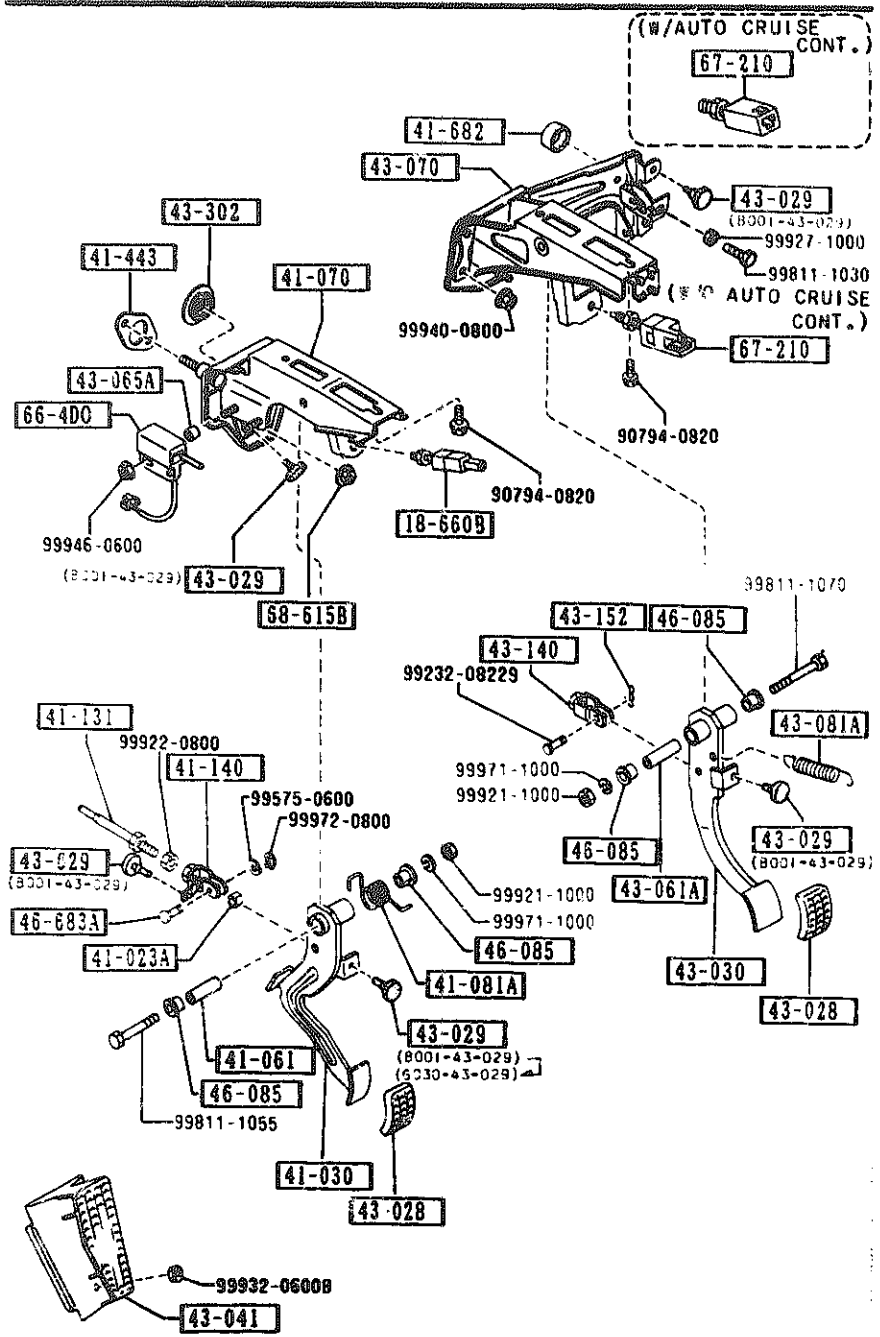

PART NO.	QTY	MODEL/RESTRICTION	MODEL/RESTRICTION	MODEL/RESTRICTION	FROM-TO
CONT'D					
B001-66-490A	1	BASE, (W/O AUTO CRUISE CONT.)			
68-615B		NUT,FLANGE-CAP			
B100-68-615	1				

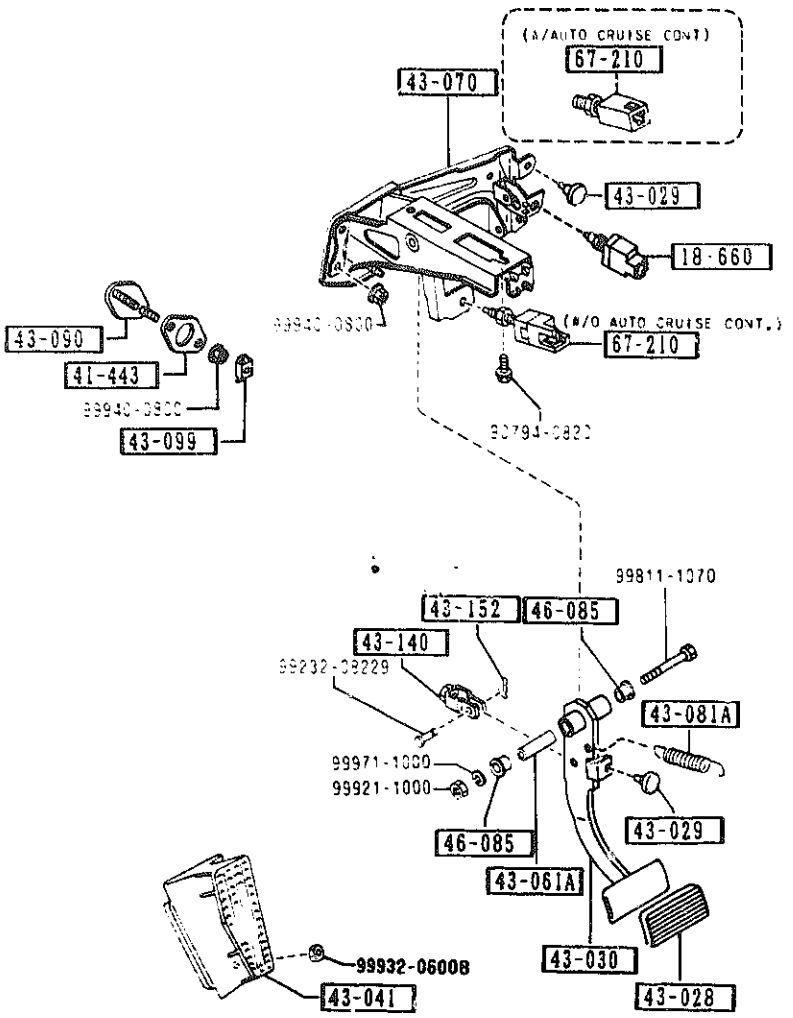

PART NO.	QTY	MODEL/RESTRICTION	MODEL/RESTRICTION	MODEL/RESTRICTION	FROM-TO
18-660		SWITCH,KICK DOWN			
M118-66-470	1				
41-443		GASKET			
NA01-41-443	1				
43-028		PAD,PEDAL			
0268-43-028	1				
43-029		RUBBER,STOPPER			
B001-43-029	2				
43-030		PEDAL,BRAKE			
NA03-43-030	1				
43-041		REST,FOOT			
NA01-43-041	1				
43-061A		PIPE,PEDAL			
0866-43-062	1				
43-070		BRACKET,MASTER CYL.			
NA01-43-070A	1	BASE, (W/O AUTO CRUISE CONT.)			
NA02-43-070A	1	PKG-OPT, (W/AUTO CRUISE CONT)			
43-081A		SPRING,RETURN-BRAKE			
B092-41-081	1				
43-090		PLATE			
NA03-43-090	1				
43-099		HOLDER,PLATE			
HF23-43-099	1				
43-140		FORK,BRAKE			
1524-43-140	1				
43-152		PIN,SNAP			

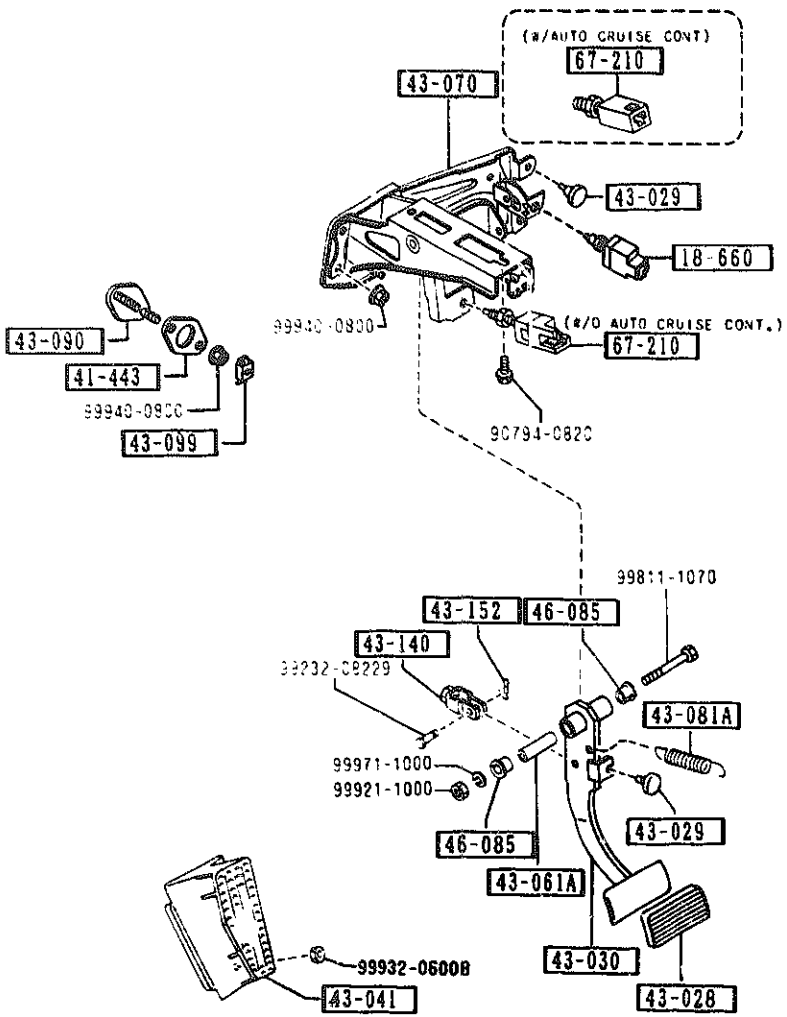

PART NO.	QTY	MODEL/RESTRICTION	MODEL/RESTRICTION	MODEL/RESTRICTION	FROM-TO
CONT'D					
D001-46-152	1				
46-085		BUSH			
1015-46-085	2				
67-210		SWITCH,LIGHT-BRAKE			
BR70-66-490A	1	PKG-OPT, (W/AUTO CRUISE CONT)			
B001-66-490A	1	BASE, (W/O AUTO CRUISE CONT.)			

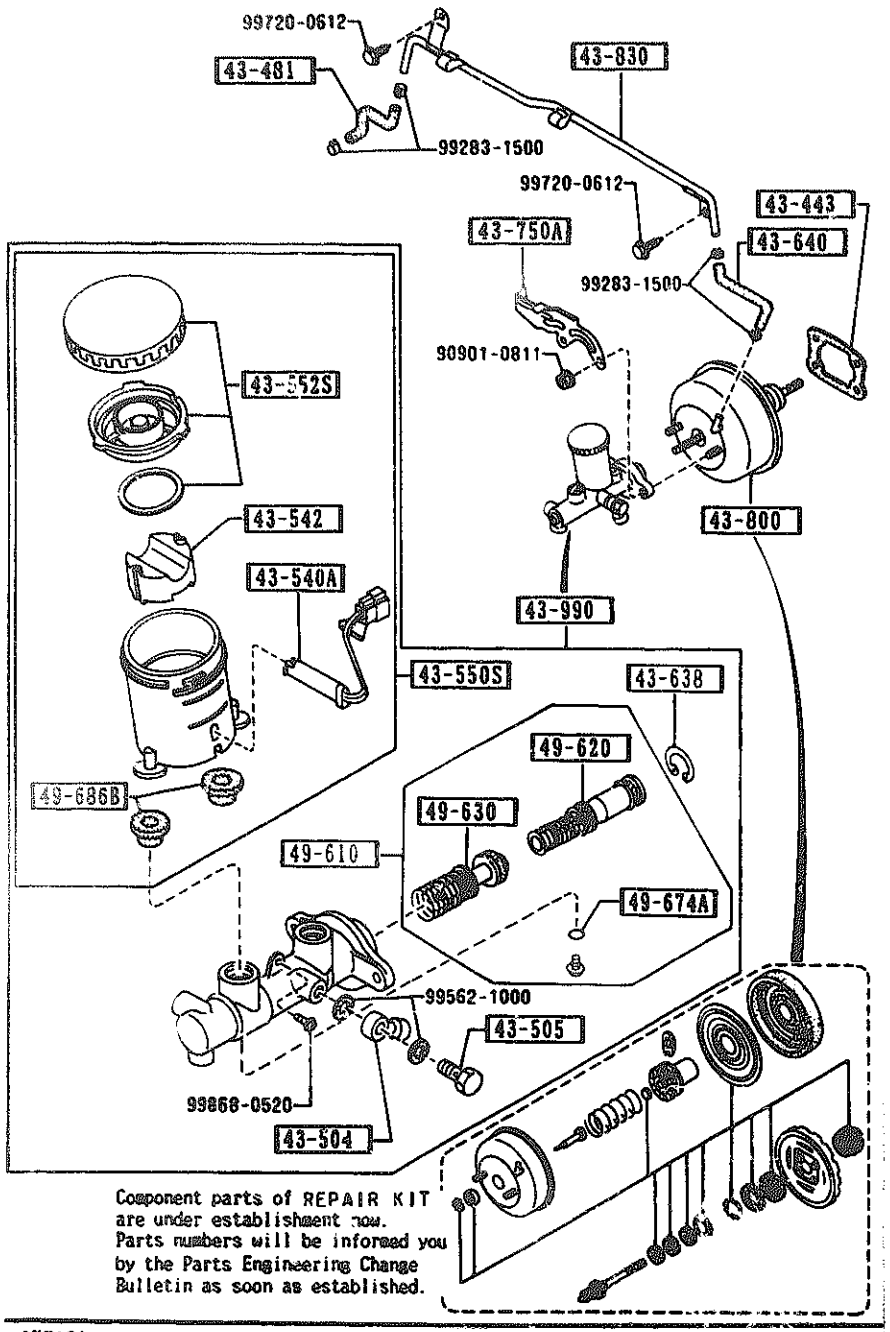

Component parts of REPAIR KIT are under establishment now. Parts numbers will be informed you by the Parts Engineering Change Bulletin as soon as established.

PART NO.	QTY	MODEL/RESTRICTION	MODEL/RESTRICTION	MODEL/RESTRICTION	FROM-TO
43-443 H001-43-443	1	GASKET,VAC POWER ASSIST NON ASBESTOS			
43-481 NA01-43-481	1	HOSE,VACUUM			
43-504 W023-43-504	1	JOINT,PIPE			
43-505 W023-43-505	1	BOLT,CONNECTOR			
43-540A GA97-43-540	1	SENSOR,RESERVE TANK			
43-542 3597-43-542	1	FLOAT			
43-550S B216-49-680 A (B216-49-680A)	1	TANK SET,RESERVE			-0701
B216-49-680A	1				0701-
43-552S D001-49-650 A (D001-49-650A)	1	CAP SET,RESERVE TANK			-0701
D001-49-650A	1				0701-
43-638 GA02-49-638	1	RING,RETAINING			
43-640 NA01-43-640	1	HOSE,VACUUM			
43-750A NA01-43-750	1	HOLDER,P.B.VALVE			
43-800 NA01-43-800	1	VACUUM POWER ASSIST			

0701 NA35##-200041

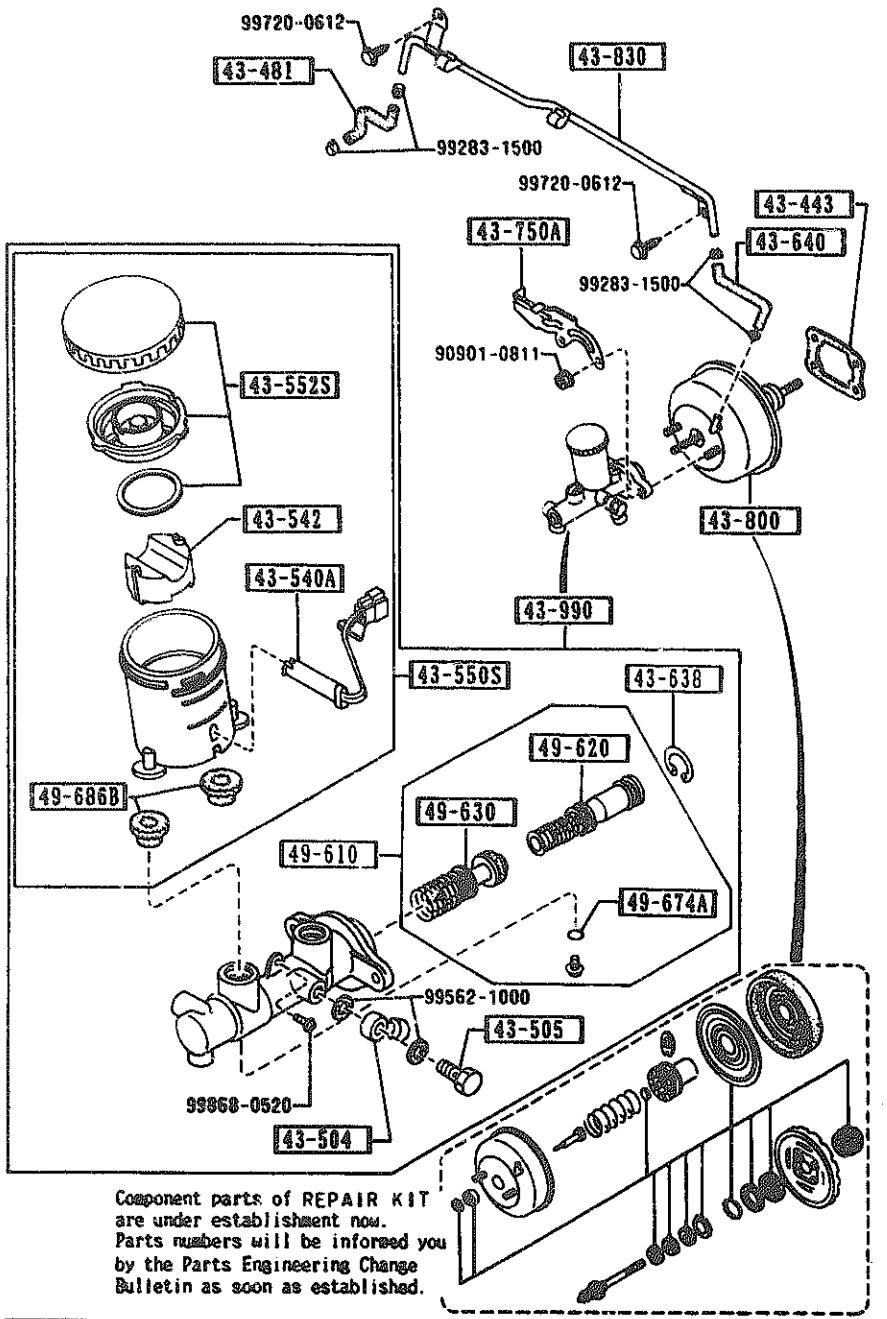

Component parts of REPAIR KIT are under establishment now. Parts numbers will be informed you by the Parts Engineering Change Bulletin as soon as established.

4340 -2 ※ BRAKE MASTER CYLINDER & POWER BRAKE

PART NO.	QTY	MODEL/RESTRICTION	MODEL/RESTRICTION	MODEL/RESTRICTION	FROM-TO
43-830		PIPE,VACUUM			
NA01-43-830A	1				
43-990		CYL.,TANDEM MASTER			
NA01-43-400C A (NA01-43-400D)	1				-0701
NA01-43-400D	1				0701-
49-610		PARTS KIT,INN.-BRAKE			
GJ21-43-61Z	1				-9801
BW0A-43-61Z	1				9801-
49-620		PISTON,PRIMARY			
GJ21-43-62Z	1				-9801
BW0A-43-62Z	1				9801-
49-630		PISTON,FLOATING			
BJ14-43-63Z	1				-9801
BW0A-43-63Z	1				9801-
49-674A		RING,'O'-MASTER CYL.			
99541-00403	1				
49-686B		BUSH,ELBOW JOINT			
0305-49-686B	2				

9801 NA35##-116316
0701 NA35##-200041

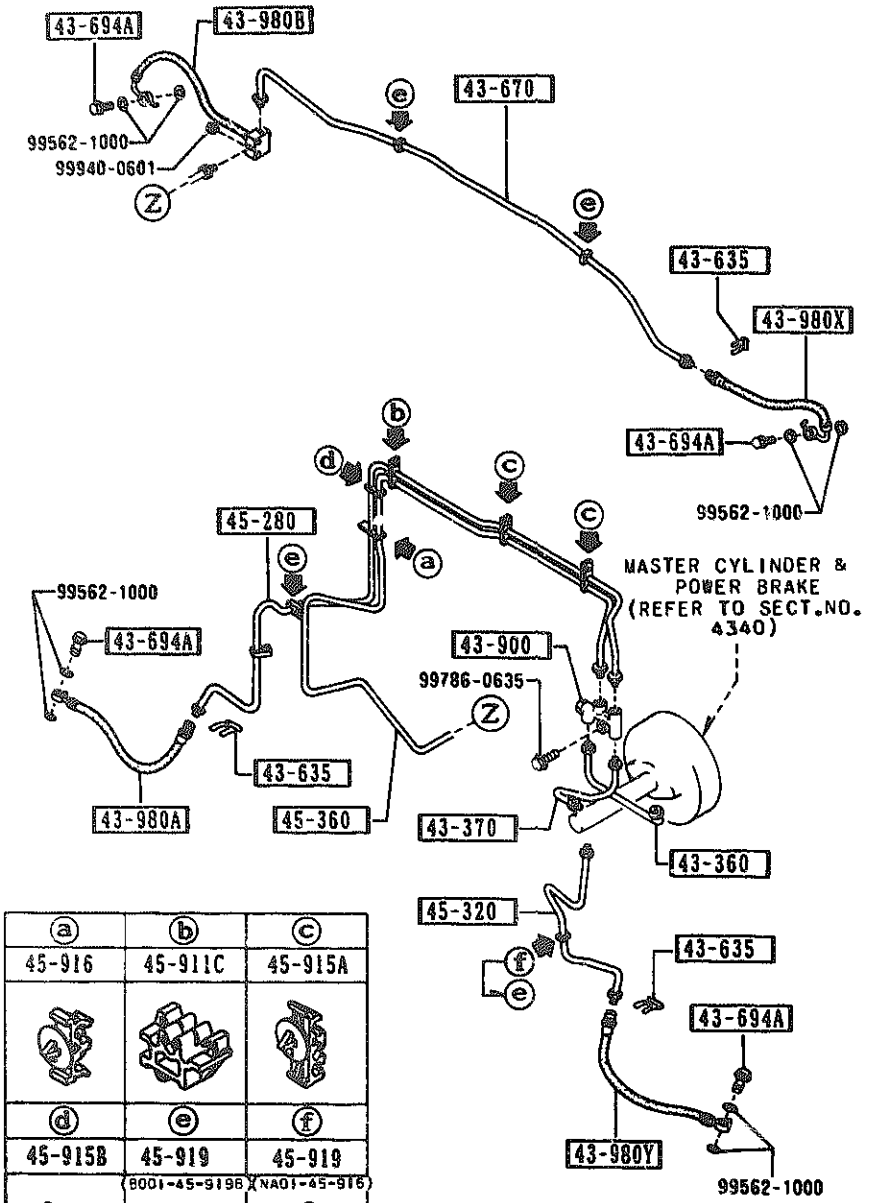

ⓐ	ⓑ	ⓒ
45-916	45-911C	45-915A
ⓓ	ⓔ	ⓕ
45-915B	45-919 (B001-45-919B)	45-919 (NA01-45-916)

4360 -1 BRAKE PIPINGS

PART NO.	Q'TY	MODEL/RESTRICTION	MODEL/RESTRICTION	MODEL/RESTRICTION	FROM-TO
43-360 NA01-43-360A	1	PIPE,BRAKE			
43-370 NA01-43-370	1	PIPE,BRAKE			
43-635 W023-43-635	3	CLIP,FLEXIBLE HOSE			
43-670 NA01-43-670A	1	PIPE,BRAKE-REAR			
43-694A B001-43-694A	4	BOLT,CONNECTOR			
43-900 NA01-43-900	1	VALVE,DUAL PROPORTIONING			
43-980A NA01-43-810A	1	HOSE(R),FLEXIBLE-FRT			
43-980B NA01-43-980	1	HOSE(R),FLEXIBLE-RR			
43-980X NA01-43-990	1	HOSE(L),FLEXIBLE-RR			
43-980Y NA01-43-820A	1	HOSE(L),FLEXIBLE-FRT			
45-280 NA01-45-280B	1	PIPE(R),BRAKE-FRONT			
45-320 NA01-45-320B	1	PIPE(L),BRAKE-FRONT			
45-360 NA01-45-360B	1	PIPE NO.2,BRAKE-REAR			
45-911C NA01-45-911	1	CLIP,PIPE			

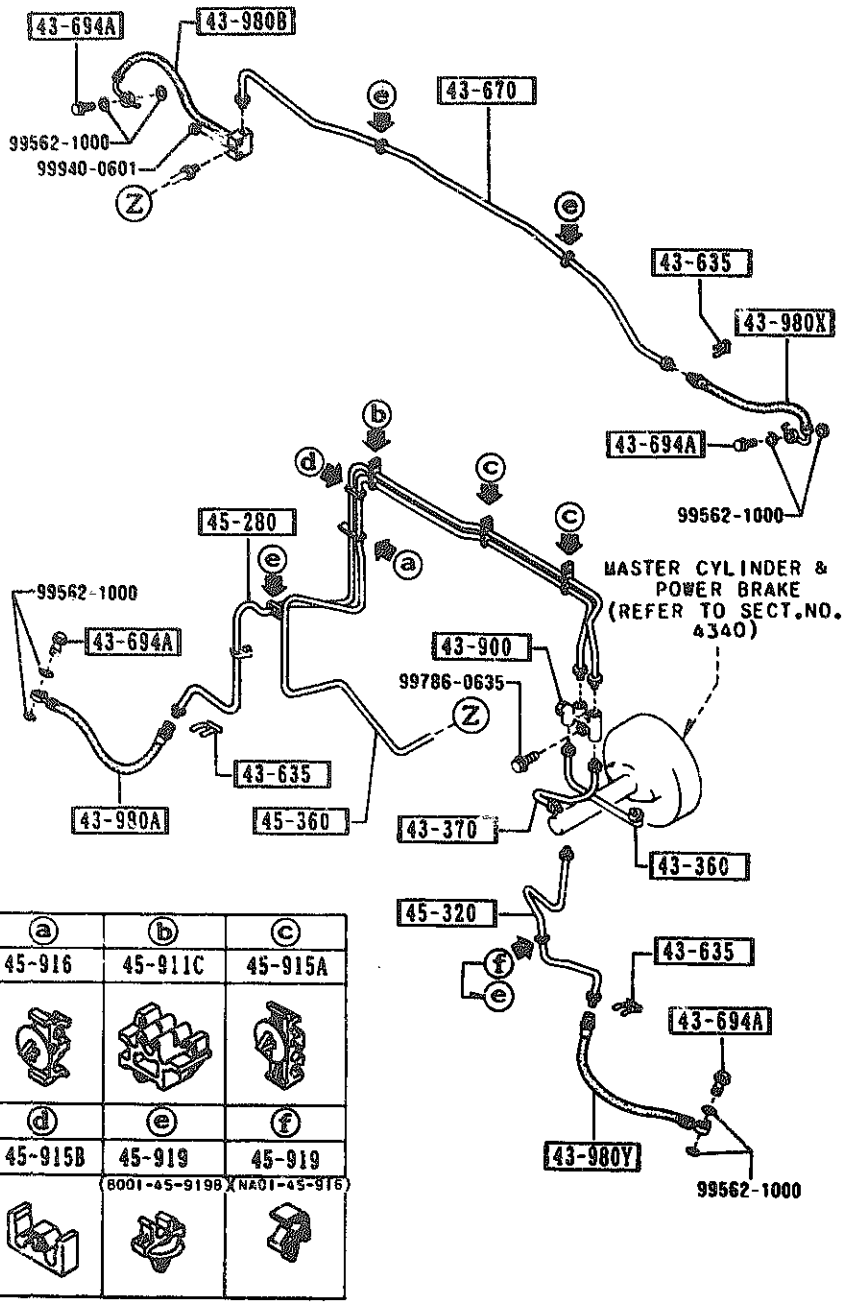

ⓐ	ⓑ	ⓒ
45-916	45-911C	45-915A
ⓓ	ⓔ	ⓕ
45-915B	45-919 (B001-45-9198)	45-919 (NA01-45-916)

PART NO.	QTY	MODEL/RESTRICTION	MODEL/RESTRICTION	MODEL/RESTRICTION	FROM-TO
45-915A		HOLDER,PIPE			
B001-45-915	2				
45-915B		HOLDER,PIPE			
NA01-45-915A	1				
45-916		HOLDER,PIPE			
B001-45-916	1				
45-919		CLIP,PIPE			
NA01-45-916	1				-9801
B001-45-919B	3				-9801
B001-45-919B	4				9801-

9801 NA35##-116316

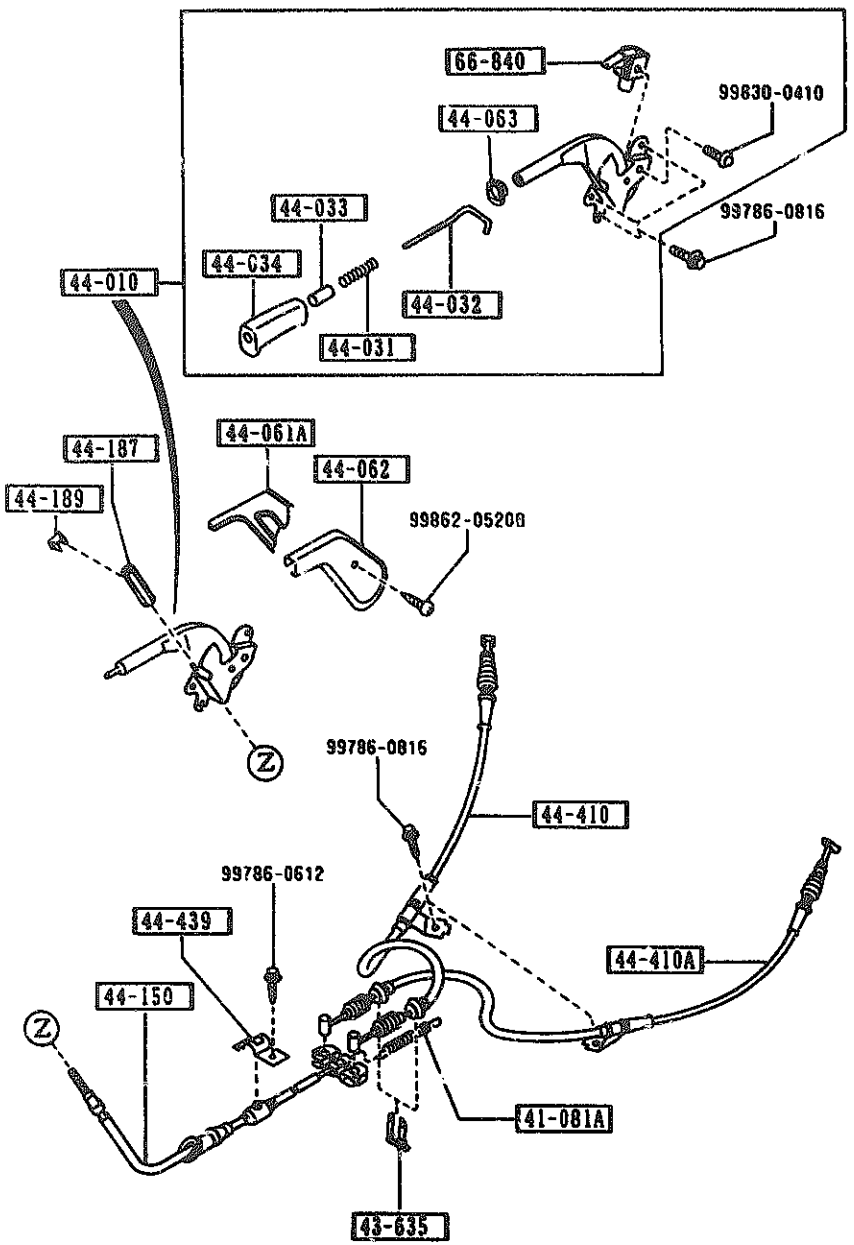

PART NO.	QTY	MODEL/RESTRICTION	MODEL/RESTRICTION	MODEL/RESTRICTION	FROM-TO
41-081A 0750-41-308	1	SPRING,RETURN			
43-635 W023-43-635	2	CLIP,FLEXIBLE HOSE			
44-010 NA01-44-010	1	LEVER,PARKING BRAKE			
44-031 G030-44-031	1	SPRING,PARKING REVER			
44-032 NA01-44-032	1	ROD,RELEASE			
44-033 FB01-44-033	1	BUTTON,RELEASE			
44-034 FB01-44-034	1	CAP,PARK BRAKE LEVER			
44-061A FB01-44-061B	1	COVER			
44-062 FB01-44-062A	1	COVER			
44-063 FC01-44-063	1	SPACER			
44-150 NA01-44-150B	1	CABLE,PARKING-FRT			
44-187 0866-44-187A	1	SCREW,ADJUST			
44-189 0866-44-189	1	CLIP			
44-410 NA01-44-410B	1	CABLE(R),R.-PARK.			

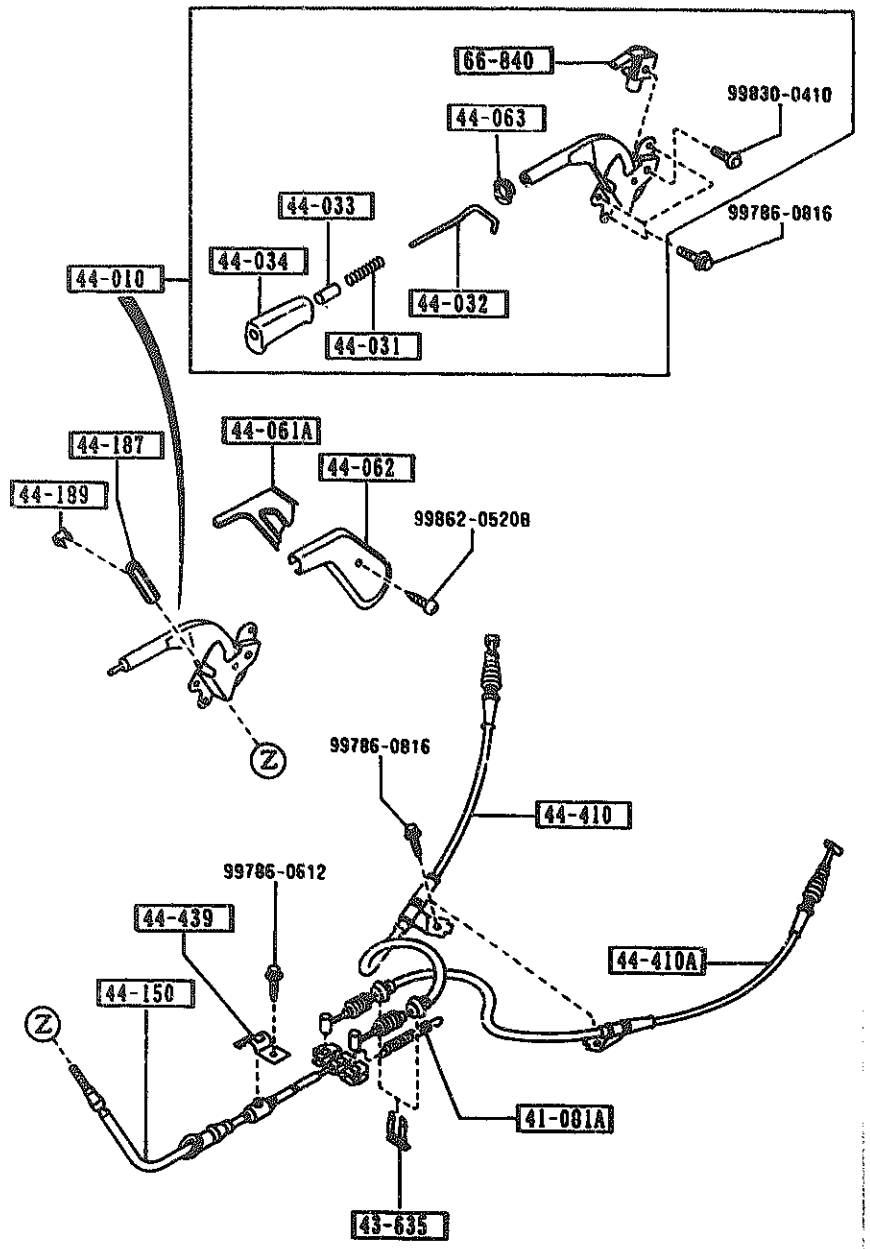

PART NO.	QTY	MODEL/RESTRICTION	MODEL/RESTRICTION	MODEL/RESTRICTION	FROM-TO
44-410A		CABLE(L),R.-PARK.			
NA01-44-420B	1				
44-439		CLIP,CABLE			
1011-44-439	1				
66-840		SWITCH,PARKING LAMP			
GJ21-66-450A	1				

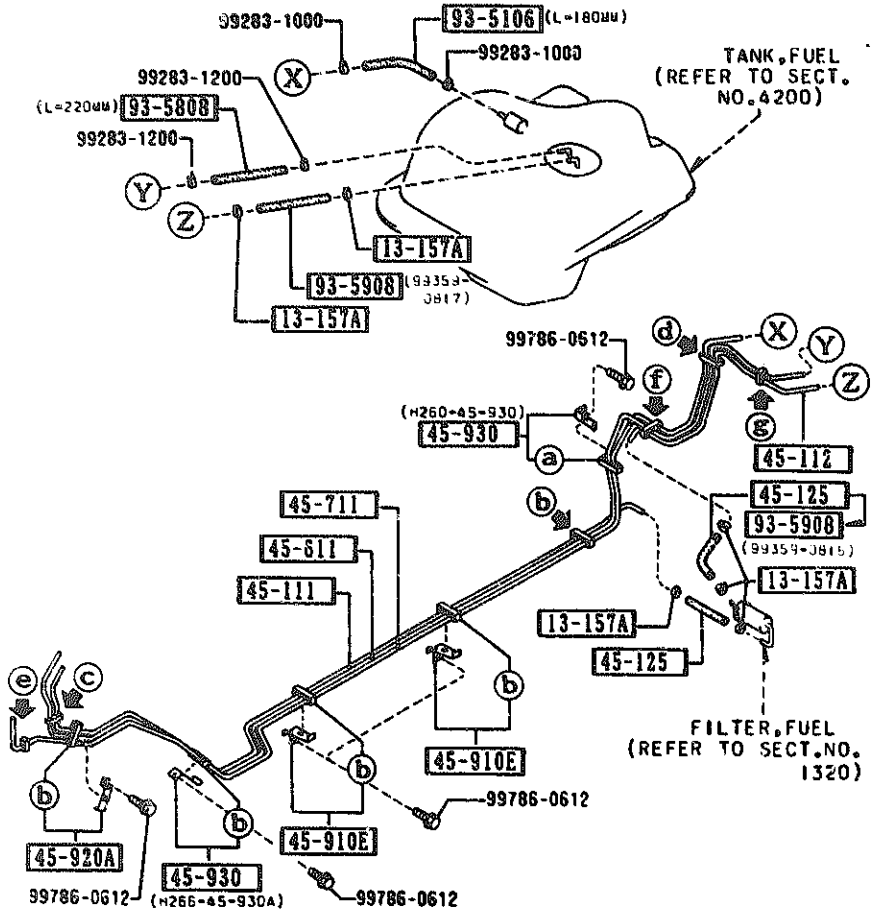

ⓐ	ⓑ	ⓒ	ⓓ	ⓔ	ⓕ	ⓖ
45-912D	45-912D	45-913	45-913A	45-914	45-915	45-921
(H260-45-912)	(H266-45-912)					

93-5106 93-5808		99351-06999	L=180MM
		99358-08999	L=220MM

PART NO.	QTY	MODEL/RESTRICTION	MODEL/RESTRICTION	MODEL/RESTRICTION	FROM-TO
13-157A		CLIP			
8574-13-157	6				
45-111		P PE,FUEL-MAIN			
NA01-45-111	1				
45-112		PIPE,FUEL-MAIN			
NA01-45-112A	1				
45-125		HOSE,FUEL			
99359-0815	2				-9B01
99359-0815	1				9B01-
45-611		PIPE,FUEL-RETURN			
NA01-45-611	1				
45-711		PIPE,EVAPORATION			
NA01-45-711A	1				
45-910E		HOLDER,PIPE			
H266-45-910A	2				
45-912D		HOLDER'A'			
H260-45-912	1				
H266-45-912	5				
45-913		HOLDER,PIPE			
NA01-45-912	1				
45-913A		CLIP,PIPE			
NA01-45-913	1				
45-914		HOLDER,PIPE			
FB01-45-914	1	NIFUKO			
45-915		CLIP,PIPE			
NA01-45-914	1				
45-920A		HOLDER'B',PIPE			
H266-45-920A	1				

9B01 NA35##-126490

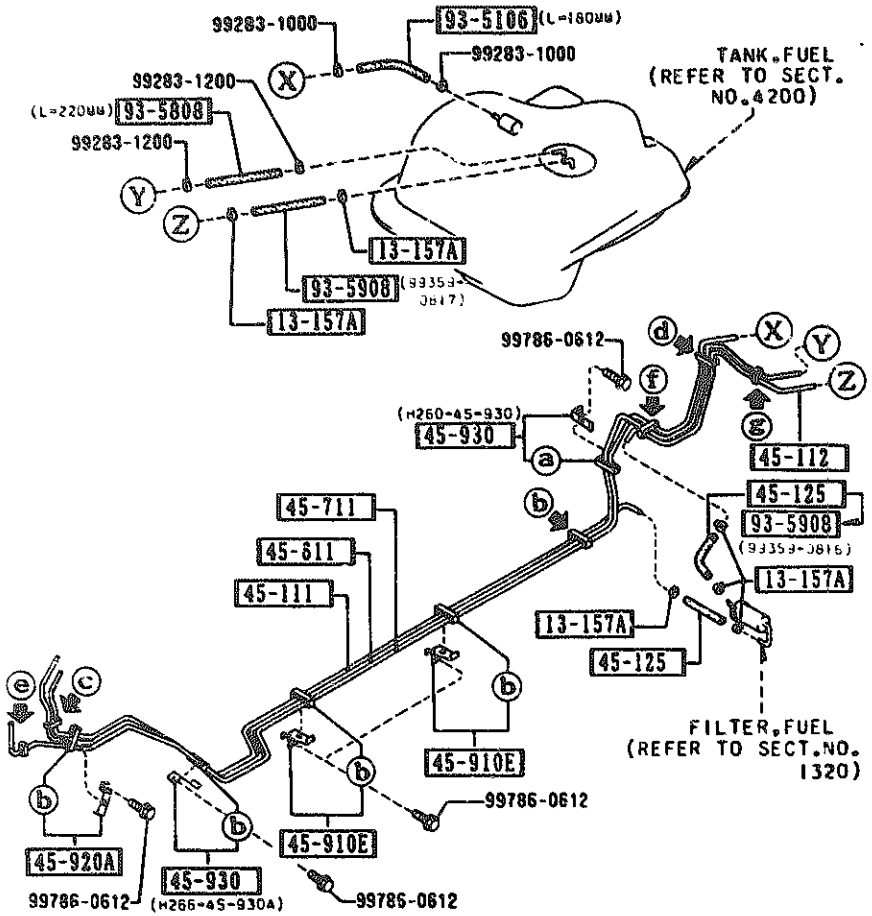

ⓐ	ⓑ	ⓒ	ⓓ	ⓔ	ⓕ	ⓖ
45-912D	45-912D	45-913	45-913A	45-914	45-915	45-921
(M260-45-912)	(M266-45-912)					

93-5106 93-5808	99351-06999	L=180MM
	99358-08999	L=220MM

PART NO.	QTY	MODEL/RESTRICTION	MODEL/RESTRICTION	MODEL/RESTRICTION	FROM-TO
45-921		CLIP,PIPE			
8210-45-917	1				
45-930		HOLDER'C',PIPE			
M260-45-930	1				
M266-45-930A	1				
93-5106		HOSE			
99351-06999	1				
93-5808		HOSE			
99358-08999	1				
93-5908		HOSE			
99359-0817	1				
99359-0816	1				9801-

9801 NA35##-126490