Parts Catalog

Mazda MX-5 MIATA
U.S.A.
('90)

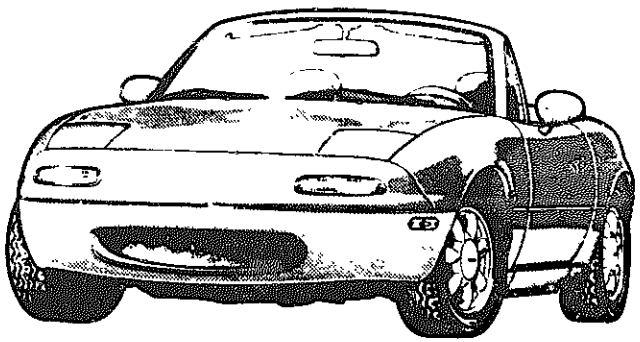

NA38**-100001~200000

Feb.'92 (FINAL)

Catalog No. AU-NA01-07

mazda

©1992 Mazda Motor Corporation

LAYOUT OF CONTENTS

• The following is a typical example of the layout of contents in Mazda microfiche parts cata

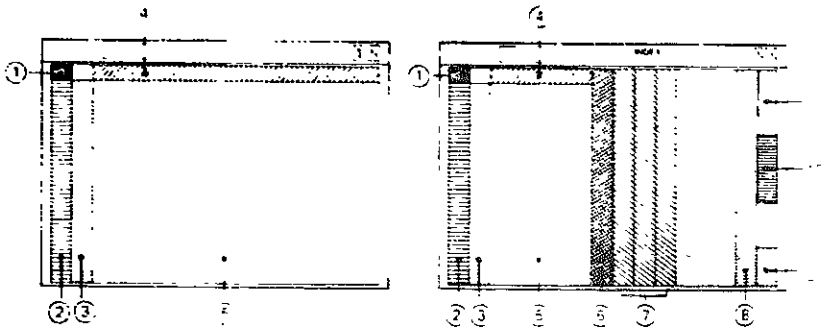

① · Layout of contents
② · Pictorial Index
③ · Master Section No. Index
④ · Section No. Index for the Column
⑤ · Illustration & Text
⑥ Part No. Index
⑦ · Alphabetical Index
⑧ · Model Identification
⑨ · Vehicle Identification System

PICTORIAL INDEX

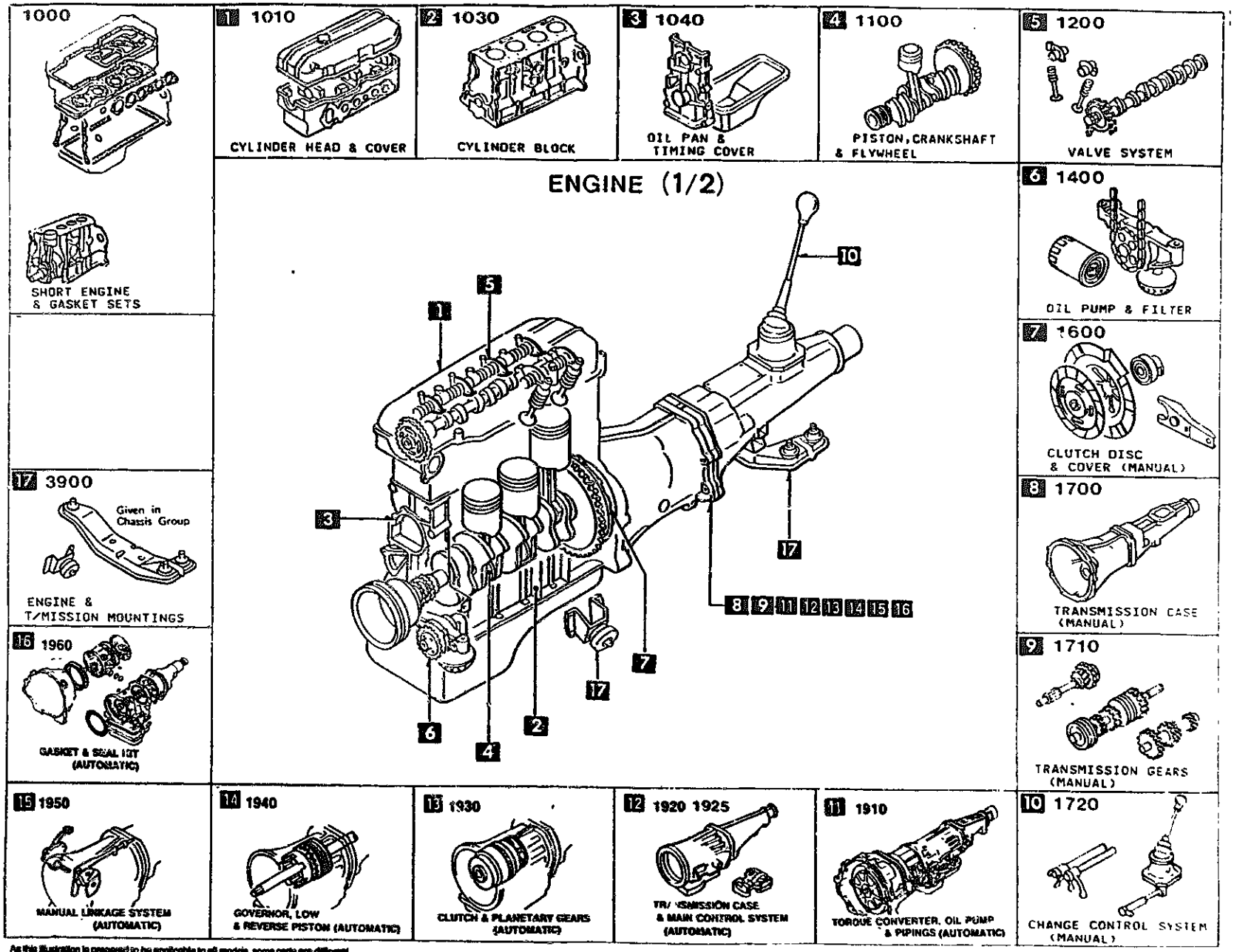

As this illustration is prepared to be applicable to all models, some parts are different in specifications from the parts listed in this parts Catalog.

PICTORIAL INDEX

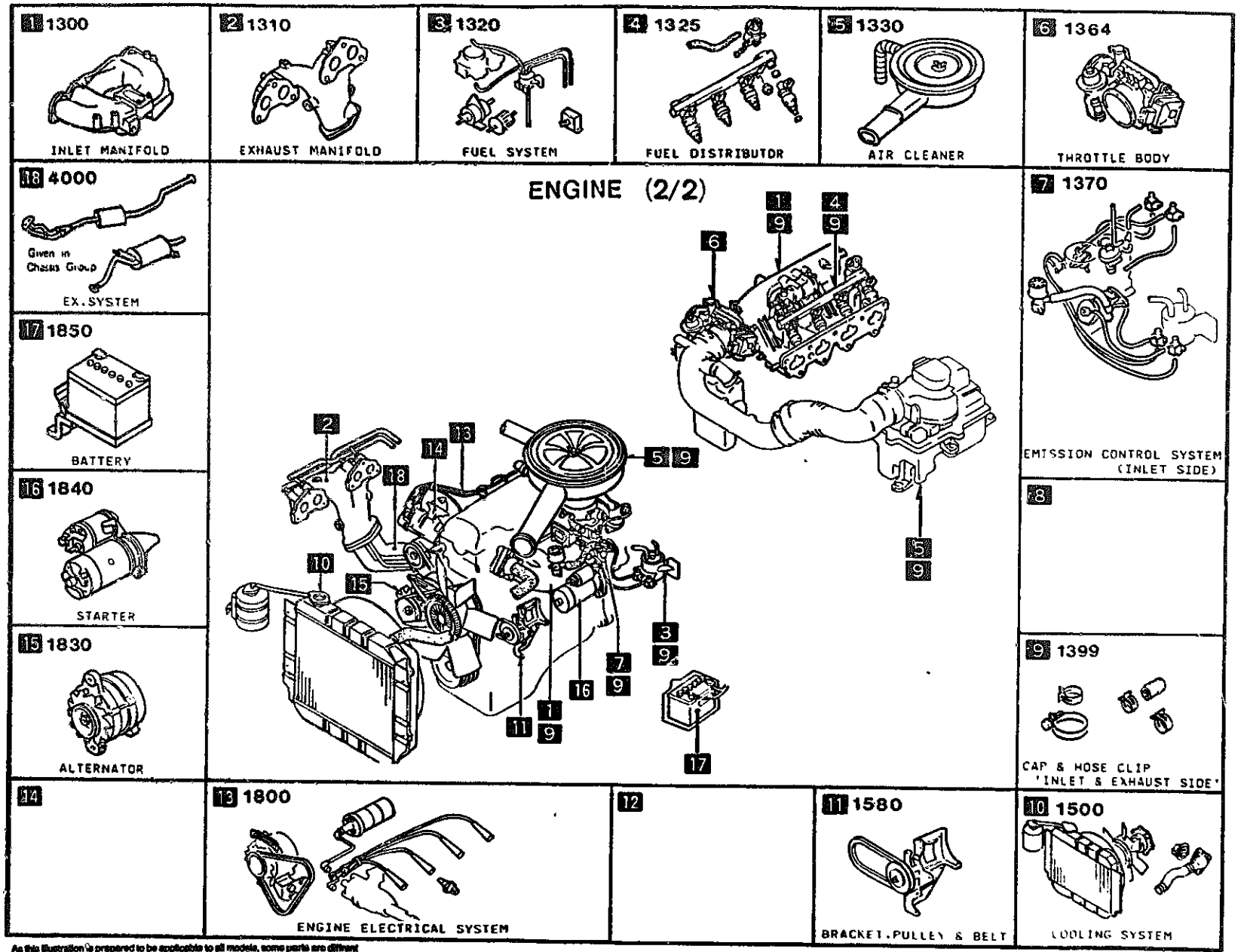

As this illustration is prepared to be applicable to all models, some parts are different in specifications from the parts listed in this parts Catalog.

PICTORIAL INDEX

CHASSIS (1/2)

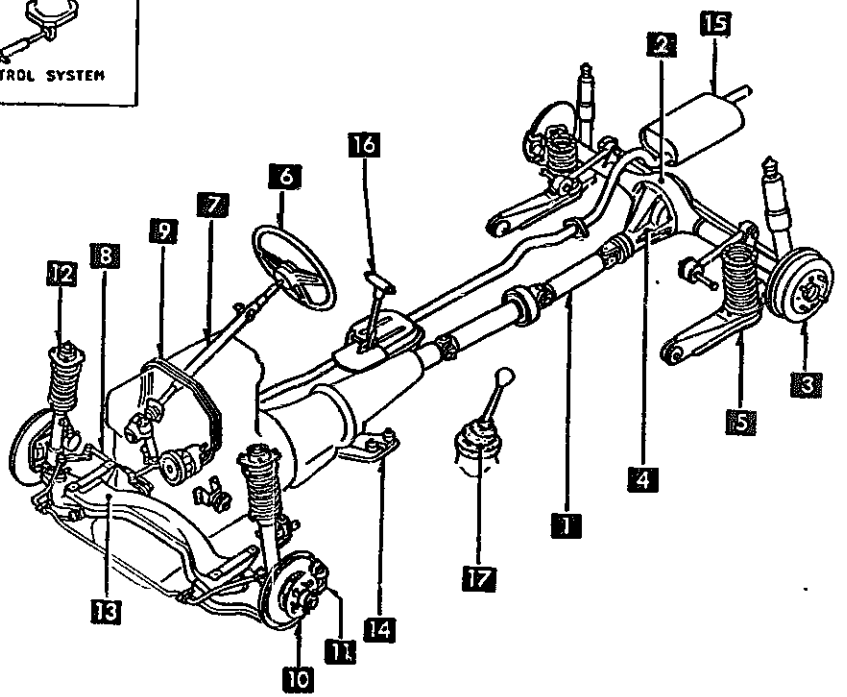

1 2505
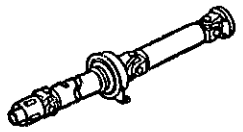
REAR PROPELLER SHAFT

2 2550
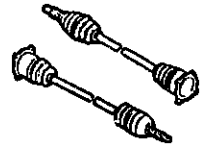
REAR DRIVE SHAFTS

2600
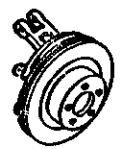
REAR AXLE

3 2610

REAR BRAKE MECHANISMS

4 2710
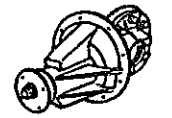
REAR DIFFERENTIALS

5 2800 2810
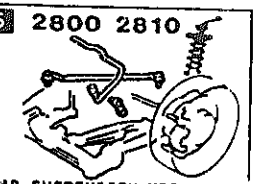
REAR SUSPENSION MECHANISMS
REAR STABILIZER

16 4600
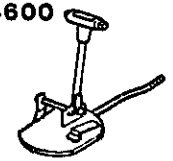
CHANGE CONTROL SYSTEM (AUTOMATIC)

17 1720
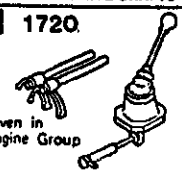

CHANGE CONTROL SYSTEM (MANUAL)

2801
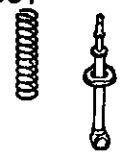
REAR SPRING & DAMPER

15 4000
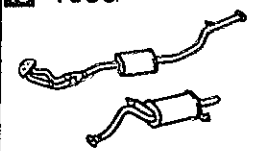
EXHAUST SYSTEM

2830

REAR LOWER ARMS & SUB FRAME

14 3900
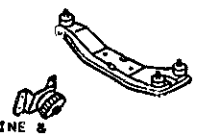
ENGINE & T/MISSION MOUNTINGS

6 3200

STEERING WHEEL

13 3410
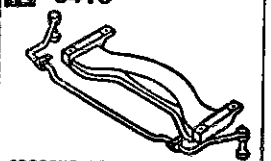
CROSSMEMBER & STABILIZER

7 3210

STEERING COLUMN & SHAFTS

12 3401

FRONT SPRING & DAMPER

3400
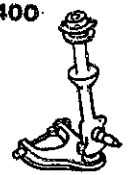
FRONT SUSPENSION MECHANISMS

11 3310

FRONT BRAKE MECHANISMS

10 3300
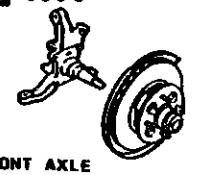
FRONT AXLE

9 3240
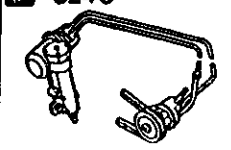
POWER STEERING SYSTEM

8 3220

STEERING GEAR

As this illustration is prepared to be applicable to all models, some parts are different in specifications from the parts listed in this parts Catalog

PICTORIAL INDEX

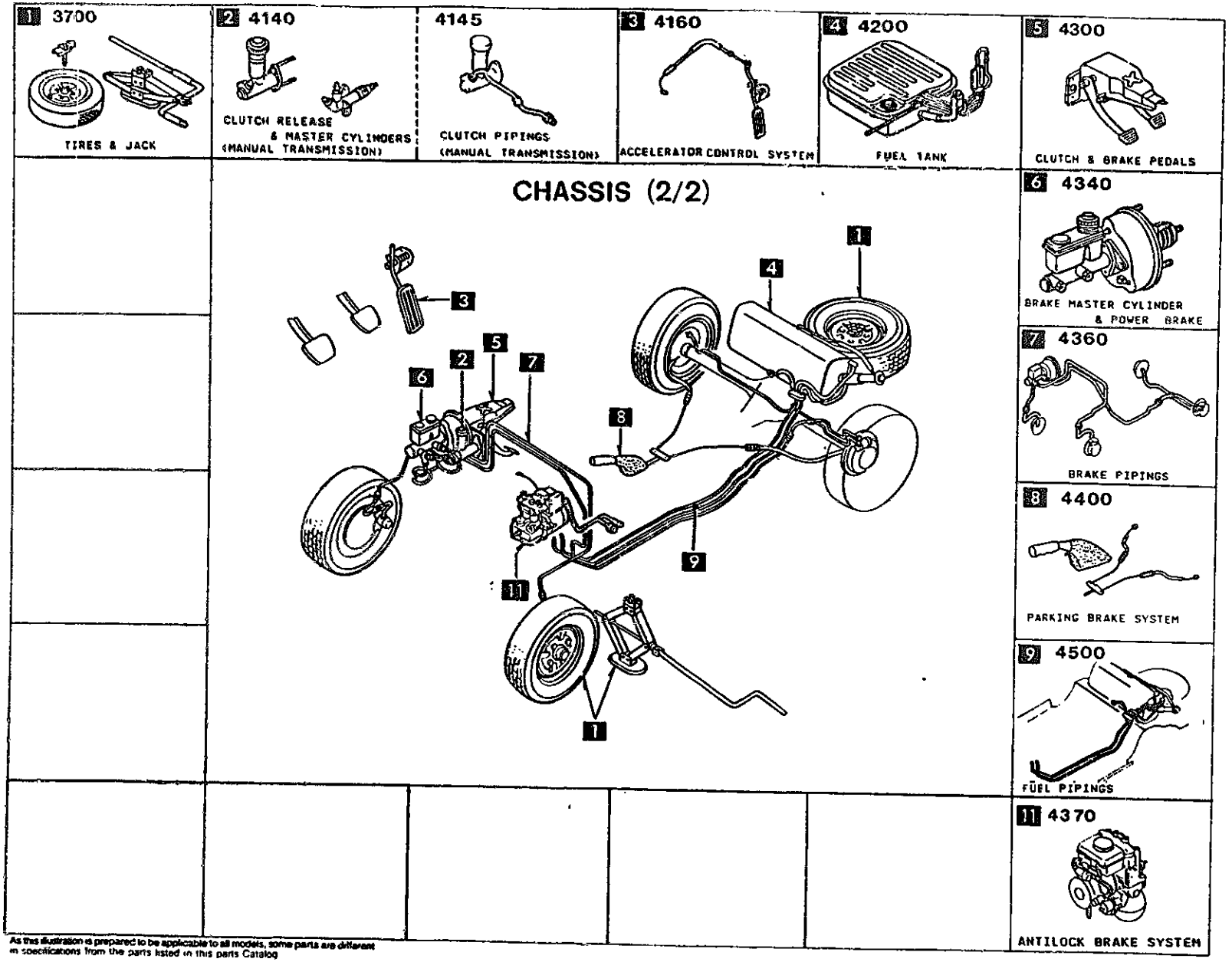

As this illustration is prepared to be applicable to all models, some parts are different in specifications from the parts listed in this parts Catalog

PICTORIAL INDEX

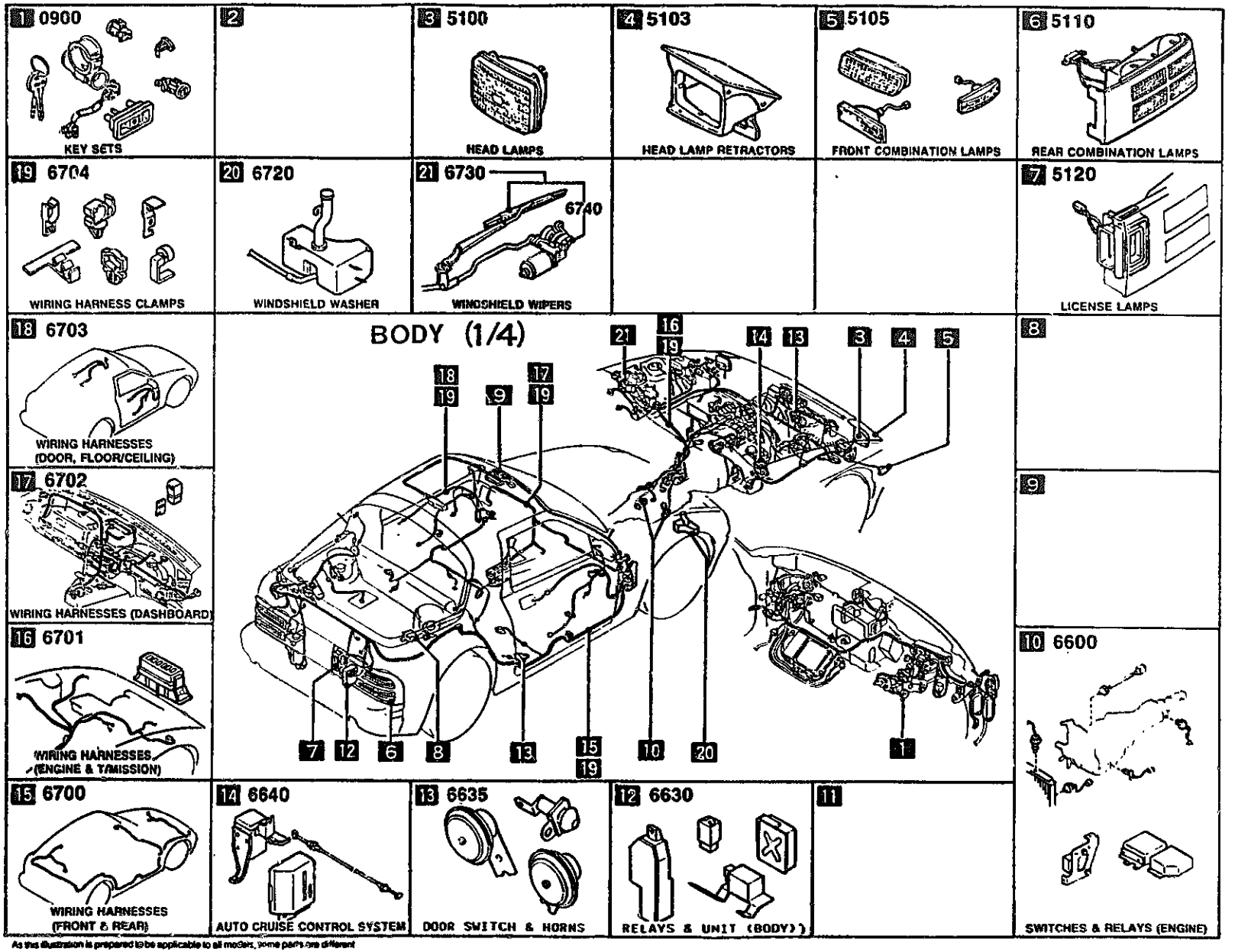

As this illustration is prepared to be applicable to all models, some parts are different in specifications from the parts listed in this parts Catalog

PICTORIAL INDEX

1 5000 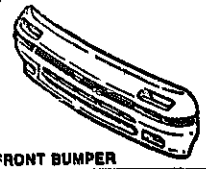 FRONT BUMPER	2	3 5010 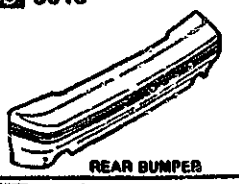 REAR BUMPER	4 5030 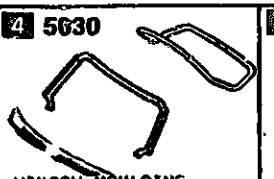 WINDOW MOULDING & COWL GRILLES	5	6
20 5840  FRONT DOOR TRIMS & RELATED PARTS	21	22 6300  WINDOW GLASSES	23 6330  SUNROOF	24 7900 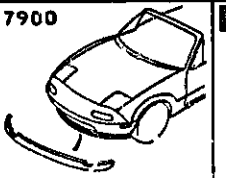 ACCESSORIES	7
19 5830  FRONT DOOR MECHANISMS	BODY (2/4) 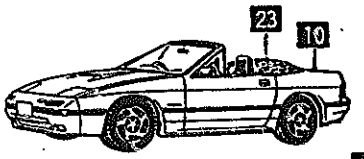 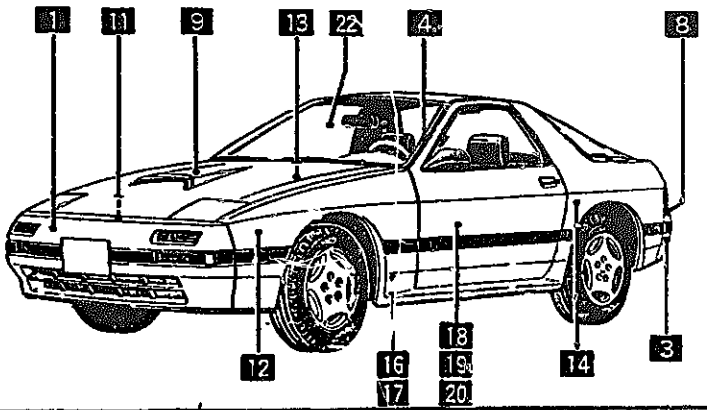				8 5180 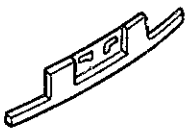 REAR FINISHER
18 5800 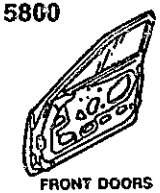 FRONT DOORS					9 5230 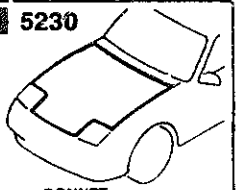 BONNET
17 5390 5380 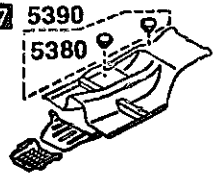 FLOOR ATTACHMENTS					10 5260  TRUNK LID
16 5370 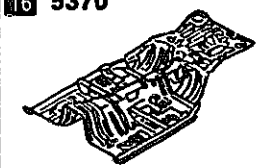 BODY PANELS (FLOOR)	15	14 5340 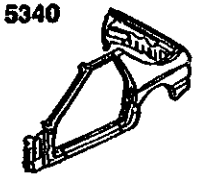 BODY PANELS (SIDE)	13 5330 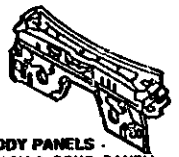 BODY PANELS (DASH & COWL PANEL)	12 5320 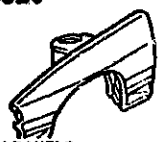 BODY PANELS (FENDER & WHEEL APRON)	11 5310 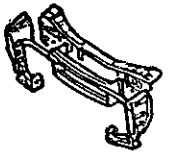 BODY PANELS (FRONT)

As this illustration is prepared to be applicable to all models, some parts are different in specifications from the parts listed in this parts Catalog

PICTORIAL INDEX

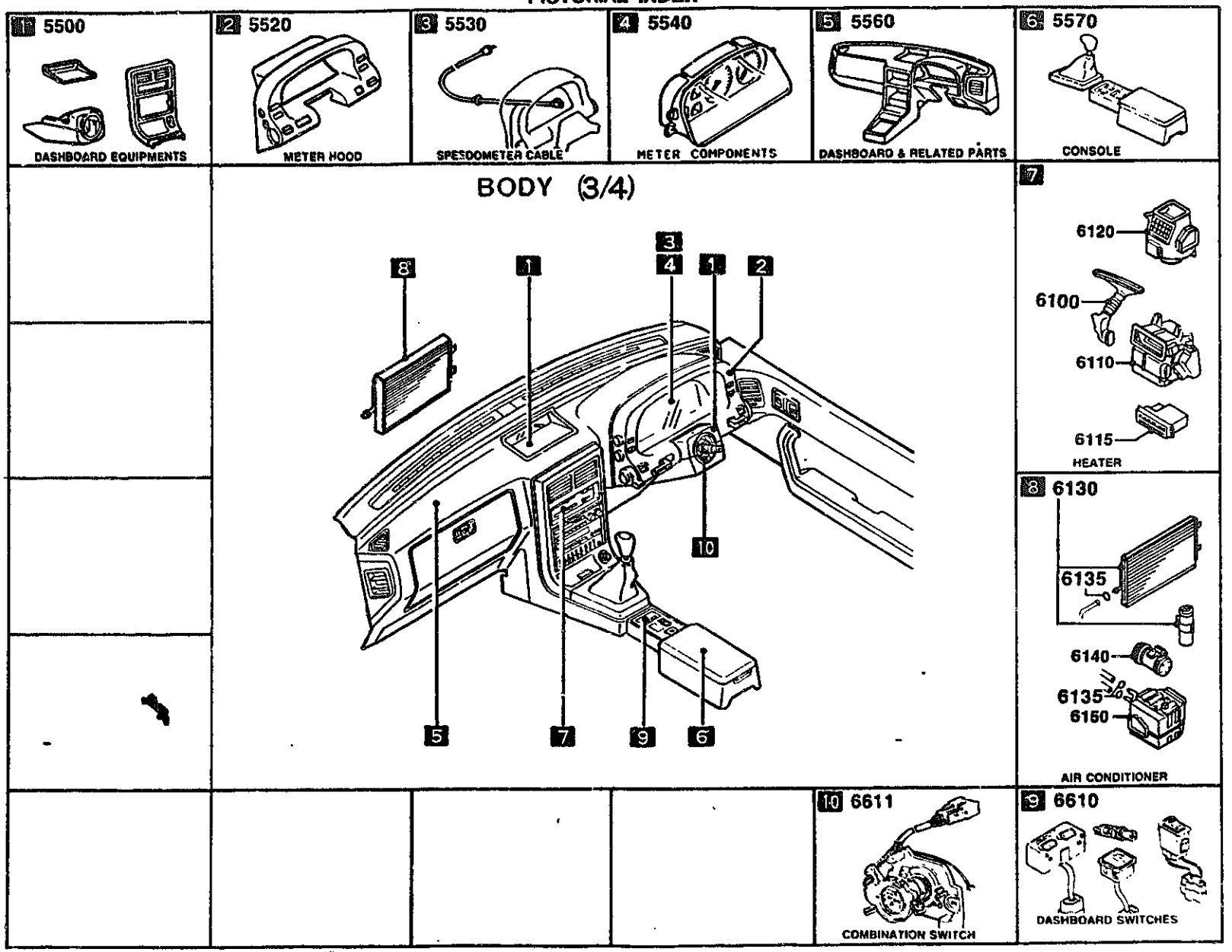

As this illustration is prepared to be applicable to all models some parts are different in specifications from the parts listed in this parts Catalog

PICTORIAL INDEX

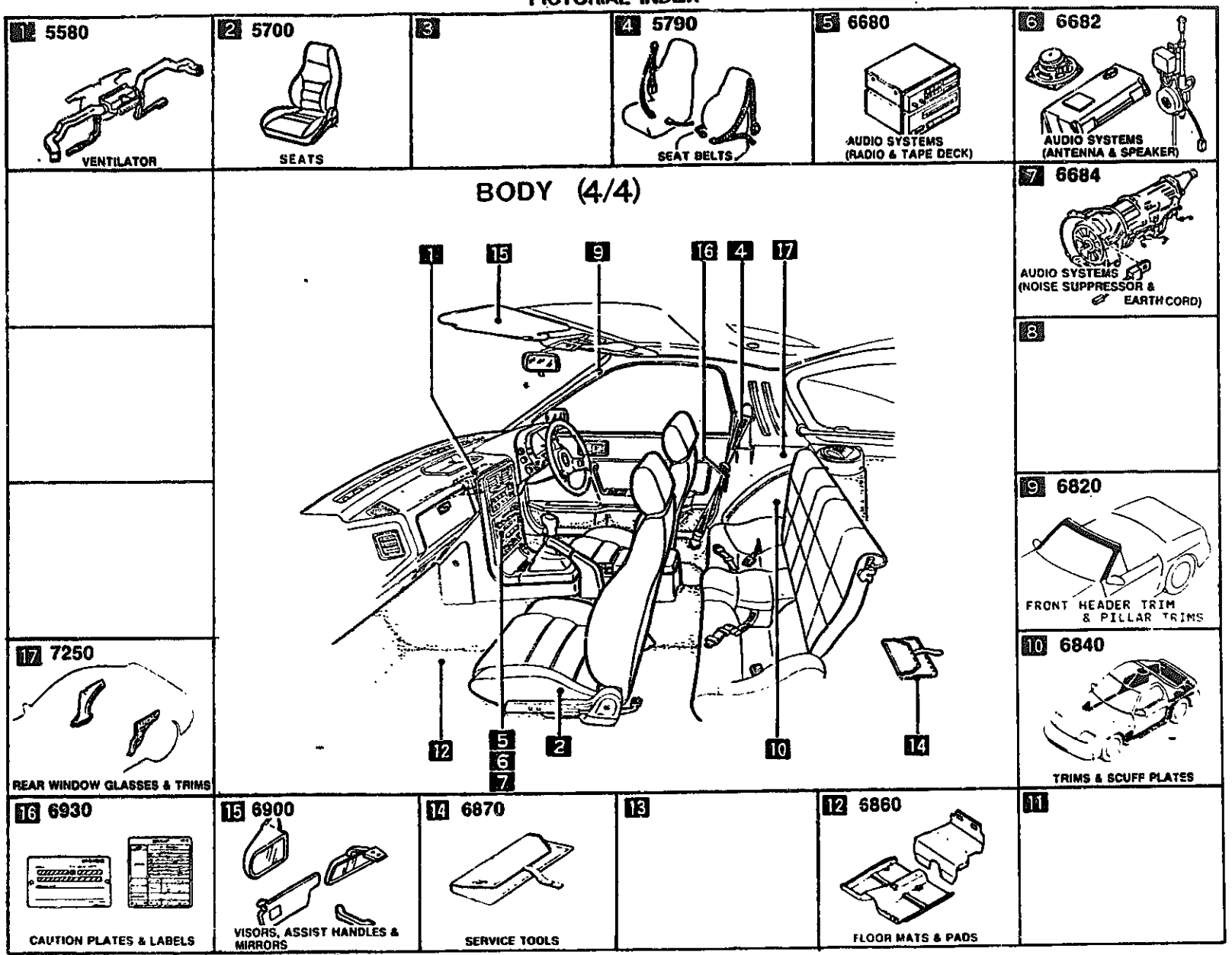

As this illustration is prepared to be applicable to all models, some parts are different in specifications from the parts listed in this parts Catalog

SECTION NAME INDEX (ENGINE)

LO.NO	SEC.NO	SECTION NAME	LO.NO	SEC.NO	SECTION NAME	LO.NO	SEC.NO	SECTION NAME
1-C03	1000	SHORT ENGINE & GASKET SETS						
1-D03	1010	CYLINDER HEAD & COVER						
1-G03	1030	CYLINDER BLOCK						
1-I03	1040	OIL PAN & TIMING COVER						
1-K03	1100	PISTON,CRANKSHAFT & FLYWHEEL						
1-N03	1200	VALVE SYSTEM						
1-D04	1300	INLET MANIFOLD						
1-E04	1310	EXHAUST MANIFOLD						
1-F04	1320	FUEL SYSTEM						
1-H04	1325	FUEL DISTRIBUTOR						
1-I04	1330	AIR CLEANER						
1-K04	1364	THROTTLE BODY						
1-L04	1370	EMISSION CONTROL SYSTEM (INLET SIDE)						
1-M04	1399	CAP & HOSE CLIP (INLET & EXHAUST SIDE)						
1-N04	1400	OIL PUMP & FILTER						
1-C05	1500	COOLING SYSTEM						
1-G05	1580	BRACKET,PULLEY & BELT						
1-C06	1600	CLUTCH DISC & COVER (MANUAL)						
1-D06	1700	TRANSMISSION CASE (MANUAL)						
1-E06	1710	TRANSMISSION GEARS(MANUAL)						
1-J06	1720	CHANGE CONTROL SYSTEM (MANUAL)						
1-M06	1800	ENGINE ELECTRICAL SYSTEM						
1-C07	1830	ALTERNATOR						
1-E07	1840	STARTER						
1-G07	1850	BATTERY						
1-H07	1910	TORQUE CONVERTER,OIL PUMP & PIPINGS (AUTOMATIC)						
1-K07	1920	TRANSMISSION CASE & MAIN CONTROL SYSTEM (AUTOMATIC)						
1-E08	1925	CONTROL VALVE (AUTOMATIC)						
1-I08	1930	CLUTCHES & PLANETARY GEARS (AUTOMATIC)						
1-D09	1940	GOVERNOR, LOW & REVERSE PISTON (AUTOMATIC)						
1-G09	1950	MANUAL LINKAGE SYSTEM (AUTOMATIC)						
1-I09	1960	GASKET & SEAL KIT (AUTOMATIC)						

CATLOG-NO= AUNA01-07

DATE. 1992-02

SECTION NAME INDEX (CHASSIS)

LO.NO	SEC.NO	SECTION NAME	LO.NO	SEC.NO	SECTION NAME	LO.NO	SEC.NO	SECTION NAME
1-C11	2505	REAR PROPELLER SHAFT	1-J16	4400	PARKING BRAKE SYSTEM			
1-D11	2550	REAR DRIVE SHAFT	1-L16	4500	FUEL PIPINGS			
1-E11	2600	REAR AXLE	2-C03	4600	CHANGE CONTROL SYSTEM (AT)			
1-F11	2610	REAR BRAKE MECHANISMS						
1-H11	2710	REAR DIFFERENTIALS (NORMAL DIFF.)						
1-L11	2710 A	REAR DIFFERENTIALS (LIMITED SLIP DIFF.)						
1-D12	2800	REAR SUSPENSION MECHANISMS						
1-E12	2801	REAR SPRING & DAMPER						
1-F12	2810	REAR STABILIZER						
1-G12	2830	REAR LOWER ARMS & SUB FRAME						
1-I12	3200	STEERING WHEEL						
1-L12	3210	STEERING COLUMN & SHAFTS						
1-M12	3220	STEERING GEAR (W/O POWER STEERING)						
1-C13	3220 A	STEERING GEAR (W/ POWER STEERING)						
1-F13	3240	POWER STEERING SYSTEM						
1-H13	3300	FRONT AXLE						
1-I13	3310	FRONT BRAKE MECHANISMS						
1-K13	3400	FRONT SUSPENSION MECHANISMS						
1-M13	3401	FRONT SPRING & DAMPER						
1-N13	3410	CROSSMEMBER & STABILIZER						
1-C14	3700	TIRES & JACK						
1-C15	3900	ENGINE & T/MISSION MOUNTINGS						
1-D15	4000	EXHAUST SYSTEM						
1-F15	4140	CLUTCH RELEASE & MASTER CYLINDERS (MANUAL TRANSMISSION)						
1-G15	4145	CLUTCH PIPINGS (MANUAL TRANSMISSION)						
1-H15	4160	ACCELERATOR CONTROL SYSTEM						
1-I15	4200	FUEL TANK						
1-M15	4300	CLUTCH & BRAKE PEDALS (MANUAL TRANSMISSION)						
1-D16	4300A	BRAKE PEDALS (AUTOMATIC TRANSMISSION)						
1-F16	4340	BRAKE MASTER CYLINDER & POWER BRAKE						
1-H16	4360	BRAKE PIPINGS						

SECTION NAME INDEX (BODY)

LO.NO	SEC.NO	SECTION NAME
2-C05	0900	KEY SETS
2-E05	5000	FRONT BUMPER
2-H05	5010	REAR BUMPER
2-J05	5030	WINDOW MOULDING & COWL GRILLES
2-L05	5100	HEAD LAMPS
2-M05	5103	HEAD LAMP RETRACTORS
2-D06	5105	FRONT COMBINATION LAMPS
2-F06	5110	REAR COMBINATION LAMPS
2-I06	5120	LICENSE LAMPS
2-J06	5180	REAR FINISHER
2-L06	5230	BONNET
2-N06	5260	TRUNK LID
2-D07	5310	BODY PANELS (FRONT)
2-E07	5320	BODY PANELS (FENDER & WHEEL APRON)
2-H07	5330	BODY PANELS (DASH & COWL PANEL)
2-I07	5340	BODY PANELS (SIDE)
2-C08	5370	BODY PANELS (FLOOR)
2-F08	5380	FLOOR ATTACHMENTS (HOLE COVERS)
2-G08	5390	FLOOR ATTACHMENTS
2-C09	5500	DASHBOARD EQUIPMENTS
2-E09	5520	METER HOOD
2-F09	5530	SPEEDOMETER CABLE
2-G09	5540	METER COMPONENTS
2-I09	5560	DASHBOARD & RELATED PARTS
2-L09	5570	CONSOLE
2-C10	5580	VENTILATOR
2-D10	5700	SEATS
2-K10	5790	SEAT BELTS
2-L10	5800	FRONT DOORS
2-C11	5830	FRONT DOOR MECHANISMS
2-F11	5840	FRONT DOOR TRIMS & RELATED PARTS
2-C12	6100	HEATER
2-D12	6110	HEATER UNIT COMPONENTS
2-E12	6115	HEATER CONTROLS COMPONENTS
2-F12	6120	HEATER BLOWER COMPONENTS
2-G12	6130	AIR CONDITIONER
2-K12	6135	O RING SET,PIPING
2-L12	6140	COMPRESSOR COMPONENTS (AIR CONDITIONER)
2-N12	6150	COOLING UNIT (AIR CONDITIONER)
2-C13	6300	WINDOW GLASSES
2-D13	6330	SUNROOF
2-M13	6600	SWITCHES & RELAYS (ENGINE)
2-D14	6610	DASHBOARD SWITCHES
2-E14	6611	COMBINATION SWITCH
2-F14	6630	RELAYS & UNIT (BODY)
2-G14	6635	DOOR SWITCH & HORNS
2-H14	6640	AUTO CRUISE CONTROL SYSTEM
2-I14	6680	AUDIO SYSTEMS (RADIO & TAPE DECK)
2-K14	6682	AUDIO SYSTEMS (ANTENNA & SPEAKER)
2-L14	6700	WIRING HARNESSES(FRONT & REAR)
2-N14	6701	WIRING HARNESSES(ENGINE & T/MISSION)
2-D15	6702	WIRING HARNESSES(DASHBOARD)
2-E15	6703	WIRING HARNESSES(DOOR,FLOOR/CEILING)
2-F15	6704	WIRING HARNESS CLAMPS
2-I15	6720	WINDSHIELD WASHER
2-K15	6730	WINDSHIELD WIPERS
2-M15	6740	WIPER MOTOR COMPONENTS(FRONT)
2-N15	6820	FRONT HEADER TRIM & PILLAR TRIMS
2-C16	6840	TRIMS & SCUFF PLATES
2-E16	6860	FLOOR MATS & PADS
2-G16	6870	SERVICE TOOLS
2-H16	6900	VISORS,ASSIST HANDLES & MIRRORS
2-J16	6930	CAUTION PLATES & LABELS
2-L16	7250	QUARTER WINDOW & TRIMS
3-C03	7900	ACCESSORIES

CATLOG-NO= AUNA01-07

DATE. 1992-02

SECTION NAME INDEX (ENGINE)

LO.NO	SEC.NO	SECTION NAME
1-C03	1000	SHORT ENGINE & GASKET SETS
1-D03	1010	CYLINDER HEAD & COVER
1-G03	1030	CYLINDER BLOCK
1-I03	1040	OIL PAN & TIMING COVER
1-K03	1100	PISTON,CRANKSHAFT & FLYWHEEL
1-N03	1200	VALVE SYSTEM
1-D04	1300	INLET MANIFOLD
1-E04	1310	EXHAUST MANIFOLD
1-F04	1320	FUEL SYSTEM
1-H04	1325	FUEL DISTRIBUTOR
1-I04	1330	AIR CLEANER
1-K04	1364	THROTTLE BODY
1-L04	1370	EMISSION CONTROL SYSTEM (INLET SIDE)
1-M04	1399	CAP & HOSE CLIP (INLET & EXHAUST SIDE)
1-N04	1400	OIL PUMP & FILTER
1-C05	1500	COOLING SYSTEM
1-G05	1580	BRACKET,PULLEY & BELT
1-C06	1600	CLUTCH DISC & COVER (MANUAL)
1-D06	1700	TRANSMISSION CASE (MANUAL)
1-E06	1710	TRANSMISSION GEARS(MANUAL)
1-J06	1720	CHANGE CONTROL SYSTEM (MANUAL)
1-M06	1800	ENGINE ELECTRICAL SYSTEM
1-C07	1830	ALTERNATOR
1-E07	1840	STARTER
1-G07	1850	BATTERY
1-H07	1910	TORQUE CONVERTER,OIL PUMP & PIPINGS (AUTOMATIC)
1-K07	1920	TRANSMISSION CASE & MAIN CONTROL SYSTEM (AUTOMATIC)
1-E08	1925	CONTROL VALVE (AUTOMATIC)
1-I08	1930	CLUTCHES & PLANETARY GEARS (AUTOMATIC)
1-D09	1940	GOVERNOR, LOW & REVERSE PISTON (AUTOMATIC)
1-G09	1950	MANUAL LINKAGE SYSTEM (AUTOMATIC)
1-I09	1960	GASKET & SEAL KIT (AUTOMATIC)

LO.NO	SEC.NO	SECTION NAME

LO.NO	SEC.NO	SECTION NAME

10-271S

1-SEAL,VALVE.....(16)
2-GASKET,HEAD COVER.....(1)
3-GASKET,CYLINDER HEAD.....(1)
4-GASKET,IN.MANIFOLD.....(1)
5-GASKET,EX.MANIFOLD.....(1)
6-GASKET,EX.MANIFOLD.....(1)
7-GASKET,THERMOSTAT COVER.....(2)
8-GASKET,OIL PAN.....(1)
9-GASKET,OIL PAN.....(1)
10-GASKET,T.B.COVER LWR.....(1)
11-GASKET(L).....(1)
12-GASKET(INN),TIMING BELT(L).....(1)
13-GASKET(C),TIMING BELT(L).....(1)
14-GASKET,T.BELT COVER-C. .....(1)
15-RUBBER,SEAL-SEAL PLATE.....(1)
16-SEAL,OIL.....(1)
17-SEAL,OIL.....(2)
18-SEAL,OIL-CRANKSHAFT.....(1)
19-GASKET,OIL PUMP.....(1)
20-GASKET,WATER PUMP.....(1)
21-GASKET,W.PUMP INLET.....(1)
22-RING, O -WATER BY-PASS.....(1)

23-800

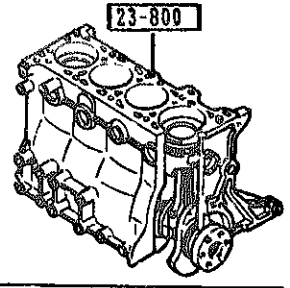

10-235S

1-SEAL,VALVE.....(16)
2-GASKET,HEAD COVER.....(1)
3-GASKET,CYLINDER HEAD....(1)
4-GASKET,IN.MANIFOLD.....(1)
5-GASKET,EX.MANIFOLD.....(1)
6-GASKET,EX.MANIFOLD.....(1)
7-GASKET,THERMOSTAT COVER....

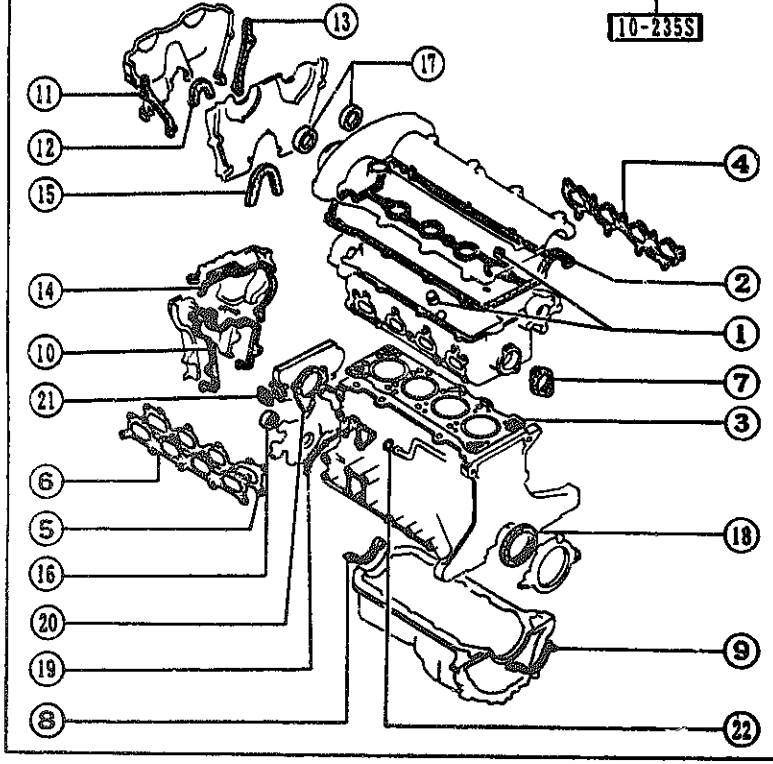

PART NO.	QTY	MODEL/RESTRICTION	MODEL/RESTRICTION	MODEL/RESTRICTION	FROM-TO
10-235S		GASKET SET,CYL. HEAD			
8AN1-10-235	1				
10-271S		GASKET SET,ENGINE			
8AN1-10-271	1				
23-800		ENGINE,SHORT			
B64E-02-200 A (B64E-02-200A)	1				-9A04
B64J-02-200 A (B64J-02-200A)	1				-0222
B64E-02-200A A (B64E-02-200B)	1				9A04-0222
B64E-02-200B	1	(MT)			0222-
B64J-02-200A	1	(AT)			0222-

9A04 NA35※※-123222
0222 NA35※※-140861

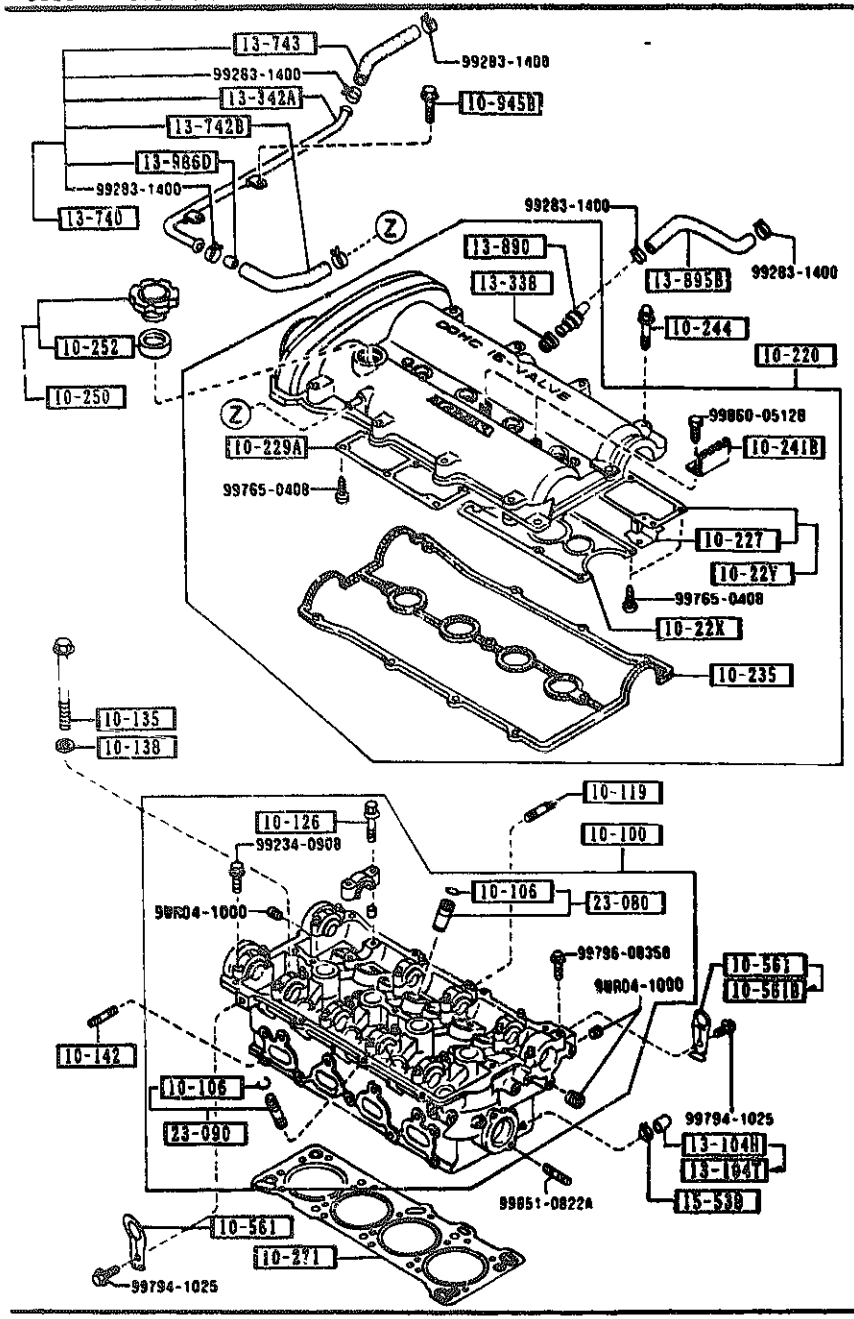

PART NO.	QTY	MODEL/RESTRICTION	MODEL/RESTRICTION	MODEL/RESTRICTION	FROM-TO
10-100		HEAD,CYLINDER			
B61P-10-100A AN(B61P-10-100B)	1				-9901
B61P-10-100B	1				9901-
10-106		CLIP,VALVE GUIDE			
B660-10-106	16				
10-119		STUD			
FE4J-13-146	5				
10-126		BOLT,CAMSHAFT CAP			
B660-10-126	20				
10-135		BOLT,CYLINDER HEAD			
B660-10-135A	10				
10-138		WASHER,PLAIN CYL. HEAD			
B630-10-138A	10				
10-142		STUD,EX. MANIFOLD			
B660-10-104A	9				
10-22X		PLATE,OIL BAFFLE-INSIDE			
B61P-10-22X	1				
10-22Y		PLATE,OIL BAFFLE-EX.			
B6S7-10-22Y	1				
10-220		COVER,CYLINDER HEAD			
B61P-10-210B A (B61P-10-210C)	1				-9904
B61P-10-210C	1				9904-
10-227		PLATE,BAFFLE			
B61P-10-227	1				
10-229A		PLATE,OIL BAFFLE			
B6S7-10-225	2				
10-235		GASKET,HEAD COVER			

9901 NA35**-119257
9904 NA35**-119498

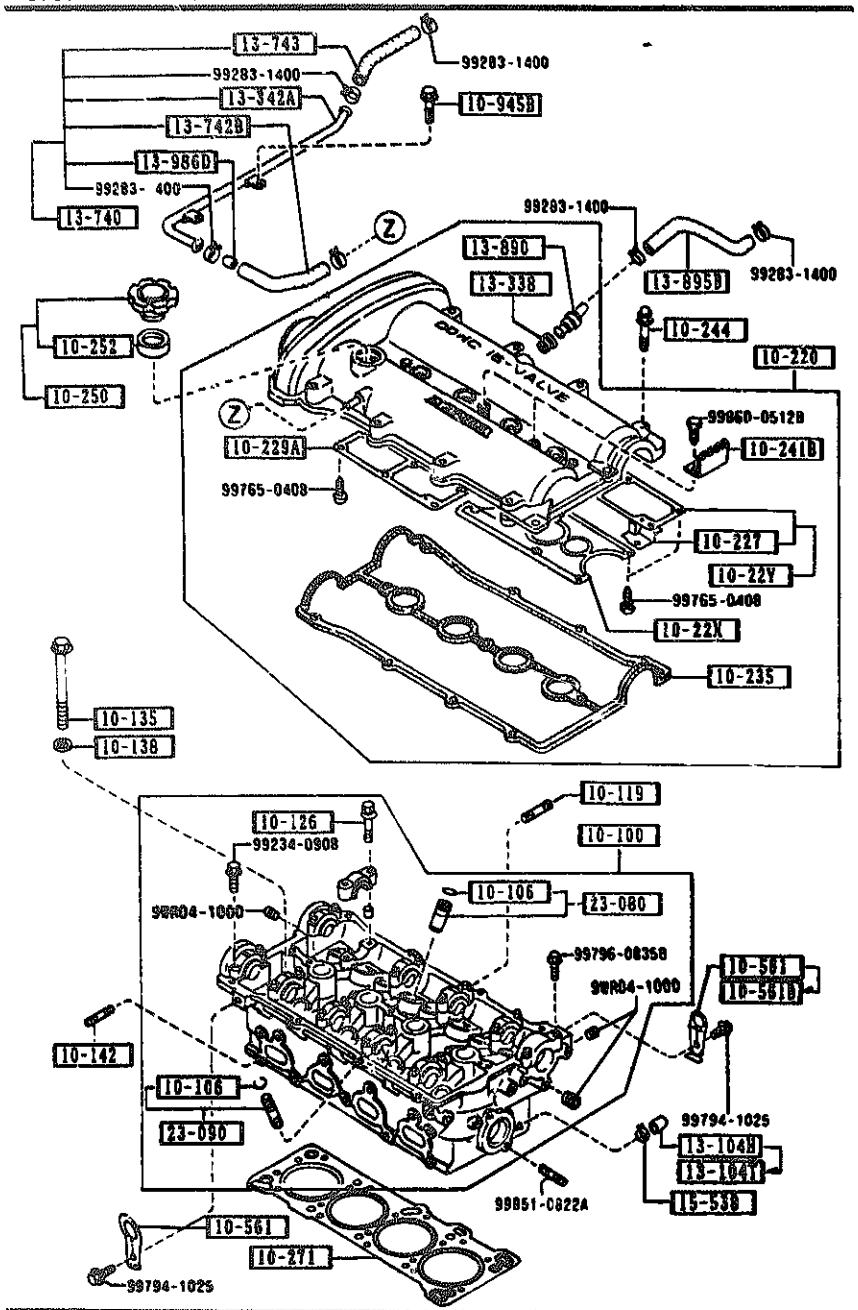

AUNA01

PART NO.	QTY	MODEL/RESTRICTION	MODEL/RESTRICTION	MODEL/RESTRICTION	FROM-TO
CONT'D					
B61P-10-235	1	NON ASBESTOS			
10-241B		PROTECTOR,HT.CORD-S.TANK			
B660-10-241	2				
10-244		BOLT,CYLINDER HEAD COVER			
B660-10-244	11				
10-250		CAP,OIL FILLER			
0453-10-250A	1				
10-252		GASKET			
0324-10-252	1				
10-271		GASKET,CYLINDER HEAD			
B6F4-10-271A	1	NON ASBESTOS			
10-561		HANGER,ENGINE			
B660-10-561	2				-9801
B660-10-561	1				9801-
10-561B		HANGER,ENGINE-REAR			
B61P-10-565	1				9801-
10-945B		BOLT			
B61P-13-366	2				
13-104H		CAP,BLIND			
F667-13-104	1				-9801
13-104T		CAP,SEALING			
FEA7-13-104	1				9801-
13-338		SEAL,RUBBER			
E301-13-338A	1				
13-342A		PIPE,VENTILATION			
B61P-13-74XA	1				

9801 NA35**-116316
9801 NA35**-126490

CAT. AUNA01-07

1992-02

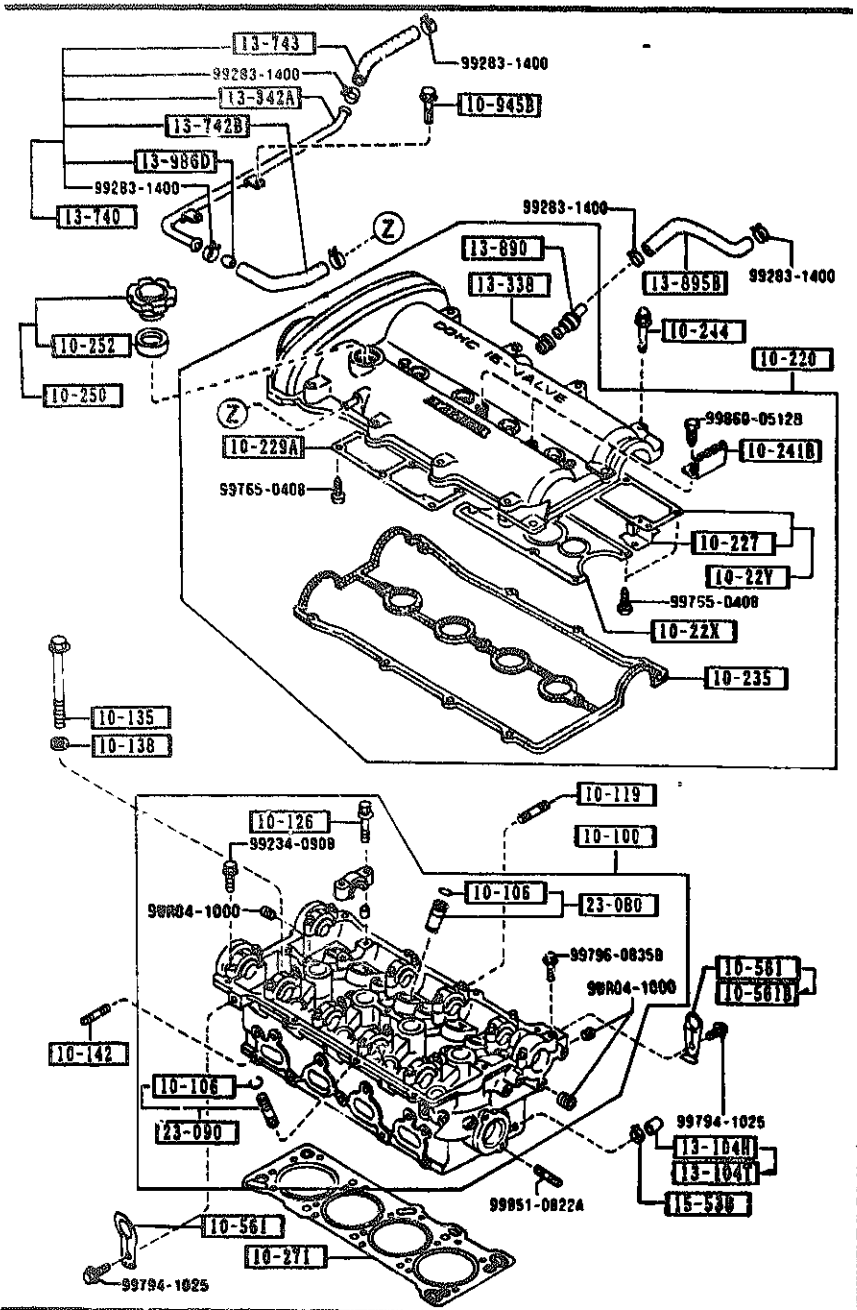

AUNA01

PART NO.	QTY	MODEL/RESTRICTION	MODEL/RESTRICTION	MODEL/RESTRICTION	FROM-TO
13-740 B61P-13-740A	1	HOSE,VENT.-PURGE CONT. V.			
13-742B B61P-13-742A	1	HOSE,VENTILATION			
13-743 G61P-13-743A	1	HOSE,VENTILATION			
13-890 BP05-13-890	1	VALVE,P.C.V.			
13-895B B61P-13-741	1	HOSE,P.C.V.			
13-986D B61P-13-986	1	ORIFICE			
15-538 JF02-15-538	1	CLAMP,WATER HOSE			
23-080 B6Z0-10-280	8	GUIDE,VALVE			
23-090 B6Z0-10-290	8	GUIDE,VALVE			

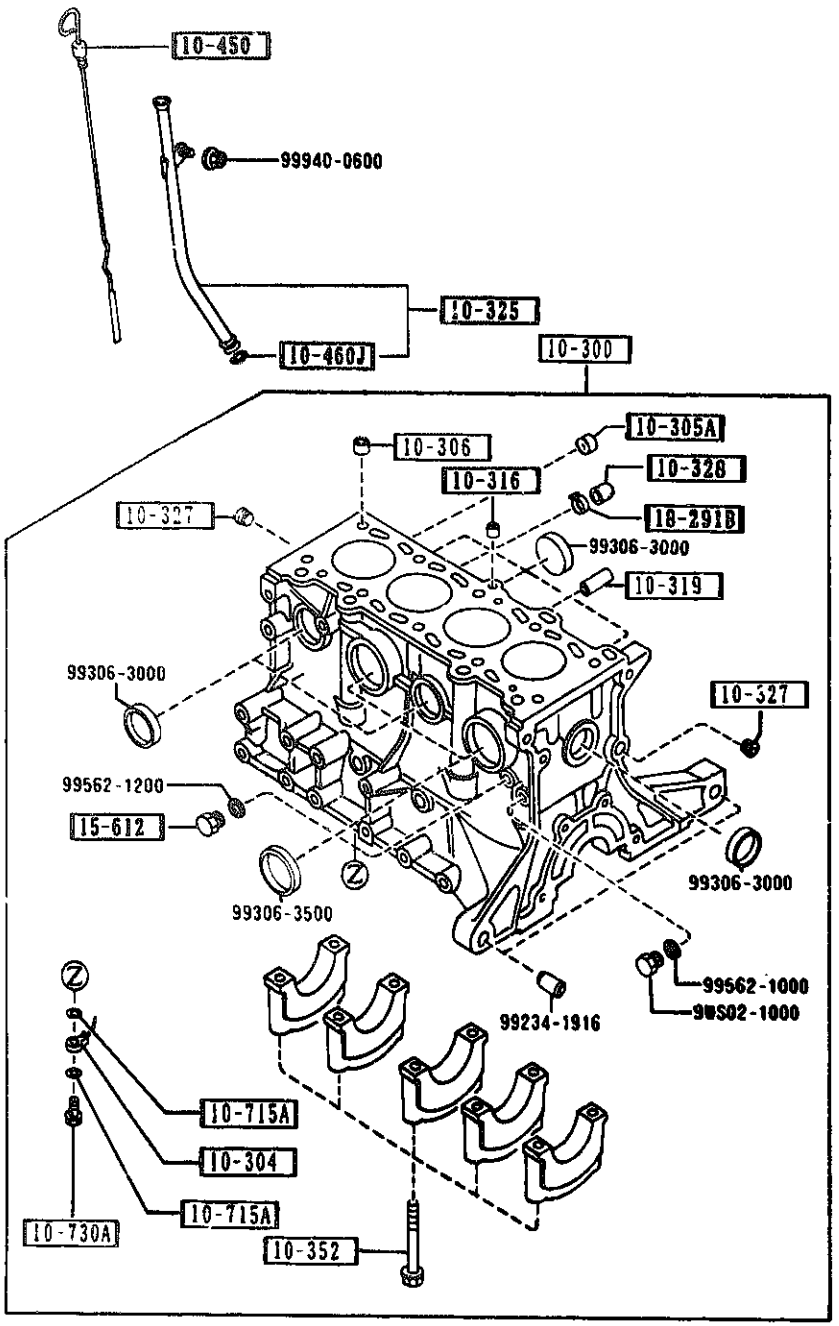

PART NO.	QTY	MODEL/RESTRICTION	MODEL/RESTRICTION	MODEL/RESTRICTION	FROM-TO
10-300		BLOCK,CYLINDER			
B6A7-10-300G	1				-9330
B64J-10-300	1				9330-
10-304		JET,OIL			
B660-10-580A	4				
10-305A		PLUG			
B366-10-305	1				9330-
10-306		PIN,TUBULAR			
B630-10-306	2				
10-316		PLUG,OIL CONTROL			
B630-10-305	1				-9330
10-319		JOINT			
B630-10-319	1				
10-325		PIPE,OIL LEVEL GAUGE			
B61P-10-440	1				
10-327		PLUG,BLIND			
0221-10-327	2				
10-32?		COVER,BLIND-CYL. BLOCK			
B660-10-328	1				
10-352		BOLT,BEARING CAP			
B630-10-352	10				
10-450		GAUGE,OIL LEVEL			
B61P-10-450B A (B61P-10-450C)	1				-9825
B61P-10-450C	1				9825-
10-460J		RING,'O'			
99541-00907	1				
10-715A		GASKET,OIL JET			
SE01-10-715	8				

9330 NA35**-100072
9825 NA35**-118378

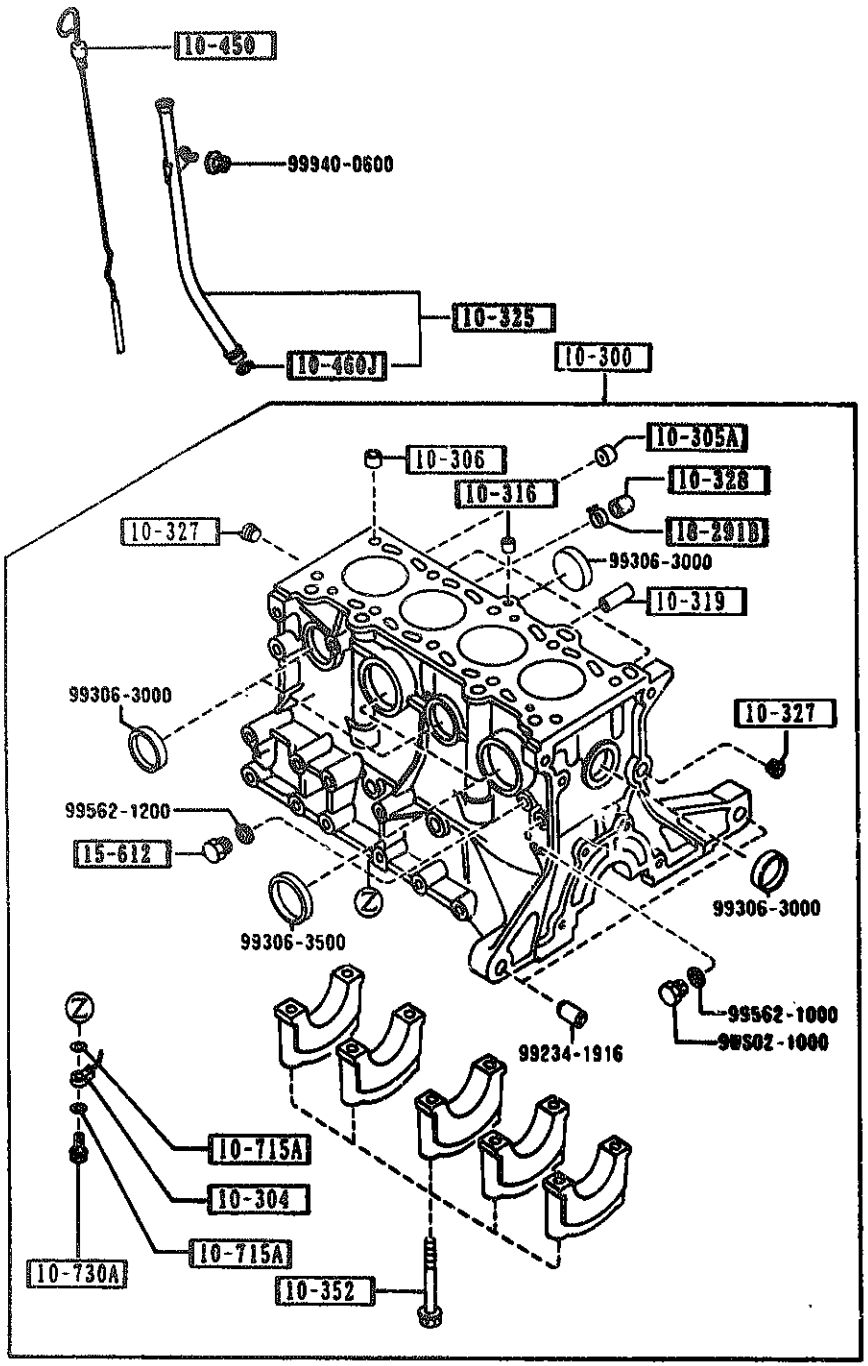

PART NO.	QTY	MODEL/RESTRICTION	MODEL/RESTRICTION	MODEL/RESTRICTION	FROM-TO
10-730A		VALVE,OIL JET			
SE01-10-730	4				
15-612		PLUG			
SE01-15-612	1				
16-291B		CLAMP,HOSE			
R230-15-538	1				

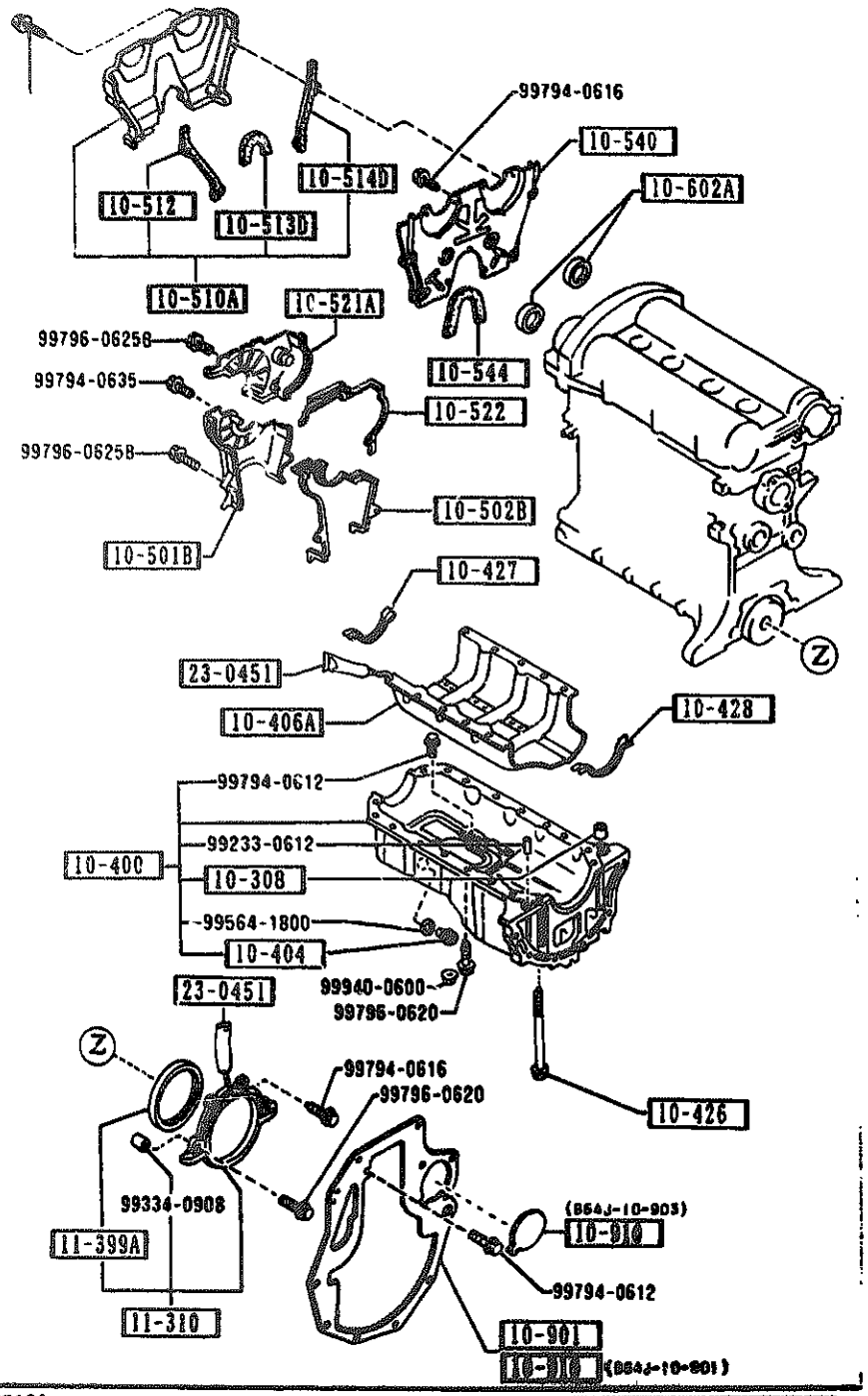

PART NO.	QTY	MODEL/RESTRICTION	MODEL/RESTRICTION	MODEL/RESTRICTION	FROM-TO
10-308		PIN,TUBULAR			
B6F4-10-308	1				
10-400		PAN,OIL			
B6Y0-10-400B A (B6Y0-10-400C)	1				-0201
B6Y0-10-400C	1				0201-
10-404		PLUG,DRAIN			
B6S7-10-404 (B6S7-10-404A)	1				-0201
B6S7-10-404A	1				0201-
10-406A		PLATE,OIL BAFFLE-CYL . BLK			
B61P-10-40YA	1				
10-426		BOLT			
B6S7-10-465	2				
10-427		GASKET,OIL PAN			
B6F4-10-427	1				
10-428		GASKET,OIL PAN			
B6F4-10-428	1				
10-501B		COVER,TIMING BELT-LWR			
B660-10-501D	1				
10-502B		GASKET,T.B.COVER LWR			
B660-10-502B	1	NON ASBESTOS			
10-510A		COVER(UP.),TIMING CHAIN			
B61P-10-510	1				
10-512		GASKET(L)			
B61P-10-512	1	NON ASBESTOS			
10-513D		GASKET(INN),TIMING BELT(L)			
B61P-10-513	1	NON ASBESTOS			

0201 NA35##-137180

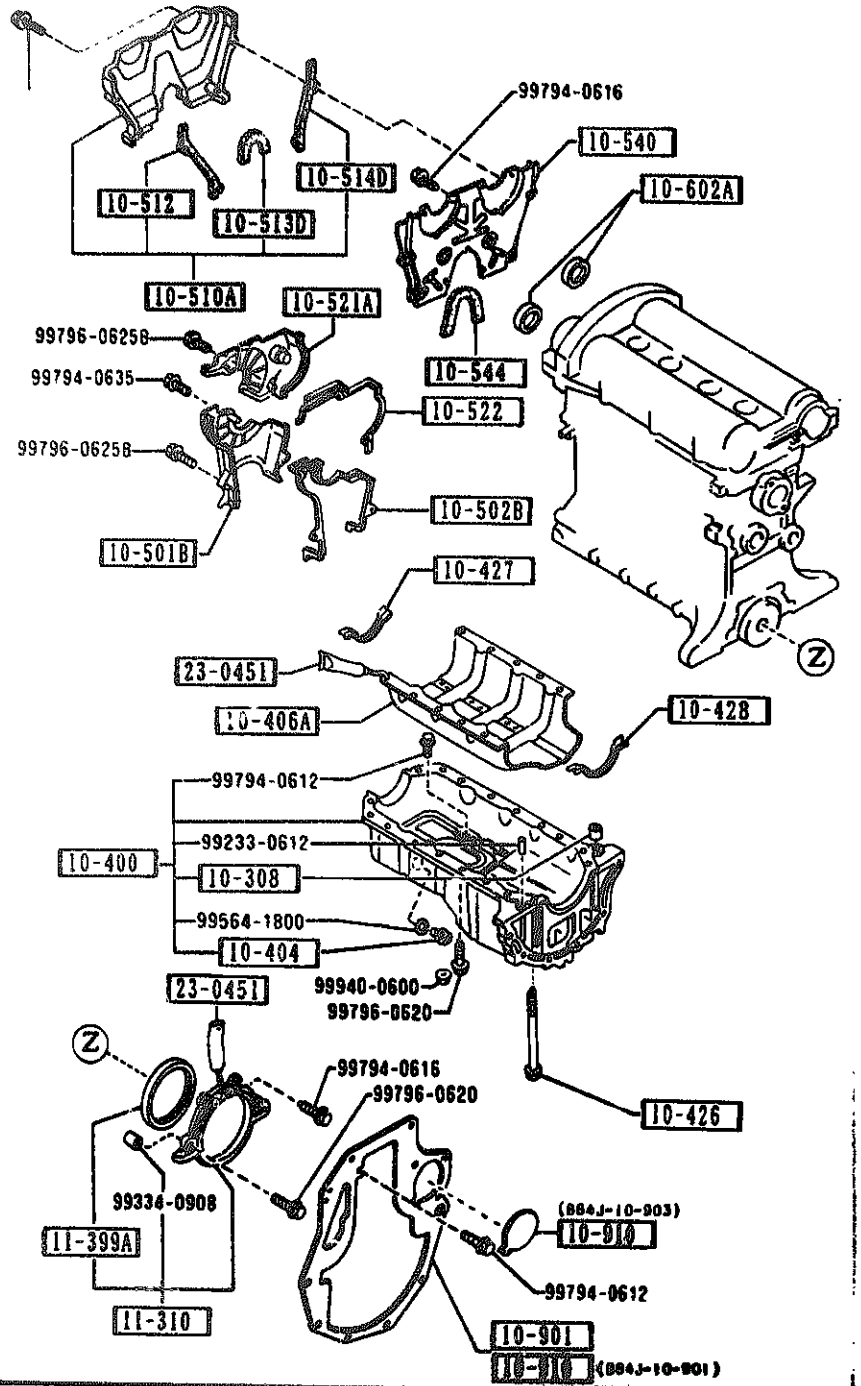

PART NO.	QTY	MODEL/RESTRICTION	MODEL/RESTRICTION	MODEL/RESTRICTION	FROM 10
10-514D		GASKET(C),TIMING BELT(L)			
B61P-10-514	1	NON ASBESTOS			
10-521A		CGVER,TIMING BELT-C.			
B660-10-521A AN(B660-10-521B)	1				-9626
B660-10-521B	1				9626-
10-522		GASKET,T.BELT COVER-C.			
B660-10-522	1	NON ASBESTOS			
10-540		PLATE,SEAL-T.BELT COVER U			
B61P-10-540B	1				
10-544		RUBBER,SEAL-SEAL PLATE			
B61P-10-544	1				
10-602A		SEAL,OIL			
F801-10-602	2				
10-901		PLATE,END			
B61P-10-901 A (B61P-10-901A)	1				-9701
B61P-10-901A	1	(MT)			9701-
10-910		COVER,END PLATE			
B64J-10-901	1	(AT)			
B64J-10-903	1	(AT)			
11-310		COVER,REAR			
B366-11-310 A (B366-11-310B)	1				-9701
B366-11-310B	1				9701-
11-399A		SEAL,OIL-CRANKSHAFT			
B630-11-312	1				
23-0451		TUBE,SILICON			
8527-77-739	1				

9626 NA35**-111021
9701 NA35**-111969

1100 -1 PISTON,CRANKSHAFT & FLYWHEEL

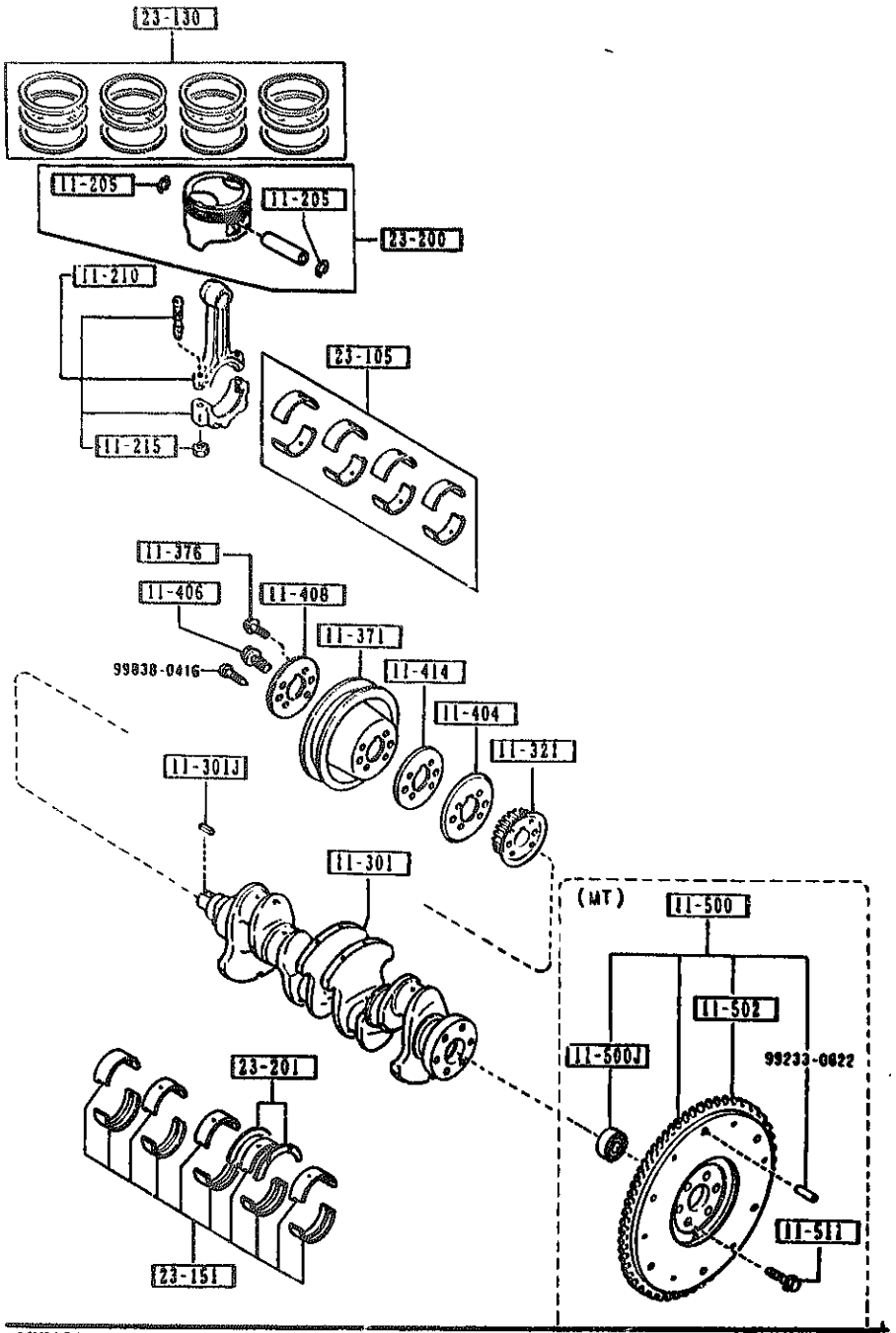

PART NO.	QTY	MODEL/RESTRICTION	MODEL/RESTRICTION	MODEL/RESTRICTION	FROM-TO
11-205		CLIP			
0221-11-205	8				
11-210		ROD,CONNECTING			
B6S7-11-210D	4				
11-215		NUT,CONNECTING ROD			
B6S7-11-215A	8				
11-301		CRANKSHAFT			
B616-11-300B	1				
11-301J		KEY,WOODRUFF-PULLEY			
B630-11-317 A (B630-11-317A)	1				-0101
B630-11-317A	1				0101-
11-321		PULLEY,TIMING BELT			
B366-11-321A	1				
11-371		PULLEY,CRANKSHAFT			
B6S7-11-401A	1				
11-376		BOLT,PULLEY			
B631-11-405	4				
11-404		PLATE,TIMING BELT GUIDE			
B541-11-404	1				
11-406		BOLT,LOCK-C.SHAFT PULLEY			
B630-11-406C	1				
11-408		PLATE,CRANKSHAFT PULLEY			
B630-11-408B	1				
11-414		PLATE(OUT),TIMING BELT			
B631-11-414	1				
11-500		WHEEL,FLY			
B61P-11-500	1	(MT)			

0101 NA35##-133591

1100 PISTON,CRANKSHAFT & FLYWHEEL

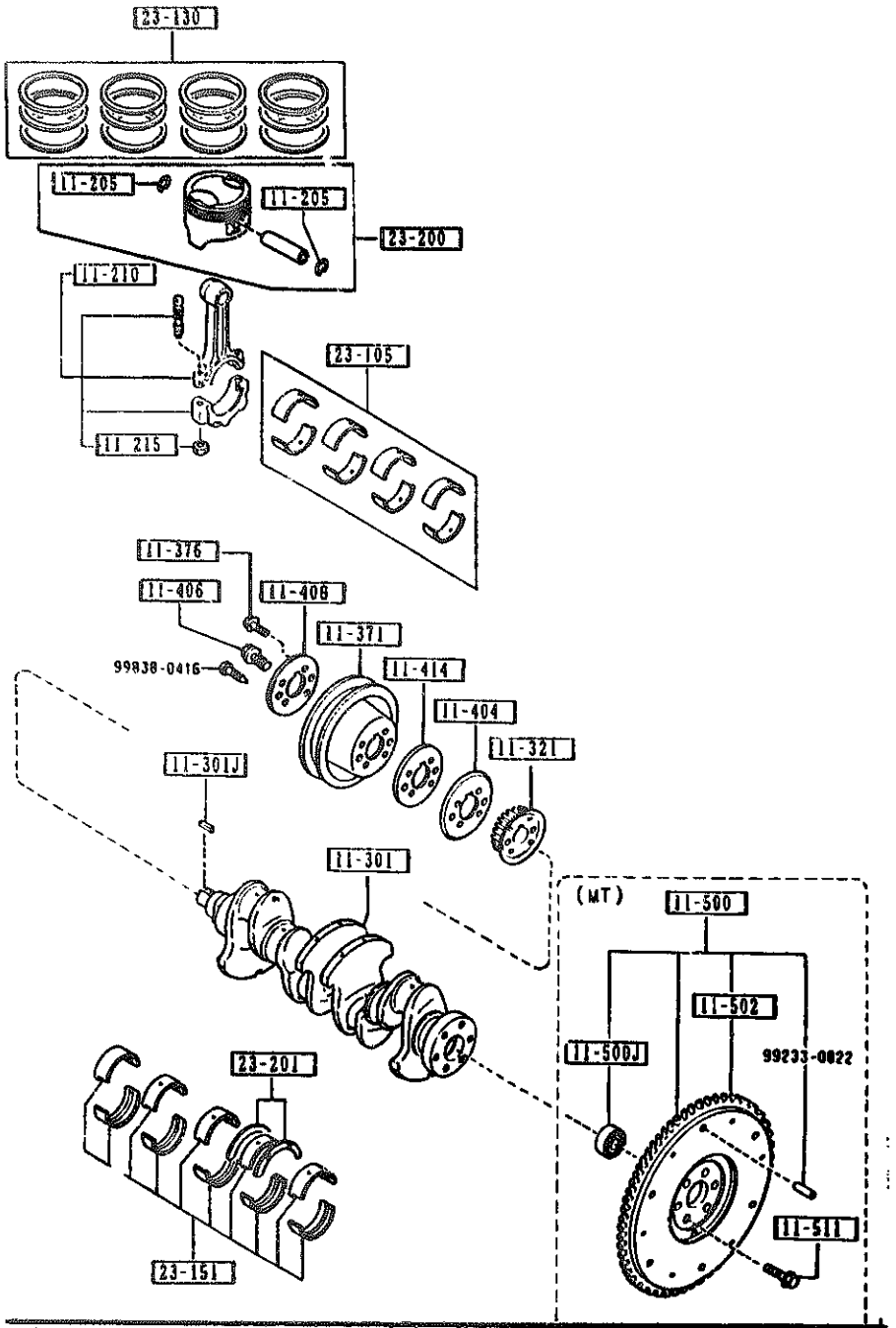

PART NO.	QTY	MODEL/RESTRICTION	MODEL/RESTRICTION	MODEL/RESTRICTION	FROM-TO
11-500J		BEARING,BALL-FLY WHEEL			
F801-11-303	1	(MT)			
11-502		GEAR,RING-FLY WHEEL			
8367-11-502	1	(MT)			
11-511		BOLT,LOCK-FLY WHEEL			
F201-11-511	6	(MT)			
23-105		METAL SET,CONN.ROD			
B6Y1-11-SE0	1	STD.			
B6Y1-11-SFX	1	O.S. 0.50			
B6Y1-11-SFY	1	O.S. 0.75			
B6Y1-11-SF0	1	O.S. 0.25			
23-130		RING SET,PISTON			
B6Y3-11-SC0	1	STD. (AT)			
B6Y3-11-SDX	1	O.S. 0.50 (AT)			
B6Y3-11-SD0	1	O.S. 0.25 (AT)			
B6Y4-11-SC0 A (B6Y4-11-SC0A)	1	STD.			-9A04
B6Y4-11-SDX A (B6Y4-11-SDXA)	1	O.S. 0.50			-9A04
B6Y4-11-SD0 A (B6Y4-11-SD0A)	1	O.S. 0.25			-9A04
B6Y4-11-SC0A	1	STD. (MT)			9A04-
B6Y4-11-SDXA	1	O.S 0.50 (MT)			9A04-
B6Y4-11-SD0A	1	O.S 0.25 (MT)			9A04-
23-151		METAL SET,MAIN BRG.			
B6Y2-11-SG0	1	STD.			
B6Y1-11-SHX	1	O.S. 0.50			

9A04 NA35NN-123222

1100 PISTON,CRANKSHAFT & FLYWHEEL

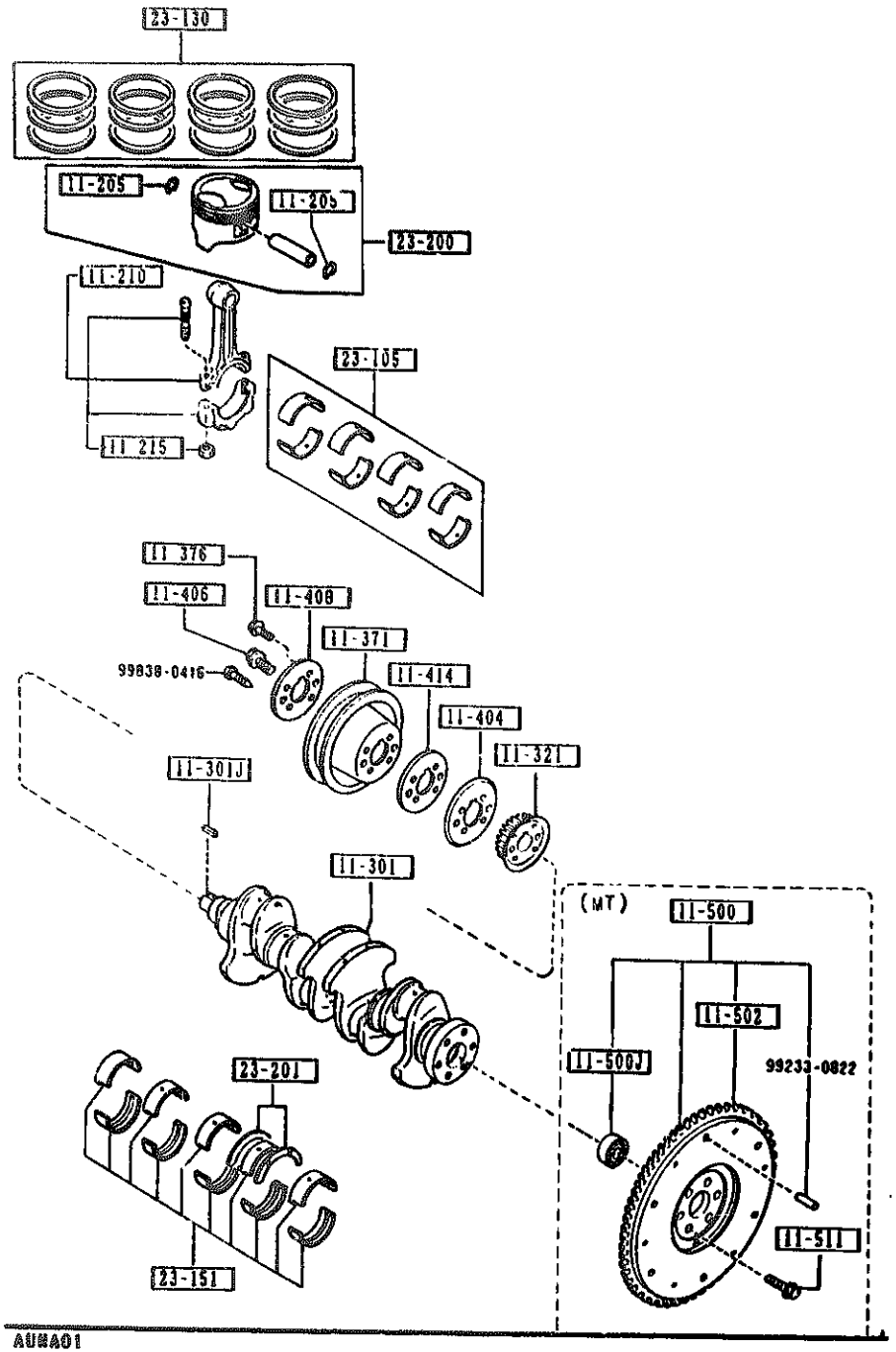

PART NO.	QTY	MODEL/RESTRICTION	MODEL/RESTRICTION	MODEL/RESTRICTION	FROM-TO
CONT'D					
B6Y1-11-SH0	1	O.S. 0.25			
23-200		PISTON SET			
B6Z5-11-SA0	4	STD. (AT)			
B6Z5-11-SBX	4	O.S. 0.50 (AT)			
B6Z5-11-SB0	4	O.S. 0.20 (AT)			
B6Z2-11-SA0B A (B6Z2-11-SA0C)	4	STD.			-9601
B6Z2-11-SBXB A (B6Z2-11-SBXC)	4	O.S. 0.50			-9601
B6Z2-11-SB0B A (B6Z2-11-SB0C)	4	O.S. 0.25			-9601
B6Z2-11-SA0C	4	STD. (MT)			9601-
B6Z2-11-SBXC	4	O.S. 0.50 (MT)			9601-
B6Z2-11-SB0C	4	O.S. 0.25 (MT)			9601-
23-201		METAL SET,THRUST			
B6Y0-11-SJ0 A (B6Y1-11-SJ0)	1	STD.			-0405
B6Y0-11-SKX A (B6Y1-11-SKX)	1	O.S. 0.50			-0405
B6Y0-11-SKY	1	O.S. 0.75			-0405
B6Y0-11-SK0 A (B6Y1-11-SK0)	1	O.S. 0.25			-0405
B6Y1-11-SJ0	1	STD.			0405-
B6Y1-11-SKX	1	O.S. 0.50			0405-
B6Y1-11-SKY	1	O.S. 0.75			0405-
B6Y1-11-SK0	1	O.S. 0.25			0405-

9601 NA35##-106797
0405 NA35##-147140

1200 -1 VALVE SYSTEM

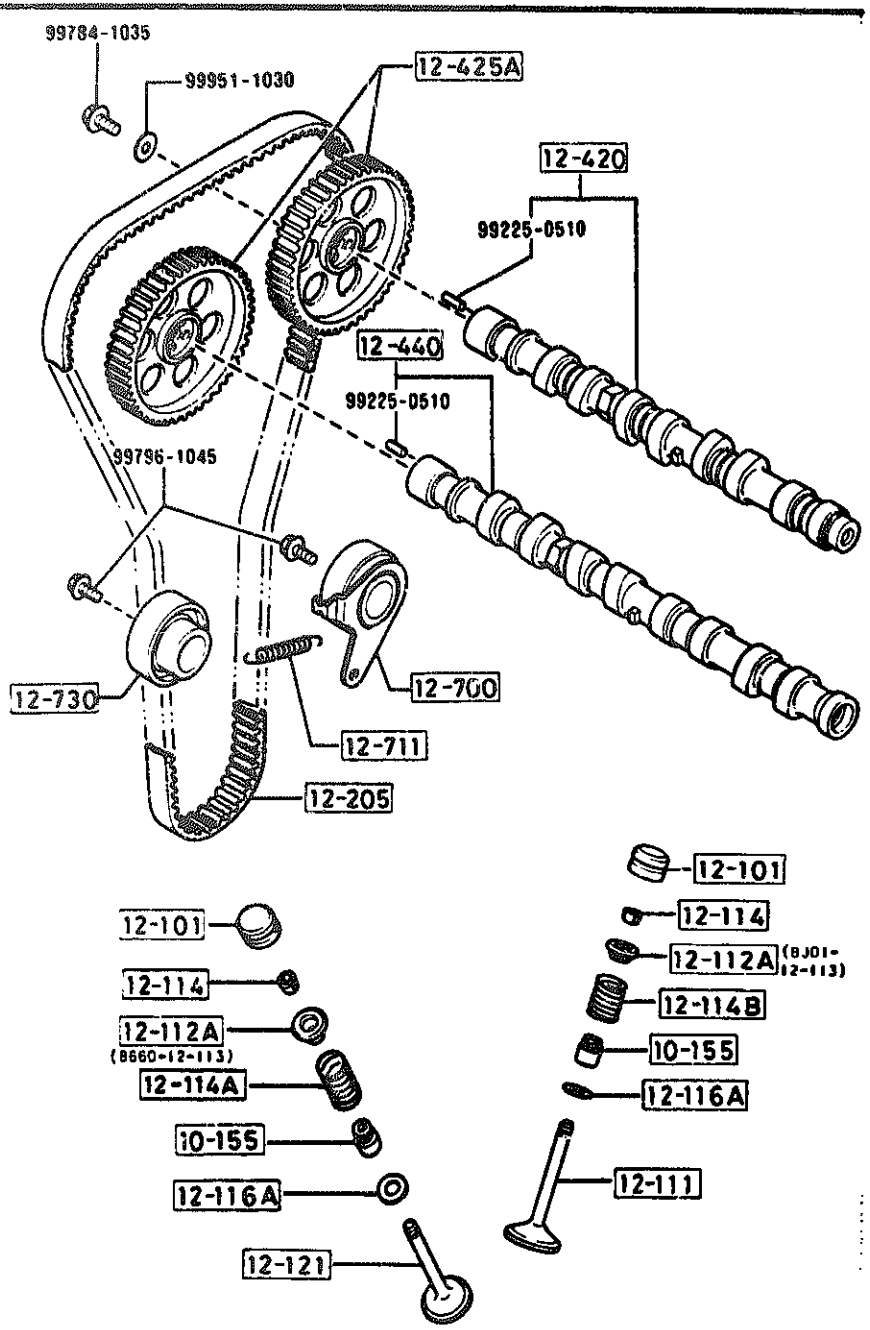

PART NO.	QTY	MODEL/RESTRICTION	MODEL/RESTRICTION	MODEL/RESTRICTION	FROM-TO
10-155		SEAL,VALVE			
B660-10-155	16				
12-101		ADJUSTER,HYDRAULIC L ASH			
B660-12-101	16	NITTAN VALVE			
12-111		VALVE,INLET			
B6S7-12-111	8				
12-112A		SEAT,VALVE SPG-UP.			
BJ01-12-113	8				
B660-12-113	8				
12-114		COTTER,VALVE			
B660-12-114	32				
12-114A		SPRING,OUT.-VALVE			
B61P-12-125	8				
12-114B		SPRING,VALVE			
BJ01-12-125	8				
12-116A		SEAT,VALVE SPG.-LWR			
B660-12-123	16				
12-121		VALVE,EXHAUST			
B660-12-121	8				
12-205		BELT,TIMING			
B6S7-12-205A	1				
12-420		CAMSHAFT			
B64J-12-420	1	(AT)			
B660-12-420C	1	(MT)			
12-425A		PULLEY,CAMSHAFT			
B6S7-12-425A	2				
12-440		CAMSHAFT,EXHAUST			
B6A7-12-440A	1	(AT)			

SECTION NAME INDEX (ENGINE)

LO.NO	SEC.NO	SECTION NAME	LO.NO	SEC.NO	SECTION NAME	LO.NO	SEC.NO	SECTION NAME
1-C03	1000	SHORT ENGINE & GASKET SETS						
1-D03	1010	CYLINDER HEAD & COVER						
1-G03	1030	CYLINDER BLOCK						
1-I03	1040	OIL PAN & TIMING COVER						
1-K03	1100	PISTON,CRANKSHAFT & FLYWHEEL						
1-N03	1200	VALVE SYSTEM						
1-D04	1300	INLET MANIFOLD						
1-E04	1310	EXHAUST MANIFOLD						
1-F04	1320	FUEL SYSTEM						
1-H04	1325	FUEL DISTRIBUTOR						
1-I04	1330	AIR CLEANER						
1-K04	1364	THROTTLE BODY						
1-L04	1370	EMISSION CONTROL SYSTEM (INLET SIDE)						
1-M04	1399	CAP & HOSE CLIP (INLET & EXHAUST SIDE)						
1-N04	1400	OIL PUMP & FILTER						
1-C05	1500	COOLING SYSTEM						
1-G05	1580	BRACKET,PULLEY & BELT						
1-C06	1600	CLUTCH DISC & COVER (MANUAL)						
1-D06	1700	TRANSMISSION CASE (MANUAL)						
1-E06	1710	TRANSMISSION GEARS(MANUAL)						
1-J06	1720	CHANGE CONTROL SYSTEM (MANUAL)						
1-M06	1800	ENGINE ELECTRICAL SYSTEM						
1-C07	1830	ALTERNATOR						
1-E07	1840	STARTER						
1-G07	1850	BATTERY						
1-H07	1910	TORQUE CONVERTER,OIL PUMP & PIPINGS (AUTOMATIC)						
1-K07	1920	TRANSMISSION CASE & MAIN CONTROL SYSTEM (AUTOMATIC)						
1-E08	1925	CONTROL VALVE (AUTOMATIC)						
1-I08	1930	CLUTCHES & PLANETARY GEARS (AUTOMATIC)						
1-D09	1940	GOVERNOR, LOW & REVERSE PISTON (AUTOMATIC)						
1-G09	1950	MANUAL LINKAGE SYSTEM (AUTOMATIC)						
1-I09	1960	GASKET & SEAL KIT (AUTOMATIC)						

1200 -2 M VALVE SYSTEM

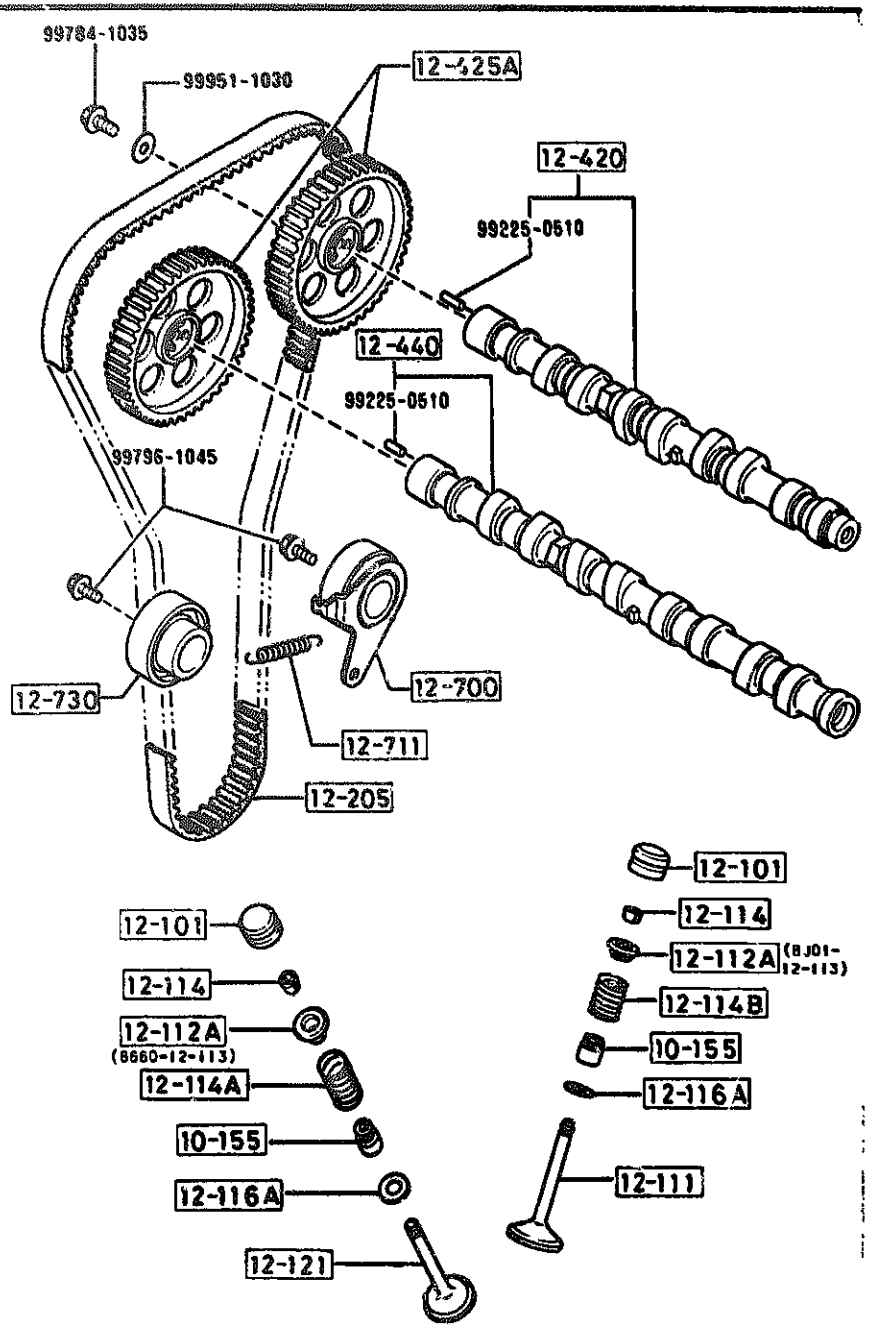

PART NO.	QTY	MODEL/RESTRICTION	MODEL/RESTRICTION	MODEL/RESTRICTION	FROM TO
CONT'D					
B61P-12-440	1	(MT)			
12-700		TENSIONER,T.BELT			
B660-12-700C	1				
12-711		SPRING,TENSIONER			
B660-12-711C	1				
12-730		IDLER,TIMING BELT			
B660-12-730B	1				

1300 INLET MANIFOLD

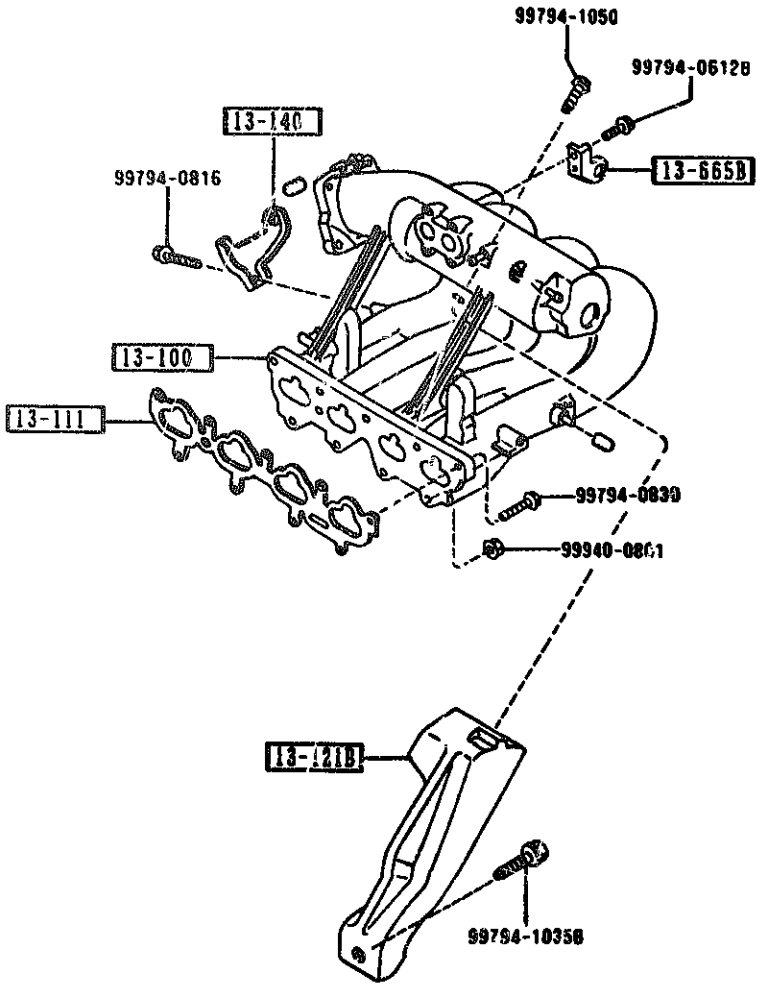

* NOTES : REFER TO SECT.NO.1399 AS FOR CAPS.

PART NO.	QTY	MODEL/RESTRICTION	MODEL/RESTRICTION	MODEL/RESTRICTION	FROM-TO
13-100		MANIFOLD,INLET			
B61P-13-100B A (B61P-13-100C)	1				-9417
B61P-13-100C AN(B61P-13-100D)	1				9417-0404
B61P-13-100D	1				0404-
13-111		GASKET,IN.MANIFOLD			
B61P-13-111	1	NON ASBESTOS			
13-121B		STAY,MANIFOLD			
B61P-13-121	1				
13-140		BRKT,SURGE TANK			
B61P-13-140	1				
13-665B		BRACKET,ACCEL WIRE			
B61P-13-665	1				

9417 KA35WA-100773
0404 WA35WA-146945

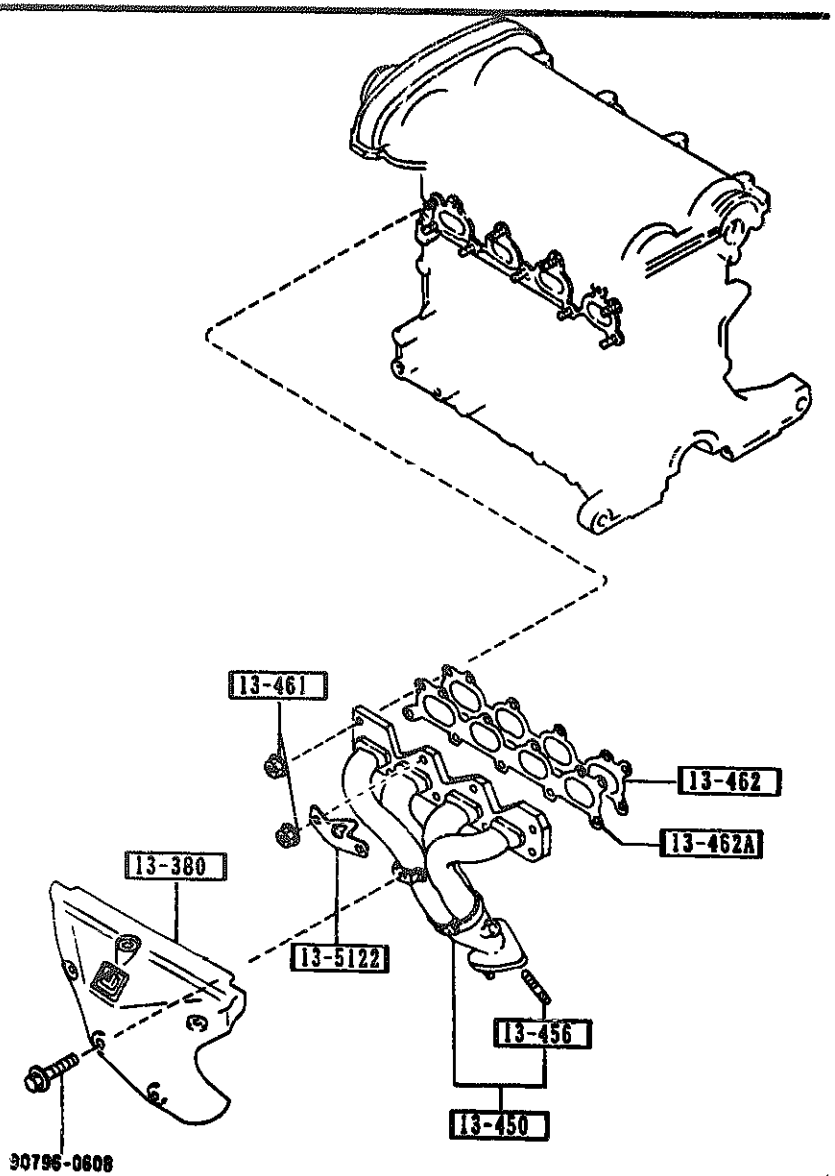

AUMA01

1310 -1 * EXHAUST MANIFOLD

PART NO.	QTY	MODEL/RESTRICTION	MODEL/RESTRICTION	MODEL/RESTRICTION	FROM-TO
13-380		INSULATOR,HEAT			
B61P-13-380A	1				-9C01
B61P-13-380B	1				9C01-
13-450		MANIFOLD,EXHAUST			
B61P-13-450 A (B61P-13-450A)	1				-9714
B61P-13-450A	1				9714-
13-456		STUD			
2306-13-456	3				
13-461		NUT,EX.MANIFOLD			
B6S7-13-465	9				
13-462		GASKET,EX.MANIFOLD			
B695-13-460 A (B695-13-460A)	1	NON ASBESTOS			-9801
B695-13-460A	1	NON ASBESTOS			9801-
13-462A		GASKET,EX.MANIFOLD			
B695-13-462	1				
13-5122		BRACKET,EX.MANIFOLD			
B61P-13-468	1				9C01-

9714 NA35**-113830
9801 NA35**-116316
9C01 NA35**-138310

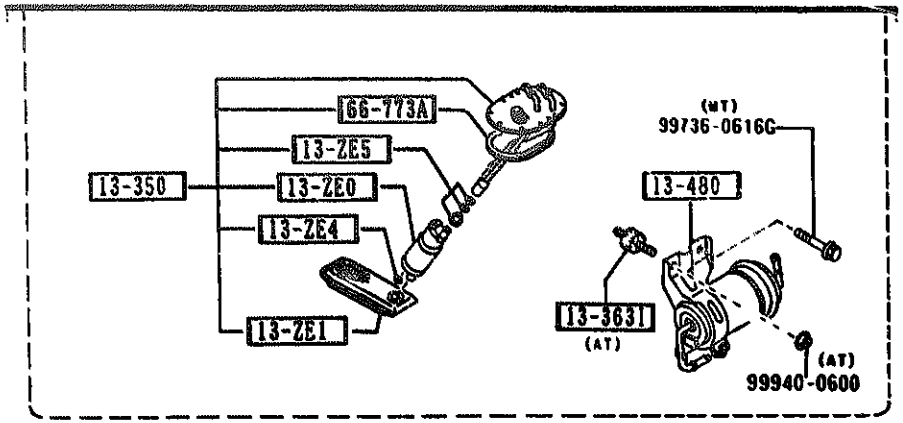

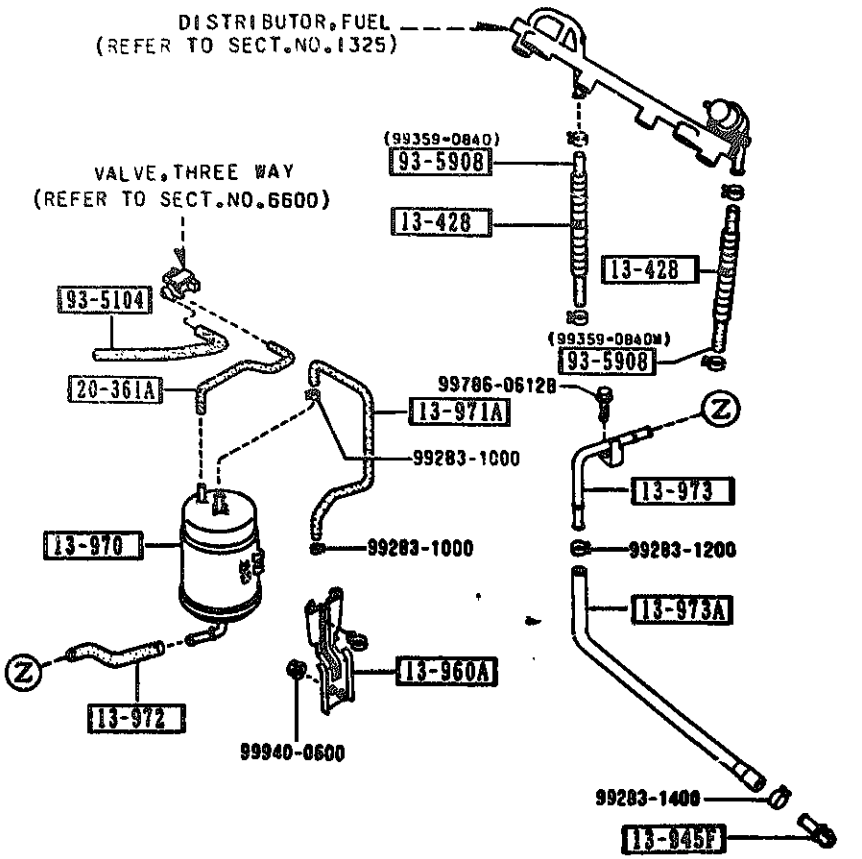

* NOTES : REFER TO SECT.NO.1399 AS FOR HOSE CLIPS.

AUNA01

PART NO.	QTY	MODEL/RESTRICTION	MODEL/RESTRICTION	MODEL/RESTRICTION	FROM-TO
13-ZE0		PUMP,FUEL			
B61P-13-ZE9	1				
13-ZE1		FILTER,FUEL PUMP			
B61P-13-ZE1	1				
13-ZE4		WASHER,LOCK-PUMP FILTER			
FEH2-13-ZE4	1	DENSO			
13-ZE5		RING,'O'-FUEL PUMP			
BJ04-13-ZE5	1				-9511
B61P-13-ZE5	1				9511-
13-350		PUMP,FUEL			
B61P-13-350B	1				
13-3631		RUBBER,INSULATION			
N326-13-363B	2	(AT)			
13-428		PROTECTOR			
B61P-13-428	2				
13-480		FILTER,FUEL			
B61P-20-490	1				
13-945F		CONNECTOR			
JE16-13-298	1				
13-960A		BRACKET,CANISTER			
B61P-13-960	1				
13-970		CANISTER			
B61P-13-970	1				
13-971A		HOSE,VACUUM			
B61P-13-971	1				
13-972		HOSE,EVAPORATION			
B61P-13-972A	1				

9511 NA35##-103176

1320 -2 M FUEL SYSTEM

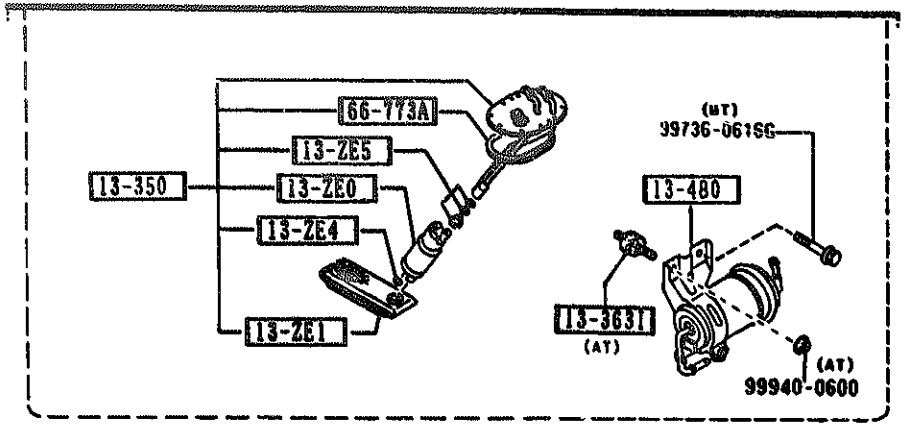

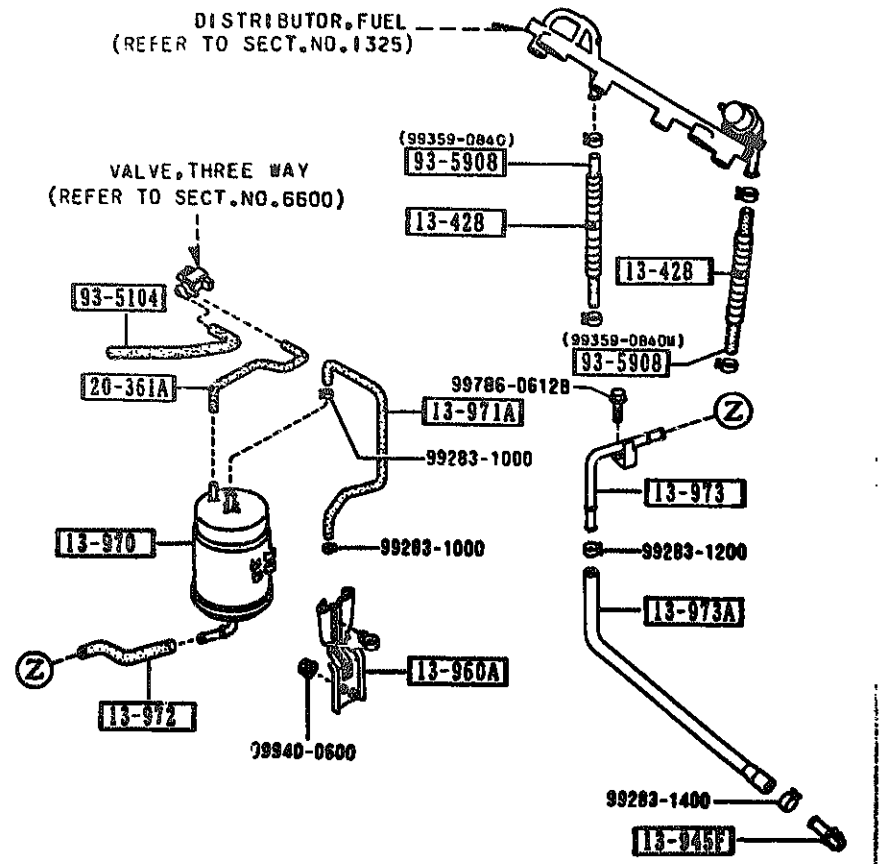

* NOTES : REFER TO SECT.NO.1399 AS FOR HOSE CLIPS.

AUNA01

PART NO.	QTY	MODEL/RESTRICTION	MODEL/RESTRICTION	MODEL/RESTRICTION	FROM-TO
13-973		HOSE,DRAIN			
B61P-13-97YA	1				
13-973A		HOSE,EVAPORATION			
B61P-13-973A	1				
20-361A		TUBE,VACUUM			
B61P-20-361	1				
66-773A		GASKET			
NA01-60-962	1				
93-5104		HOSE			
99351-04999	1				
93-5908		HOSE			
99359-0840	1				
99359-0840M	1				

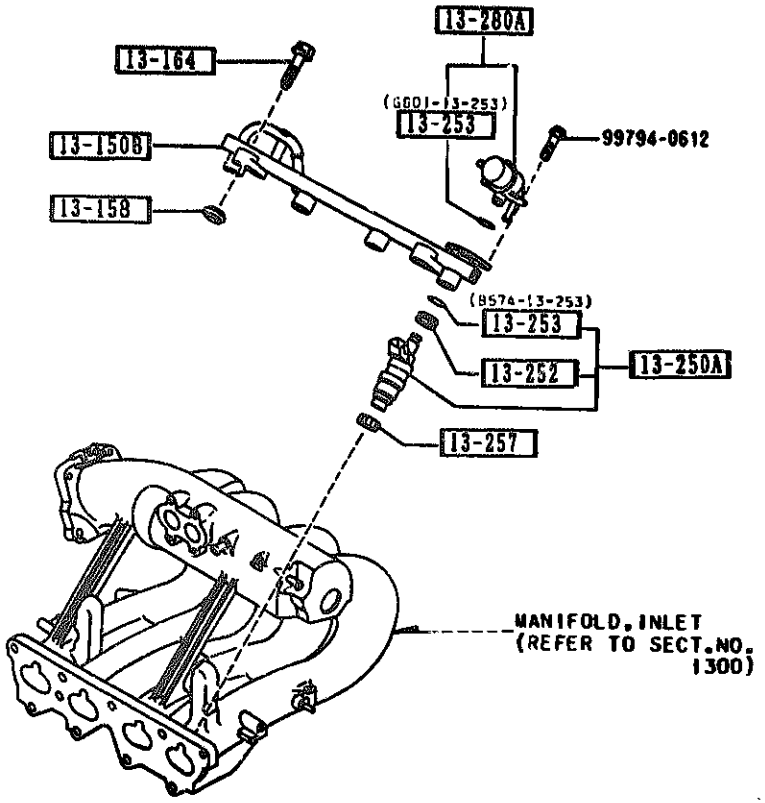

PART NO.	QTY	MODEL/RESTRICTION	MODEL/RESTRICTION	MODEL/RESTRICTION	FROM-TO
13-150B		DISTRIBUTOR,FUEL			
B61P-13-150	1				
13-158		INSULATOR,FUEL DIST.			
B675-13-158	2				
13-164		BOLT,FUEL DISTRIBUTOR			
F8B3-13-164	2				
13-250A		INJECTOR,FUEL			
B6S7-13-250	4				
13-252		GROMMET			
8574-13-252	4				
13-253		RING,'O'			
G601-13-253	1				
8574-13-253	4				
13-257		INSULATOR,INJECTION			
JE06-13-257	4				
13-280A		PRESSURE RG.,FUEL			
B61P-13-280	1				

1330 -1 AIR CLEANER

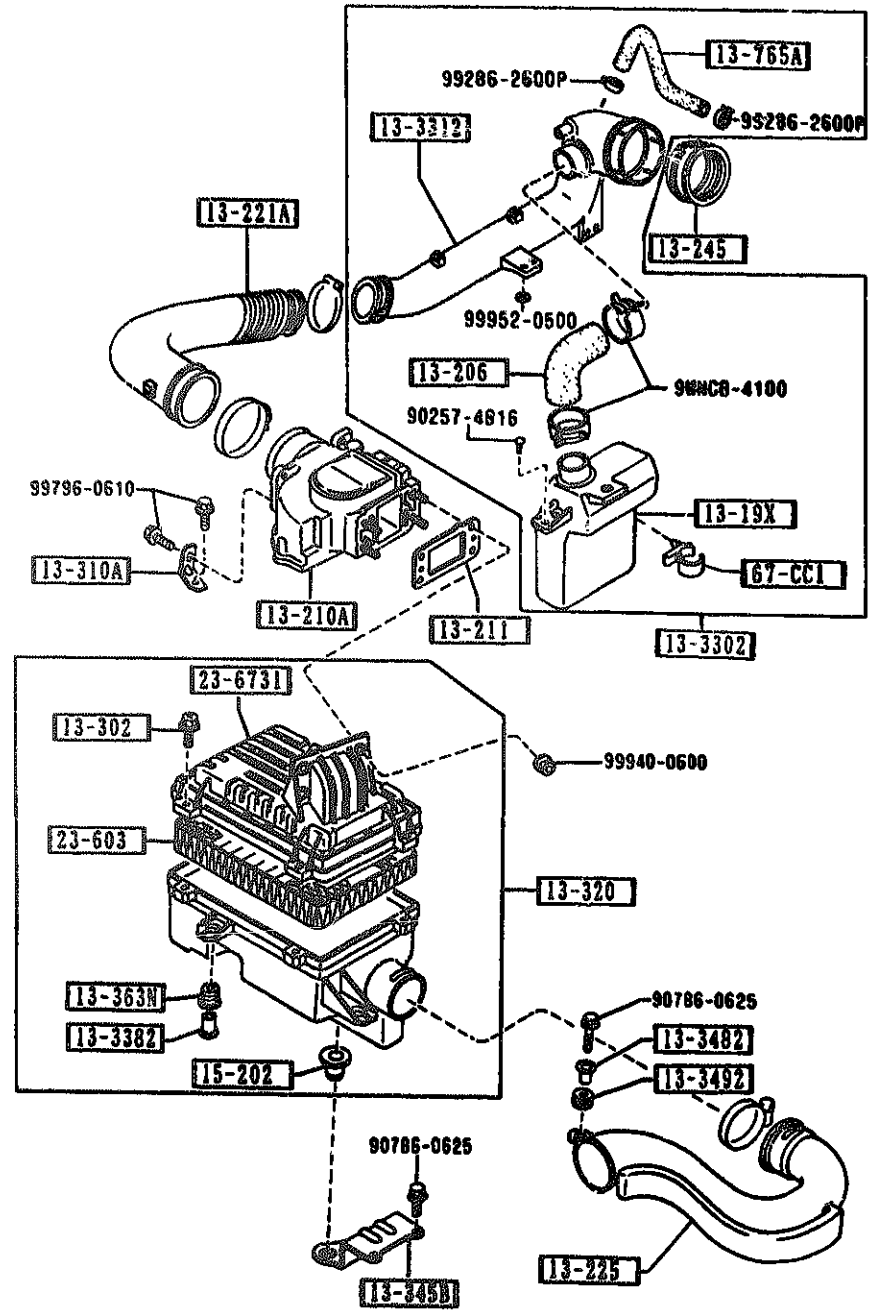

* NOTES : REFER TO SECT.NO.1399 AS FOR HOSE CLIPS.

PART NO.	QTY	MODEL/RESTRICTION	MODEL/RESTRICTION	MODEL/RESTRICTION	FROM-TO
13-19X		CHAMBER,RESONANCE			
B61P-13-19XA	1	(MT)			
B64J-13-19X	1	(AT)			
13-206		HOSE,AIR			
B61P-13-206A	1				
13-210A		METER,AIR FLOW			
B6S7-13-210A	1				
13-211		GASKET			
B6S7-13-211A	1	NON ASBESTOS			
13-221A		HOSE,AIR			
B61P-13-221B	1				
13-225		DUCT,FRESH AIR			
B61P-13-200A	1				-9926
A (B61P-13-200B)					
B61P-13-200B	1				9926-
13-245		JOINT,RUBBER			
B61P-13-245	1				
13-302		BOLT,AIR CLEANER			
F201-13-302A	5				
13-310A		BRKT,AIR FLOW METER			
B61P-13-311B	1				
13-320		CLEANER,AIR			
B61P-13-320	1				-9825
A (B61P-13-320A)					
B61P-13-320A	1				9825-
13-3302		TUBE,AIR INTAKE			
B61P-13-330E	1	(MT)			
B64J-13-330	1	(AT)			
13-3312		PIPE,AIR INTAKE			

9825 NA35**-118378
9926 NA35**-122894

1330 AIR CLEANER

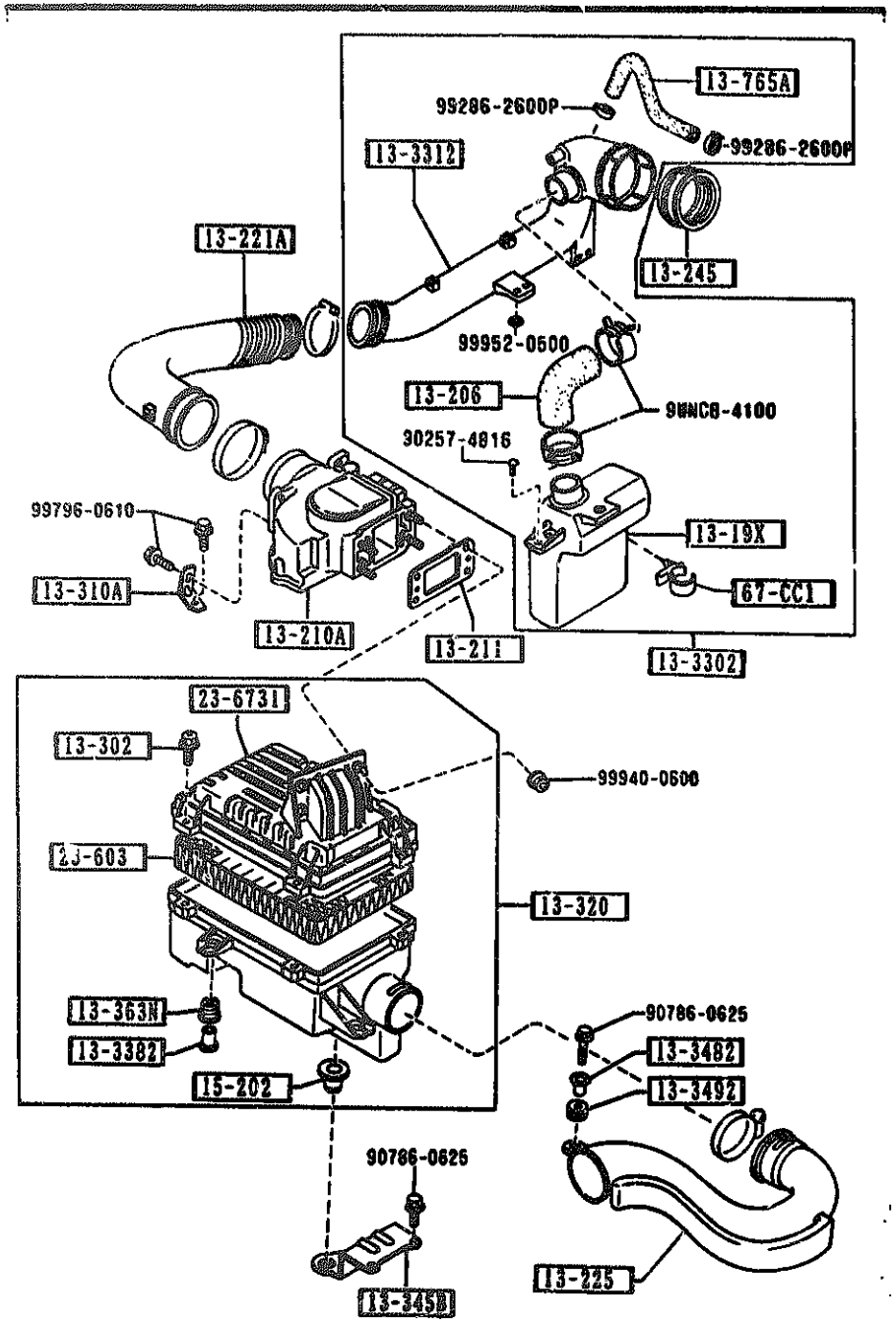

* NOTES : REFER TO SECT.NO.1399 AS FOR HOSE CLIPS.

AUMA01

PART NO.	QTY	MODEL/RESTRICTION	MODEL/RESTRICTION	MODEL/RESTRICTION	FROM-TO
CONT'D					
B61P-13-331B	1				
13-3382		SPACER			
FE51-13-329	3				
13-345B		BRACKET,AIR CLEANER			
B61P-20-211	1				
13-3482		SPACER,AIR INT.PIPE			
V115-13-348	1				-0201
SLA1-13-321	1				0201-
13-3492		INSULATOR			
S501-13-349	1				
13-363N		RUBBER,MOUNTING			
FE51-13-363	3				
13-765A		HOSE,AIR			
B61R-13-765	1				
15-202		RUBBER,MOUNT			
E501-15-202	1	DENSO			
23-603		ELEMENT,AIR CLEANER			
B6S7-13-Z40	1				
23-6731		COVER,AIR CLEANER			
B61P-13-Z01	1				
67-CC1		CLIP,HARNESS			
NA02-67-CM1	1				

0201 NA35MM-137180

CAT. AUMA01-07

1992-02

1364 -1 H THROTTLE BODY

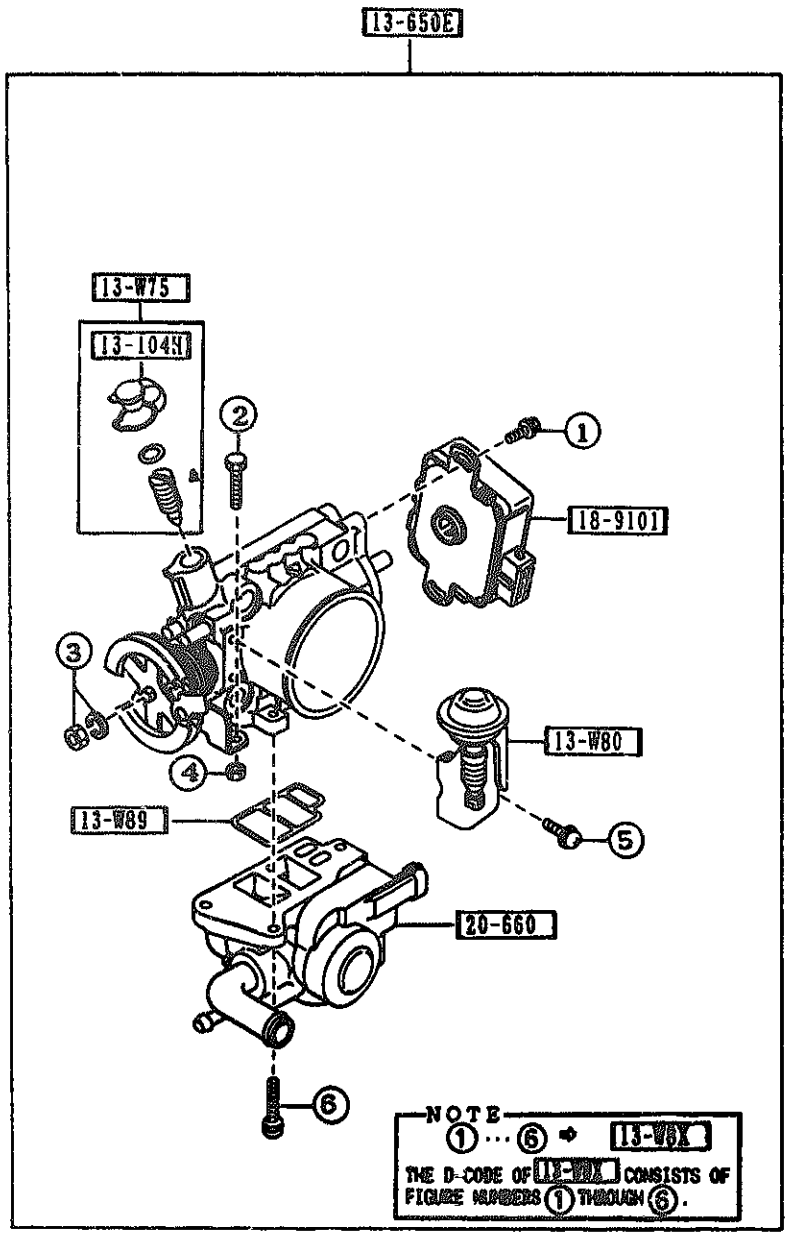

PART NO.	QTY	MODEL/RESTRICTION	MODEL/RESTRICTION	MODEL/RESTRICTION	FROM-TO
13-W75		SCREW SET,IDLE ADJUST-THR			
B551-13-W75A	1				
13-W8X		SCREW & WASHER SET			
B551-13-W8X	1				
13-W80		BRACKET SET,DASH POT-THRO			
B6[illegible]-13-W80	1				
13-W89		GASKET,THERMO			
B551-13-W89	1				
13-104H		CAP,BLIND			
B551-13-104	1				
13-650E		BODY,THROTTLE			
B61P-13-640B	1	(MT)			
B64J-13-640	1	(AT)			
18-9101		SENSOR,THROTTLE			
B6S8-18-911	1	(AT)			
B630-18-911	1	(MT)			
20-660		VALVE,BY-PASS AIR CONTROL			
B61P-20-660	1				

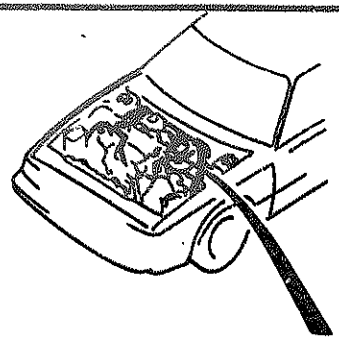

93-5104	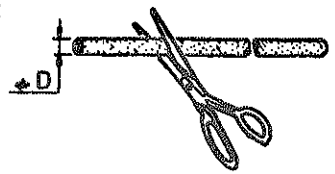	99351-04999	D=4MM

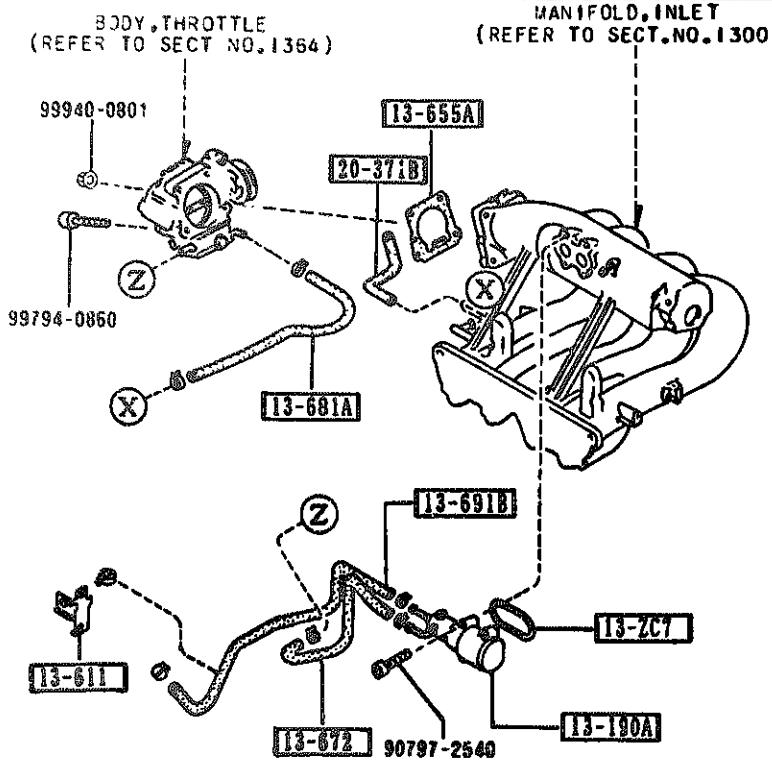

* NOTES : REFER TO SECT.NO.1399 AS FOR HOSE CLIPS.

AUNA01

PART NO.	QTY	MODEL/RESTRICTION	MODEL/RESTRICTION	MODEL/RESTRICTION	FROM-TO
13-ZC7		RING,'O'-AIR VALVE			
B6S7-13-ZC7	1				
13-190A		VALVE,AIR			
B61P-13-190A	1	(MT)			
B64J-13-190	1	(AT)			
13-611		BRACKET			
B61P-13-685A	1				
13-655A		GASKET			
B6S7-13-655	1	NON ASBESTOS			
13-672		HOSE,WATER			
B61P-13-682A	1				
13-681A		HOSE,WATER			
B61P-13-681B	1				
13-691B		HOSE,WATER			
B61P-13-691A	1				
20-371B		TUBE,VACUUM			
B61P-20-371	1				
93-5104		HOSE			
99351-04999	1				

1399 -1 * CAP & HOSE CLIP (INLET & EXHAUST SIDE)

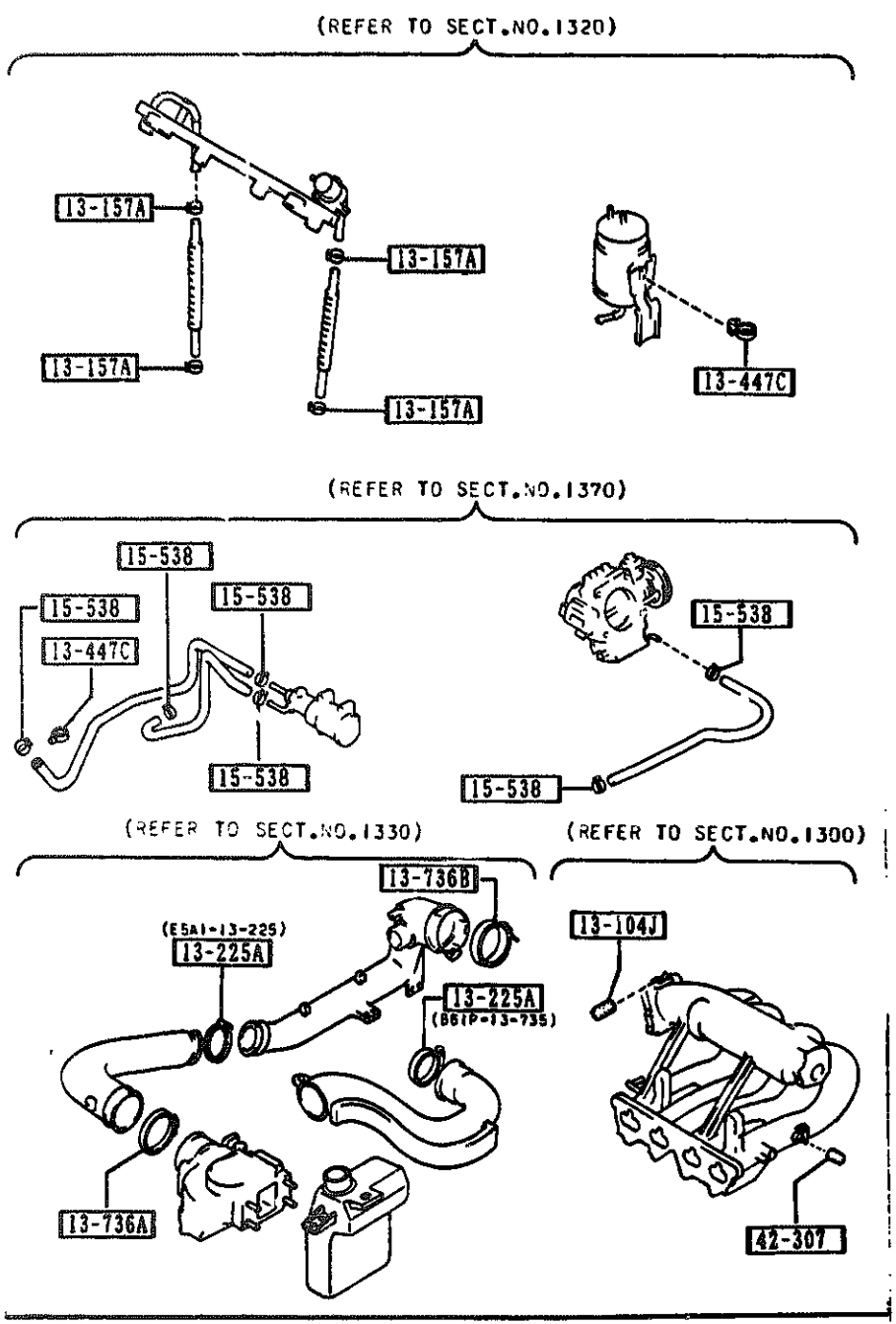

PART NO.	QTY	MODEL/RESTRICTION	MODEL/RESTRICTION	MODEL/RESTRICTION	FROM-TO
13-104J		CAP,BLIND			
1010-13-104	1				
13-157A		CLIP			
8574-13-157	4				
13-225A		CLAMP,HOSE			
E5A1-13-225	1				
B61P-13-735	1				
13-447C		CLAMP,HOSE			
B61P-13-447	2				
13-736A		CLAMP,HOSE-A.I.P./A. CLNR			
B630-13-736	1				
13-736B		CLAMP,HOSE			
F249-13-736	1				
15-538		CLAMP,WATER HOSE			
JF02-15-538	6				
42-307		CAP			
0223-42-307	1	(MT)			

1400 -1 M OIL PUMP & FILTER

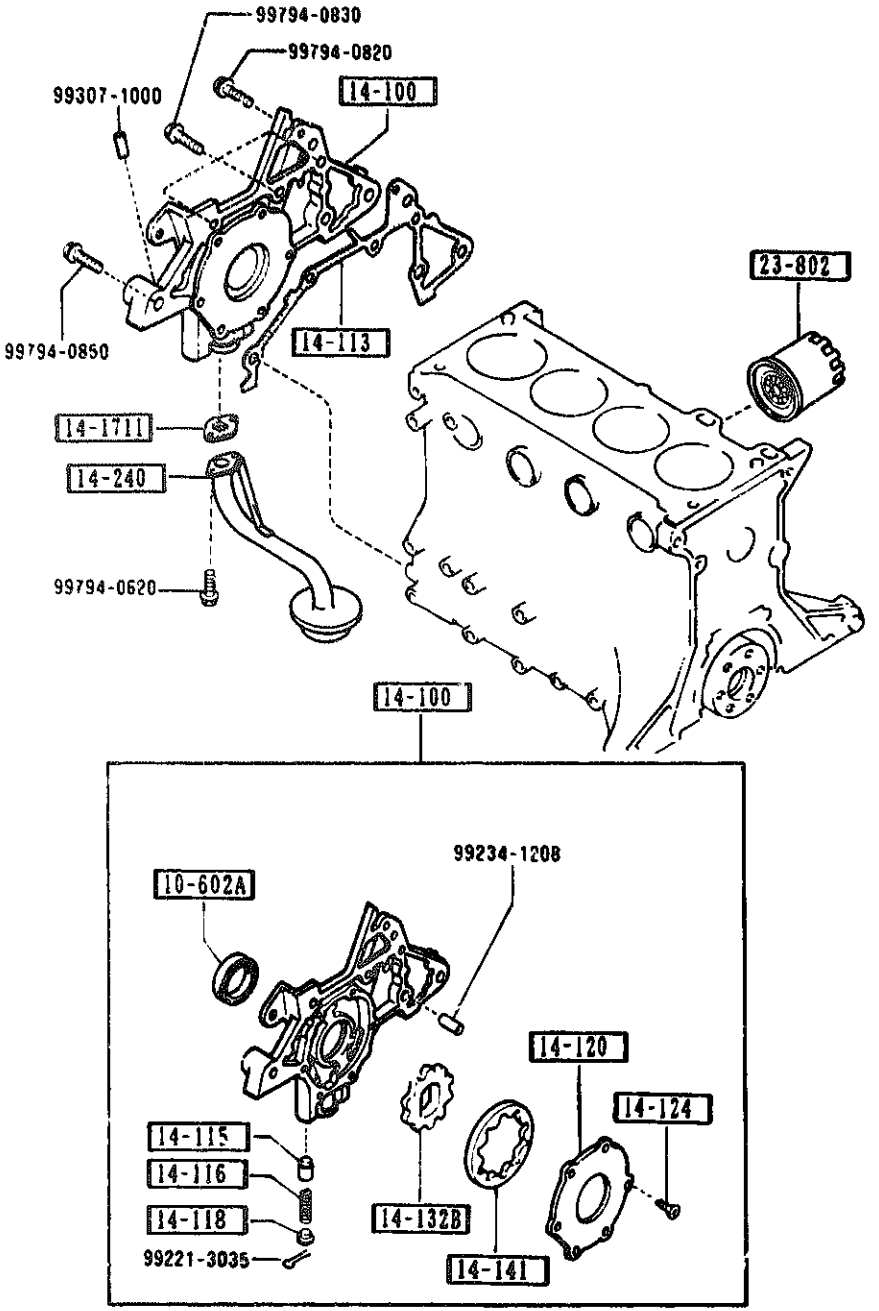

PART NO.	QTY	MODEL/RESTRICTION	MODEL/RESTRICTION	MODEL/RESTRICTION	FROM-TO
10-602A B630-10-602	1	SEAL,OIL			
14-100 B660-14-100E	1	PUMP,OIL			
14-113 B630-14-113	1	GASKET,OIL PUMP ASBESTOS			
14-115 0221-14-115	1	PLUNGER,CONTROL			
14-116 0324-14-116A	1	SPRING,PRESSURE			
14-118 0222-14-118	1	SHEET,SPRING			
14-120 B630-14-121	1	COVER,OIL PUMP			
14-124 FE1H-14-124	6	SCREW,OIL PUMP COVER			
14-132B B660-14-132	1	GEAR,INNER			
14-141 B660-14-141	1	GEAR,OUTER			
14-1711 0810-14-171A	1	GASKET,OIL STRAINER ASBESTOS			
14-240 B61P-14-240	1	STRAINER,OIL			
23-802 B6Y1-14-302	1	CARTRIDGE,OIL FILTER			

SECTION NAME INDEX (ENGINE)

LO.NO	SEC.NO	SECTION NAME	LO.NO	SEC.NO	SECTION NAME	LO.NO	SEC.NO	SECTION NAME
1-C03	1000	SHORT ENGINE & GASKET SETS						
1-D03	1010	CYLINDER HEAD & COVER						
1-G03	1030	CYLINDER BLOCK						
1-I03	1040	OIL PAN & TIMING COVER						
1-K03	1100	PISTON,CRANKSHAFT & FLYWHEEL						
1-N03	1200	VALVE SYSTEM						
1-D04	1300	INLET MANIFOLD						
1-E04	1310	EXHAUST MANIFOLD						
1-F04	1320	FUEL SYSTEM						
1-H04	1325	FUEL DISTRIBUTOR						
1-I04	1330	AIR CLEANER						
1-K04	1364	THROTTLE BODY						
1-L04	1370	EMISSION CONTROL SYSTEM (INLET SIDE)						
1-M04	1399	CAP & HOSE CLIP (INLET & EXHAUST SIDE)						
1-N04	1400	OIL PUMP & FILTER						
1-C05	1500	COOLING SYSTEM						
1-G05	1580	BRACKET,PULLEY & BELT						
1-C06	1600	CLUTCH DISC & COVER (MANUAL)						
1-D06	1700	TRANSMISSION CASE (MANUAL)						
1-E06	1710	TRANSMISSION GEARS(MANUAL)						
1-J06	1720	CHANGE CONTROL SYSTEM (MANUAL)						
1-M06	1800	ENGINE ELECTRICAL SYSTEM						
1-C07	1830	ALTERNATOR						
1-E07	1840	STARTER						
1-G07	1850	BATTERY						
1-H07	1910	TORQUE CONVERTER,OIL PUMP & PIPINGS (AUTOMATIC)						
1-K07	1920	TRANSMISSION CASE & MAIN CONTROL SYSTEM (AUTOMATIC)						
1-E08	1925	CONTROL VALVE (AUTOMATIC)						
1-I08	1930	CLUTCHES & PLANETARY GEARS (AUTOMATIC)						
1-D09	1940	GOVERNOR, LOW & REVERSE PISTON (AUTOMATIC)						
1-G09	1950	MANUAL LINKAGE SYSTEM (AUTOMATIC)						
1-I09	1960	GASKET & SEAL KIT (AUTOMATIC)						



CATLOG-NO= AUNA01-07

DATE. 1992-02

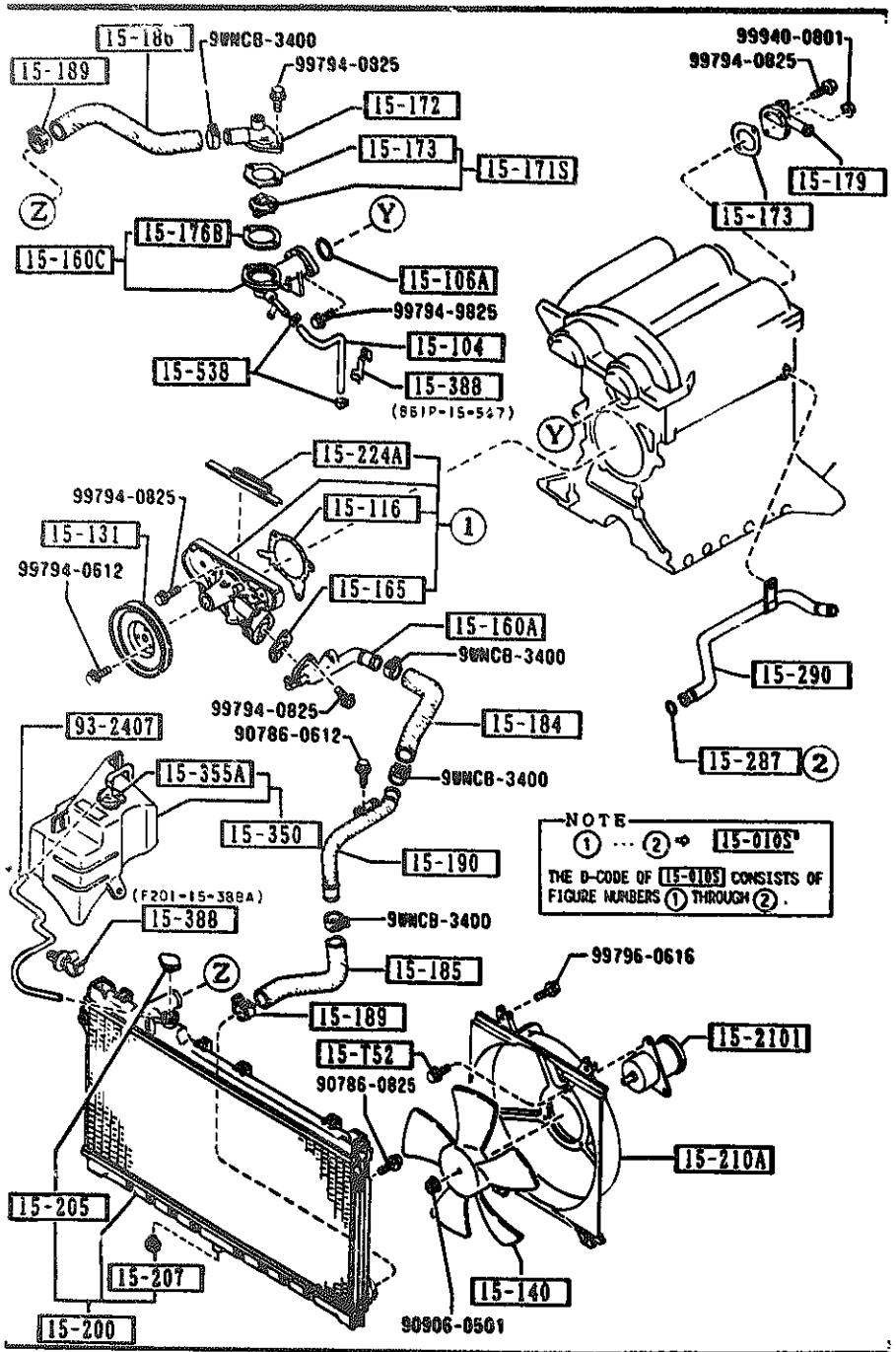

AUNA01

PART NO.	QTY	MODEL/RESTRICTION	MODEL/RESTRICTION	MODEL/RESTRICTION	FROM TO
15-T52		SCREW,MOTOR-ELECTRIC FAN			
B6S8-15-T52	3				
15-010S		PUMP SET,WATER			
8AB8-15-010	1	NON ASBESTOS			
15-104		HOSE,WATER BY-PASS			
B61P-15-261A	1				
15-106A		RING,'O'-WATER PUMP			
B61P-15-106	1				
15-116		GASKET,WATER PUMP			
B621-15-116A	1	NON ASBESTOS			
15-131		PULLEY,WATER PUMP			
B366-15-131	1				-9901
AN(B366-15-131A)					
B366-15-131A	1				9901-
15-140		FAN,COOLING			
B6S8-15-140A	1	CALSONIC (AT)			
B61P-15-140	1	(MT)			
15-160A		INLET,WATER PUMP			
B61P-15-160	1				
15-160C		PIPE,WATER PUMP			
B61P-15-170A	1				-9401
A (B61P-15-170B)					
B61P-15-170B	1				9401-
15-165		GASKET,W.PUMP INLET			
B621-15-165	1	NON ASBESTOS			
15-171S		THERMOSTAT SET			
8AN1-15-171	1	NON ASBESTOS			

9401 NA35##-100090
9901 NA35##-119257

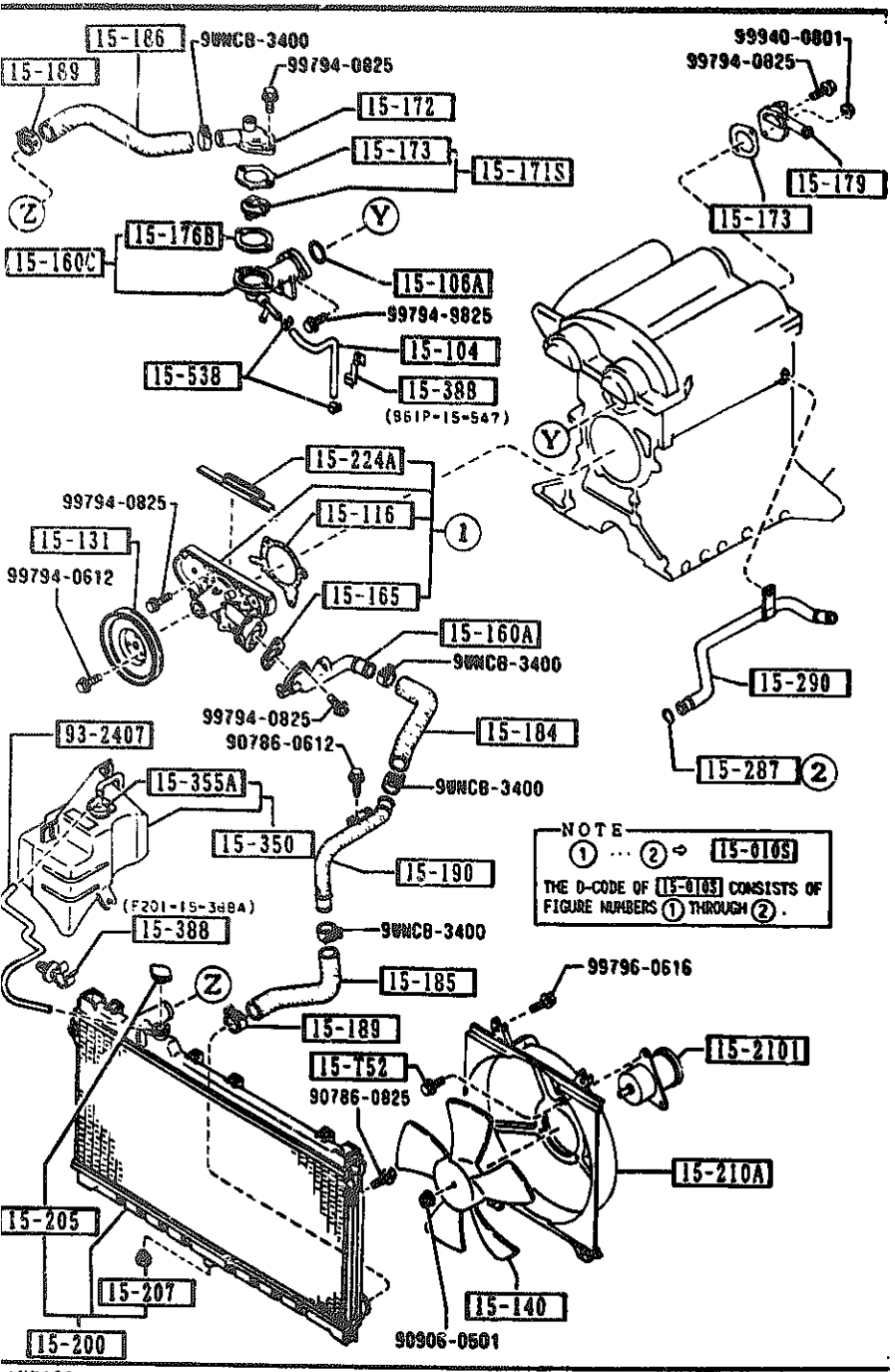

PART NO.	QTY	MODEL/RESTRICTION	MODEL/RESTRICTION	MODEL/RESTRICTION	FROM-TO
15-172		COVER,THERMOSTAT			
B61P-15-172	1				
15-173		GASKET,THERMOSTAT COVER			
B621-15-173	2	NON ASBESTOS			
15-176B		CASE,THERMOSTAT			
B61P-15-176A A (B61P-15-176B)	1				-9401
B61P-15-176B	1				9401-
15-179		OUTLET,WATER			
B61P-15-179 A (B61P-15-179A)	1				-9415
B61P-15-179A	1				9415-
15-184		HOSE,WATER			
B61P-15-184	1				
15-185		HOSE,WATER			
B61P-15-185	1				
15-186		HOSE,WATER			
B61P-15-186	1				
15-189		CLAMP,HOSE			
B366-15-182	2				
15-190		PIPE,WATER			
B61P-15-190	1				
15-200		RADIATOR			
B61P-15-200	1	CALSONIC (MT)			
B64J-15-200A	1	CALSONIC (AT)			
15-205		CAP,RADIATOR			
0316-15-205	1	CALSONIC			

9401 NA35##-100090
9415 NA35##-100712

1500 COOLING SYSTEM

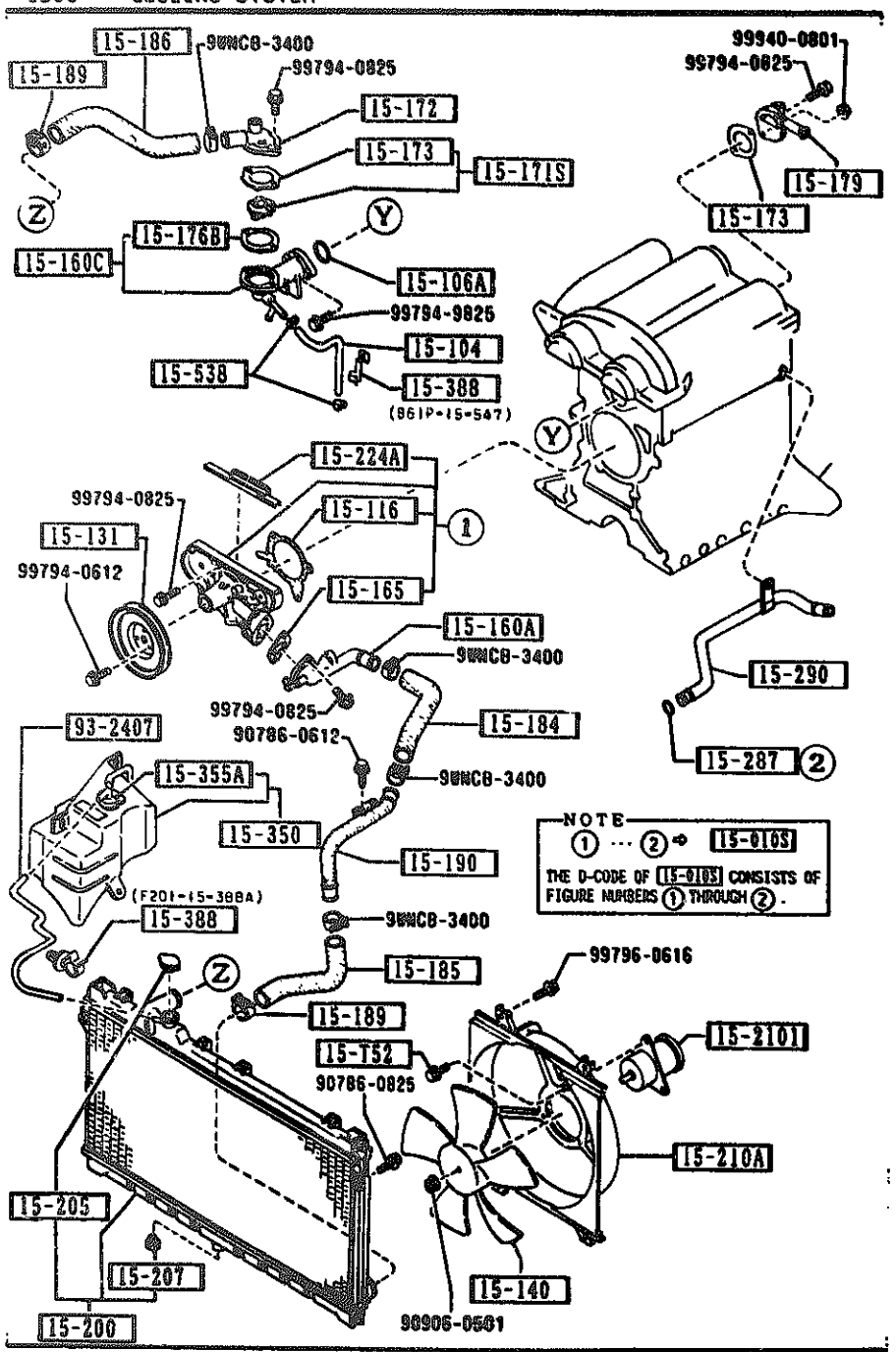

AUNA101

PART NO.	QTY	MODEL/RESTRICTION	MODEL/RESTRICTION	MODEL/RESTRICTION	FROM-TO
15-207		COCK,DRAIN			
N326-15-203	1				
15-210A		COWLING,RADIATOR			
B61P-15-210A	1				
15-2101		FAN DRIVE			
B61P-15-150A	1	(MT)			
B64J-15-150	1	(AT)			
15-224A		RUBBER,SEAL			
B660-10-543B	1				
15-287		RING,'O'-WATER BY-PASS			
E301-15-287	1				
15-290		PIPE,BY PASS			
B61P-15-290 AN(B61P-15-290A)	1				-9A01
B61P-15-290A AN(B61P-15-290B)	1				9A01-0301
B61P-15-290B	1				0301-
15-350		TANK,SUB-RADIATOR			
B61P-15-350A A (B61P-15-350B)	1				-9419
B61P-15-350B AN(B61P-15-350C)	1				9419-9901
B61P-15-350C	1				9901-
15-355A		CAP,SUB TANK			
B61P-15-355 AN(B61P-15-355A)	1				-9901
B61P-15-355A	1				9901-
15-388		CLIP,HOSE-SUB T.& WATER H			
B61P-15-547	1				
F201-15-388 A (F201-15-388A)	1				-9401
F201-15-388A	1				9401-

9401 NA35##-100090
9419 NA35##-101038
9901 NA35##-119257
9A01 NA35##-122908
0301 NA35##-141901

CAT. AUNAC1-07

1992-02

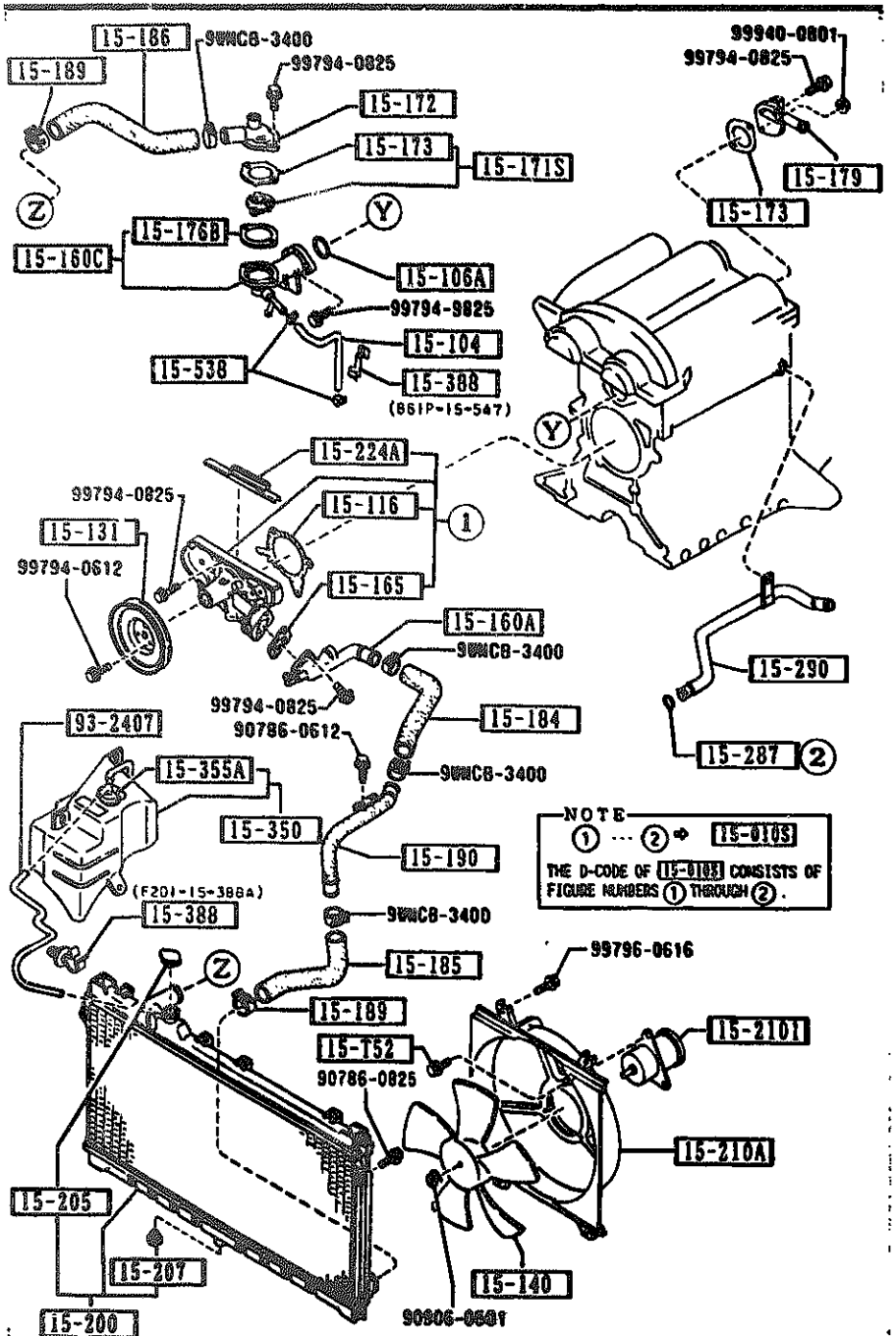

PART NO.	QTY	MODEL/RESTRICTION	MODEL/RESTRICTION	MODEL/RESTRICTION	FROM-TO
15-538		CLAMP,WATER HOSE			
JF02-15-538	2				
93-2407		HOSE,WATER			
99324-07630	1				-9419
99324-07610	1				9419-

9419 NA35MM-101038

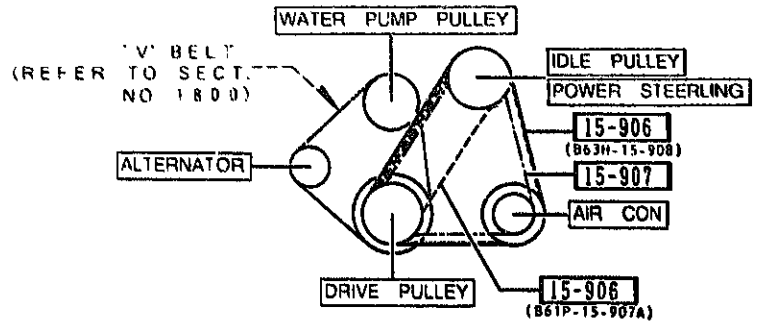

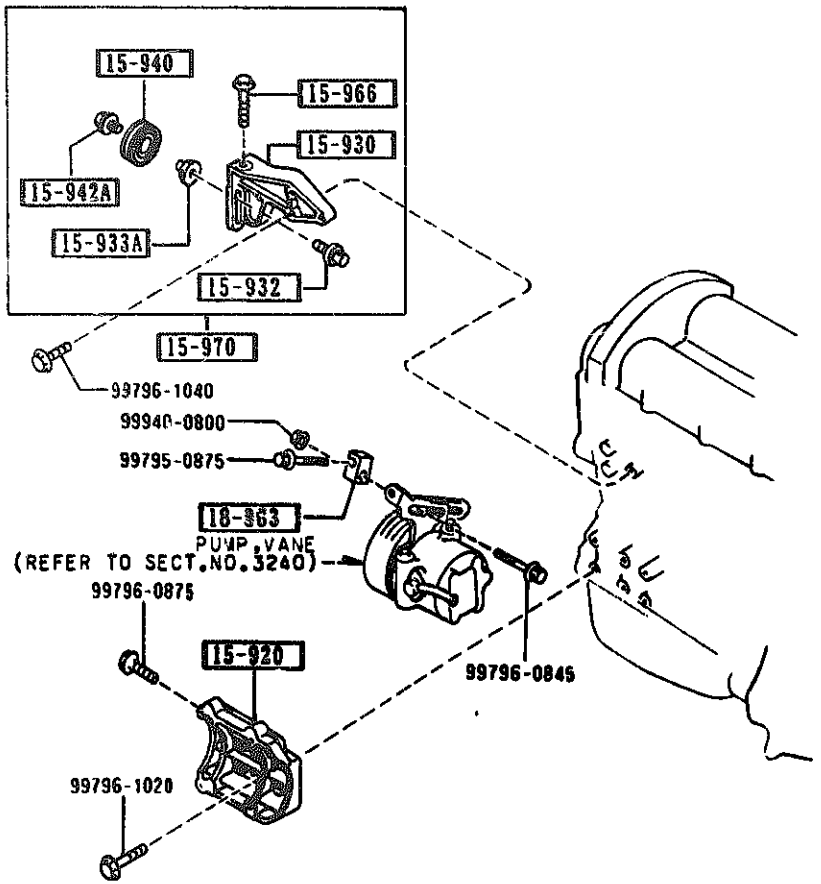

PART NO.	QTY	MODEL/RESTRICTION	MODEL/RESTRICTION	MODEL/RESTRICTION	FROM-TO
15-906		BELT'V'			
B63H-15-908	1	L=955 4PK RIB.V			
B61P-15-907 AN(B61P-15-907A)	1	L=865 4PK RIB.BELT			-9626
B61P-15-907A	1	L=855 4PK RIB.BELT (W/P.S.)			9626-
15-907		BELT'V'			
B63H-15-909	1	L=855 4PK RIB.V			
15-920		BRACKET,COMPRESSOR			
B61P-15-810A	1	(A)			
15-930		BRACKET,IDLE PULLEY			
BP01-15-951	1	(A)			
15-932		SHAFT,PULLEY			
B631-15-932	1	(A)			
15-933A		COLLAR			
BP01-15-933	1	(A)			
15-940		PULLEY,IDLE			
BP01-15-940	1	(A)			
15-942A		COLLAR			
E564-15-962	1	(A)			
15-966		BOLT,ADJUST			
E564-15-934	1	(A)			
15-970		PULLEY,IDLE			
BP01-15-930	1	(A)			
18-363		SPACER,STRAP			

9626 NA35MM-111021

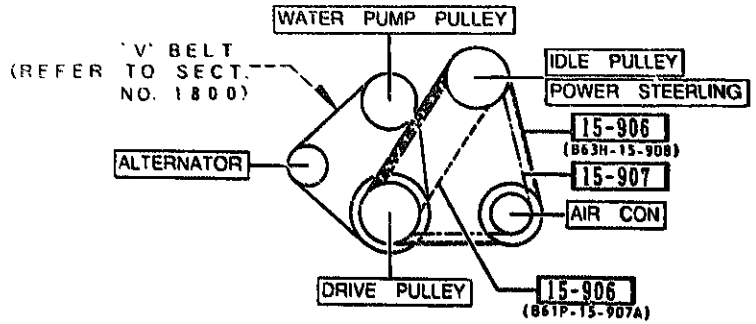

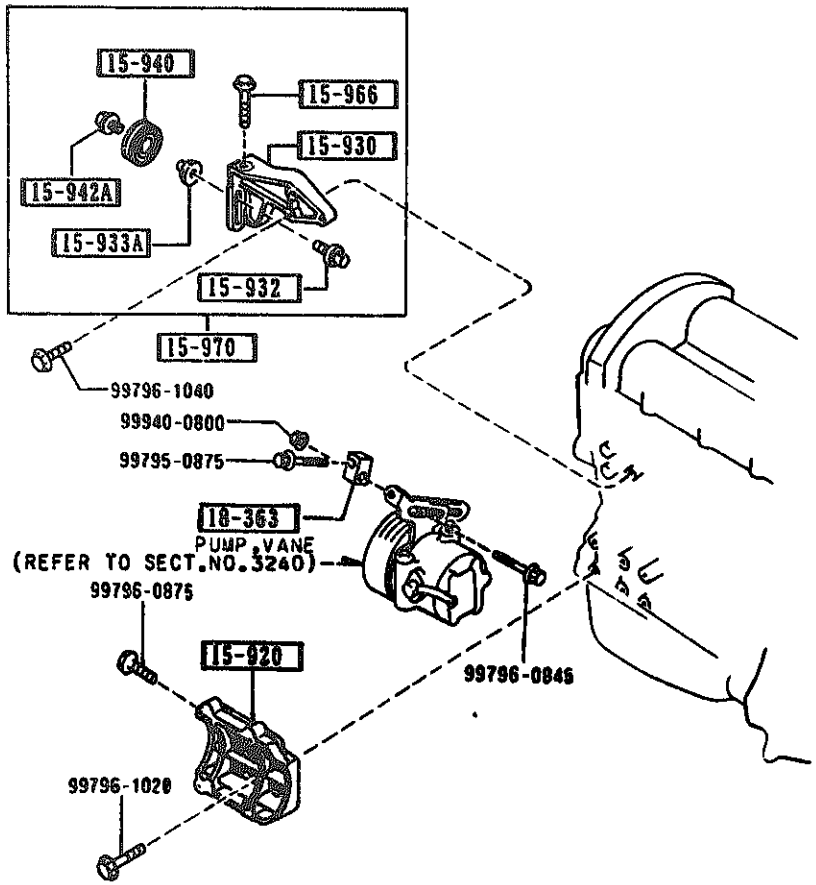

PART NO.	QTY	MODEL/RESTRICTION	MODEL/RESTRICTION	MODEL/RESTRICTION	FROM-TO
CONT'D F201-18-363	1	(W/P.S.)			

SECTION NAME INDEX (ENGINE)

LO.NO	SEC.NO	SECTION NAME	LO.NO	SEC.NO	SECTION NAME	LO.NO	SEC.NO	SECTION NAME
1-C03	1000	SHORT ENGINE & GASKET SETS						
1-D03	1010	CYLINDER HEAD & COVER						
1-G03	1030	CYLINDER BLOCK						
1-I03	1040	OIL PAN & TIMING COVER						
1-K03	1100	PISTON,CRANKSHAFT & FLYWHEEL						
1-N03	1200	VALVE SYSTEM						
1-D04	1300	INLET MANIFOLD						
1-E04	1310	EXHAUST MANIFOLD						
1-F04	1320	FUEL SYSTEM						
1-H04	1325	FUEL DISTRIBUTOR						
1-I04	1330	AIR CLEANER						
1-K04	1364	THROTTLE BODY						
1-L04	1370	EMISSION CONTROL SYSTEM (INLET SIDE)						
1-M04	1399	CAP & HOSE CLIP (INLET & EXHAUST SIDE)						
1-N04	1400	OIL PUMP & FILTER						
1-C05	1500	COOLING SYSTEM						
1-G05	1580	BRACKET,PULLEY & BELT						
1-C06	1600	CLUTCH DISC & COVER (MANUAL)						
1-D06	1700	TRANSMISSION CASE (MANUAL)						
1-E06	1710	TRANSMISSION GEARS(MANUAL)						
1-J06	1720	CHANGE CONTROL SYSTEM (MANUAL)						
1-M06	1800	ENGINE ELECTRICAL SYSTEM						
1-C07	1830	ALTERNATOR						
1-E07	1840	STARTER						
1-G07	1850	BATTERY						
1-H07	1910	TORQUE CONVERTER,OIL PUMP & PIPINGS (AUTOMATIC)						
1-K07	1920	TRANSMISSION CASE & MAIN CONTROL SYSTEM (AUTOMATIC)						
1-E08	1925	CONTROL VALVE (AUTOMATIC)						
1-I08	1930	CLUTCHES & PLANETARY GEARS (AUTOMATIC)						
1-D09	1940	GOVERNOR, LOW & REVERSE PISTON (AUTOMATIC)						
1-G09	1950	MANUAL LINKAGE SYSTEM (AUTOMATIC)						
1-I09	1960	GASKET & SEAL KIT (AUTOMATIC)						

CATLOG-NO= AUNA01-07

DATE. 1992-02

1600 -1 * CLUTCH DISC & COVER (MANUAL)

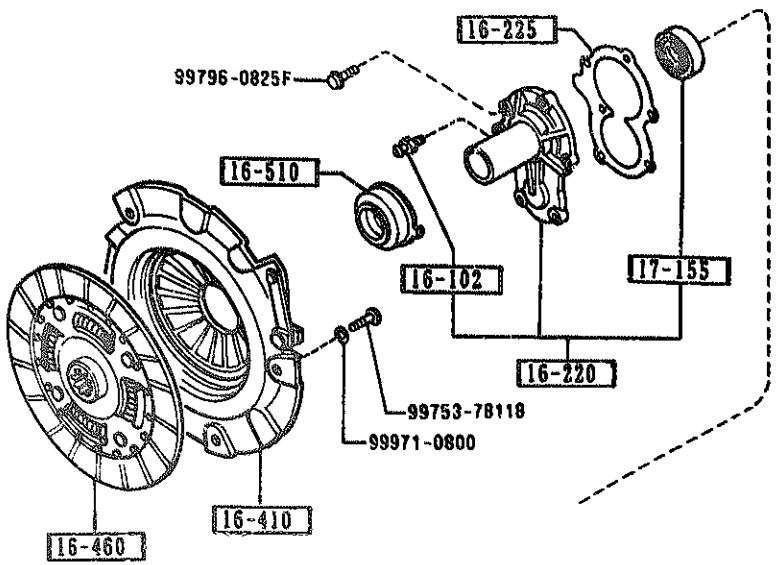

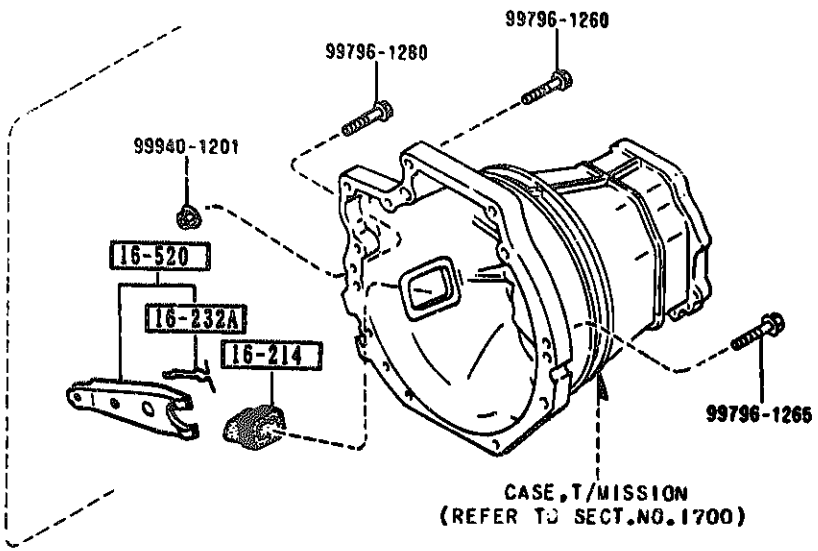

PART NO.	QTY	MODEL/RESTRICTION	MODEL/RESTRICTION	MODEL/RESTRICTION	FROM TO
16-102		PIN,PIVOT-CLUTCH REL .FORK			
0603-16-102B	1				
16-214		COVER,DUST-CLUTCH FO RK			
FE86-16-214	1				
16-220		COVER,FRONT CLUTCH			
B622-16-220	1				
16-225		GASKET,FRONT COVER			
FE50-16-225A	1				
16-232A		SUPPORTER,FORK			
1416-16-232A	1				
16-410		COVER,CLUTCH			
B622-16-410	1				
16-460		DISC,CLUTCH			
B622-16-460 A (B622-16-460A)	1	ASBESTOS			-9330
B622-16-460A	1	ASBESTOS			9330-
16-510		COLLAR,CLUTCH REL.			
B622-16-510	1				
16-520		FORK,CLUTCH RELEASE			
B622-16-520	1				
17-155		SEAL,OIL			
N501-17-103	1				

9330 NA35##-100072

1700 TRANSMISSION CASE (MANUAL)

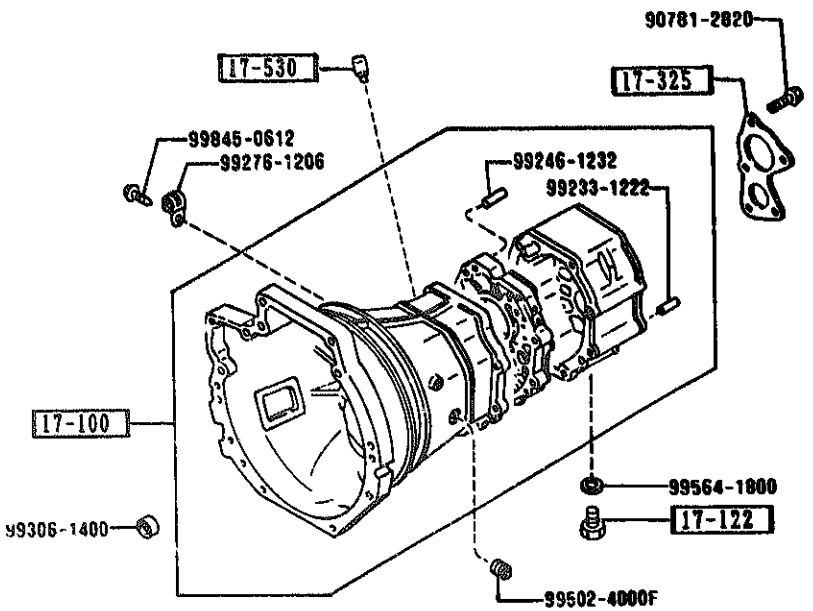

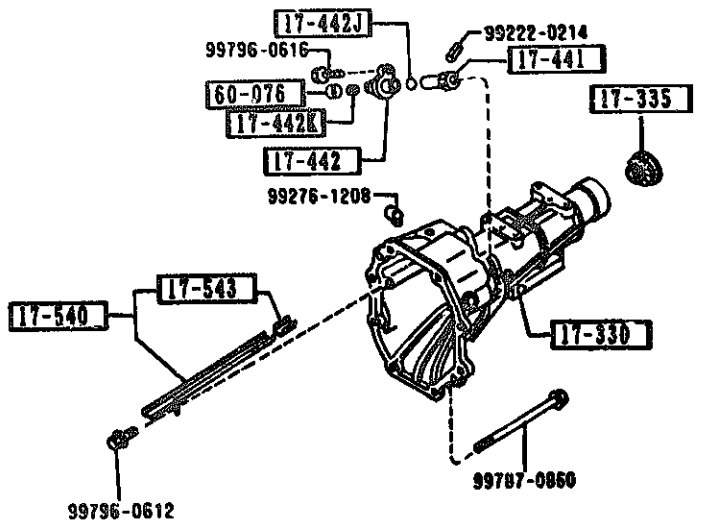

PART NO.	QTY	MODEL/RESTRICTION	MODEL/RESTRICTION	MODEL/RESTRICTION	FROM-TO
17-100		CASE,T/MISSION			
M526-17-100	1				
17-122		PLUG,MAGNET			
0810-17-121	1				
17-325		COVER,BEARING			
8086-17-326	1				
17-330		HOUSING,EXTENSION			
M5Y1-17-330	1				
17-335		SEAL,OIL			
M507-17-335	1				
17-441		GEAR,DRIVEN			
1472-17-441A	1	N=23			
17-442		SLEEVE,SPEEDOMETER			
1669-17-442B	1				
17-442J		RING,'O'			
1011-17-443	1				
17-442K		SEAL,OIL			
99586-08166	1				
17-530		BREATHER,AIR-T/MISSION			
0884-17-530	1				
17-540		PASS,OIL			
M509-17-540	1				
17-543		RUBBER,SEAL			
M501-17-543A	1				
60-076		GASKET,GUIDE SEAL-SPEEDO.			
8092-60-076A	1				

1710 -1 TRANSMISSION GEARS(MANUAL)

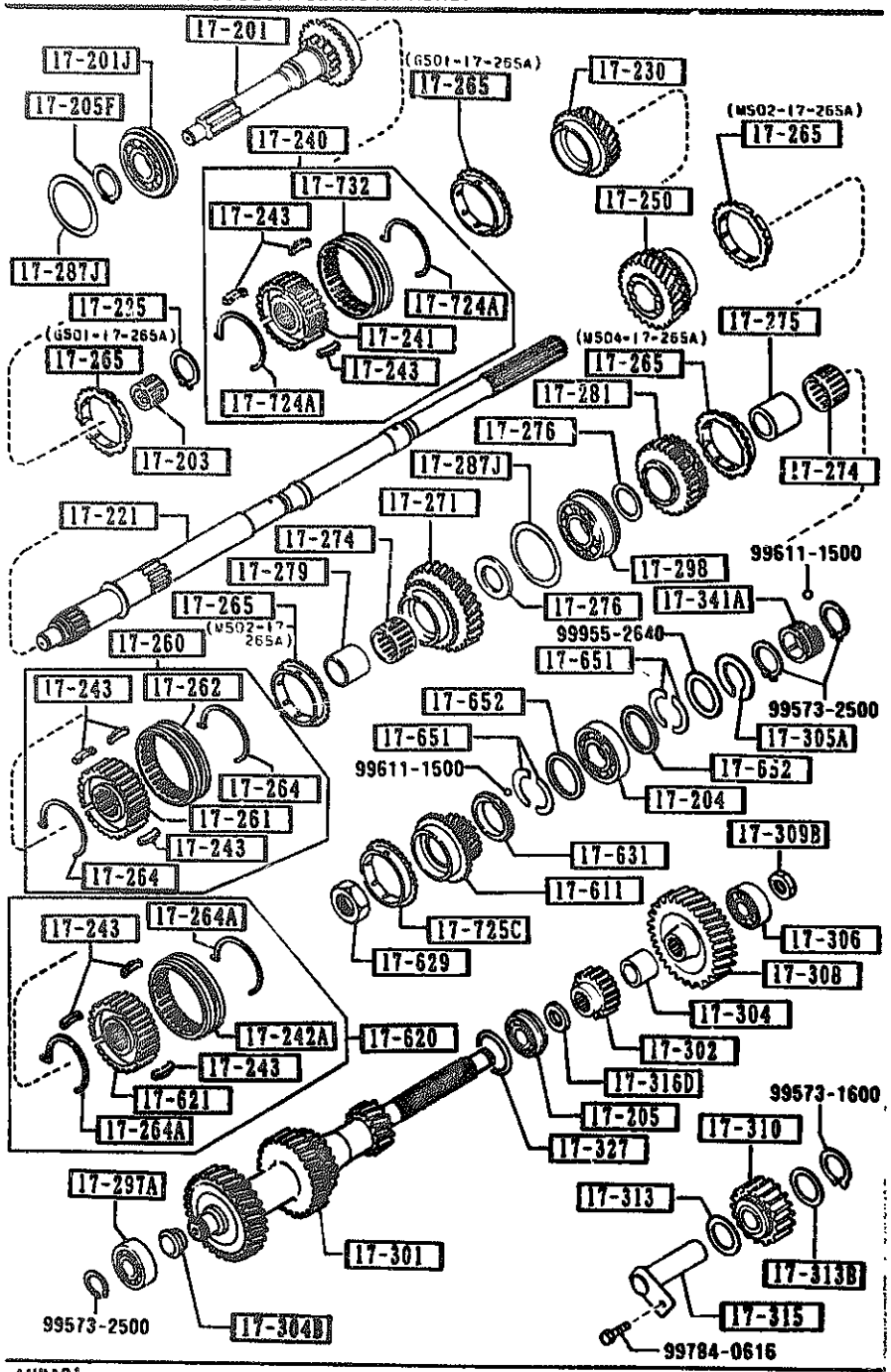

PART NO.	QTY	MODEL/RESTRICTION	MODEL/RESTRICTION	MODEL/RESTRICTION	FROM-TO
17-201 M516-17-201	1	GEAR,MAIN DRIVE			
17-201J M502-17-295C	1	BEARING,BALL-MAIN DRIVE GEAR			
17-203 M501-17-210	1	BEARING,NEEDLE			
17-204 M503-17-204	1	BEARING,BALL-MAIN SHAFT			
17-205 R502-17-306A	1	BEARING,ROLLER			
17-205F M501-17-205	1	RING,RETAINING			
17-221 M505-17-221B	1	SHAFT,MAIN			
17-225 0317-17-225	1	RING,SNAP			
17-230 M513-17-231	1	GEAR,3RD			
17-240 M502-17-240B A (M502-17-240C)	1	HUB SET,CLUTCH-3RD & 4TH			-9701
M502-17-240C	1				9701-
17-241 M501-17-241B	1	HUB,CLUTCH			
17-242A F401-17-242A	1	SLEEVE,CLUTCH HUB			
17-243 F401-17-243A	9	KEY,SYNCHRONIZER			

9701 NA35*M-111969

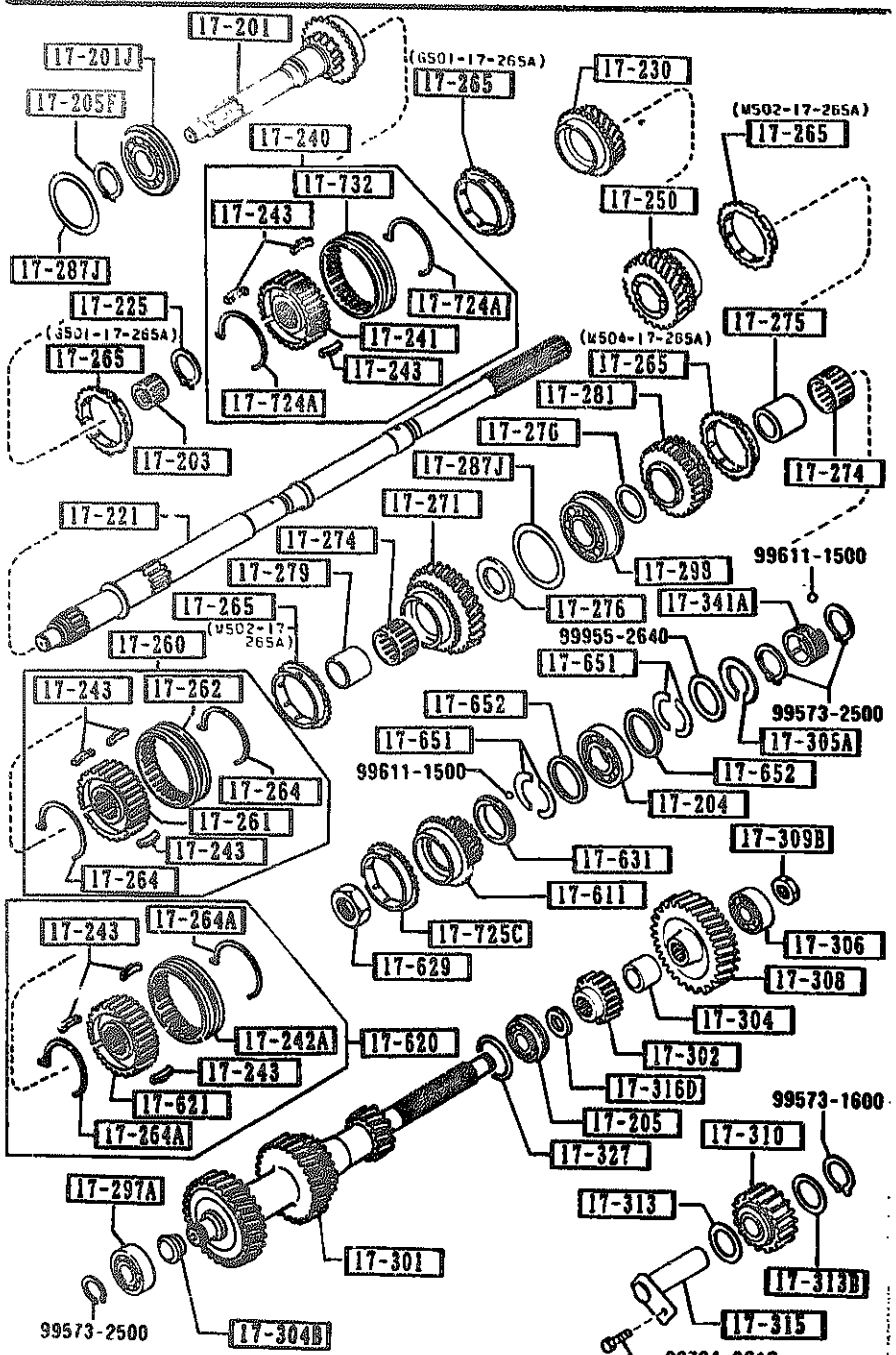

PART NO.	QTY	MODEL/RESTRICTION	MODEL/RESTRICTION	MODEL/RESTRICTION	FROM TO
17-250		GEAR,2ND			
M515-17-251	1				
17-260		HUB SET,CLUTCH-1ST & 2ND			
M505-17-269A	1				
17-261		HUB,CLUTCH			
M502-17-261	1				
17-262		SLEEVE,CLUTCH HUB			
M503-17-262	1				
17-264		SPRING,SYNCHRO. KEY			
G401-17-264	2				
17-264A		SPRING,SYNCRONIZER			
F401-17-264A	2				
17-265		RING,SYNCHRONIZER			
G501-17-265A	2				
M502-17-265A	2				
M504-17-265 A (M504-17-265A)	1				-0101
M504-17-265A	1				0101-
17-271		GEAR,1ST			
M516-17-271	1				
17-274		BEARING,NEEDLE			
4069-17-283A	2				
17-275		RACE,INNER			
4069-17-284E	1				
17-276		WASHER,THRUST			
0259-17-274A	2	T=3MM			
0259-17-276	2	T=2.2MM			
0259-17-277	2	T=2.7MM			

0101 NA35##-133591

1710 -3 TRANSMISSION GEARS(MANUAL)

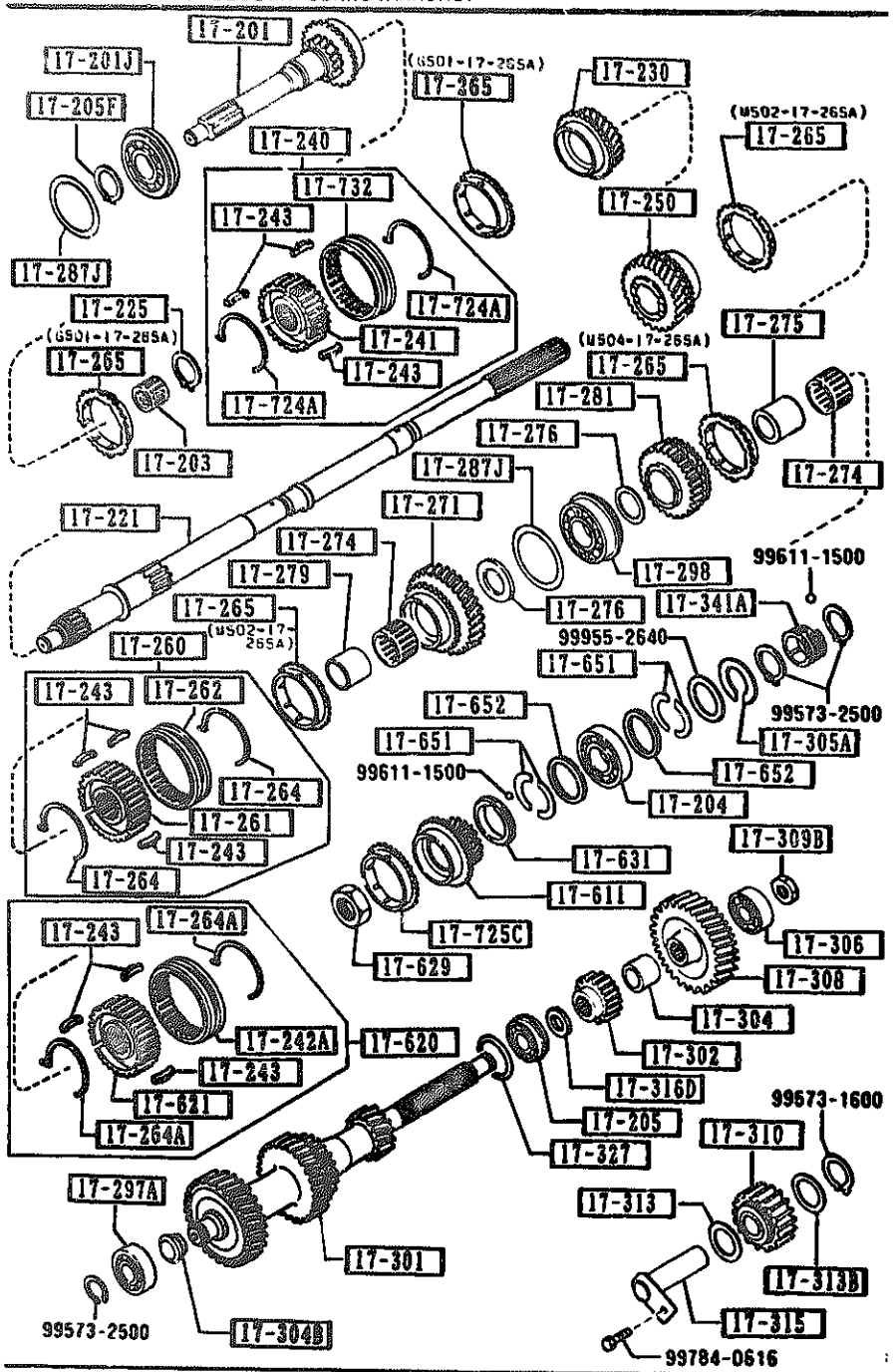

PART NO.	QTY	MODEL/RESTRICTION	MODEL/RESTRICTION	MODEL/RESTRICTION	FROM TO
CONT'D					
0259-17-278	2	T=3.2MM			
0259-17-279	2	T=3.7MM			
17-279		SLEEVE,GEAR			
8540-17-275A	1				
17-281		GEAR,REVERSE			
M509-17-281 A (M509-17-281A)	1				-9801
M509-17-281A	1				9801-
17-287J		SHIM,ADJUST			
99963-6310	2	T=0.1MM			
99963-6315	1	T=0.15MM			
99963-6330	2	T=0.3MM			
17-297A		BEARING,BALL-COUNTER SHAFT G.			
M502-17-297A	1				
17-298		BEARING			
M502-17-298A	1				
17-301		GEAR,COUNTER SHAFT			
M528-17-301	1				
17-302		GEAR,COUNTER REVERSE			
M512-17-302 A (M512-17-302A)	1				-9801
M512-17-302A	1				9801-
17-304		SPACER			
M504-17-304	1				
17-304B		SPACER			
M501-17-304B	1				
17-305A		RING,RETAINING-BALL BEARING			
0839-17-305B	1				

9801 MA35**-116316

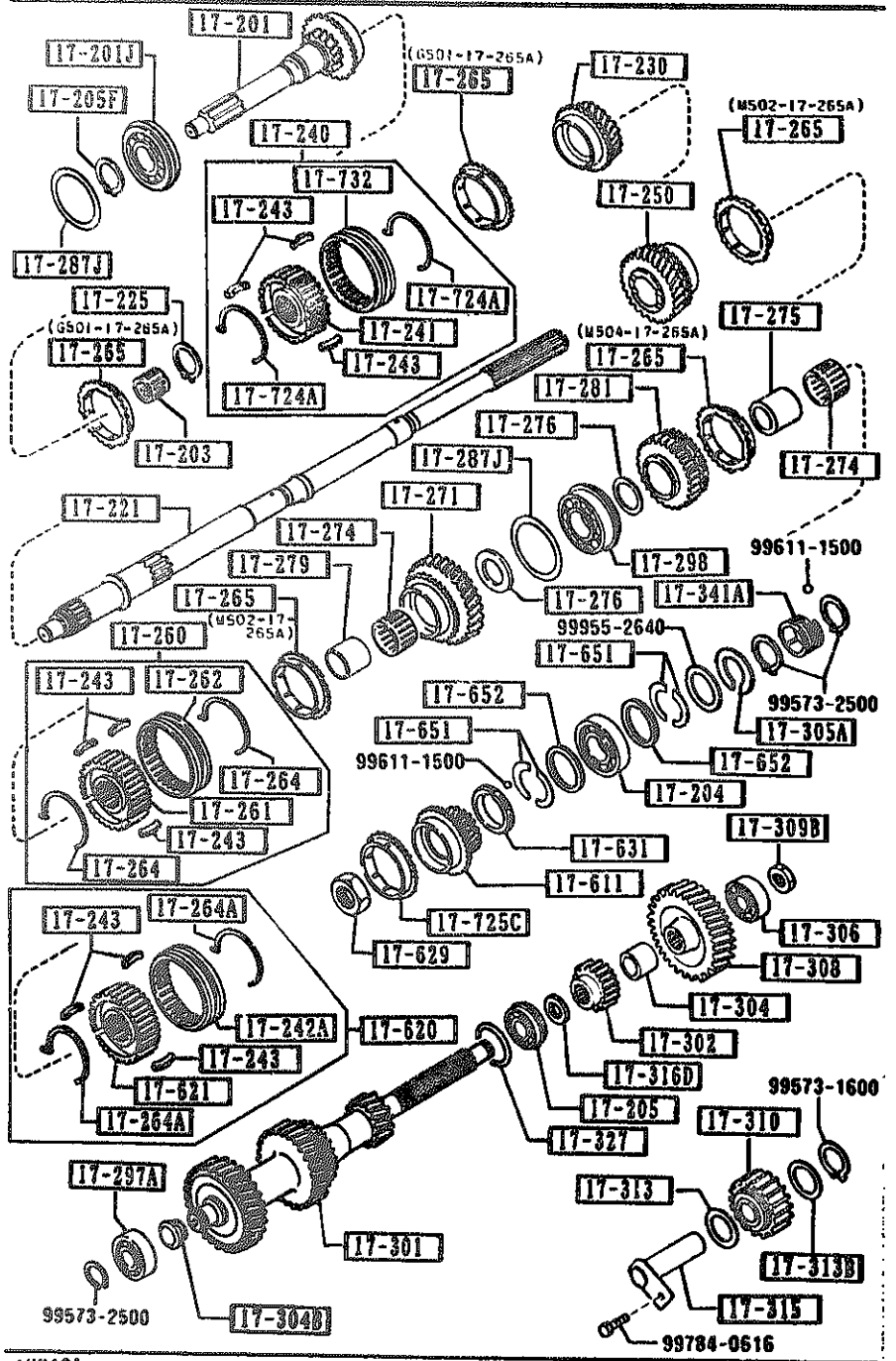

PART NO.	QTY	MODEL/RESTRICTION	MODEL/RESTRICTION	MODEL/RESTRICTION	FROM-TO
17-306		BEARING,BALL			
M502-17-299A	1				
17-308		GEAR,COUNTER			
M510-17-308	1				
17-309B		NUT,LOCK-COUNTER SHAFT BR			
M501-17-309	1				
17-310		GEAR,REVERSE IDLE			
M509-17-310 A (M509-17-310A)	1				-9801
M509-17-310A	1				9801-
17-313		WASHER,THRUST-REVERSE IDLE G.			
M501-17-313	1				
17-313B		WASHER,THRUST			
4077-17-314A	1	T=2.8MM			
4077-17-315A	1	T=3MM			
4077-17-316	1	T=2.6MM			
17-315		SHAFT,REV. IDLE GEAR			
8086-17-140A	1				
17-316D		SPACER			
R502-17-316	1				
17-327		SHIM,ADJUST-COUNTER SHAFT GEAR			
0305-17-327	2	T=0.1MM			
0305-17-328	1	T=0.3MM			
17-341A		GEAR,SPEEDO.DRIVE			
M503-17-341	1				
17-611		GEAR,OVER TOP			
M517-17-611	1				

9801 NA35MM-116316

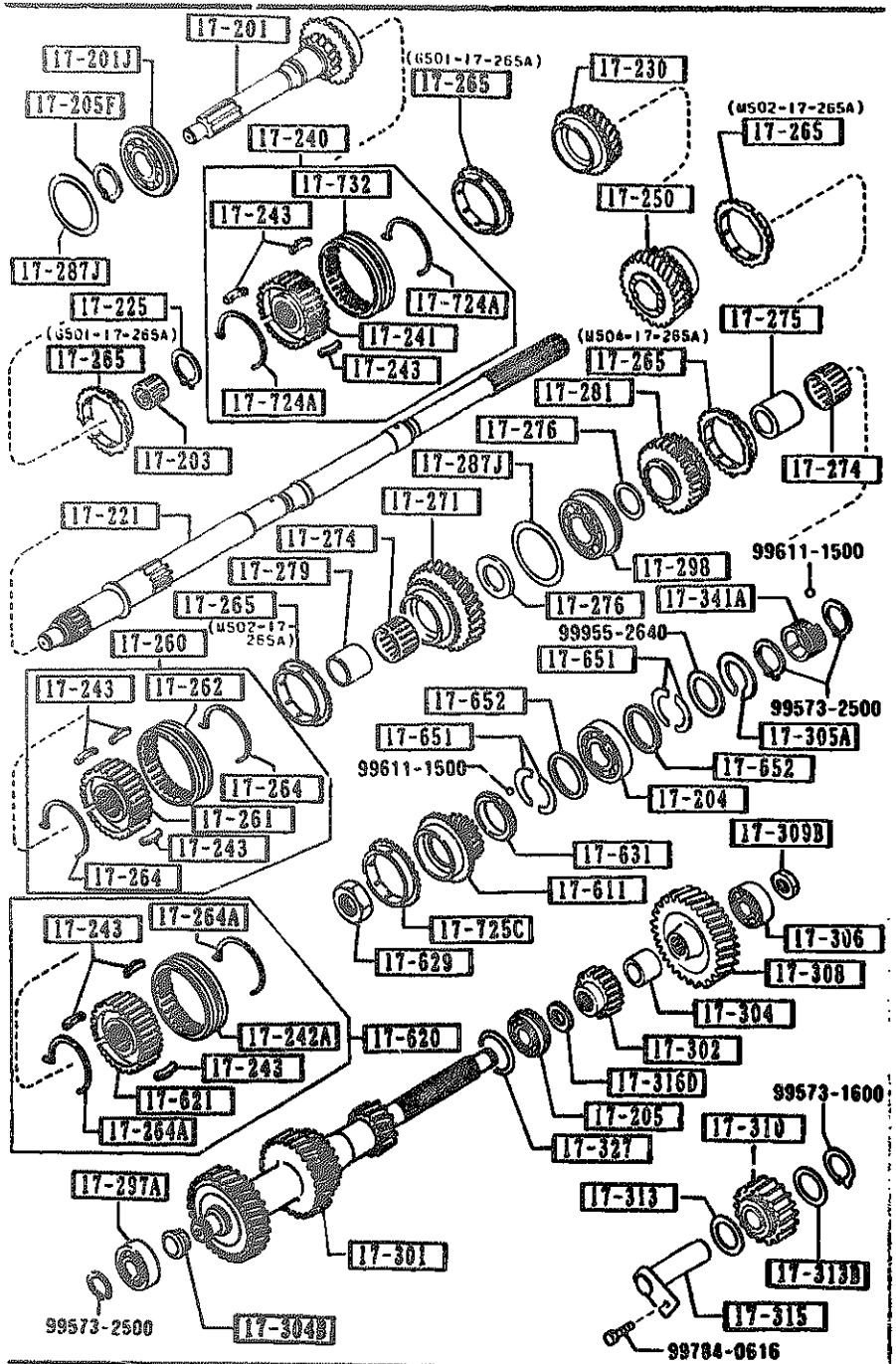

PART NO.	QTY	MODEL/RESTRICTION	MODEL/RESTRICTION	MODEL/RESTRICTION	FROM-TO
17-620		HUB SET,CLUTCH-O.T. & REV			
M505-17-620	1				
17-621		HUB,CLUTCH			
M505-17-621	1				
17-629		NUT,LOCK-CLUTCH HUB			
8601-17-629	1				
17-631		WASHER,THRUST LOCK-D VER TOP G.			
0884-17-632B	1	T=6.2MM			
0884-17-633B	1	T=6.4MM			
0884-17-634B	1	T=6.5MM			
0884-17-635B	1	T=6.6MM			
17-651		WASHER,THRUST			
M501-17-651	4	T=3MM			
M501-17-653	2	T=3.1MM			
M501-17-654	2	T=3.2MM			
M501-17-655	2	T=2.9MM			
17-652		RING,THRUST WASHER			
M501-17-652	2	T=2MM			
17-724A		SPRING,SYNCHRD.KEY			
W501-17-724	2				
17-725C		RING,SYNCHRONIZER			
V501-17-725	1				
17-732		SLEEVE,CLUTCH HUB			
W501-17-732A	1				-9701
A (W501-17-732B)					
W501-17-732B	1				9701-

9701 NA35MM-111969

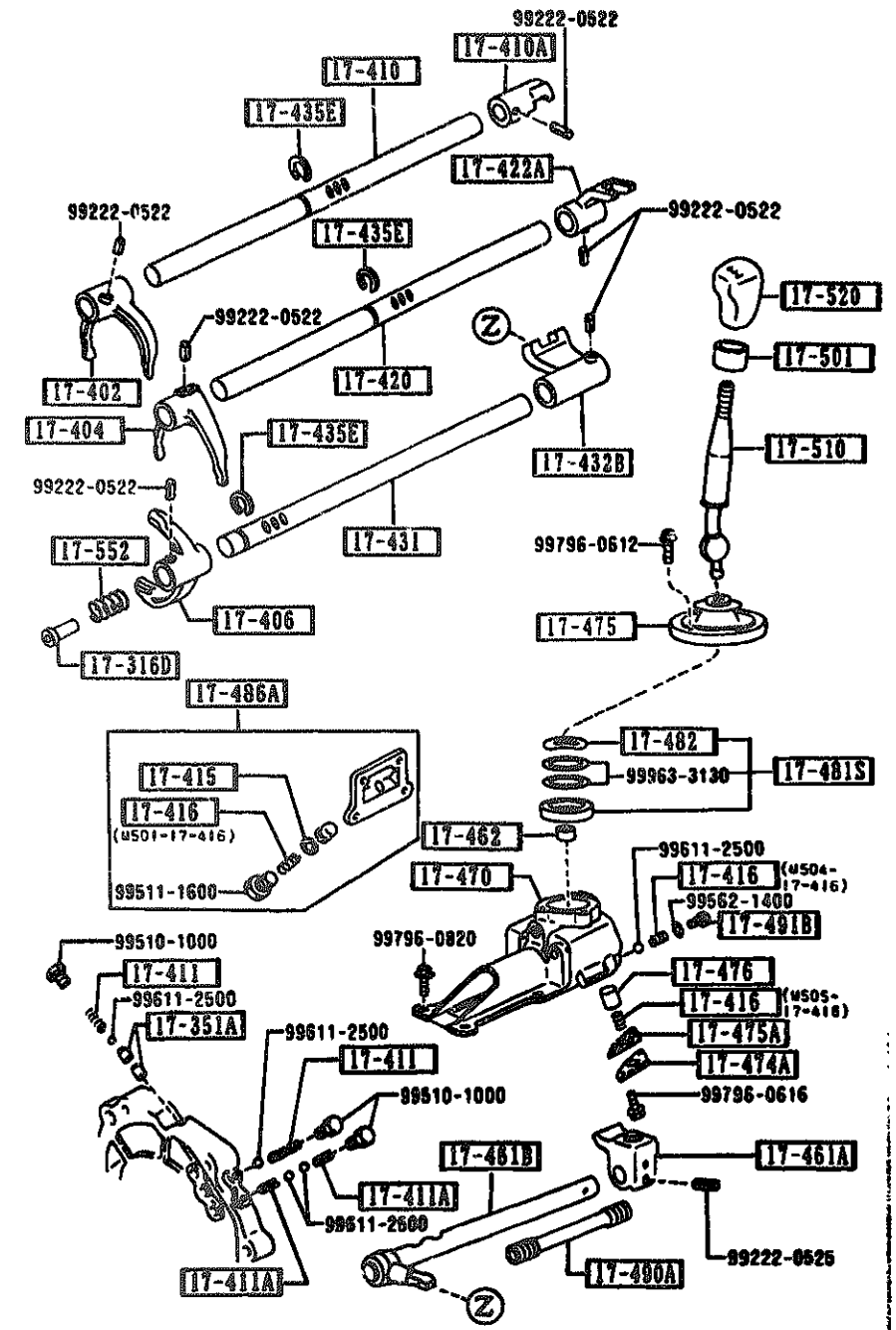

1720 -1 CHANGE CONTROL SYSTEM (MANUAL)

PART NO.	QTY	MODEL/RESTRICTION	MODEL/RESTRICTION	MODEL/RESTRICTION	FROM-TO
17-316D M504-17-316	1	SPACER			
17-351A 0114-17-351	2	PIN,INTER LOCK			
17-402 M503-17-402	1	FORK,SHIFT(1ST&2ND)			
17-404 M501-17-404B	1	FORK,SHIFT(3RD&4TH)			
17-406 M504-17-406A	1	FORK,SHIFT			
17-410 M503-17-411	1	ROD,SHIFT(1ST&2ND)			
17-410A M507-17-412	1	END,S/ROD(1ST&2ND)			
17-411 0103-17-411	2	SPRING,SHIFT ROD 5TH & REVERSE			
17-411A 0014-17-411	2	SPRING,SHIFT ROD-REVERSE			
17-415 3648-17-415	1	RING,RETAINING-SHIFT ROD END			
17-416 M501-17-416	1	SPRING,SHIFT ROD END			
M504-17-416	1				
M505-17-416	1				
17-420 M503-17-421	1	ROD,SHIFT(3RD&4TH)			
17-422A M507-17-422	1	END,S/ROD(3RD&4TH)			

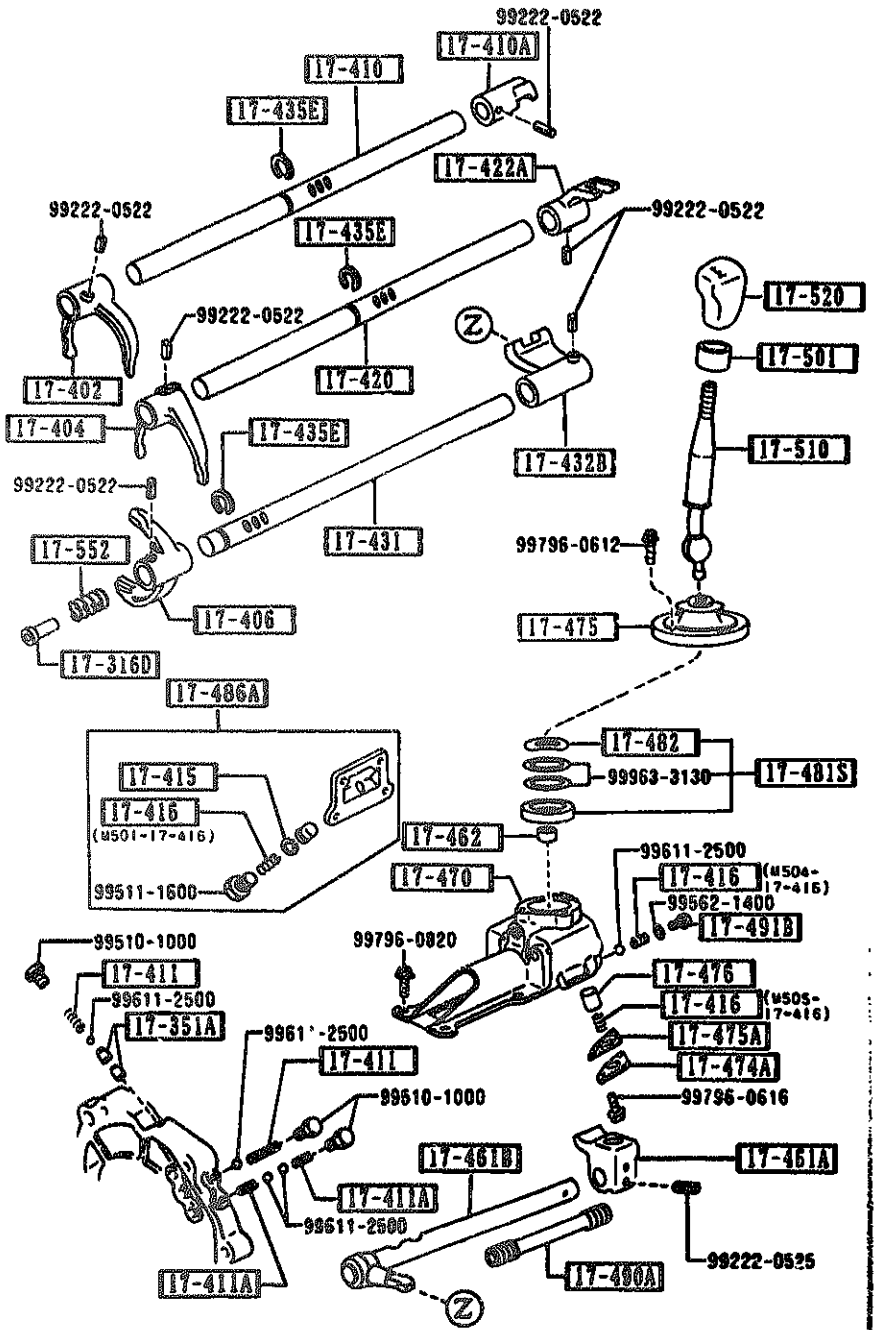

PART NO.	QTY	MODEL/RESTRICTION	MODEL/RESTRICTION	MODEL/RESTRICTION	FROM-TO
17-431		ROD,SHIFT-OVER TOP & REVERSE			
M506-17-431 A (M506-17-431A)	1				-0316
M506-17-431A	1				0316-
17-432B		END,SHIFT ROD(O/TOP& REV.)			
M508-17-432	1				
17-435E		RING,RETAINING			
R502-17-435	3				
17-461A		END,CONTROL LEVER			
M508-17-461	1				
17-461B		ROD,CONTROL			
M516-17-450	1				
17-462		SHEET,SPRING			
0398-17-462A	1				
17-470		CASE,CHANGE CONTROL			
M510-17-470B A (M510-17-470C)	1				-0116
M510-17-470C	1				0116-
17-474A		CAP,SPRING			
M501-17-474	1				
17-475		BOOT,DUST-CHANGE LEVER			
M514-17-480 A (M514-17-480A)	1				-0515
M514-17-480A	1				0515-
17-475A		GASKET,SPRING CAP			
M501-17-475	1				
17-476		SPINDLE,SELECT LOCK			
M502-17-476A	1				
17-481S		BUSH SET,CHANGE LEVE			
M505-99-178	1				

0116 NA35MM-134600
0316 NA35MM-144394
0515 NA35MM-151991

1720 CHANGE CONTROL SYSTEM (MANUAL)

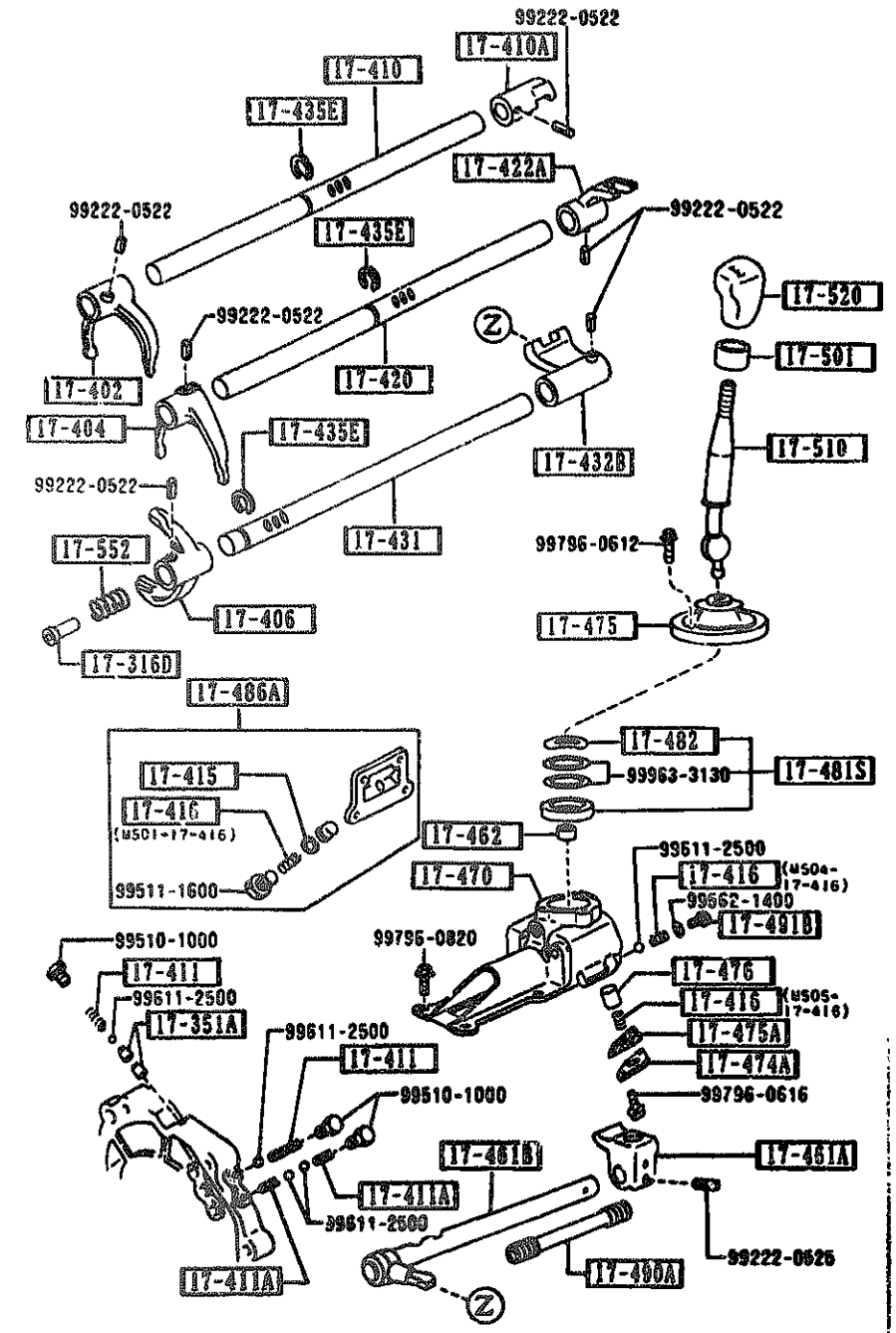

PART NO.	QTY	MODEL/RESTRICTION	MODEL/RESTRICTION	MODEL/RESTRICTION	FROM-TO
17-482		WASHER,WAVE-CHANGE CONT.CASE			
M505-17-482	1				
17-486A		COVER,BLIND			
R501-17-47X	1				
17-490A		COVER,ROD			
M504-17-490A	1				
17-491B		CAP,SPRING			
0183-17-491	1				
17-501		INSULATOR,CHG LEVER			
M501-17-501	1				
17-510		LEVER,CHANGE			
M524-17-510A	1				
17-520		KNOB,CHANGE LEVER			
M515-17-520	1				
00		NAO BLACK			
17-552		SPRING			
M504-17-552	1				

AUNA01

1800 -1 ENGINE ELECTRICAL SYSTEM

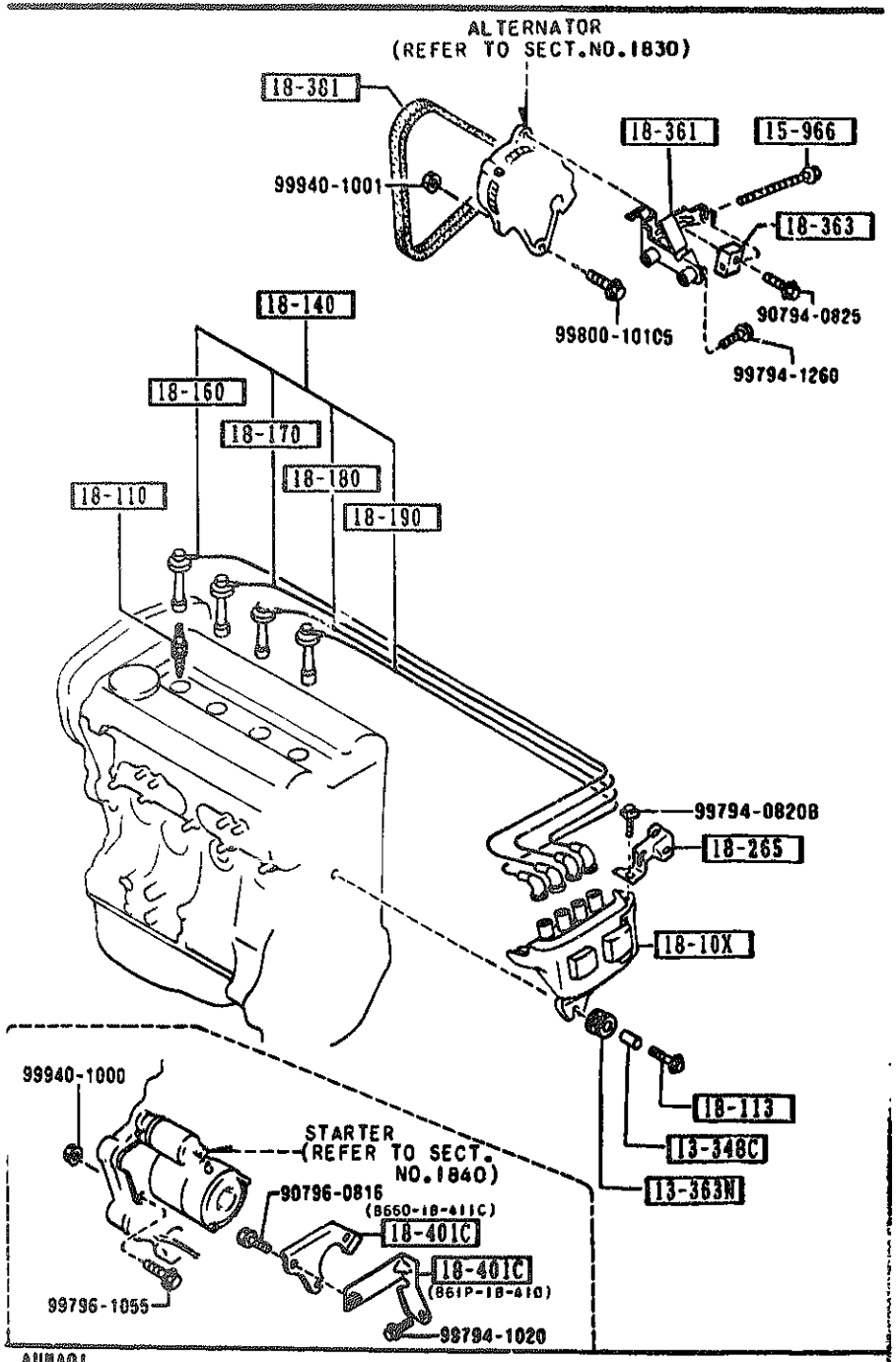

AUNA01

PART NO.	QTY	MODEL/RESTRICTION	MODEL/RESTRICTION	MODEL/RESTRICTION	FROM-TO
13-348C		SPACER			
B61P-13-348	1				
13-363N		RUBBER,MOUNTING			
B61P-13-363A	1				
15-966		BOLT,ADJUST			
FE38-15-966	1				
18-10X		COIL & IGNITER			
B61P-18-10XB AN(B61P-18-10XC)	1				-0521
B61P-18-10XC	1				0521-
18-110		PLUG,SPARK			
BP01-18-110	4	BKR5E11 NGK (OPTION HOT TYPE)			
BP02-18-110	4	K16PR-U11 DENSO (OPTION HOT TYPE)			
BP03-18-110	4	BKR6E-11 NGK (STD.)			
BP04-18-110	4	K20PR-U11 DENSO (STD.)			
BP05-18-110	4	BKR7E11 NGK (OPTION COLD TYPE)			
BP06-18-110	4	K22PR-U11 DENSO (OPTION COLD TYPE)			
18-113		BOLT			
B61P-18-1A5A	1				
18-140		CORD SET,HI.TENSION			
B61P-18-140B	1				
18-160		CORD NO.1,HI.TENSION			
B61P-18-160B	1				
18-170		CORD NO.2,HI.TENSION			
B61P-18-170B	1				
18-180		CORD NO.3,HI.TENSION			
B61P-18-180B	1				

0521 NA35**-152930

1800 -2 M ENGINE ELECTRICAL SYSTEM

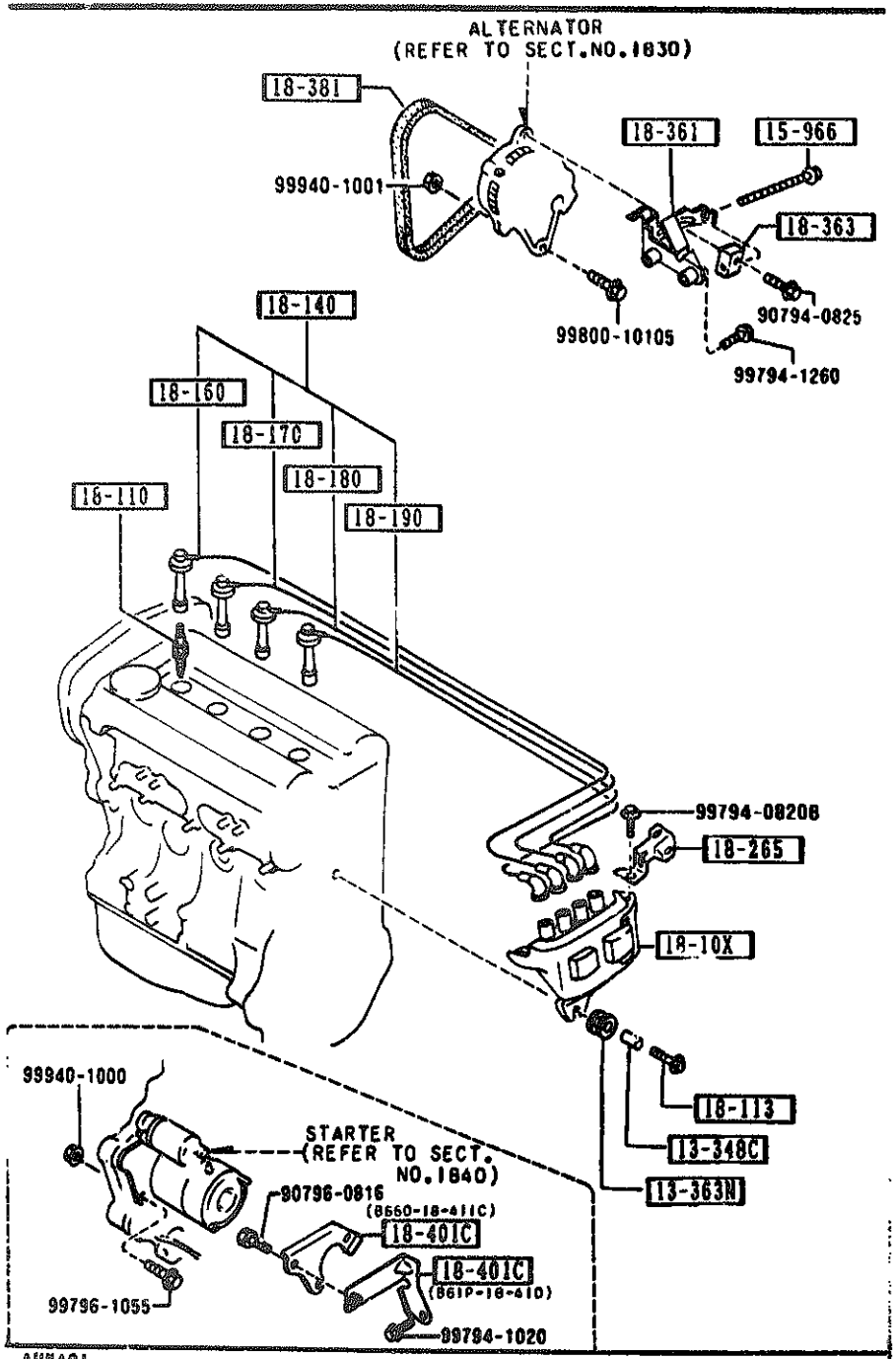

PART NO.	QTY	MODEL/RESTRICTION	MODEL/RESTRICTION	MODEL/RESTRICTION	FROM-TO
18-190		CORD NO.4,HI.TENSION			
B61P-18-190B	1				
18-265		CLIP,COUPLER			
B61R-18-266 A (B61R-18-266A)	1				-9A13
B61R-18-266A	1				9A13-
18-361		STRAP,ALTERNATOR			
B61P-18-360 A (B61P-18-360A)	1				-9B01
B61P-18-360A	1				9B01-
18-363		SPACER,STRAP			
F201-18-363	1				
18-381		BELT'V'			
B6S7-18-381A A (B6S7-18-381B)	1	AUTO-FLEX-3 A-34.7			-0308
B6S7-18-381B	1	AUTO-FLEX-3 A-34.7			0308-
18-401C		BRACKET,STARTER			
B61P-18-410	1				
8660-18-411C	1				

9A13 NA35MM-124217
9B01 NA35MM-126490
0308 NA35MM-142998

AUNA01

SECTION NAME INDEX (ENGINE)

LO.NO	SEC.NO	SECTION NAME	LO.NO	SEC.NO	SECTION NAME	LO.NO	SEC.NO	SECTION NAME
1-C03	1000	SHORT ENGINE & GASKET SETS						
1-D03	1010	CYLINDER HEAD & COVER						
1-G03	1030	CYLINDER BLOCK						
1-I03	1040	OIL PAN & TIMING COVER						
1-K03	1100	PISTON,CRANKSHAFT & FLYWHEEL						
1-N03	1200	VALVE SYSTEM						
1-D04	1300	INLET MANIFOLD						
1-E04	1310	EXHAUST MANIFOLD						
1-F04	1320	FUEL SYSTEM						
1-H04	1325	FUEL DISTRIBUTOR						
1-I04	1330	AIR CLEANER						
1-K04	1364	THROTTLE BODY						
1-L04	1370	EMISSION CONTROL SYSTEM (INLET SIDE)						
1-M04	1399	CAP & HOSE CLIP (INLET & EXHAUST SIDE)						
1-N04	1400	OIL PUMP & FILTER						
1-C05	1500	COOLING SYSTEM						
1-G05	1580	BRACKET,PULLEY & BELT						
1-C06	1600	CLUTCH DISC & COVER (MANUAL)						
1-D06	1700	TRANSMISSION CASE (MANUAL)						
1-E06	1710	TRANSMISSION GEARS(MANUAL)						
1-J06	1720	CHANGE CONTROL SYSTEM (MANUAL)						
1-M06	1800	ENGINE ELECTRICAL SYSTEM						
1-C07	1830	ALTERNATOR						
1-E07	1840	STARTER						
1-G07	1850	BATTERY						
1-H07	1910	TORQUE CONVERTER,OIL PUMP & PIPINGS (AUTOMATIC)						
1-K07	1920	TRANSMISSION CASE & MAIN CONTROL SYSTEM (AUTOMATIC)						
1-E08	1925	CONTROL VALVE (AUTOMATIC)						
1-I08	1930	CLUTCHES & PLANETARY GEARS (AUTOMATIC)						
1-D09	1940	GOVERNOR, LOW, & REVERSE PISTON (AUTOMATIC)						
1-G09	1950	MANUAL LINKAGE SYSTEM (AUTOMATIC)						
1-I09	1960	GASKET & SEAL KIT (AUTOMATIC)						



1830 ALTERNATOR

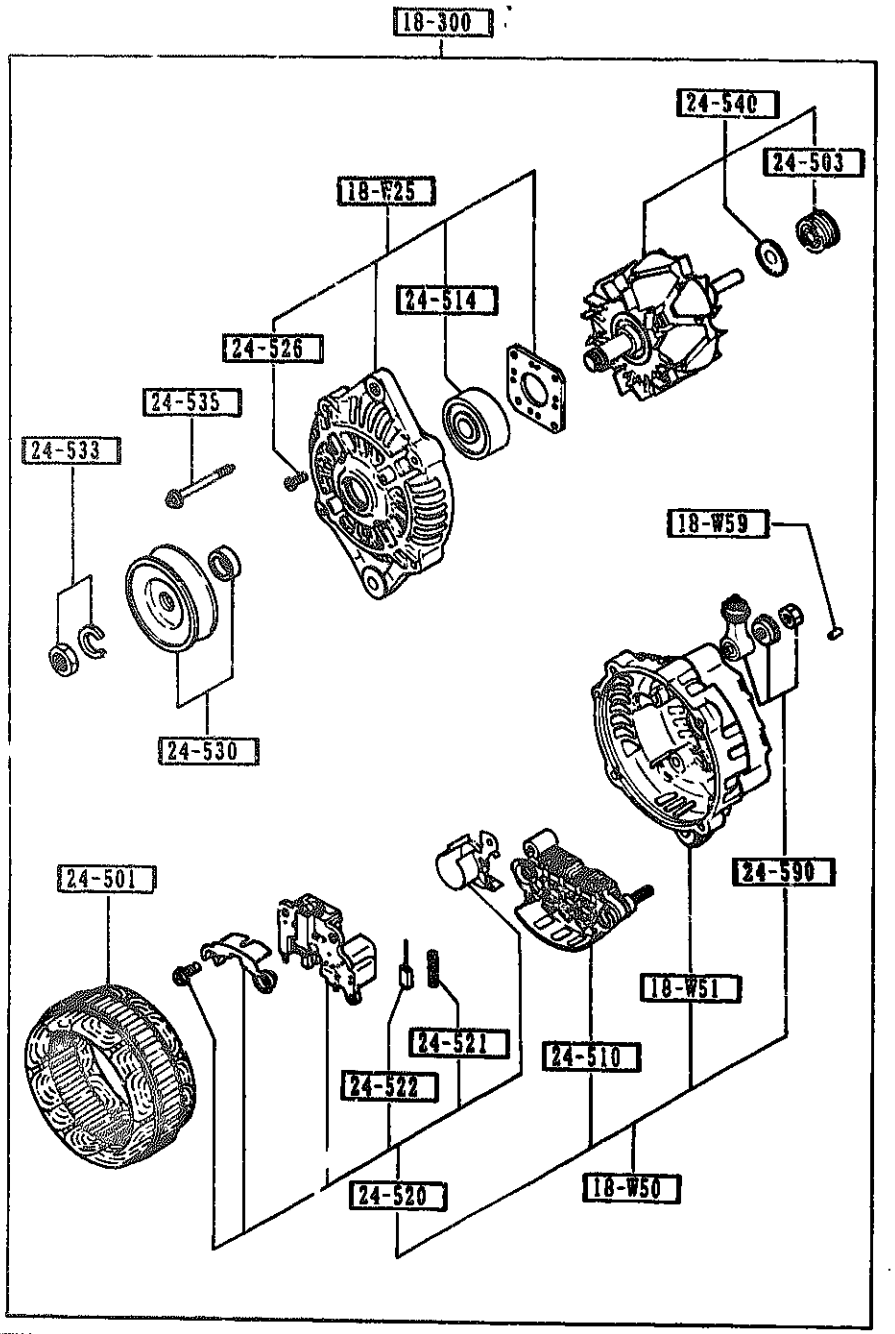

PART NO.	QTY	MODEL/RESTRICTION	MODEL/RESTRICTION	MODEL/RESTRICTION	FROM TO
18-W25		COVER,FRONT-ALTERNATOR			
B61P-18-W25	1				
18-W50		COVER,REAR-ALTERNATOR			
B61P-18-W50	1	(MT)			
B64J-18-W50	1	(AT)			
18-W51		COVER,REAR-ALTERNATOR			
B366-18-W51	1				
18-W59		PLUG			
B675-18-W59	1				
18-300		ALTERNATOR			
B61P-18-300D	1	(MT)			
B64J-18-300A	1	(AT)			
24-501		STATOR			
B366-18-W45	1	(AT)			
G608-18-W45	1	(MT)			
24-503		BEARING,BALL-ALT. REAR			
N336-18-W36	1				
24-510		RECTIFIER			
B366-18-W60	1	(AT)			
B61P-18-W60	1	(MT)			
24-514		BEARING,BALL-ALT. FRONT			
F811-18-W27	1				
24-520		REGULATOR			
B61P-18-W70	1				
24-521		SPRING,BRUSH			
8599-24-521	2				
24-522		BRUSH			
FE2H-18-W77	2				

1830 -2 H ALTERNATOR

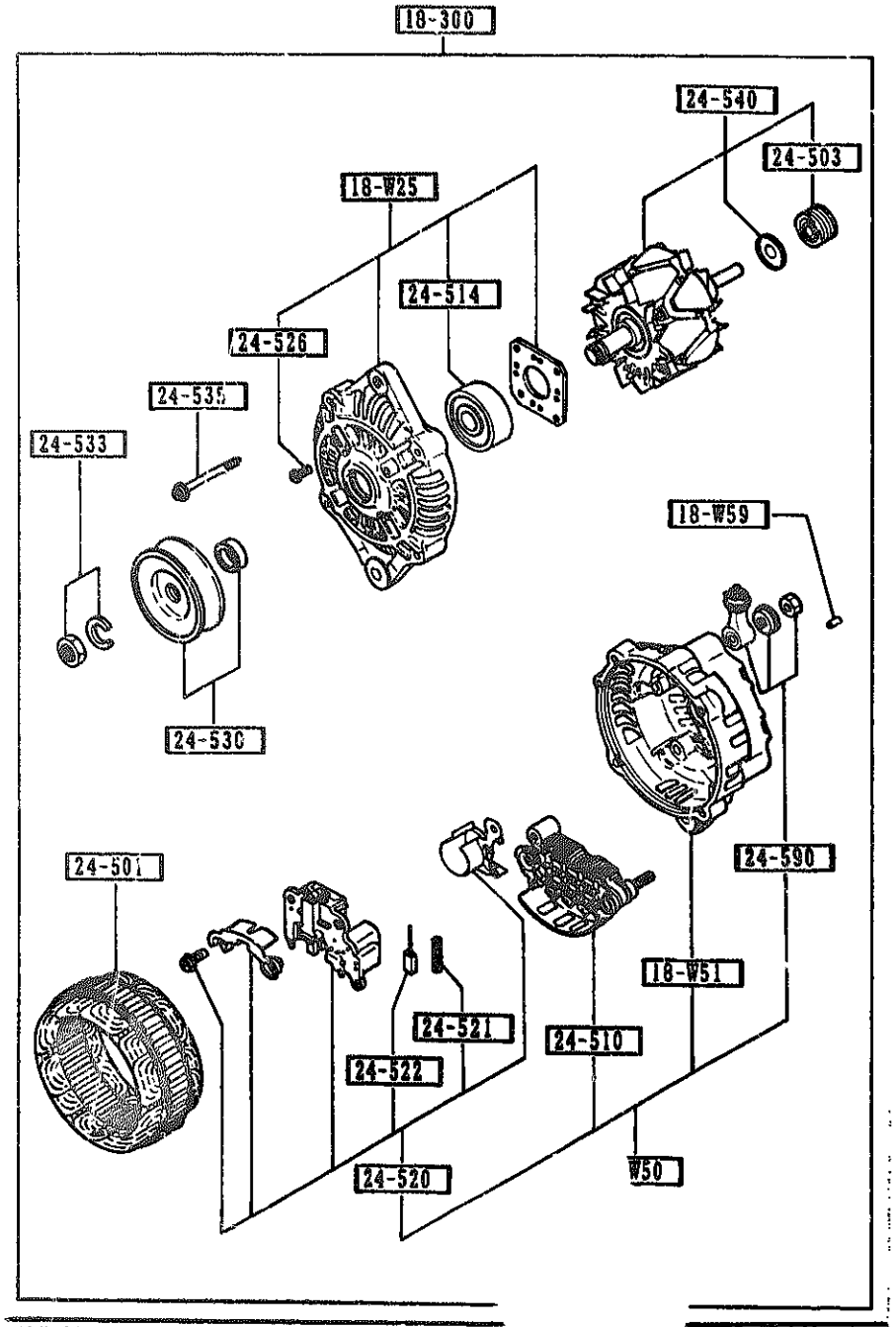

PART NO.	QTY	MODEL/RESTRICTION	MODEL/RESTRICTION	MODEL/RESTRICTION	FROM TO
24-526		SCREW SET			
RF71-18-W26	1				
24-530		PULLEY			
B366-18-W10	1				
24-533		NUT SET			
8028-24-533	1				
24-535		SCREW SET			
RF71-18-W20	1				
24-540		ROTOR			
B61P-18-W35	1	(MT)			
B366-18-W35	1				-0601
A (B366-18-W35A)					
B366-18-W35A	1	(AT)			0601-
24-590		TERMINAL SET			
N337-18-W80	1				

0601 NA35HH-154752

1840 -1 STARTER

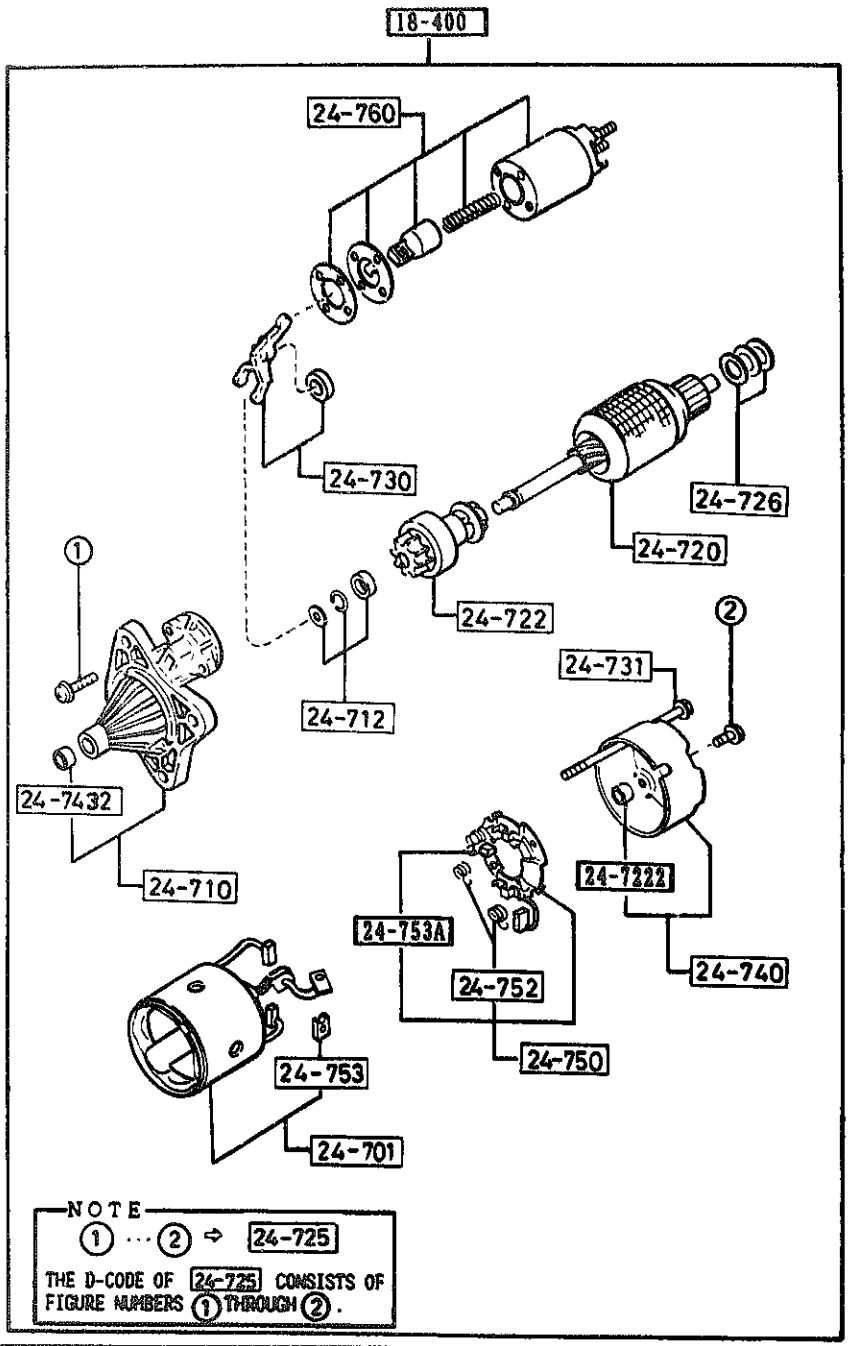

PART NO.	QTY	MODEL/RESTRICTION	MODEL/RESTRICTION	MODEL/RESTRICTION	FROM-TO
18-400		STARTER			
B61R-18-400 A (B61R-18-400A)	1	ASBESTOS			-9B21
B61R-18-400A	1	NON ASBESTOS			9B21-
24-701		YOKE			
B61R-18-X65	1				
24-710		BRACKET,FRONT			
B61R-18-X00	1				
24-712		STOPPER SET			
E356-18-X30	1				
24-720		ARMATURE			
F210-18-X60	1	ASBESTOS			-9B21
B6S8-18-X60	1	NON ASBESTOS			9B21-
24-722		CLUTCH,OVER RUNNING			
B630-18-X45	1				
24-7222		SLEEVE,BEARING-REAR			
E356-18-X81	1				
24-725		SCREW SET			
E356-18-X95	1				
24-726		WASHER SET			
E356-18-X92	1				
24-730		LEVER			
E356-18-X05	1				
24-731		BOLT SET			
B630-18-X90	2				
24-740		BRACKET,REAR			
E356-18-X80	1				

9B21 NA35##-129010

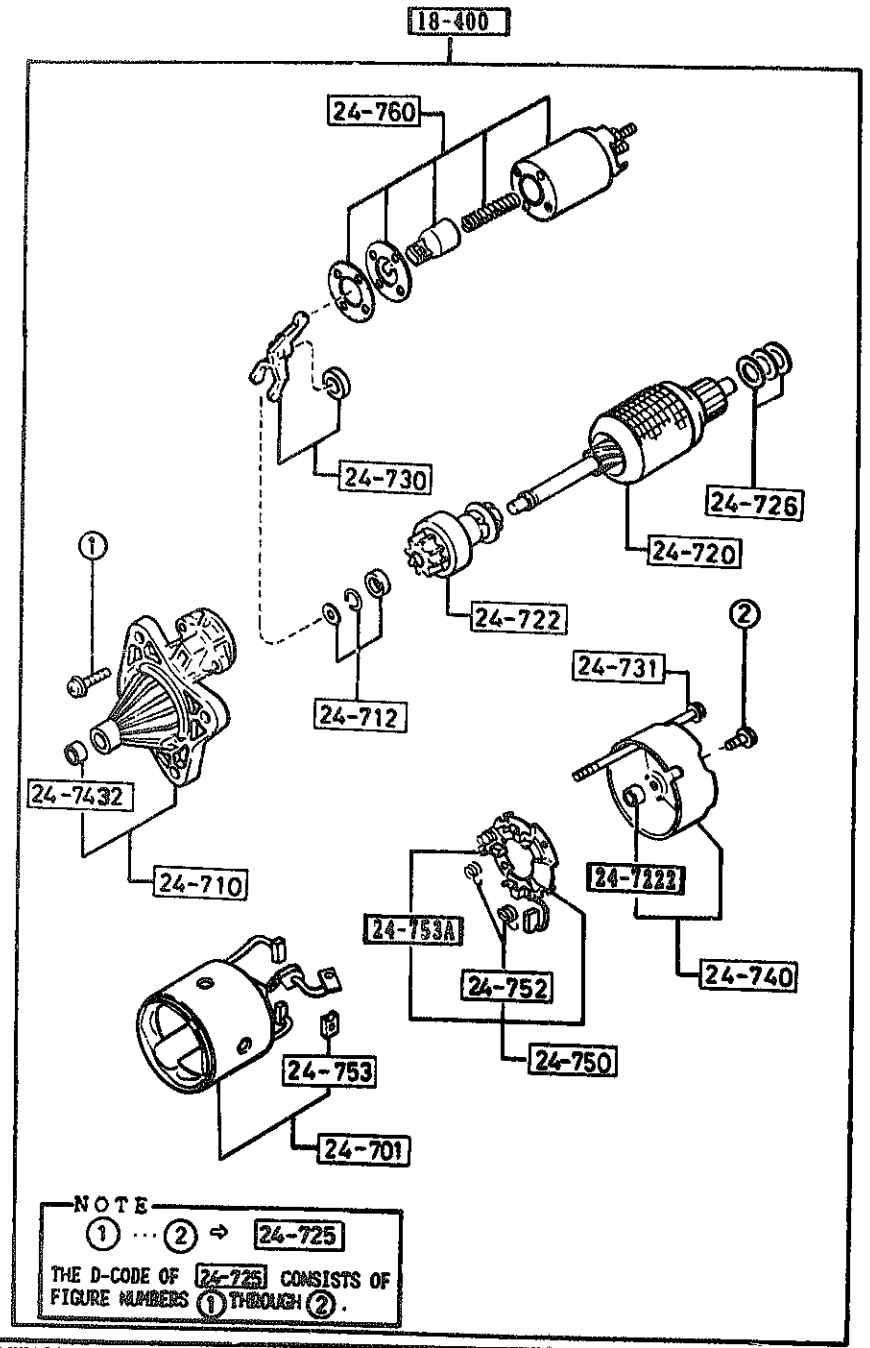

PART NO.	QTY	MODEL/RESTRICTION	MODEL/RESTRICTION	MODEL/RESTRICTION	FROM-TO
24-7432		SLEEVE,BEARING-FRONT			
F210-18-X01	1				
24-750		HOLDER,BRUSH			
B61R-18-X70	1				
24-752		SPRING,BRUSH			
0222-24-752A	4				
24-753		BRUSH,YOKE			
B630-18-X66	2				
24-753A		BRUSH			
B660-18-X66	2				
24-760		SWITCH			
E356-18-X10	1				

1850 BATTERY

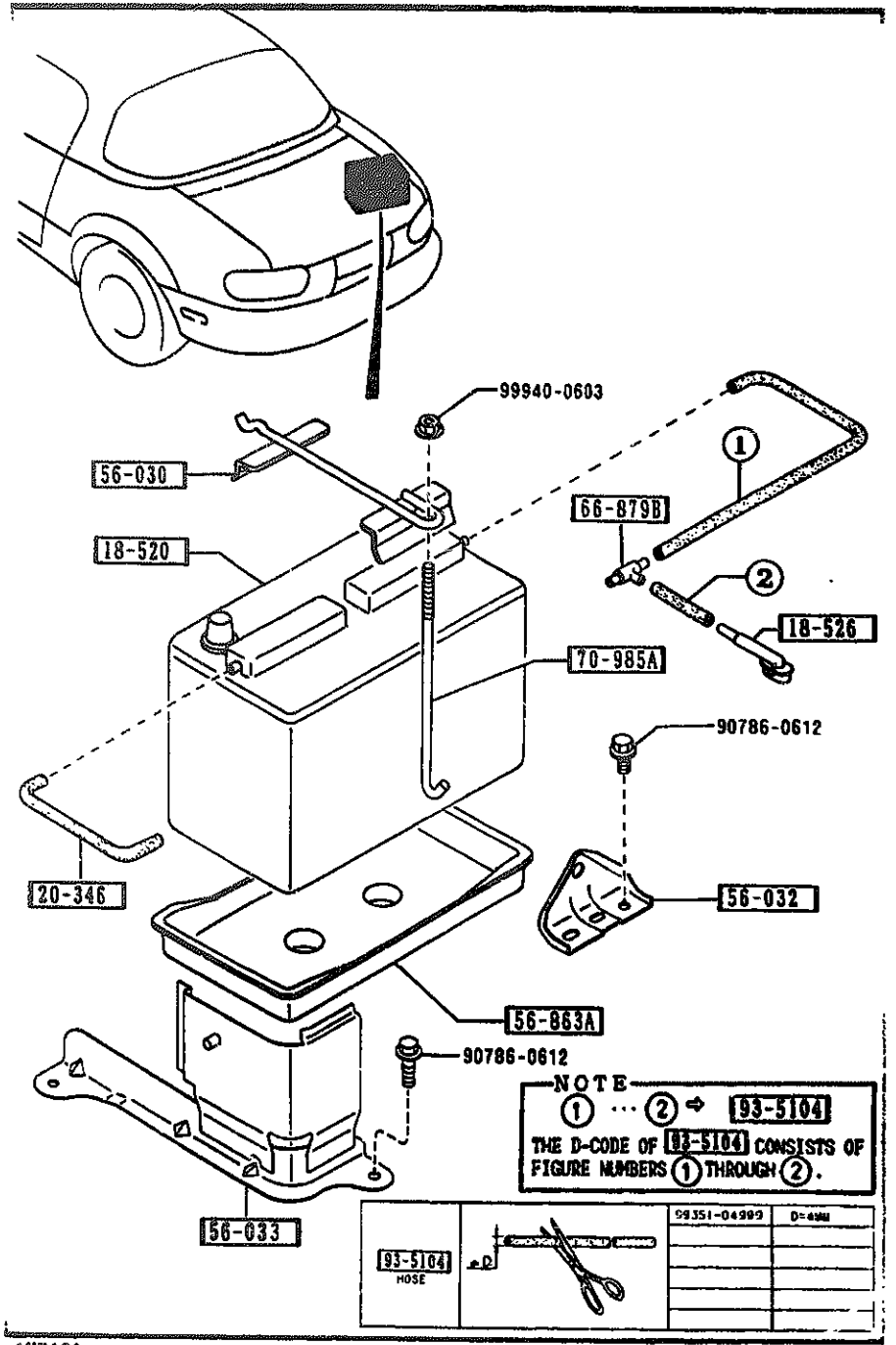

PART NO.	QTY	MODEL/RESTRICTION	MODEL/RESTRICTION	MODEL/RESTRICTION	FROM-TO
18-520		BATTERY			
B61R-18-520A AN(B61R-18-520B)	1	S46A24L(S) PANASONIC			-0201
B61R-18-520B	1	S46A24L(S) PANASONIC			0201-
18-526		CONNECTOR,TUBE-BATTERY			
B61P-18-526	1				
20-346		TUBE,VACUUM			
FE4J-20-346	1				-9901
B61P-18-524	1				9901-
56-030		CLAMP,BATTERY			
NA01-56-03XA	1				
56-032		BRACKET,BATTERY CLAMP			
NA01-56-032A	1	(W/STD.BATTERY)			
56-033		BRACKET,STOPPER-BATTERY			
NA01-56-033A	1	(W/STD.BATTERY)			
56-863A		TRAY,BATTERY			
B095-56-032	1				
66-879B		JOINT			
0813-66-879	1				
70-985A		BOLT,CLAMP			
0259-54-292A	1				
93-5104		HOSE			
99351-04999	1				

9901 NA35##-119257
0201 NA35##-137180

AUNA01

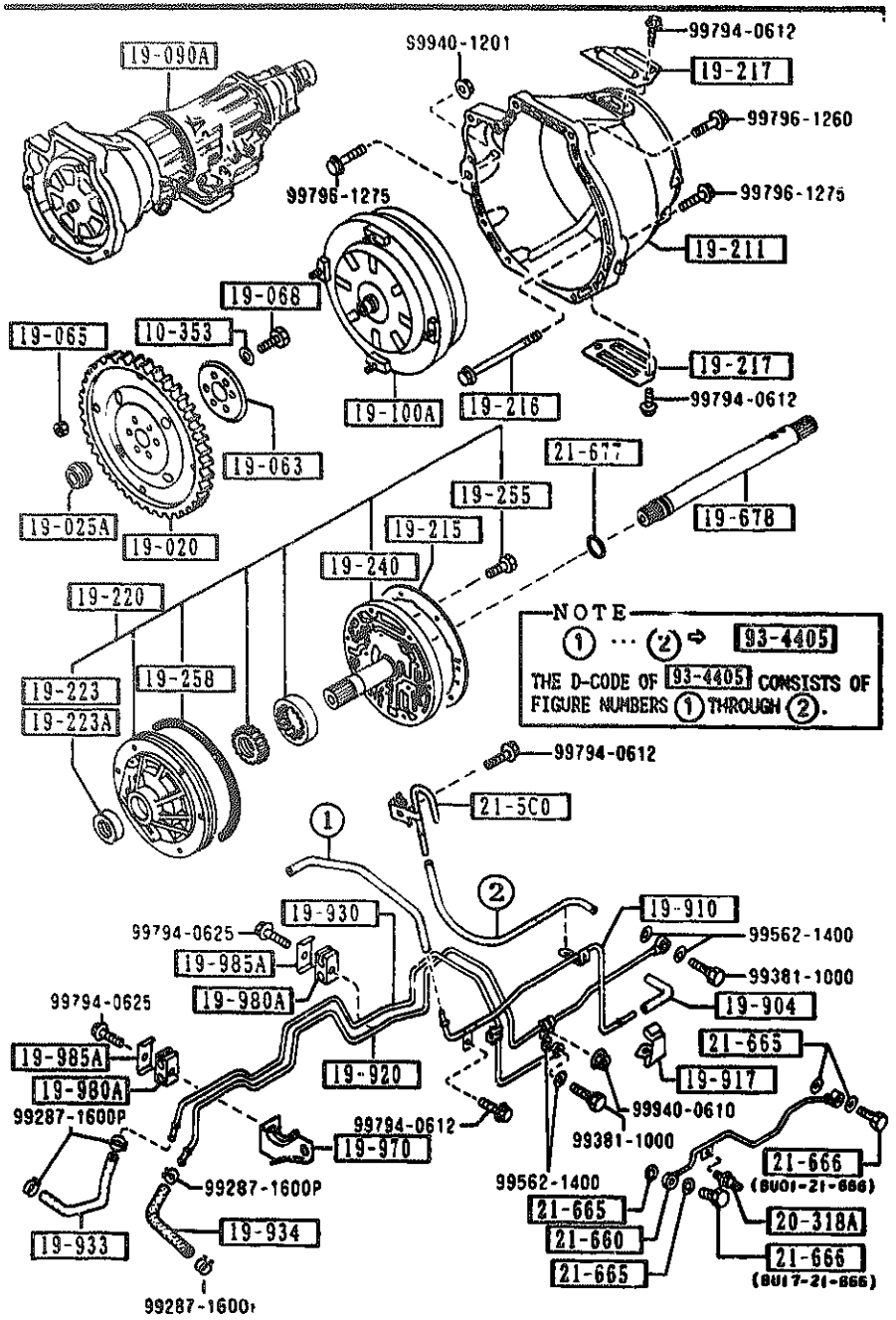

AUNA01

PART NO.	QTY	MODEL/RESTRICTION	MODEL/RESTRICTION	MODEL/RESTRICTION	FROM-TO
10-353		WASHER,PLAIN			
0290-10-353	6				
19-020		PLATE,DRIVE			
BU55-19-020	1				
19-025A		ADAPTER,DRIVE PLATE			
FU60-19-025	1				
19-063		PLATE,BACKING			
FT31-19-063	1				
19-065		NUT			
FU51-19-065	4				
19-068		BOLT,LOCK			
FT31-19-064	6				
19-090A		T/MISSION CPT.			
BUY2-19-090 AN(BUY2-19-090A)	1				-0301
BUY2-19-090A	1				0301-
19-100A		CONVERTER,TORQUE			
BU55-19-100	1				
19-211		HOUSING,CONVERTER			
BU55-19-211	1				
19-215		GASKET,OIL PUMP			
BU01-19-215	1	ASBESTOS			
19-216		BOLT			
BU01-19-216	6				
19-217		COVER,BLIND			
BU55-19-217	2				
19-220		PUMP,OIL			
BU55-19-220	1				

0301 NA35HM-141901

CAT. AUNA01-07

1992-02

1910 -2 TORQUE CONVERTER,OIL PUMP & PIPINGS (AUTOMATIC)

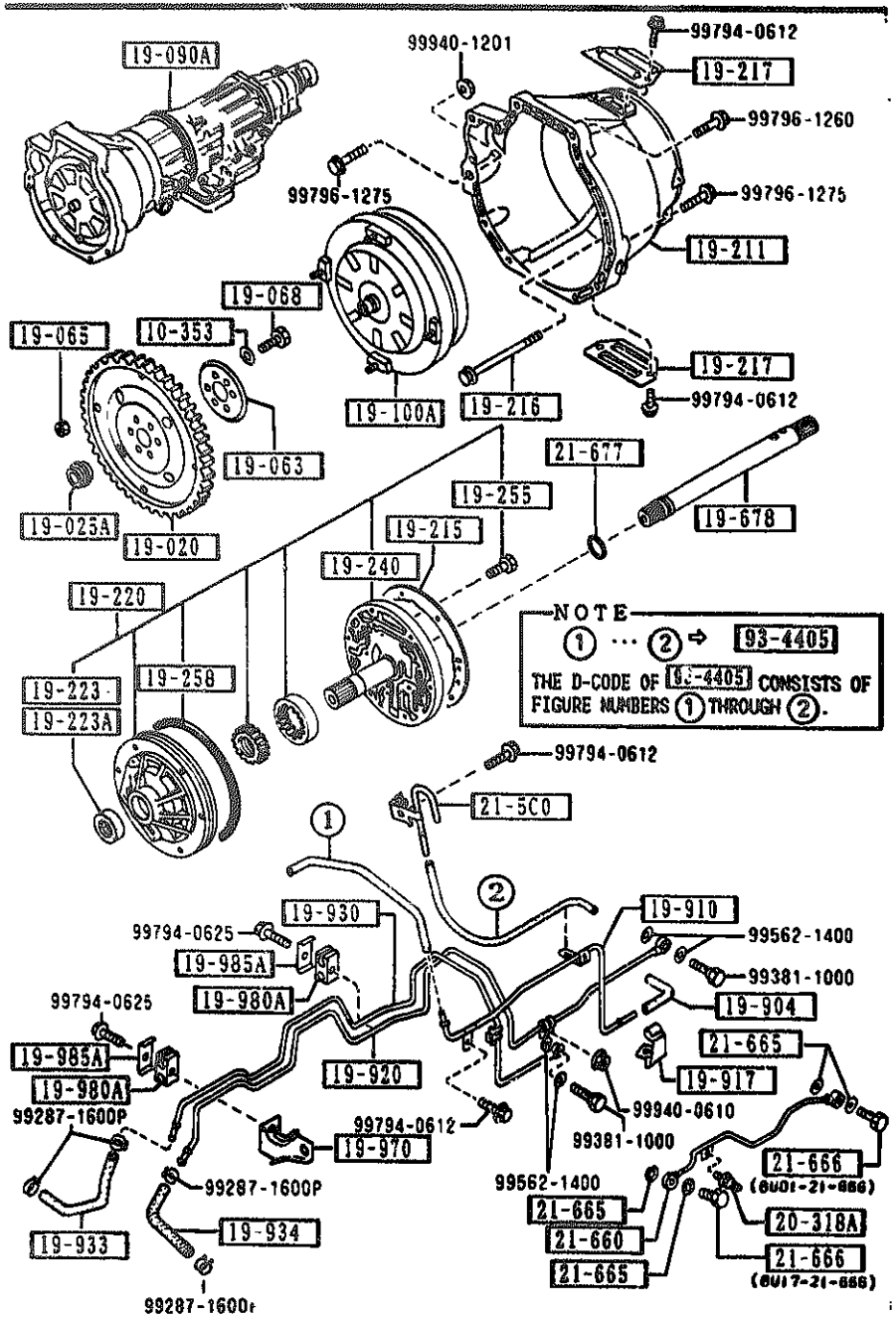

PART NO.	QTY	MODEL/RESTRICTION	MODEL/RESTRICTION	MODEL/RESTRICTION	FROM-TO
19-223 8U55-19-223	1	SEAL,OIL			
19-223A 0338-19-223A	1	SEAL,OIL			
19-240 8U55-19-240	1	COVER,OIL PUMP			
19-255 0338-19-255	5	BOLT			
19-258 0338-19-258	1	SEAL,CUT RING			
19-678 8U55-21-678	1	SHAFT,INPUT			
19-904 0338-19-904A	1	HOSE,VACUUM			
19-910 8U55-19-910A	1	PIPE,VACUUM			
19-917 8U17-19-917	1	CLIP			
19-920 8U55-19-920B A (8U55-19-920C)	1	PIPE,OIL			-0221
8U55-19-920C	1				0221-
19-930 8U55-19-930B A (8U55-19-930C)	1	PIPE,OIL			-0221
8U55-19-930C	1				0221-
19-933 8U55-19-933A	1	HOSE,OIL			
19-934		HOSE,OIL			

0221 NA35MM-140695

1910 TORQUE CONVERTER,OIL PUMP & PIPINGS (AUTOMATIC)

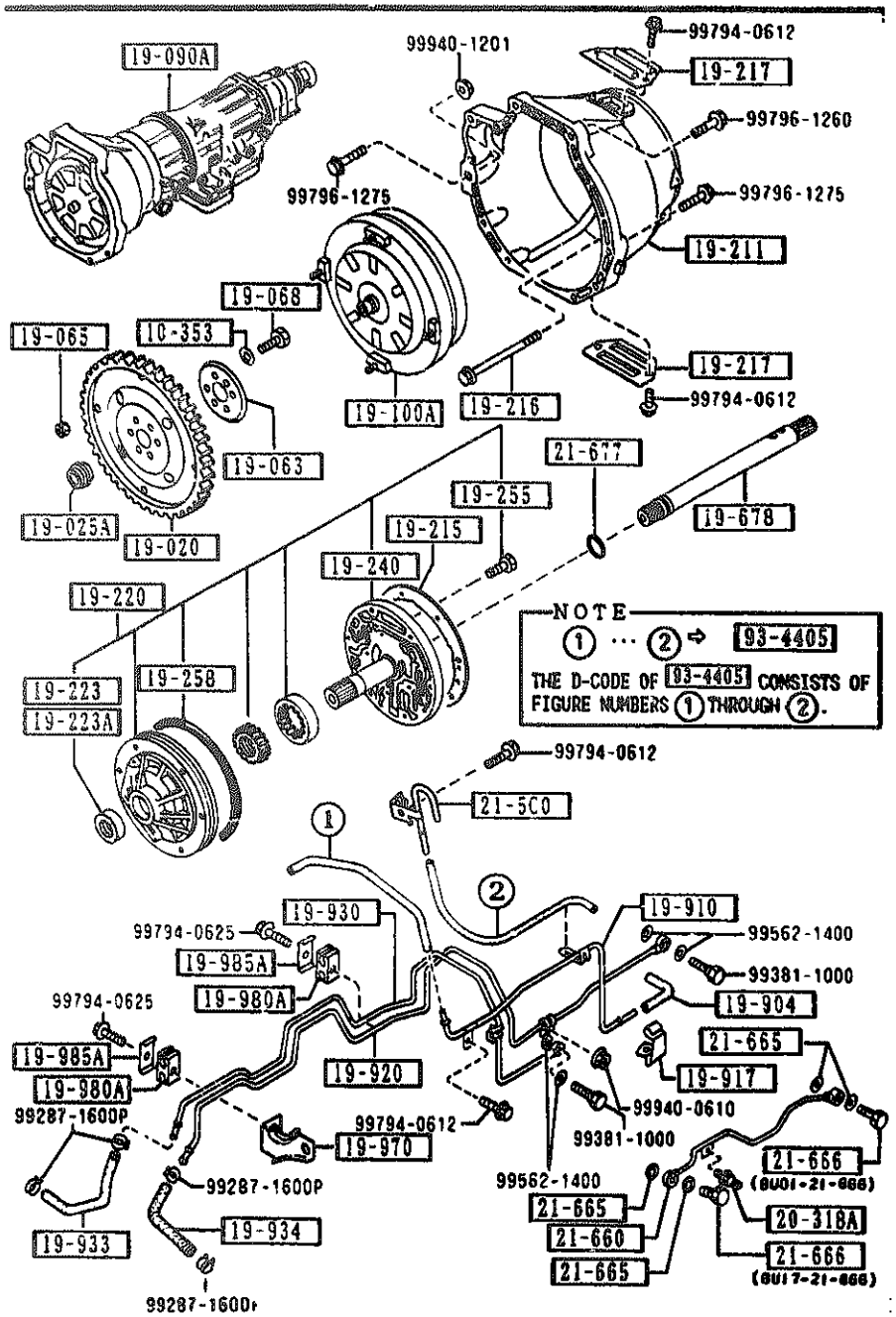

PART NO.	QTY	MODEL/RESTRICTION	MODEL/RESTRICTION	MODEL/RESTRICTION	FROM-TO
CONT'D					
BU55-19-934A	1				
19-970		BRACKET			
BU55-19-970A	1				
19-980A		SUPPORT,OIL PIPE			
BU29-19-980	2				
19-985A		CLIP,OIL PIPE			
BU29-19-985	2				
20-318A		BOLT			
BU27-19-838	1				
21-5C0		BREATHER			
BU55-21-5C0A	1				
21-660		TUBE,GOVERNOR			
BU55-21-660	1				
21-665		WASHER,SEAL			
BU01-21-665	4				
21-666		BOLT,CONNECTOR			
BU01-21-666	1				
BU17-21-666	1				
21-677		RING,'O'			
BU01-21-677	1				
93-4405		HOSE			
99344-05150	1				

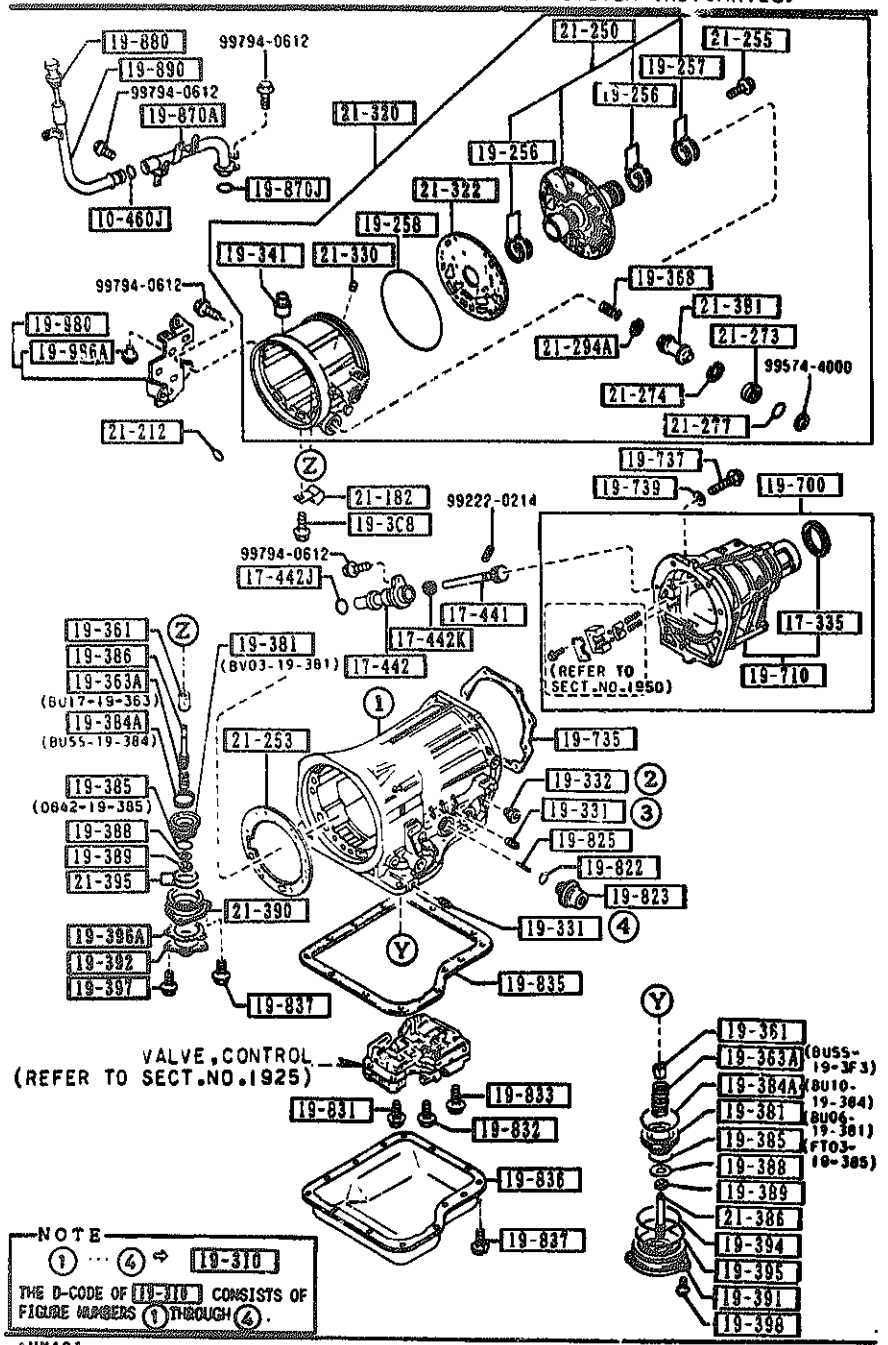

AUHA01

PART NO.	QTY	MODEL/RESTRICTION	MODEL/RESTRICTION	MODEL/RESTRICTION	FROM-TO
10-460J		RING,'O'			
99541-01201	1				
17-335		SEAL,OIL			
M507-17-335	1				
17-441		GEAR,DRIVEN			
BU55-17-441	1				
17-442		SLEEVE,SPEEDOMETER			
BU55-17-442	1				
17-442J		RING,'O'			
1011-17-443	1				
17-442K		SEAL,OIL			
99586-08166	1				
19-256		RING,SEAL			
BU01-19-256	4				
19-257		RING,SEAL			
BU01-19-257	2				
19-258		SEAL,CUT RING			
0338-19-258	1				
19-3C8		BOLT,BUFFLE PLATE			
BU55-19-3C8	1				
19-310		CASE,T/MISSION			
BU55-19-310A	1				
19-331		PLUG,SQUARE HEAD			
BV11-19-3C4	2				
19-332		CONNECTOR,STRAIGHT			
BU01-19-332A	1				
19-341		BOLT,ANCHOR END			
0338-19-341	1				

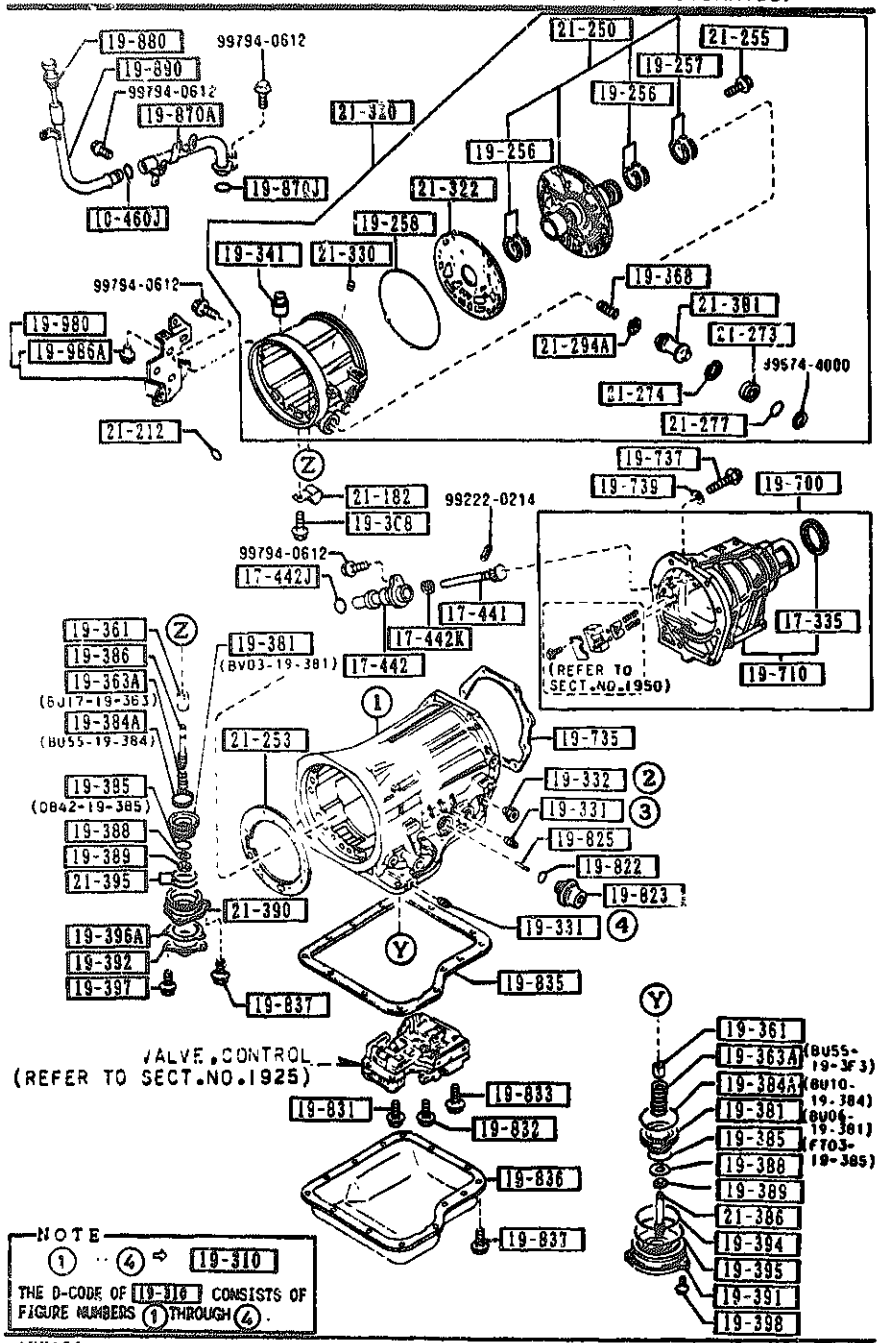

PART NO.	QTY	MODEL/RESTRICTION	MODEL/RESTRICTION	MODEL/RESTRICTION	FROM TO
19-361		STRUT,BAND			
0338-19-361B	2				
19-363A		SPRING,PISTON RETURN			
BU55-19-3F3	1				
BU17-19-363	1				
19-368		SPRING,CUSHION-PSTN. STEM			
BU20-19-368	1				
19-381		PISTON,BAND SERVO			
BU06-19-381	1				
BV03-19-381	1				
19-384A		SEAL,PISTON			
BU10-19-384	1				
BU55-19-384	1				
19-385		SEAL,PISTON			
FT03-19-385	1	D=44MM			
0842-19-385	1	D=36MM			
19-386		STEM,PISTON			
0338-19-386A	1				
19-388		WASHER,PLAIN			
0338-19-388A	2				
19-389		NUT			
0338-19-389	2				
19-391		RETAINER,SERVO			
BU06-19-391	1				
19-392		COVER,SERVO			
1758-19-392A	1				
19-394		SEAL,LATHE CUT			
0842-19-394	1				

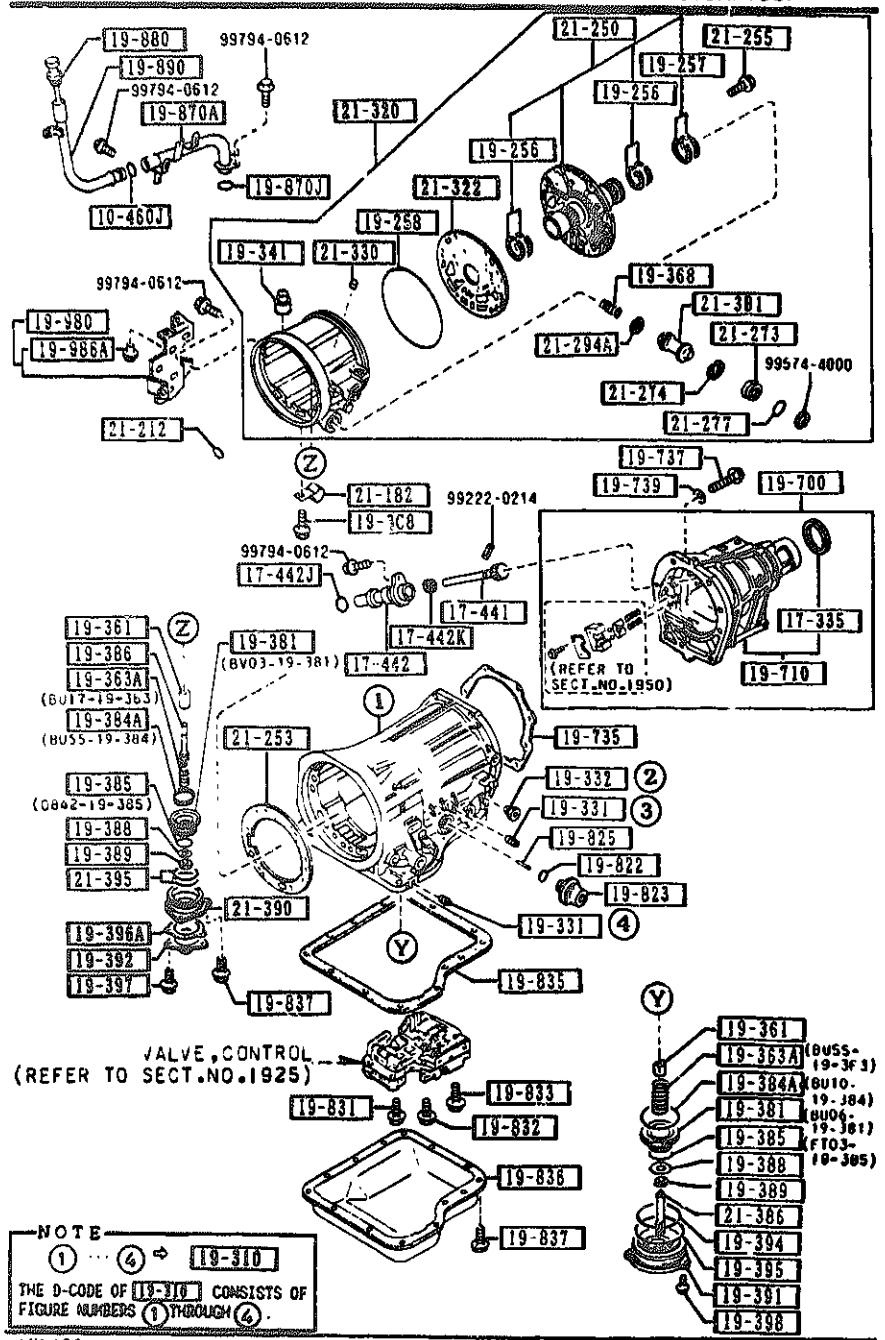

AUNA01

PART NO.	QTY	MODEL/RESTRICTION	MODEL/RESTRICTION	MODEL/RESTRICTION	FROM TO
19-395		RING,'O'			
0338-19-395	1				
19-396A		GASKET			
1758-19-394A		ASBESTOS			
	1				
19-397		BOLT			
1758-19-397	3				
19-398		BOLT			
0338-19-398	3				
19-700		HOUSING,EXTENSION			
BUY2-19-7A0	1				
19-710		HOUSING,EXTENSION			
BU55-19-710	1				
19-735		GASKET,EXTENSION			
0338-19-735		ASBESTOS			
	1				
19-737		BOLT			
0338-19-737	8				
19-739		WASHER,PLAIN			
0338-19-739	8				
19-822		SEAL,'O'RING			
0338-19-822	2				
19-823		DIAPHRAGM,VACUUM			
BU55-19-823	1				
19-825		ROD,DIAPHRAGM			
BU55-19-825		L=29.75MM			
	1				
0338-19-825		L=30MM			
	1				
0338-19-826		L=31MM			
	1				

1920 TRANSMISSION CASE & MAIN CONTROL SYSTEM (AUTOMATIC)

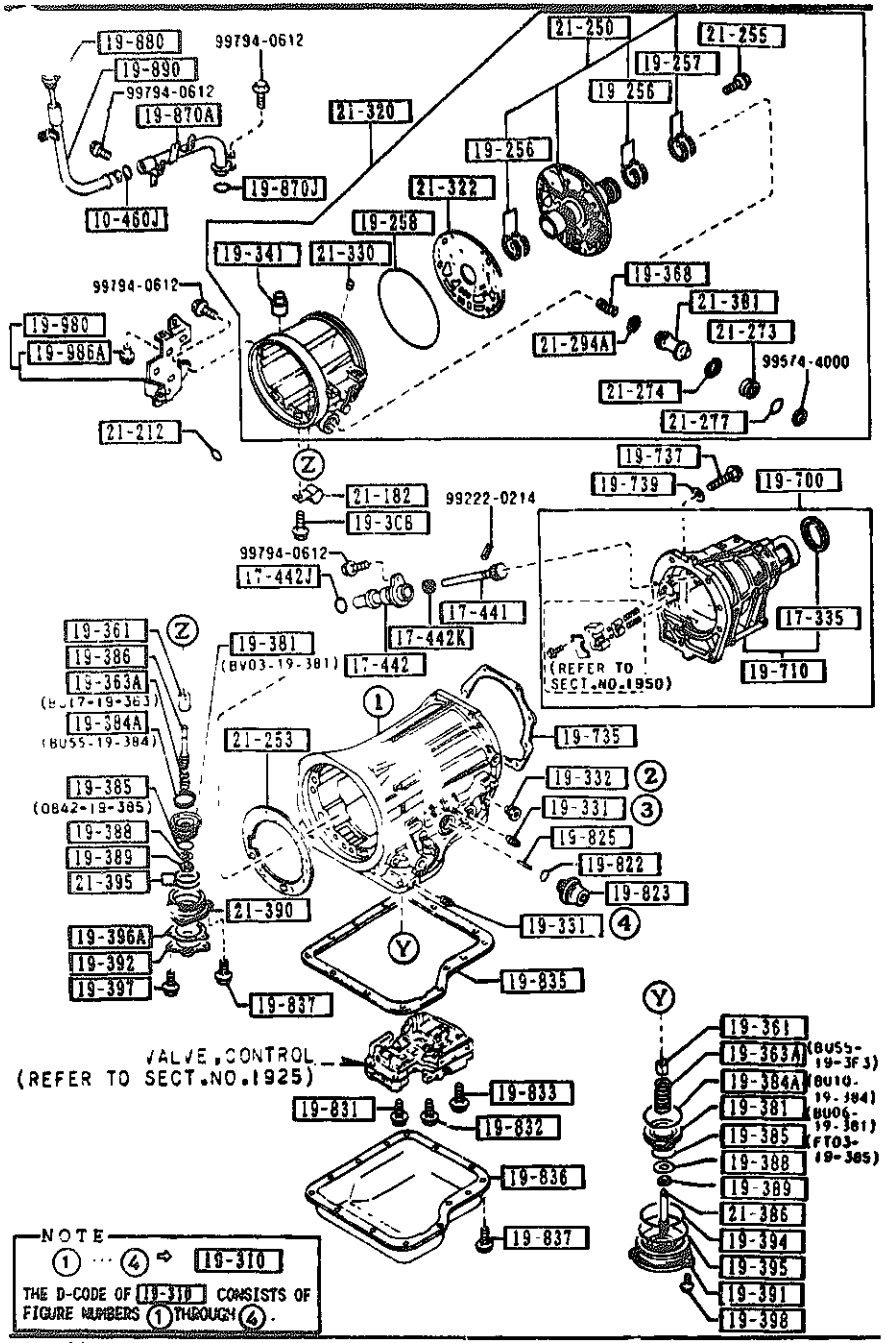

AUNA01

PART NO.	QTY	MODEL/RESTRICTION	MODEL/RESTRICTION	MODEL/RESTRICTION	FROM TO
CONT'D					
0338-19-827	1	L=30.5MM			
0338-19-828	1	L=29MM			
0338-19-829	1	L=29.5MM			
19-831		BOLT,CONTROL VALVE			
0338-19-831	2				
19-832		BOLT,CONTROL VALVE			
0338-19-832	2				
19-833		BOLT,CONTROL VALVE			
0338-19-833	3				
19-835		GASKET,OIL PAN			
0338-19-835B	1	ASBESTOS			
19-836		PAN,OIL			
0338-19-836A	1				
19-837		BOLT,OIL PAN			
0338-19-837	17				
19-870A		TUBE,FILLER			
BU55-19-870	1				
19-870J		RING,'O'			
99541-01601	1				
19-880		GAUGE,OIL LEVEL			
BU17-19-880B	1				
19-890		TUBE,OIL FILTER-UPPER			
BU55-19-890	1				
19-980		BRACKET			
BU55-19-980A	1				
19-986A		BUSH,RUBBER			

CAT. AUNA01-07

1992-02

SECTION NAME INDEX (ENGINE)

LO.NO	SEC.NO	SECTION NAME	LO.NO	SEC.NO	SECTION NAME	LO.NO	SEC.NO	SECTION NAME
1-C03	1000	SHORT ENGINE & GASKET SETS						
1-D03	1010	CYLINDER HEAD & COVER						
1-G03	1030	CYLINDER BLOCK						
1-I03	1040	OIL PAN & TIMING COVER						
1-K03	1100	PISTON,CRANKSHAFT & FLYWHEEL						
1-N03	1200	VALVE SYSTEM						
1-D04	1300	INLET MANIFOLD						
1-E04	1310	EXHAUST MANIFOLD						
1-F04	1320	FUEL SYSTEM						
1-H04	1325	FUEL DISTRIBUTOR						
1-I04	1330	AIR CLEANER						
1-K04	1364	THROTTLE BODY						
1-L04	1370	EMISSION CONTROL SYSTEM (INLET SIDE)						
1-M04	1399	CAP & HOSE CLIP (INLET & EXHAUST SIDE)						
1-N04	1400	OIL PUMP & FILTER						
1-C05	1500	COOLING SYSTEM						
1-G05	1580	BRACKET,PULLEY & BELT						
1-C06	1600	CLUTCH DISC & COVER (MANUAL)						
1-D06	1700	TRANSMISSION CASE (MANUAL)						
1-E06	1710	TRANSMISSION GEARS(MANUAL)						
1-J06	1720	CHANGE CONTROL SYSTEM (MANUAL)						
1-M06	1800	ENGINE ELECTRICAL SYSTEM						
1-C07	1830	ALTERNATOR						
1-E07	1840	STARTER						
1-G07	1850	BATTERY						
1-H07	1910	TORQUE CONVERTER,OIL PUMP & PIPINGS (AUTOMATIC)						
1-K07	1920	TRANSMISSION CASE & MAIN CONTROL SYSTEM (AUTOMATIC)						
1-E08	1925	CONTROL VALVE (AUTOMATIC)						
1-I08	1930	CLUTCHES & PLANETARY GEARS (AUTOMATIC)						
1-D09	1940	GOVERNOR, LOW & REVERSE PISTON (AUTOMATIC)						
1-G09	1950	MANUAL LINKAGE SYSTEM (AUTOMATIC)						
1-I09	1960	GASKET & SEAL KIT (AUTOMATIC)						

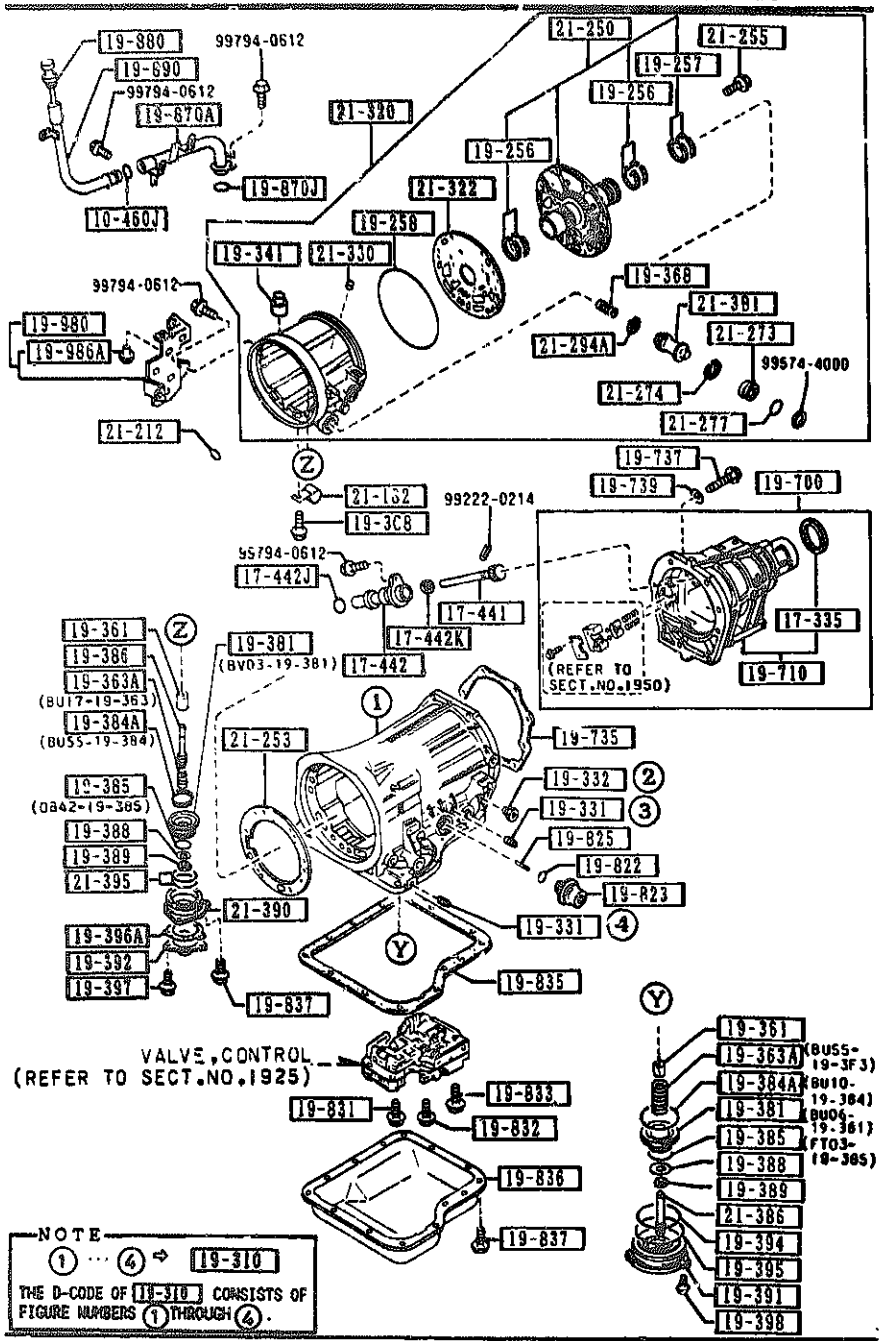

PART NO.	QTY	MODEL/RESTRICTION	MODEL/RESTRICTION	MODEL/RESTRICTION	FROM-TO
CONT'D BV01-19-98..	1				
21-182		BRACKET			
BU55-21-182	1				
21-212		RING,'O'			
BU01-21-212	2				
21-250		SUPPORT,DRUM			
BU55-21-250	1				
21-253		GASKET,DRUM SUPPORT			
BU01-21-253	1	ASBESTOS			
21-255		BOLT			
BU01-21-255	5				
21-273		PLUG,ACCUMULATOR			
BU01-21-273	1				
21-274		SEAL,'O'RING			
BU01-21-274	1				
21-277		RING,'O'			
BU01-21-277	1				
21-294A		RING,SEAL			
BU55-21-293	1				
21-381		PISTON,ACCUMULATOR			
BU55-21-381	1				
21-320		CASE,OVER DRIVE			
BU55-21-320	1				
21-322		GASKET,O/DRIVE CASE			
BU01-21-322	1				
21-330		VALVE,ONE WAY			
BV01-21-330	1				

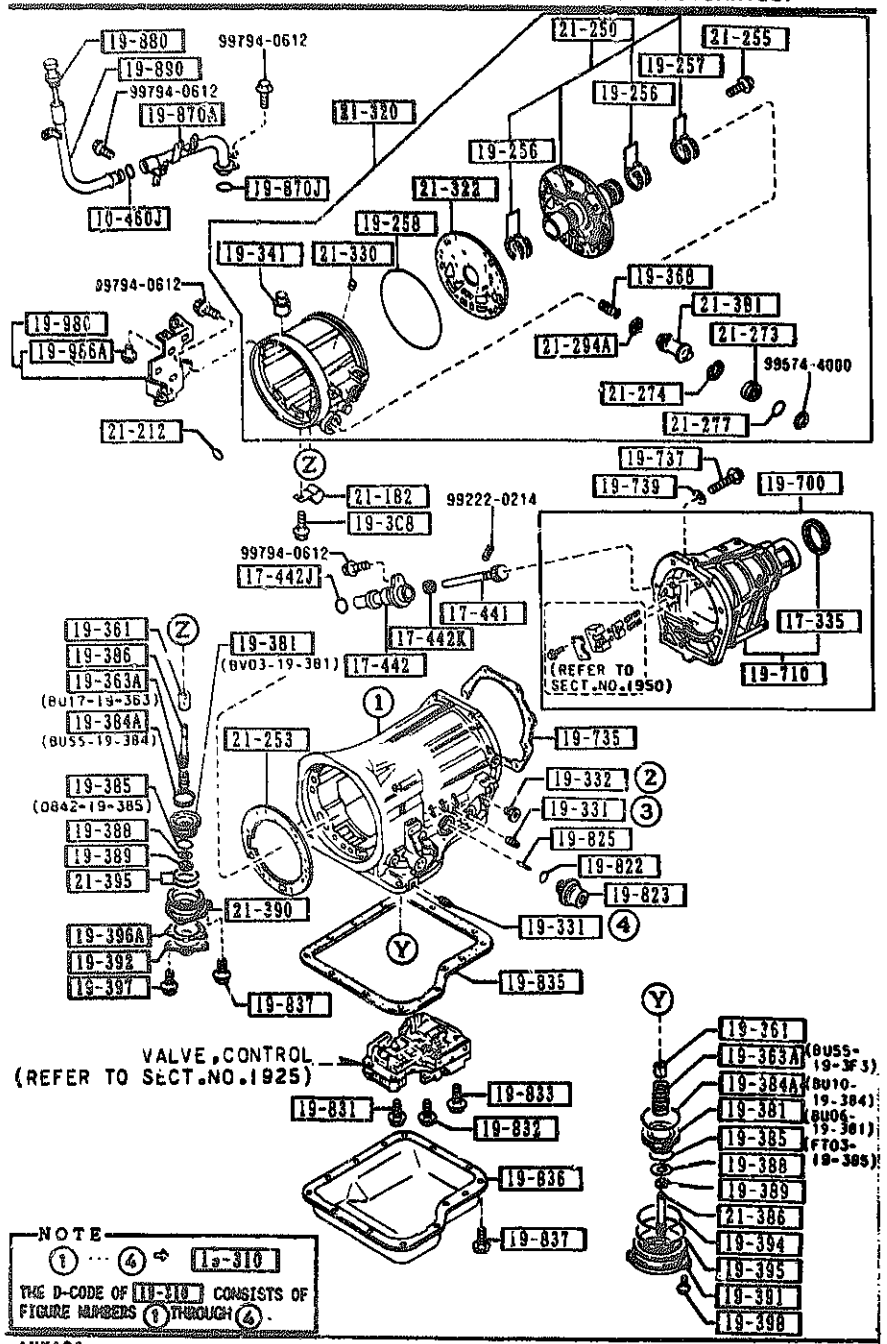

AUNA01

PART NO.	QTY	MODEL/RESTRICTION	MODEL/RESTRICTION	MODEL/RESTRICTION	FROM-TO
21-386		STEM,PISTON BAND			
BU01-21-386	1				
21-390		SERVO,OVER DRIVE			
BU20-21-390	1				
21-395		RING,'O'			
BU01-21-395	2				

1925 -1 CONTROL VALVE (AUTOMATIC)

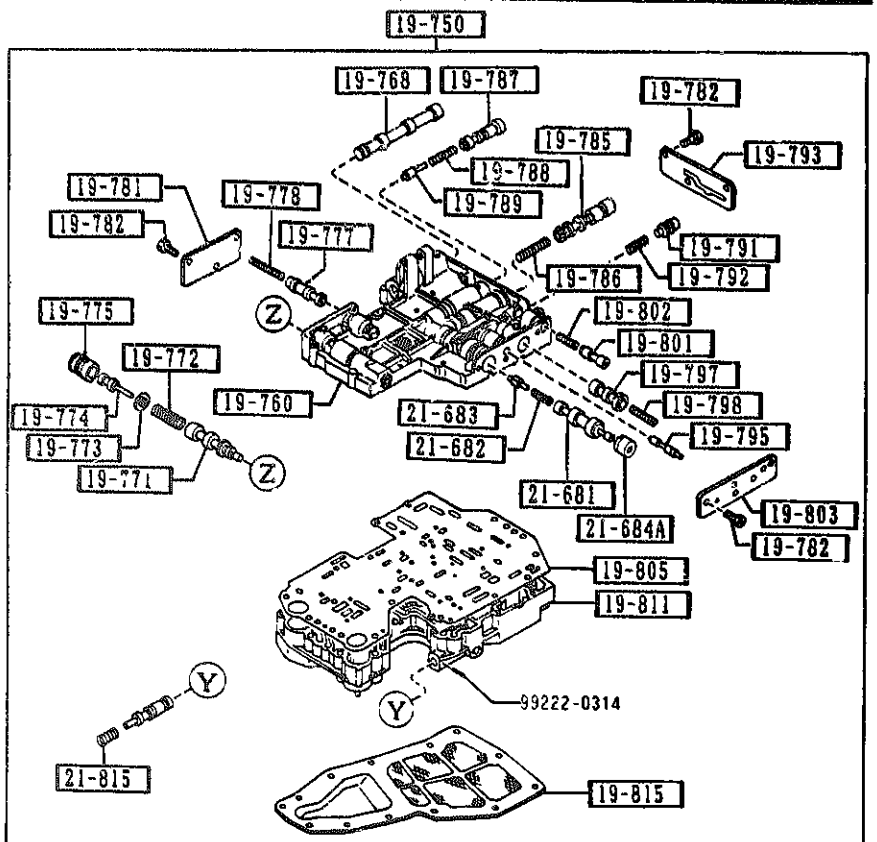

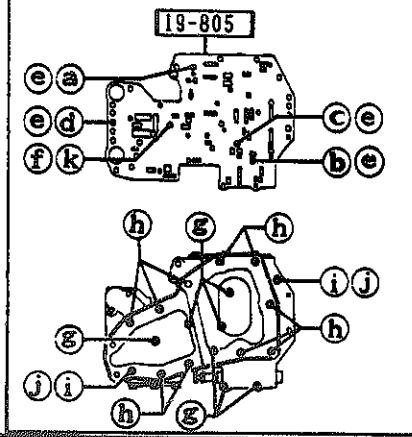

a		19-8A3	D=1.1MM
b		19-881	D=2.0MM
c		19-807	D=1.5MM (8U01-19-807)
d		19-807	D=1.8MM (8U17-19-807)
e		19-808	D=4.77MM, L=15.5MM
f		19-814	D=5.6MM, L=26.8MM
g		19-816	M5, L=25MM
h		19-817	M5, L=40MM
i		19-818	M6, L=57MM
j		19-819	
k		99611-2000	

AUNA01

PART NO.	QTY	MODEL/RESTRICTION	MODEL/RESTRICTION	MODEL/RESTRICTION	FROM-TO
19-750 8U55-19-750	1	VALVE,CONTROL			
19-760 8U55-19-760	1	BODY,CONTROL VALVE-UP			
19-768 0338-19-768	1	VALVE,MANUAL			
19-771 8U01-19-771	1	VALVE,REGULATER			
19-772 0338-19-772	1	SPRING,REGULATER			
19-773 0338-19-773	1	SEAT,REGULATER SPRING			
19-774 8U55-19-774	1	PLUG,REGULATER			
19-775 8U55-19-775	1	SLEEVE,REGULATER PLUG			
19-777 0338-19-777	1	VALVE,SECOND LOCK			
19-778 0338-19-778	1	SPRING,SECOND LOCK			
19-781 1758-19-781	1	PLATE,SIDE'D'			
19-782 0338-19-782	9	SCREW			
19-785 8U55-19-785	1	VALVE,1-2 SHIFT			
19-786 8U55-19-786	1	SPRING,1-2 SHIFT			

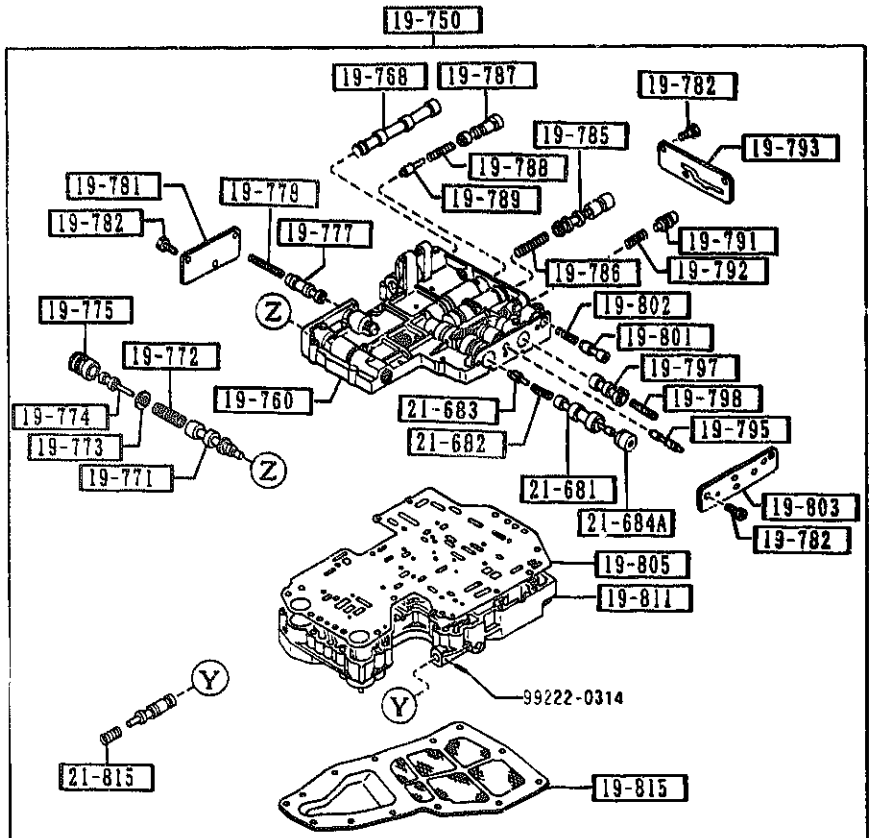

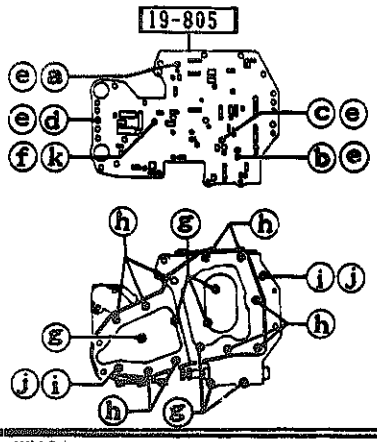

a	D	19-8A3	D=1.1MM
b		19-8B1	D=2.0MM
c		19-807	D=1.5MM (8U01-19-807)
d		19-807	D=1.8MM (8U17-19-867)
e	D	19-808	D=4.77MM, L=15.5MM
f		19-814	D=5.6MM, L=26.8MM
g	L	19-816	M5, L=25MM
h		19-817	M5, L=40MM
i		19-818	M6, L=57MM
j		19-819	
k		99611-2000	

AUNA01

PART NO.	QTY	MODEL/RESTRICTION	MODEL/RESTRICTION	MODEL/RESTRICTION	FROM-TO
19-787		VALVE,2-3 SHIFT			
8U55-19-787	1				
19-788		SPRING,2-3 SHIFT			
FT21-19-788	1				
19-789		PLUG,2-3 SHIFT			
FT13-19-789	1				
19-791		VALVE,MODIFIER			
FT27-19-791A	1				
19-792		SPRING,MODIFIER			
FT37-19-792	1				
19-793		PLATE,SIDE'A'			
0338-19-793A	1				
19-795		VALVE,THROTTLE			
0338-19-795B	1				
19-797		VALVE,THROTTLE BACK-UP			
0338-19-797	1				
19-798		SPRING,THROTTLE BACK-UP			
0338-19-798	1				
19-8A3		VALVE,ORIFICE CHECK			
8V01-19-8A3	1				
19-8B1		VALVE,ORIFICE CHECK			
8V01-19-8B1	1				
19-801		VALVE,DOWN SHIFT			
0338-19-801	1				
19-802		SPRING,DOWN SHIFT			
0338-19-802	1				
19-803		PLATE,SIDE'B'			
8U01-19-803A	1				

1925 CONTROL VALVE (AUTOMATIC)

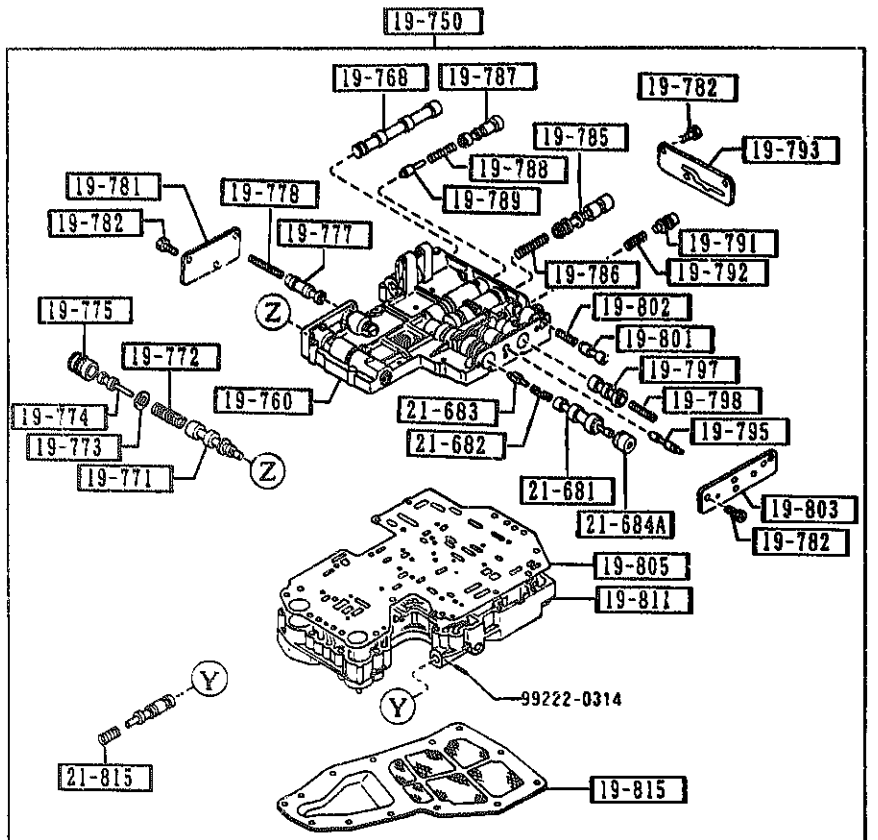

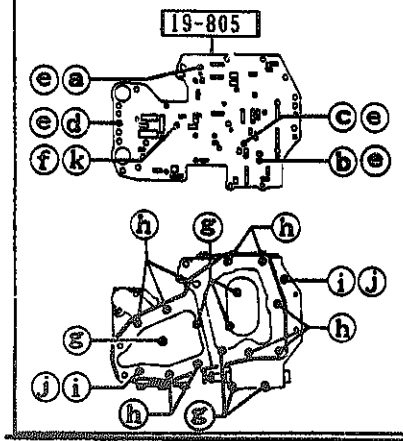

a	D	19-8A3	D=1.1MM
b		19-8B1	D=2.0MM
c		19-807	D=1.5MM (BU01-19-807)
d		19-807	D=1.8MM (BU17-19-807)
e	D	19-808	D=4.77MM,L=15.5MM
f		19-814	D=5.6MM,L=26.8MM
g	L	19-816	M5,L=25
h		19-817	M5,L=40
i		19-818	M6,L=57MM
j		19-819	
k		99611-2000	

AUMA01

PART NO.	QTY	MODEL/RESTRICTION	MODEL/RESTRICTION	MODEL/RESTRICTION	FROM-TO
19-805		PLATE,SEPARATOR			
BU55-19-805	1				
19-807		VALVE,ORIFICE CHECK			
BU01-19-807	1				
BU17-19-807	1				
19-808		SPRING			
0338-19-808	4				
19-811		BODY,VALVE LWR			
BU10-19-811	1				
19-814		SPRIING			
0338-19-814	1				
19-815		STRAINER,OIL			
BU01-19-815	1				
19-816		SCREW			
0338-19-816	7				
19-817		SCREW			
0338-19-817	10				
19-818		BOLT			
0338-19-818	2				
19-819		NUT			
0338-19-819	2				
21-681		VALVE,SHIFT 3-4			
BU35-21-681A	1				
21-682		SPRING,3-4 SHIFT			
BU35-21-682	1				
21-683		PLUG,3-4 SHIFT			
BU03-21-683A	1				

1925 -4 H CONTROL VALVE (AUTOMATIC)

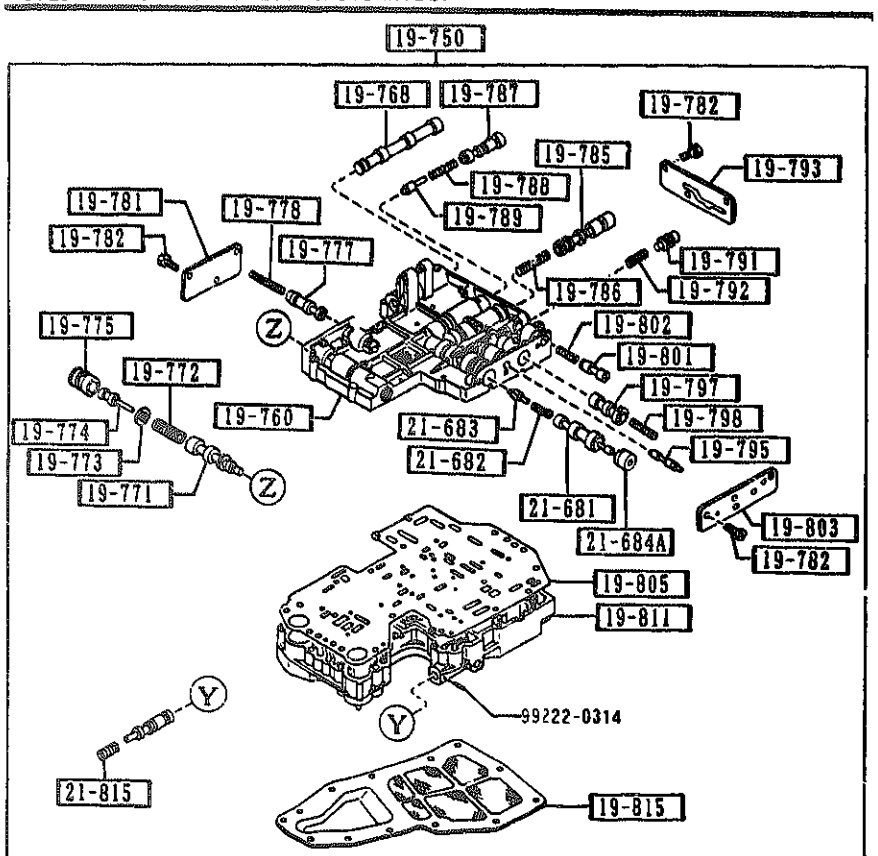

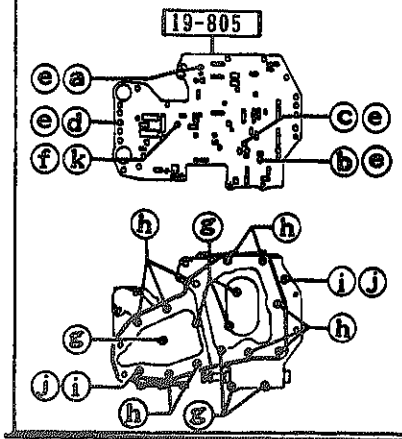

a		19-8A3	D=1.1MM
b		19-8B1	D=2.0MM
c		19-807	D=1.5MM (8U01-19-807)
d		19-807	D=1.8MM (8U17-19-807)
e		19-808	D=4.77MM,L=15.5MM
f		19-814	D=5.6MM,L=26.8MM
g		19-816	M5,L=25MM
h		19-817	M5,L=40MM
i		19-818	M6,L=57MM
j		19-819	
k		99611-2000	

PART NO.	QTY	MODEL/RESTRICTION	MODEL/RESTRICTION	MODEL/RESTRICTION	FROM-TO
21-684A		SLEEVE,3-4 SHIFT			
8U35-21-684	1				
21-815		SPRING,3-2 TIMING			
8U17-21-815	1				

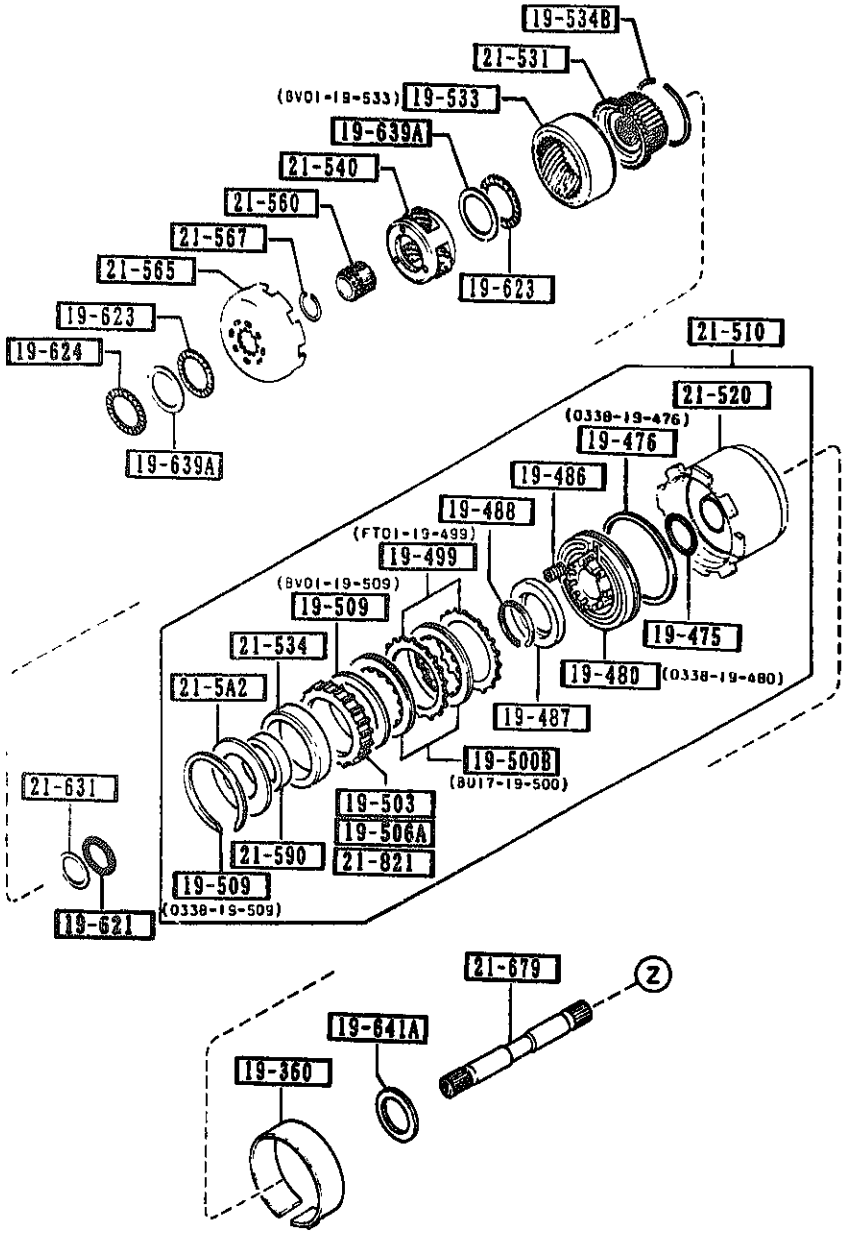

AUNA01 (CONT'D)

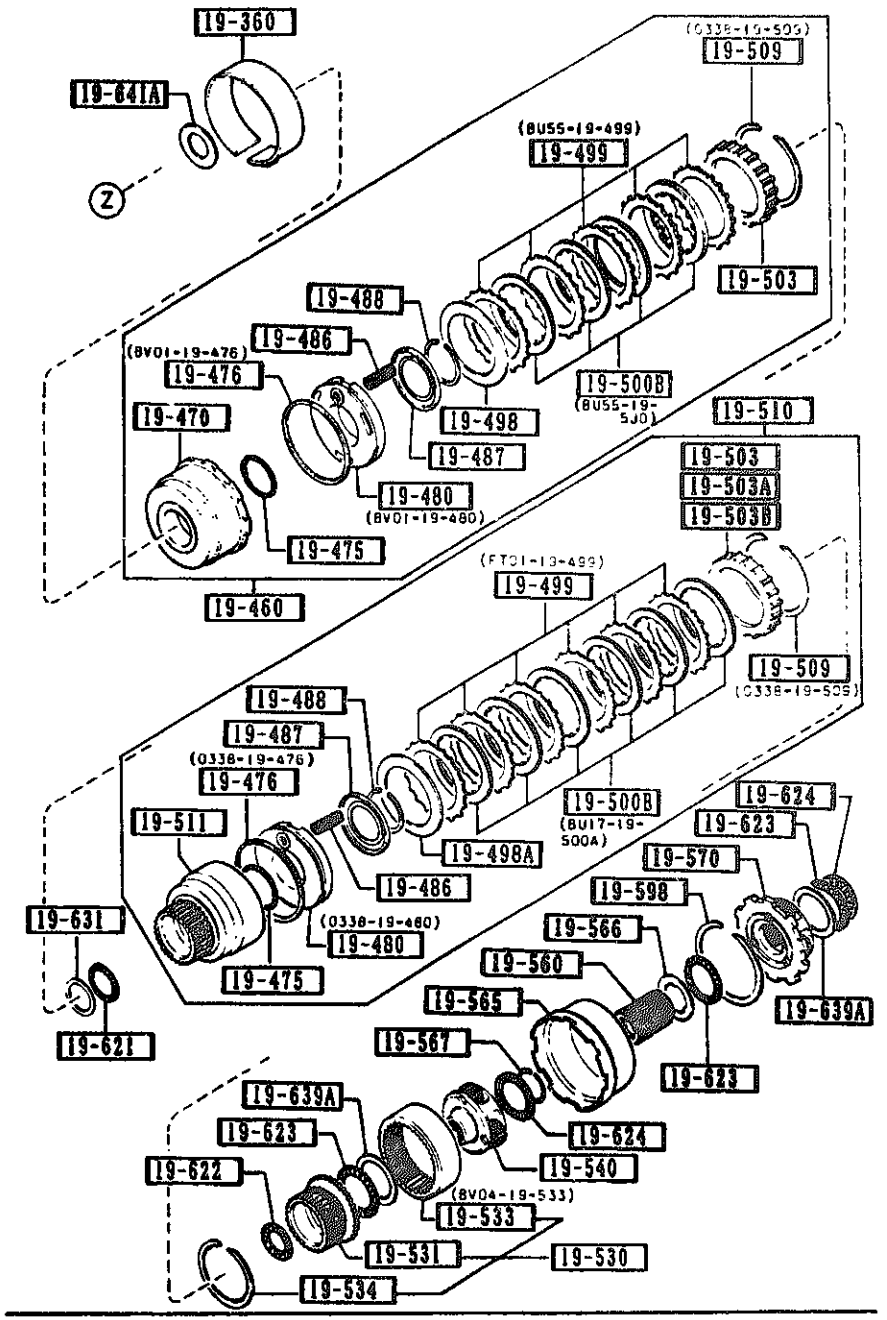

AUNA01

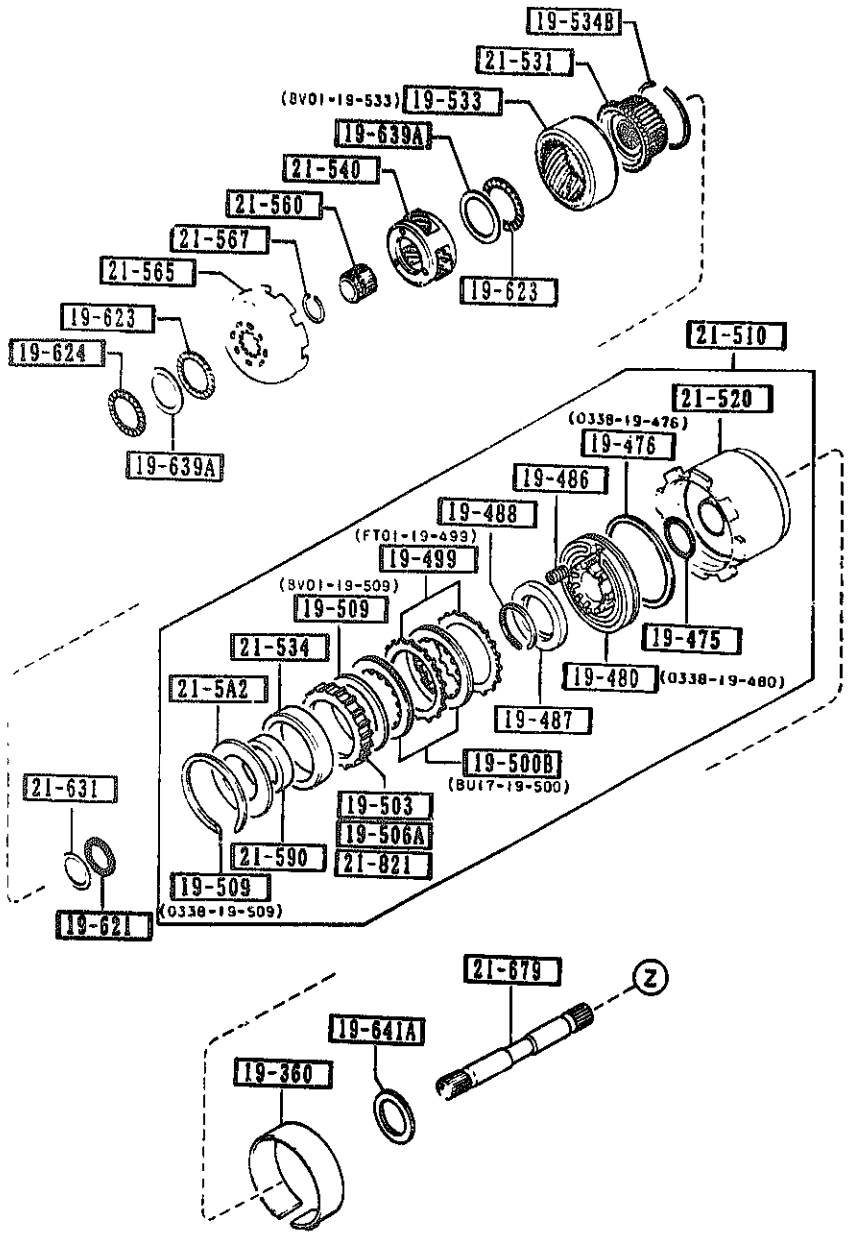

PART NO.	QTY	MODEL/RESTRICTION	MODEL/RESTRICTION	MODEL/RESTRICTION	FROM-TO
19-360		BAND,BRAKE			
0338-19-360B	2				
19-460		CLUTCH,FRONT			
BU55-19-460	1				
19-470		DRUM,CLUTCH			
BU55-19-470	1				
19-475		SEAL,'O'RING			
0338-19-475	3				
19-476		SEAL,LATHE CUT			
8V01-19-476	1				
0338-19-476	2				
19-480		PISTON,CLUTCH			
8V01-19-480	1				
0338-19-480	2				
19-486		SPRING,PISTON RETURN			
0338-19-486	28				
19-487		RETAINER,SPRING			
0338-19-487	3				
19-488		RING,SNAP			
0338-19-488	3				
19-498		PLATE,DISHED			
0338-19-498	1				
19-498A		PLATE,DISHED			
BU17-19-498	1				
19-499		PLATE,DRIVEN			
BU55-19-499	5				
FT01-19-499	8				
19-500B		PLATE,DRIVEN			

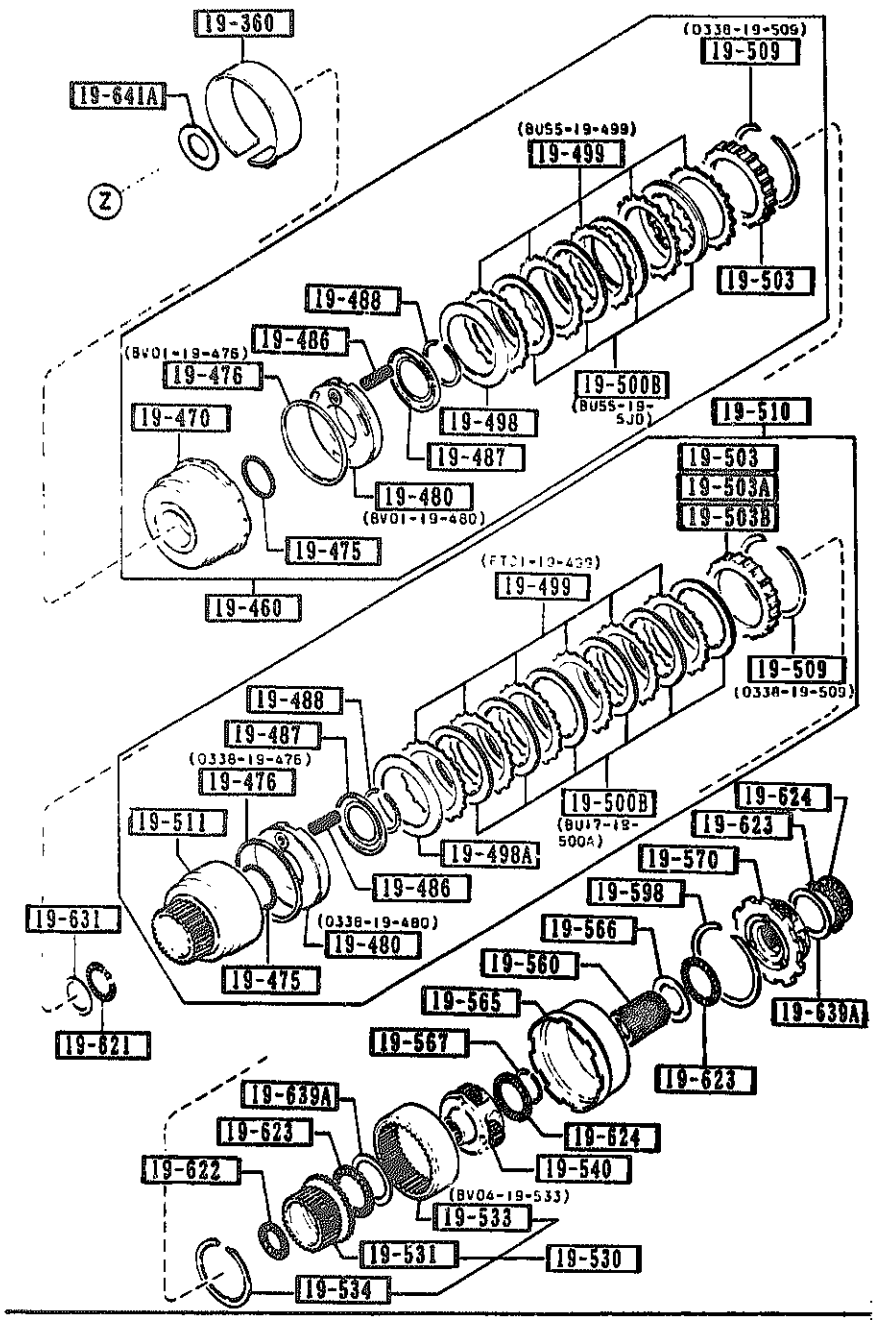

PART NO.	QTY	MODEL/RESTRICTION	MODEL/RESTRICTION	MODEL/RESTRICTION	FROM-TO
CONT'D					
8U55-19-5J0	4				
8U17-19-500	8				
19-503		PLATE,RETAINING			
3959-19-503	1	T=5MM			
3959-19-504	1	T=5.2MM			
3959-19-505	1	T=5.4MM			
3959-19-506	2	T=5.6MM			
3959-19-507	2	T=5.8MM			
3959-19-508	2	T=6MM			
3959-19-509	3	T=6.2MM			
19-503A		PLATE,RETAINING			
1758-19-503	1	T=7.2MM			
1758-19-504	1	T=7.4MM			
1758-19-505	1	T=7.6MM			
19-503B		PLATE,RETAINING			
8V02-19-505	1	T=6.4MM			
8V02-19-506	1	T=6.6MM			
8V02-19-507	1	T=6.8MM			
8V02-19-508	1	T=7MM			
19-506A		PLATE,RETAINING			
8U05-21-528	1	T=7MM			
19-509		RING,SNAP			
8V01-19-509	1				
0338-19-509	3				

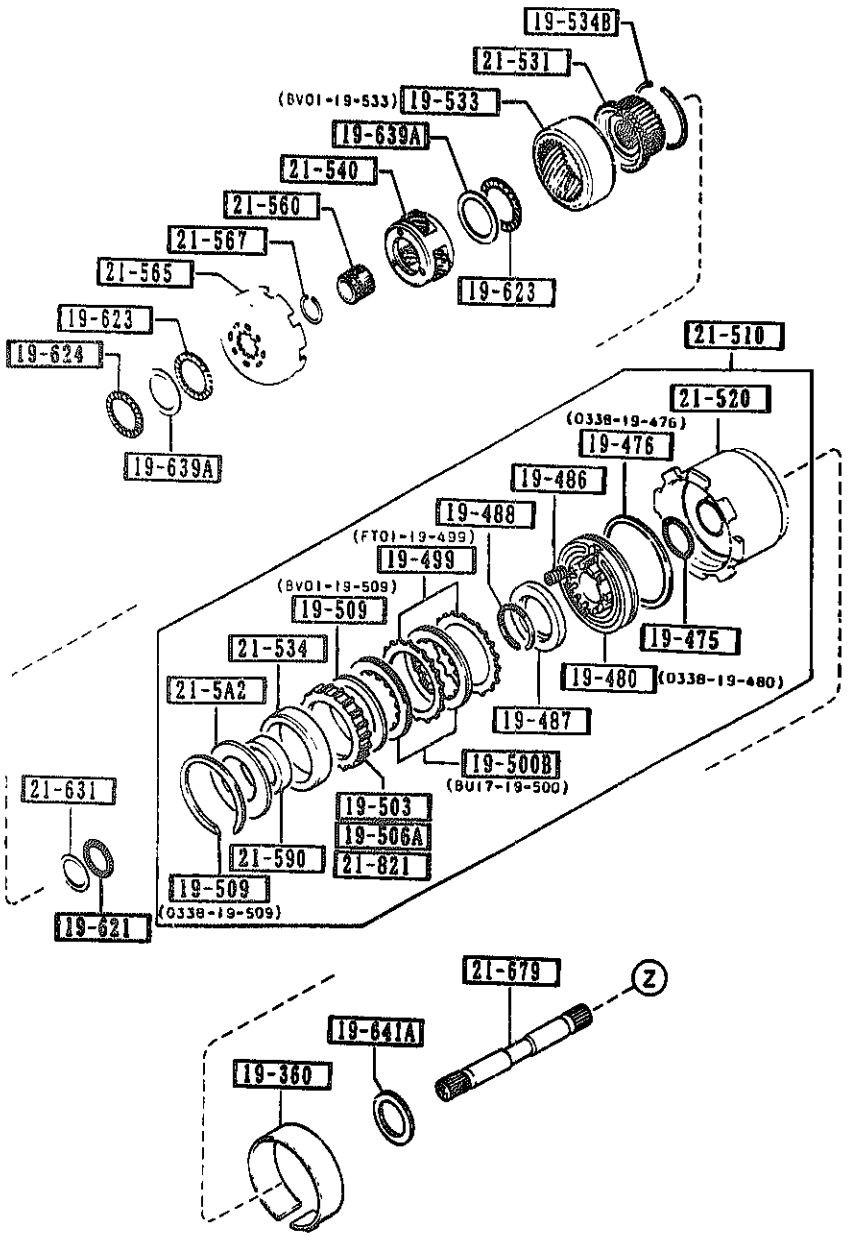

PART NO.	QTY	MODEL/RESTRICTION	MODEL/RESTRICTION	MODEL/RESTRICTION	FROM-TO
19-510		CLUTCH,REAR			
BV01-19-510	1				
19-511		DRUM,REAR CLUTCH			
1758-19-511	1				
19-530		HUB,REAR CLUTCH			
BV04-19-530	1				
19-531		HUB,REAR CLUTCH			
BV04-19-531	1				
19-533		GEAR,INTERNAL			
BV01-19-533	1				
BV04-19-533	1				
19-534		RING,SNAP			
0338-19-534	1				
19-534B		RING,SNAP			
BU03-19-534	1				
19-540		CARRIER,FRONT			
BV01-19-540A	1				
19-560		GEAR,SUN			
BV04-19-560	1				
19-565		SHELL,CONNECTING			
BV04-19-565	1				
19-566		RACE,SHELL BEARING			
BV04-19-566	1				
19-567		RING,SNAP			
EU02-19-567	1				
19-570		CARRIER,REAR			
BV01-19-570A	1				

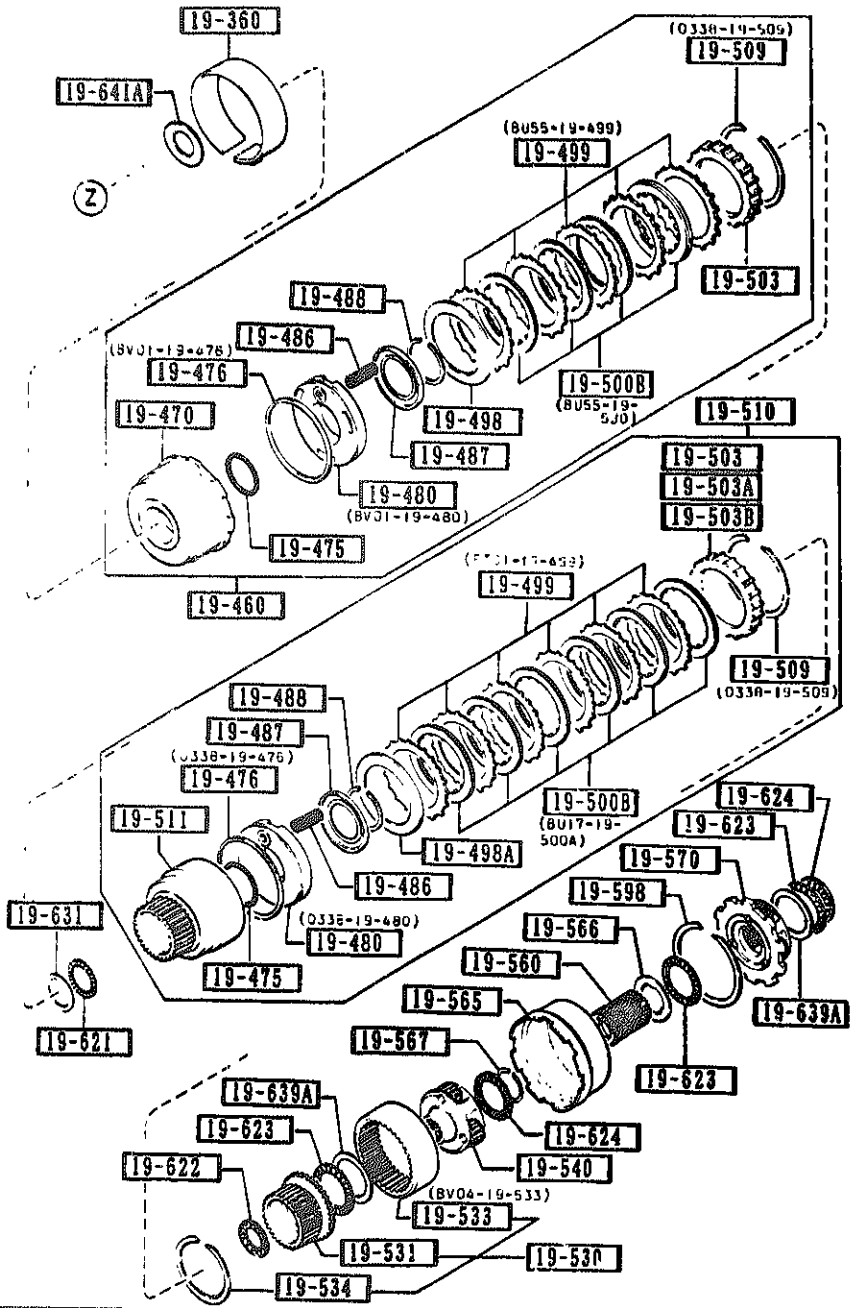

PART NO.	QTY	MODEL/RESTRICTION	MODEL/RESTRICTION	MODEL/RESTRICTION	FROM-TO
19-598		RING,SNAP			
0338-19-598	1				
19-621		BEARING,NEEDLE			
0338-19-621	2				
19-622		BEARING,NEEDLE			
FT01-19-622	1				
19-623		BEARING,NEEDLE			
0338-19-623 A (0338-19-623A)	5				-0401
0338-19-623A	5				0401-
19-624		BEARING,NEEDLE			
0338-19-624	3				
19-631		RACE,BRG.PUMP COVER			
0338-19-631	1	T=1.2MM			
0338-19-632	1	T=1.4MM			
0338-19-633	1	T=1.6MM			
0338-19-634	1	T=1.8MM			
0338-19-635	1	T=2MM			
0338-19-636	1	T=2.2MM			
19-639A		RACE,BEARING			
0338-19-639	4				
19-641A		WASHER			
0338-19-641	2	T=1.9MM			
0338-19-642	2	T=2.1MM			
0338-19-643	2	T=2.3MM			
0338-19-644	2	T=2.5MM			

0401 NA35**-146561

1-M 8

1930 CLUTCHES & PLANETARY GEARS (AUTOMATIC) (1/2)

(THIS ILLUSTRATION CONSISTS OF 2 PAGES)

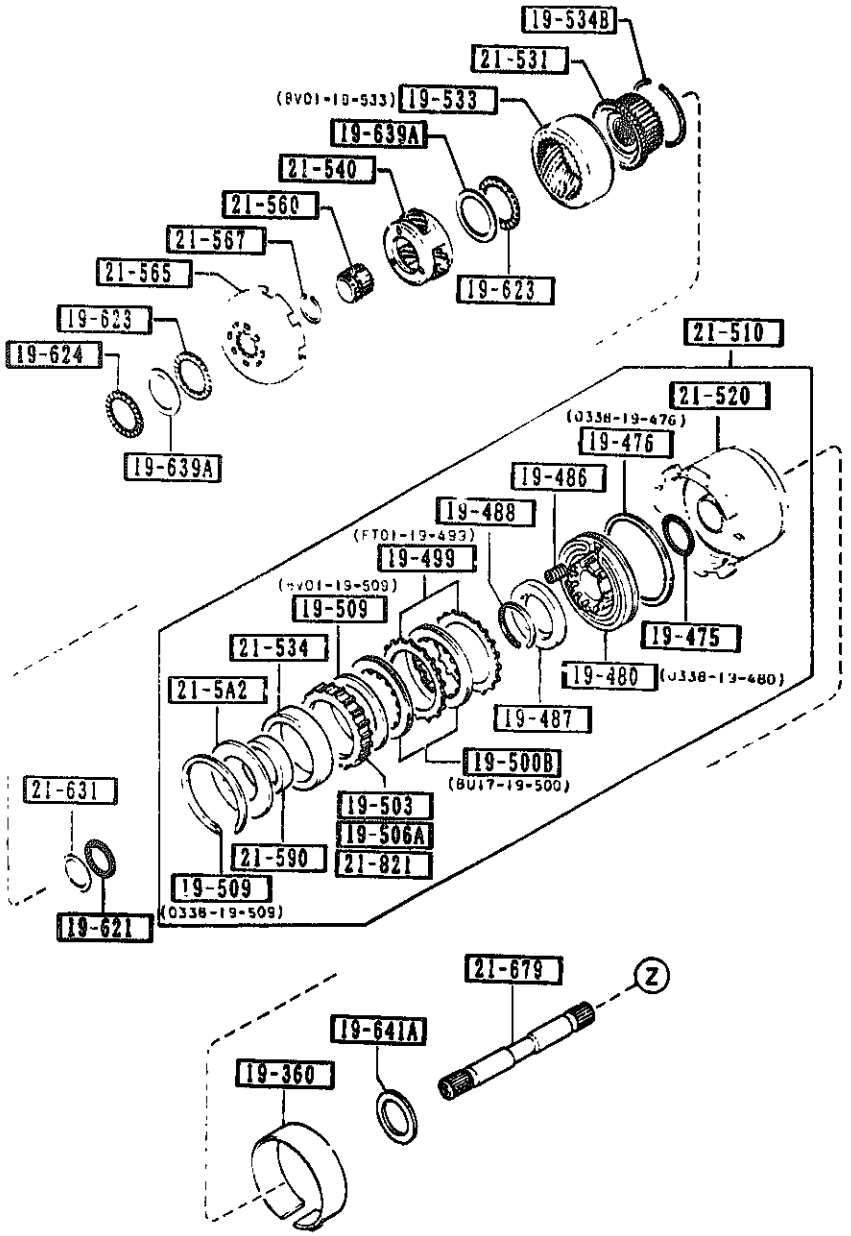

PART NO.	QTY	MODEL/RESTRICTION	MODEL/RESTRICTION	MODEL/RESTRICTION	FROM TO
CONT'D					
0338-19-645	2	T=2.7MM			
0338-19-646	2	T=1.5MM			
0338-19-647	2	T=1.7MM			
0338-19-648	2	T=1.3MM			
21-5A2		RECE,SIDE-ONE WAY CLUTCH			
8V01-21-5A2	1	T=0.6MM			
8V01-21-5A3	1	T=0.8MM			
8V01-21-5A4	1	T=1MM			
8V01-21-5A5	1	T=1.2MM			
8V01-21-535	1	T=0.4MM			
21-510		CLUTCH,DIRECT			
8U55-21-510	1				
21-520		DRUM,DIRECT			
8U55-21-5A0	1				
21-531		HUB,OVER DRIVE CLUTCH			
8V01-21-536	1				
21-534		RACE,OUTER-ONE WAY CLUTCH			
8V01-21-534	1				
21-540		CARRIER,OVER DRIVE			
8U03-21-540	1				
21-560		GEAR,OVER DRIVE			
8U03-21-560	1				
21-565		CONNECTING,SHELL			
8U03-21-565	1				
21-567		RING,SNAP			

SECTION NAME INDEX (ENGINE)

LO.NO	SEC.NO	SECTION NAME	LO.NO	SEC.NO	SECTION NAME	LO.NO	SEC.NO	SECTION NAME
1-C03	1000	SHORT ENGINE & GASKET SETS						
1-D03	1010	CYLINDER HEAD & COVER						
1-G03	1030	CYLINDER BLOCK						
1-I03	1040	OIL PAN & TIMING COVER						
1-K03	1100	PISTON,CRANKSHAFT & FLYWHEEL						
1-N03	1200	VALVE SYSTEM						
1-D04	1300	INLET MANIFOLD						
1-E04	1310	EXHAUST MANIFOLD						
1-F04	1320	FUEL SYSTEM						
1-H04	1325	FUEL DISTRIBUTOR						
1-I04	1330	AIR CLEANER						
1-K04	1364	THROTTLE BODY						
1-L04	1370	EMISSION CONTROL SYSTEM (INLET SIDE)						
1-M04	1399	CAP & HOSE CLIP (INLET & EXHAUST SIDE)						
1-N04	1400	OIL PUMP & FILTER						
1-C05	1500	COOLING SYSTEM						
1-G05	1580	BRACKET,PULLEY & BELT						
1-C06	1600	CLUTCH DISC & COVER (MANUAL)						
1-D06	1700	TRANSMISSION CASE (MANUAL)						
1-E06	1710	TRANSMISSION GEARS(MANUAL)						
1-J06	1720	CHANGE CONTROL SYSTEM (MANUAL)						
1-M06	1800	ENGINE ELECTRICAL SYSTEM						
1-C07	1830	ALTERNATOR						
1-E07	1840	STARTER						
1-G07	1850	BATTERY						
1-H07	1910	TORQUE CONVERTER,OIL PUMP & PIPINGS (AUTOMATIC)						
1-K07	1920	TRANSMISSION CASE & MAIN CONTROL SYSTEM (AUTOMATIC)						
1-E08	1925	CONTROL VALVE (AUTOMATIC)						
1-I08	1930	CLUTCHES & PLANETARY GEARS (AUTOMATIC)						
1-D09	1940	GOVERNOR, LOW & REVERSE PISTON (AUTOMATIC)						
1-G09	1950	MANUAL LINKAGE SYSTEM (AUTOMATIC)						
1-I09	1960	GASKET & SEAL KIT (AUTOMATIC)						



CATLOG-NO= AUNA01-07

DATE. 1992-02

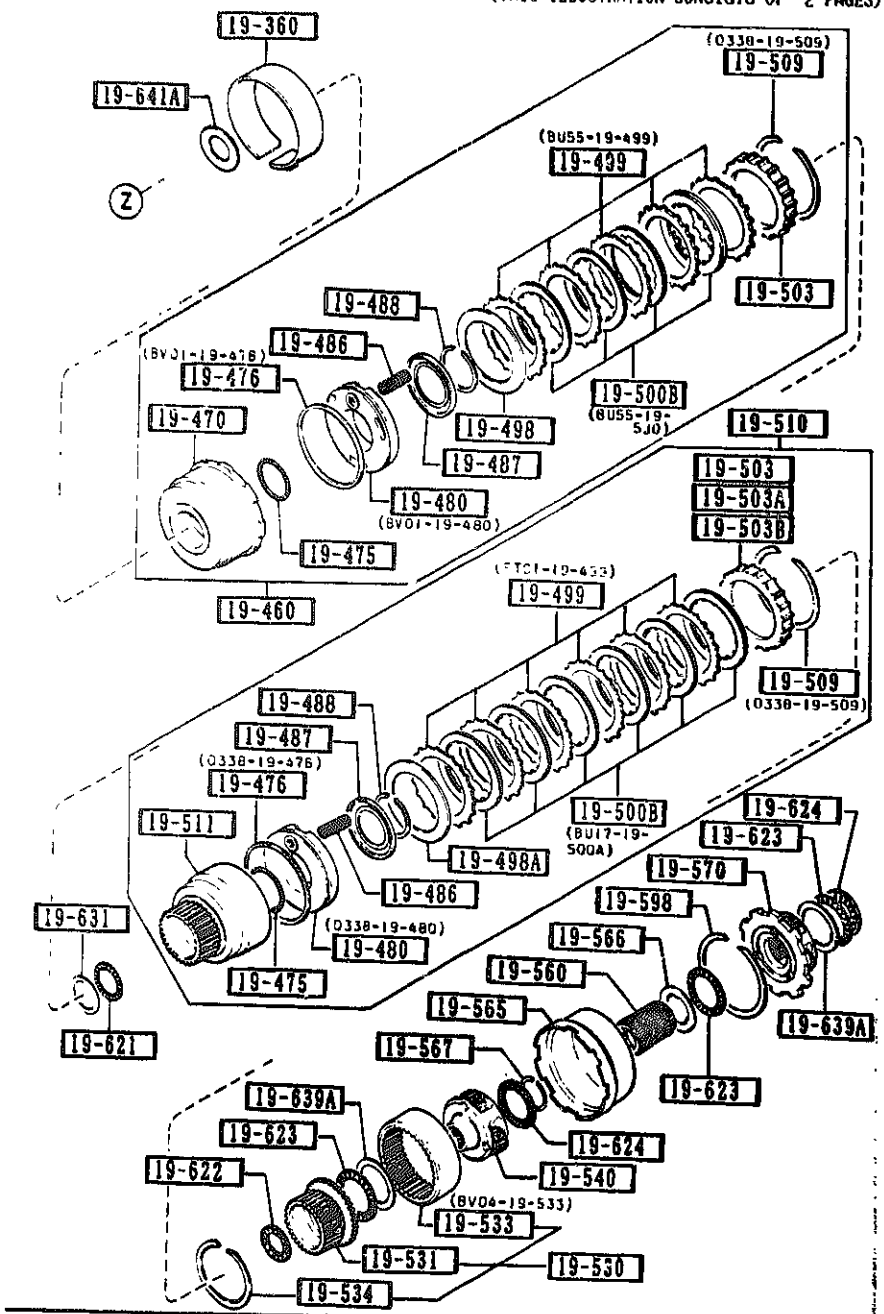

AUNA01

1930 -6 M CLUTCHES & PLANETARY GEARS (AUTOMATIC)

PART NO.	QTY	MODEL/RESTRICTION	MODEL/RESTRICTION	MODEL/RESTRICTION	FROM TO
CONT'D					
BU03-21-567	1				
21-590		CLUTCH,ONE WAY			
BV01-21-533	1				
21-631		RACE,BRG.HUB CLUTCH			
BU01-21-631	1	L=1.2MM			
BU01-21-632	1	L=1.4MM			
BU01-21-633	1	L=1.6MM			
BU01-21-634	1	L=1.8MM			
BU01-21-635	1	L=2MM			
BU01-21-636	1	L=2.2MM			
21-679		SHAFT,INTERMEDIATE			
BU01-21-679	1				
21-821		PLATE,RETAINING			
BV01-21-821A	1				

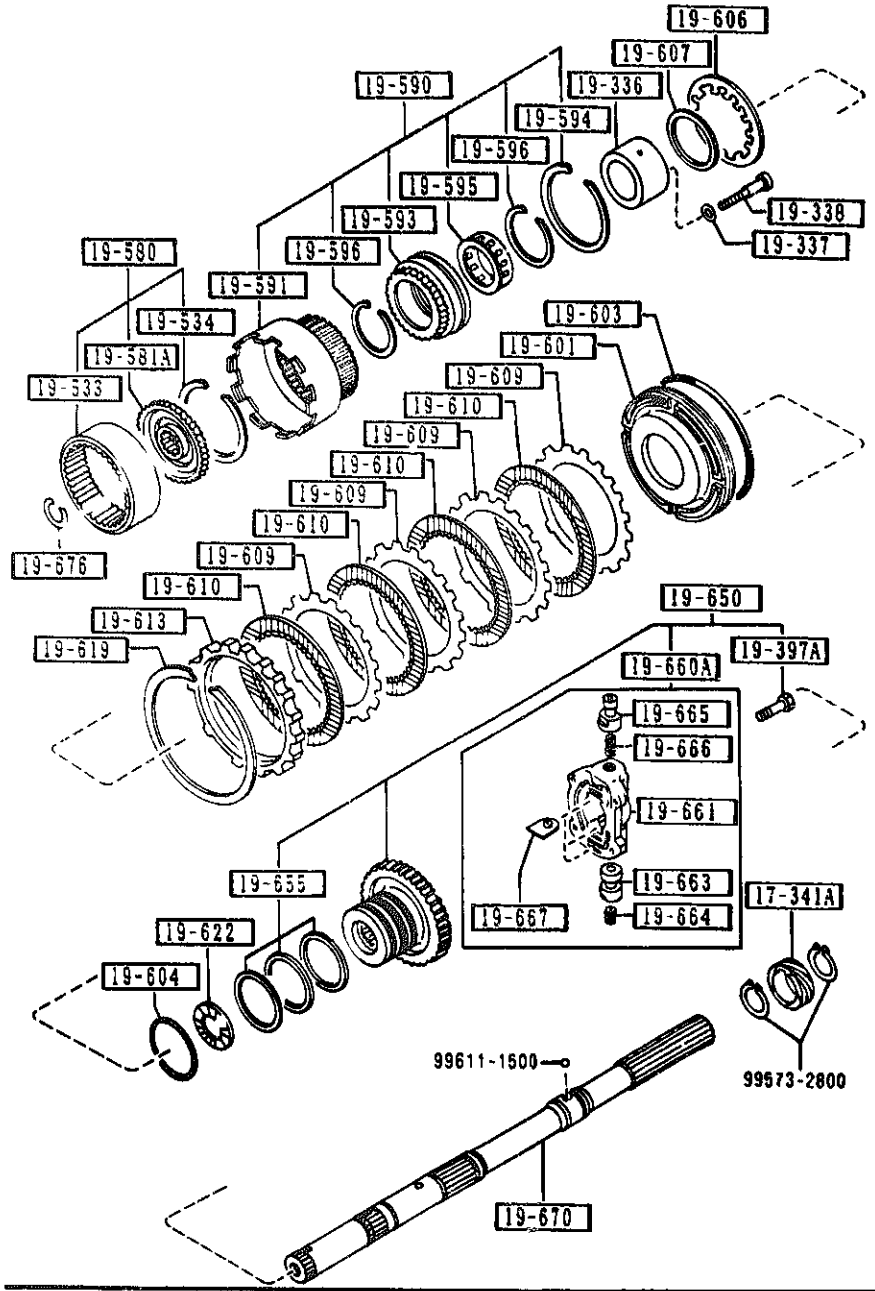

AUNA01

1940 -1 GOVERNOR, LOW & REVERSE PISTON (AUTOMATIC)

PART NO.	QTY	MODEL/RESTRICTION	MODEL/RESTRICTION	MODEL/RESTRICTION	FROM TO
17-341A 1281-17-341	1	GEAR,SPEEDO.DRIVE			
19-336 0338-19-336	1	RACE,INNER			
19-337 0338-19-337	8	WASHER,PLAIN			
19-338 0338-19-338	8	BOLT			
19-397A 0338-19-397	4	BOLT			
19-533 BV04-19-533	1	GEAR,INTERNAL			
19-534 0338-19-534	1	RING,SNAP			
19-580 BV01-19-5K0	1	FLANGE			
19-581A BV04-19-581	1	HUB,DRIVE			
19-590 0338-19-590	1	DRUM,CONNECTING			
19-591 0338-19-591	1	DRUM,CONNECTING			
19-593 0338-19-593	1	RACE,OUTER			
19-594 0338-19-594	1	RING,SNAP			
19-595 0338-19-595	1	CLUTCH,ONE WAY			

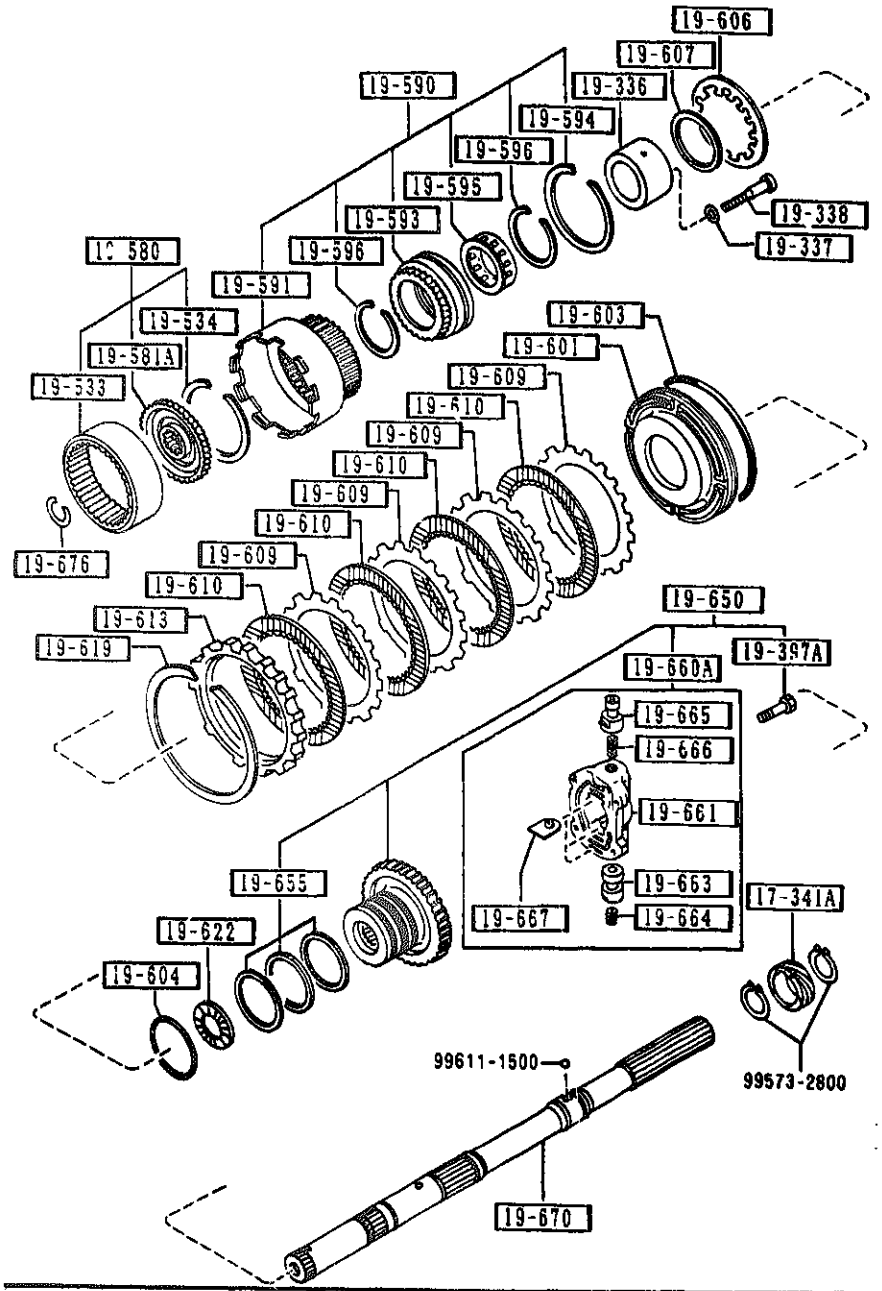

AUNA01

PART NO.	QTY	MODEL/RESTRICTION	MODEL/RESTRICTION	MODEL/RESTRICTION	FROM TO
19-596		RING, SNAP			
0338-19-596	2				
19-601		PISTON 'OW & REVERSE			
BT08-19-600	1				
19-603		SEAL, PISTON			
0338-19-603	1				
19-604		SEAL, 'O' RING			
0338-19-604	1				
19-606		SPRING, PISTON			
0338-19-606	1				
19-607		RING, SNAP			
0338-19-607	1				
19-609		PLATE, DRIVEN			
0338-19-609	4				
19-610		PLATE, DRIVEN			
8U17-19-610	4				
19-613		PLATE, RETAINING			
1756-19-613	1	T=7.8MM			
1758-19-614	1	T=8MM			
1758-19-615	1	T=8.2MM			
1758-19-616	1	T=8.4MM			
1758-19-617	1	T=8.6MM			
1758-19-618	1	T=8.8MM			
19-619		RING, SNAP			
0338-19-619	1				
19-622		BEARING, NEEDLE			

CAT. AUNA01-07

1992-02

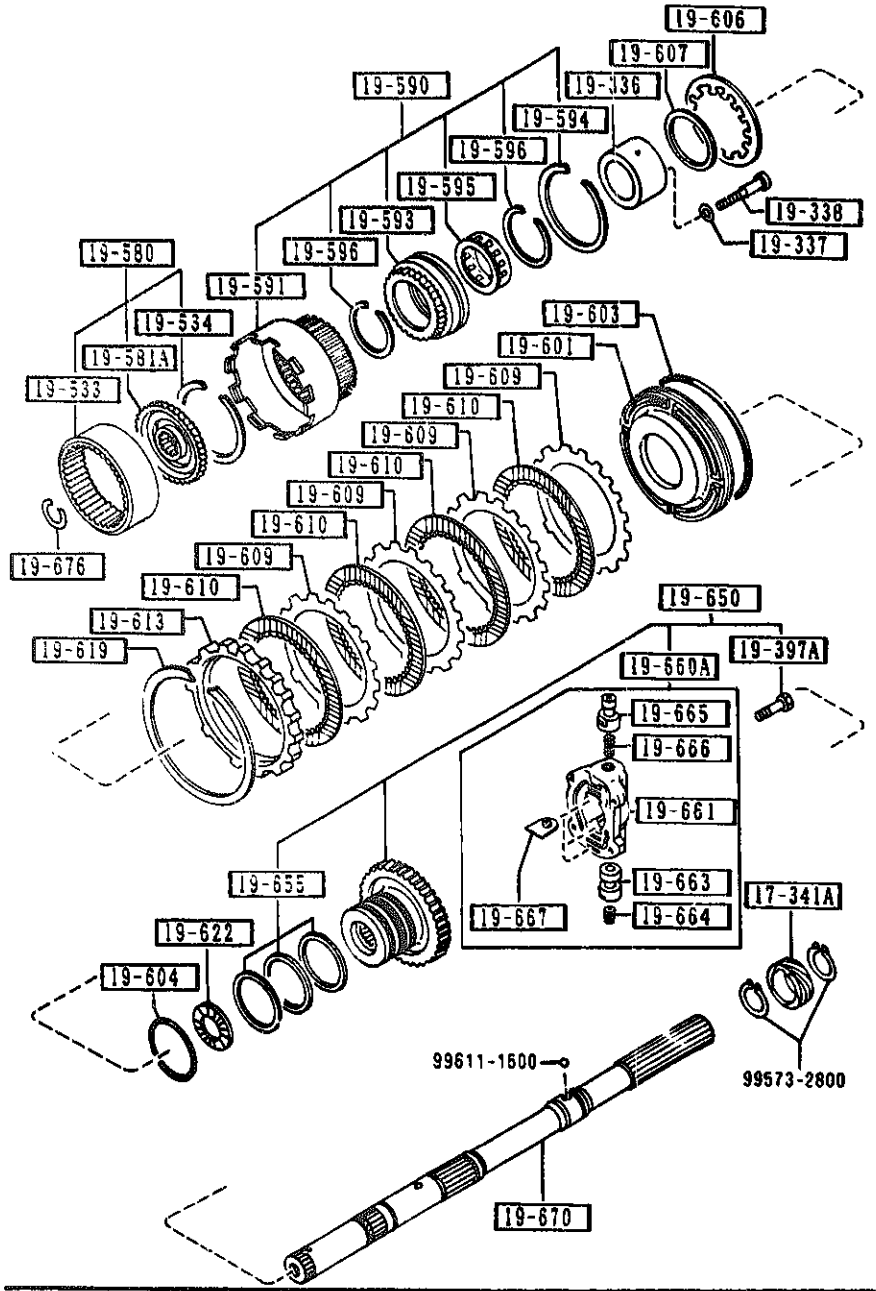

AUNA01

PART NO.	QTY	MODEL/RESTRICTION	MODEL/RESTRICTION	MODEL/RESTRICTION	FROM-TO
CONT'D					
FTQ1-19-622	1				
19-650		DISTRIBUTOR,OIL			
BU55-19-650	1				
19-655		RING,SEAL			
0338-19-655	3				
19-660A		VALVE,GOVERNOR			
BU55-19-660	1				
19-661		BODY			
BU55-19-661	1				
19-663		VALVE			
0338-19-663	1				
19-664		SPRING			
0338-19-664	1				
19-665		VALVE			
BU55-19-665	1				
19-666		SPRING,GOVERNOR			
BU55-19-666	1				
19-667		PLATE,RETAINER			
0338-19-667	3				
19-670		SHAFT			
BU55-19-670	1				
19-676		RING			
0338-19-676	1				

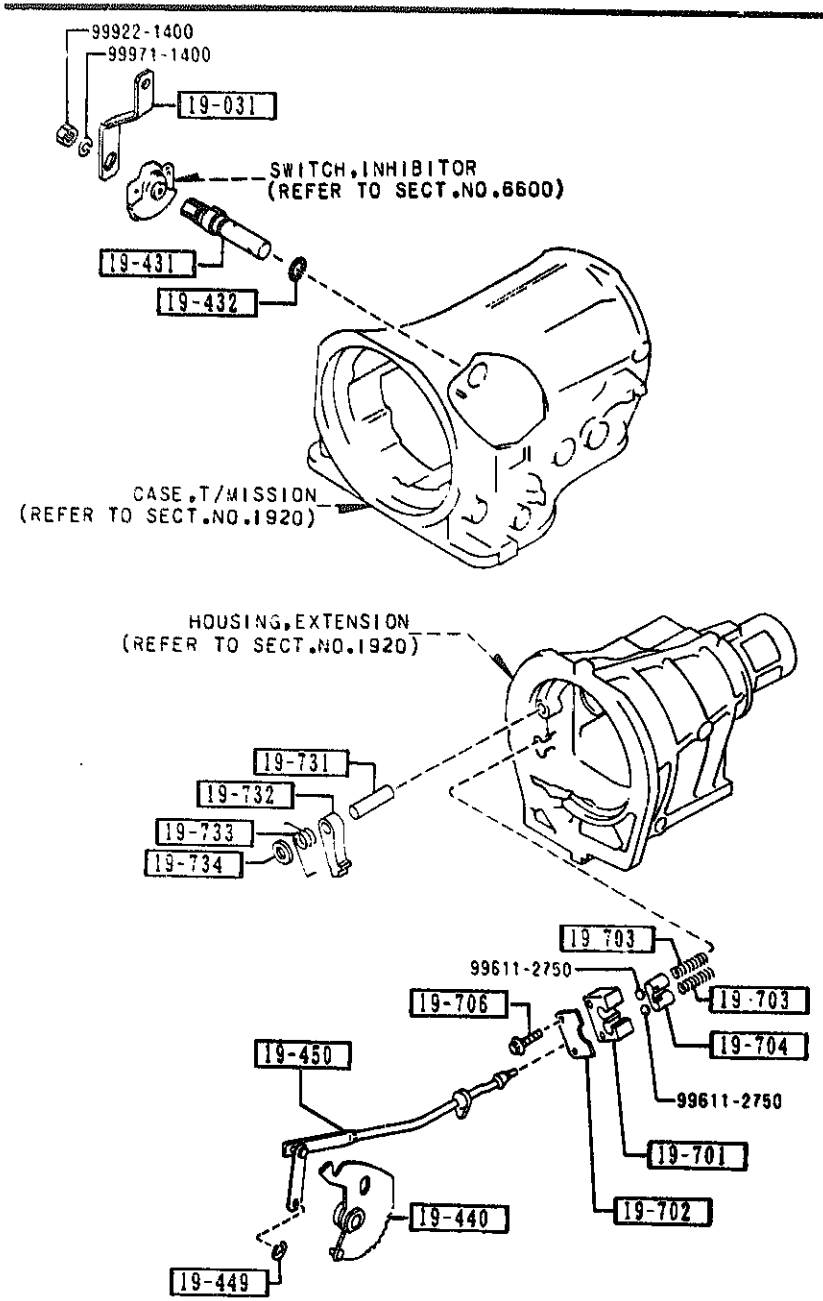

PART NO.	QTY	MODEL/RESTRICTION	MODEL/RESTRICTION	MODEL/RESTRICTION	FROM-TO
19-031 BU55-19-031	1	LEVER,SELECT			
19-431 BU67-19-431	1	SHAFT,MANUAL			
19-432 0338-19-432	1	RING,'O'			
19-440 BU55-19-440	1	PLATE,MANUAL			
19-449 0338-19-449	1	RING,SNAP			
19-450 BU17-19-450	1	ROD,PARKING			
19-701 0338-19-701A	1	SUPPORTER,ACTUATOR			
19-702 0338-19-702A	1	PLATE,RETAINING			
19-703 0338-19-703	2	SPRING,BALL PARK			
19-704 0338-19-704	1	RETAINER			
19-706 0338-19-706	1	BOLT			
19-731 0338-19-731	1	SHAFT,PARKING PAWL			
19-732 BU17-19-732	1	PAWL,PARKING			
19-733 0338-19-733C	1	SPRING,PAWL RETURN			

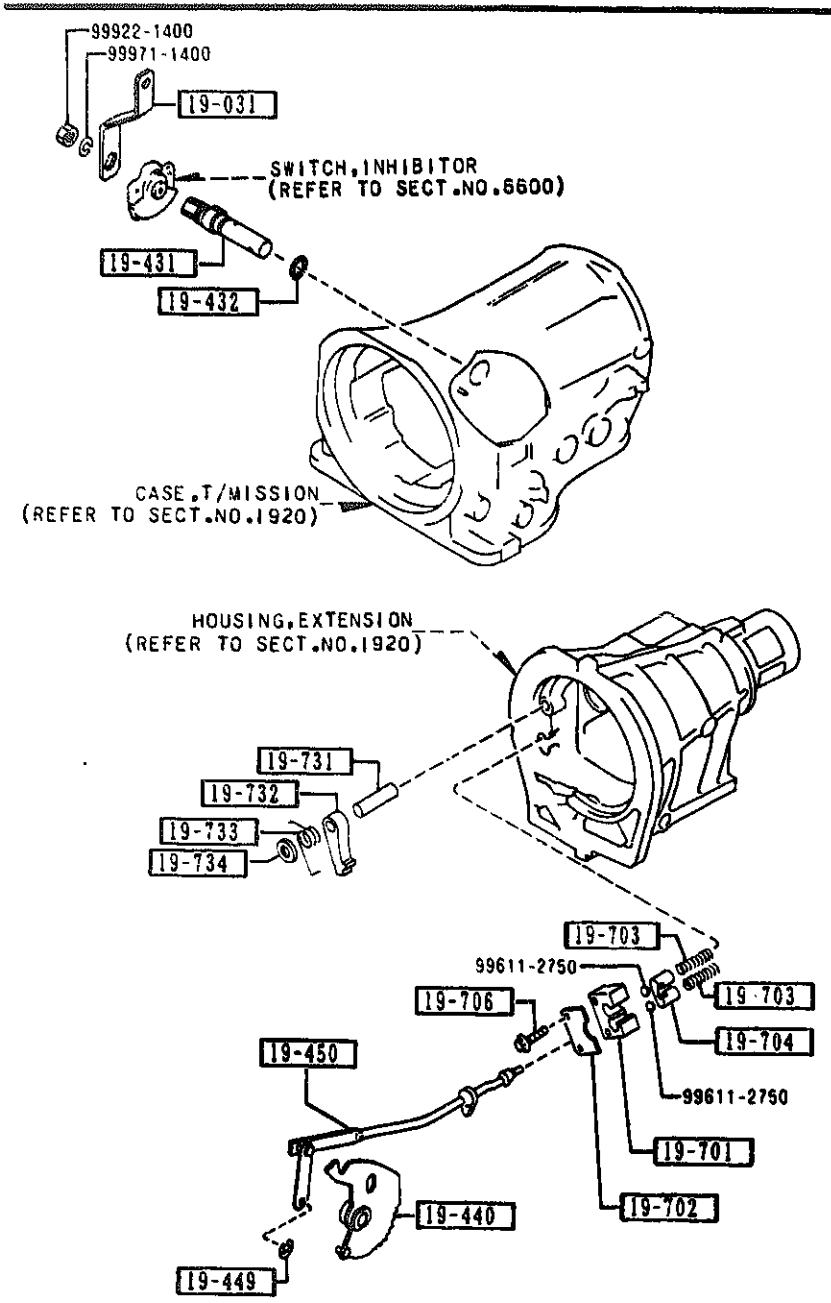

PART NO.	QTY	MODEL/RESTRICTION	MODEL/RESTRICTION	MODEL/RESTRICTION	FROM-TO
19-734		SPACER,DOWEL			
0338-19-734A	1				

1960 -1 M GASKET & SEAL KIT (AUTOMATIC)

22-900

1-SEAL,OIL.....(1)
2-GASKET,OIL PUMP.....(1)
3-SEAL,OIL.....(1)
4-SEAL,CUT RING.....(2)
5-SEAL,PISTON.....(1)
6-SEAL,PISTON.....(1)
7-SEAL,LATHE CUT.....(1)
8-RING,"O".....(1)
9-RING,"O".....(1)
10-RING,"O".....(1)
11-SEAL,"O"RING.....(3)
12-SEAL,LAHTE CUT.....(3)
13-SEAL,PISTON.....(1)
14-SEAL,"O"RING.....(1)
15-GASKET,EXTENSION.....(1)
16-SEAL,"O"RING.....(2)
17-GASKET,OIL PAN.....(1)
18-RING,"O".....(1)
19-GASKET,DRUM SUPPORT....(1)
20-SEAL,"O"RING.....(1)
21-SEAL,"O"RING.....(1)
22-RING,"O".....(1)
23-RING,"O".....(1)
24-RING,"O".....(1)
25-GASKET,O/DRIVE CASE....(1)
26-RING,"O".....(1)
27-RING,"O".....(1)

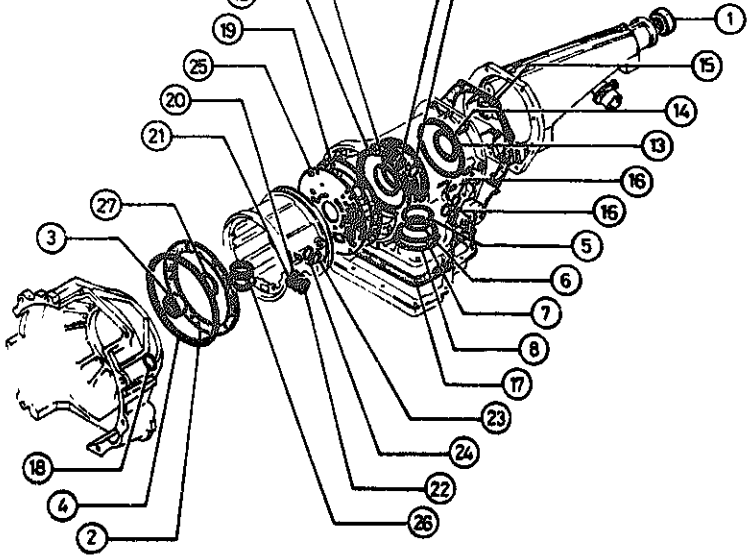

PART NO.	QTY	MODEL/RESTRICTION	MODEL/RESTRICTION	MODEL/RESTRICTION	FROM-TO
22-900		GASKET & SEAL KIT			
BU01-99-190A	1	ASBESTOS			