SECTION NAME INDEX (BODY)

LO.NO	SEC.NO	SECTION NAME
2-C05	0900	KEY SETS
2-E05	5000	FRONT BUMPER
2-H05	5010	REAR BUMPER
2-J05	5030	WINDOW MOULDING & COWL GRILLES
2-L05	5100	HEAD LAMPS
2-M05	5103	HEAD LAMP RETRACTORS
2-D06	5105	FRONT COMBINATION LAMPS
2-F06	5110	REAR COMBINATION LAMPS
2-I06	5120	LICENSE LAMPS
2-J06	5180	REAR FINISHER
2-L06	5230	BONNET
2-N06	5260	TRUNK LID
2-D07	5310	BODY PANELS (FRONT)
2-E07	5320	BODY PANELS (FENDER & WHEEL APRON)
2-H07	5330	BODY PANELS (DASH & COWL PANEL)
2-I07	5340	BODY PANELS (SIDE)
2-C08	5370	BODY PANELS (FLOOR)
2-F08	5380	FLOOR ATTACHMENTS (HOLE COVERS)
2-G08	5390	FLOOR ATTACHMENTS
2-C09	5500	DASHBOARD EQUIPMENTS
2-E09	5520	METER HOOD
2-F09	5530	SPEEDOMETER CABLE
2-G09	5540	METER COMPONENTS
2-I09	5560	DASHBOARD & RELATED PARTS
2-L09	5570	CONSOLE
2-C10	5580	VENTILATOR
2-D10	5700	SEATS
2-K10	5790	SEAT BELTS
2-L10	5800	FRONT DOORS
2-C11	5830	FRONT DOOR MECHANISMS
2-F11	5840	FRONT DOOR TRIMS & RELATED PARTS
2-C12	6100	HEATER
2-D12	6110	HEATER UNIT COMPONENTS
2-E12	6115	HEATER CONTROLS COMPONENTS
2-F12	6120	HEATER BLOWER COMPONENTS
2-G12	6130	AIR CONDITIONER
2-K12	6135	O RING SET,PIPING
[illegible]	6140	COMPRESSOR COMPONENTS (AIR CONDITIONER)
2-N12	6150	COOLING UNIT (AIR CONDITIONER)
2-C13	6300	WINDOW GLASSES
2-D13	6330	SUNROOF
2-M13	6600	SWITCHES & RELAYS (ENGINE)
2-D14	6610	DASHBOARD SWITCHES
2-E14	6611	COMBINATION SWITCH
2-F14	6630	RELAYS & UNIT (BODY)
2-G14	6635	DOOR SWITCH & HORNS
2-H14	6640	AUTO CRUISE CONTROL SYSTEM
2-I14	6680	AUDIO SYSTEMS (RADIO & TAPE DECK)
2-K14	6682	AUDIO SYSTEMS (ANTENNA & SPEAKER)
2-L14	6700	WIRING HARNESSES(FRONT & REAR)
2-N14	6701	WIRING HARNESSES(ENGINE & T/MISSION)
2-D15	6702	WIRING HARNESSES(DASHBOARD)
2-E15	6703	WIRING HARNESSES(DOOR,FLOOR/CEILING)
2-F15	6704	WIRING HARNESS CLAMPS
2-I15	6720	WINDSHIELD WASHER
2-K15	6730	WINDSHIELD WIPERS
2-M15	6740	WIPER MOTOR COMPONENTS(FRONT)
2-N15	6820	FRONT HEADER TRIM & PILLAR TRIMS
2-C16	6840	TRIMS & SCUFF PLATES
2-E16	6860	FLOOR MATS & PADS
2-G16	6870	SERVICE TOOLS
2-H16	6900	VISORS,ASSIST HANDLES & MIRRORS
2-J16	6930	CAUTION PLATES & LABELS
2-L16	7250	QUARTER WINDOW & TRIMS
3-C03	7900	ACCESSORIES

CATLOG-NO= AUNA01-07

DATE. 1992-02

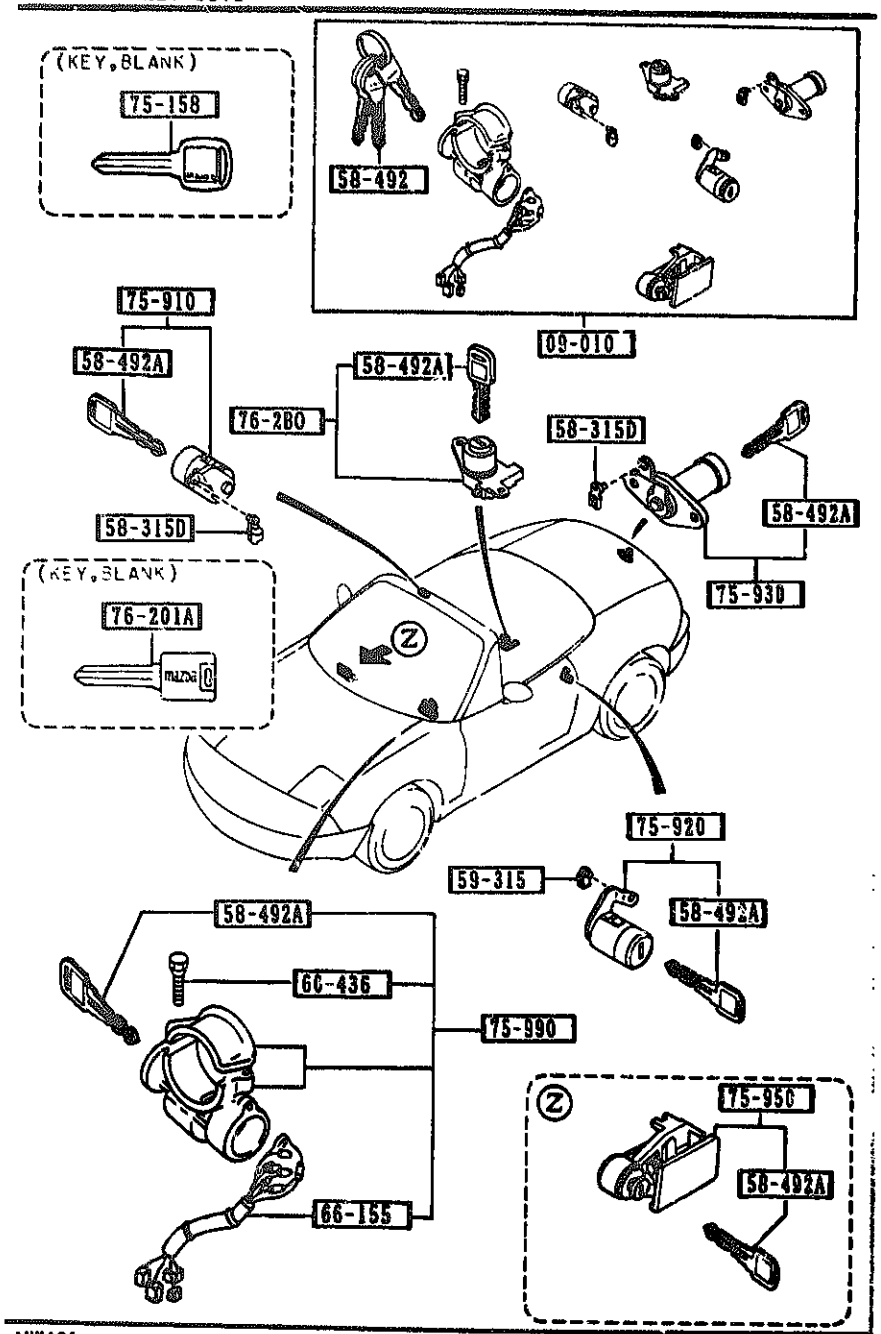

PART NO.	QTY	MODEL/RESTRICTION	MODEL/RESTRICTION	MODEL/RESTRICTION	FROM-TO
09-010		KEY SET			
NA01-09-010B AN(NA01-09-010C)	1				-0201
00		NA0 BLACK			
NA03-09-010 AN(NA03-09-010A)	1				-0201
00		NA0 BLACK			
NA01-09-010C	1	(MT)			0201-
00		NA0 NA1 BLACK			
NA03-09-010A	1	(AT)			0201-
00		NA0 NA1 BLACK			
58-315D		CLIP (R)			
G030-58-315	2				
58-492		KEY,PRIMARY			
BR75-58-492	2	KEY NO.IS REQUIRED			
58-492A		KEY,SECONDARY			
LA02-58-493	1	KEY NO.IS REQUIRED			
59-315		CLIP			
G030-59-315	1				
60-436		BOLT,SET			
H043-66-154	2				
66-155		SWITCH,IGNITION			
D001-66-151	1				
75-158		KEY,BLANK			
LA02-76-202	1				
75-910		KEY SUB SET(R),DOOR			
NA01-76-210	A				
75-920		KEY SUB SET(L),DOOR			
NA01-76-220	1				

0201 NA35MM-137180

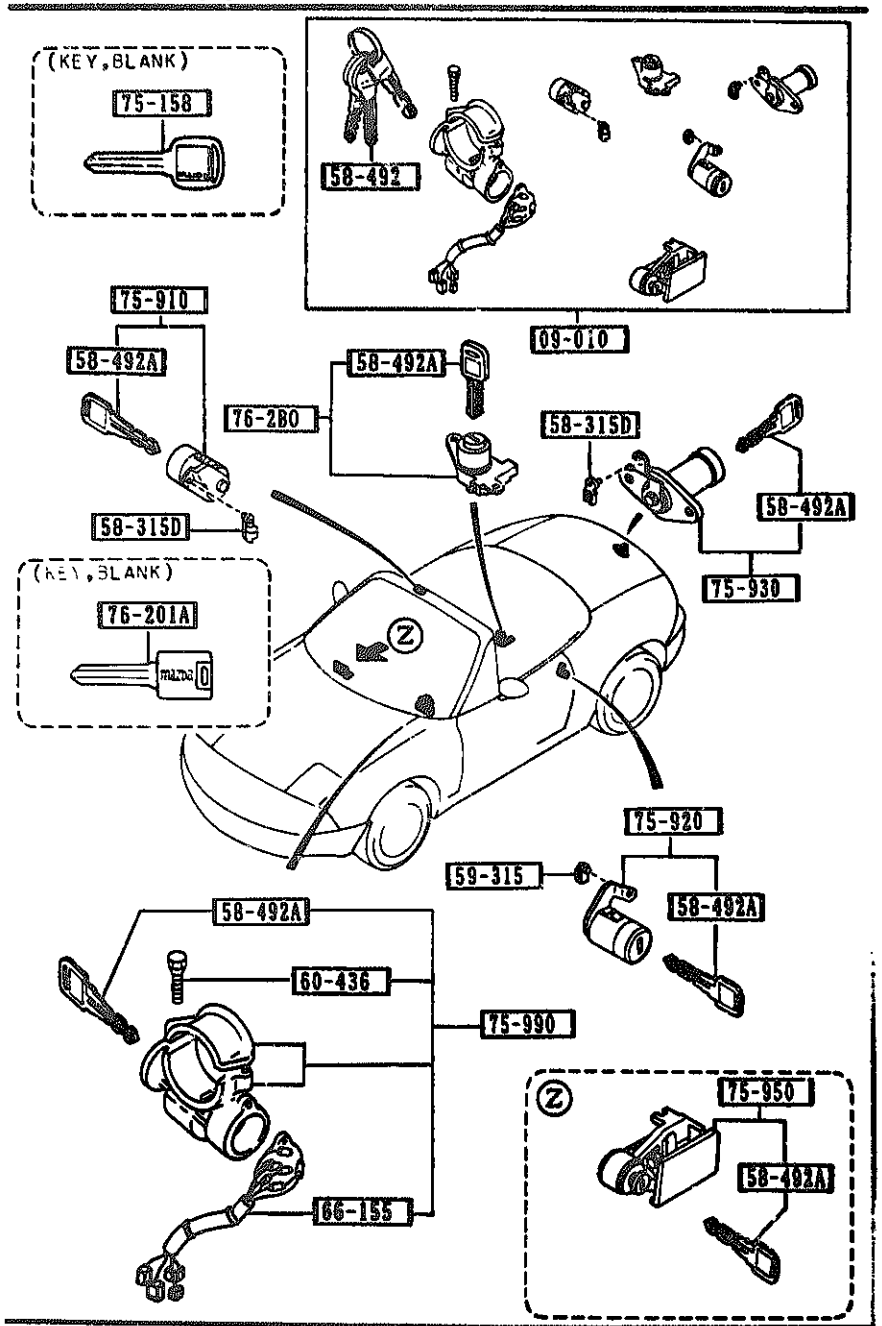

PART NO.	QTY	MODEL/RESTRICTION	MODEL/RESTRICTION	MODEL/RESTRICTION	FROM-TO
75-930		KEY SUB SET,TRUNK			
NA01-76-230	1				
75-950		KEY SUB SET,GLOVE			
NA01-76-250	1				
00		NA0 BLACK			
75-990		KEY SUB SET,ST.LOCK			
NA01-76-290 AN(NA01-76-290A)	1				-0201
NA03-76-290 AN(NA03-76-290A)	1				-0201
NA01-76-290A	1	(MT)			0201-
NA03-76-290A	1	(AT)			0201-
76-280		KEY SUB SET,CONSOL			
NA01-76-280	1				
00		NA0 NAI BLACK			
76-201A		KEY,BLANK-PRIMARY			
BR75-76-201	1				-9C01
BS45-76-201	1				9C01-

9C01 NA35MM-130310
0201 NA35MM-137180

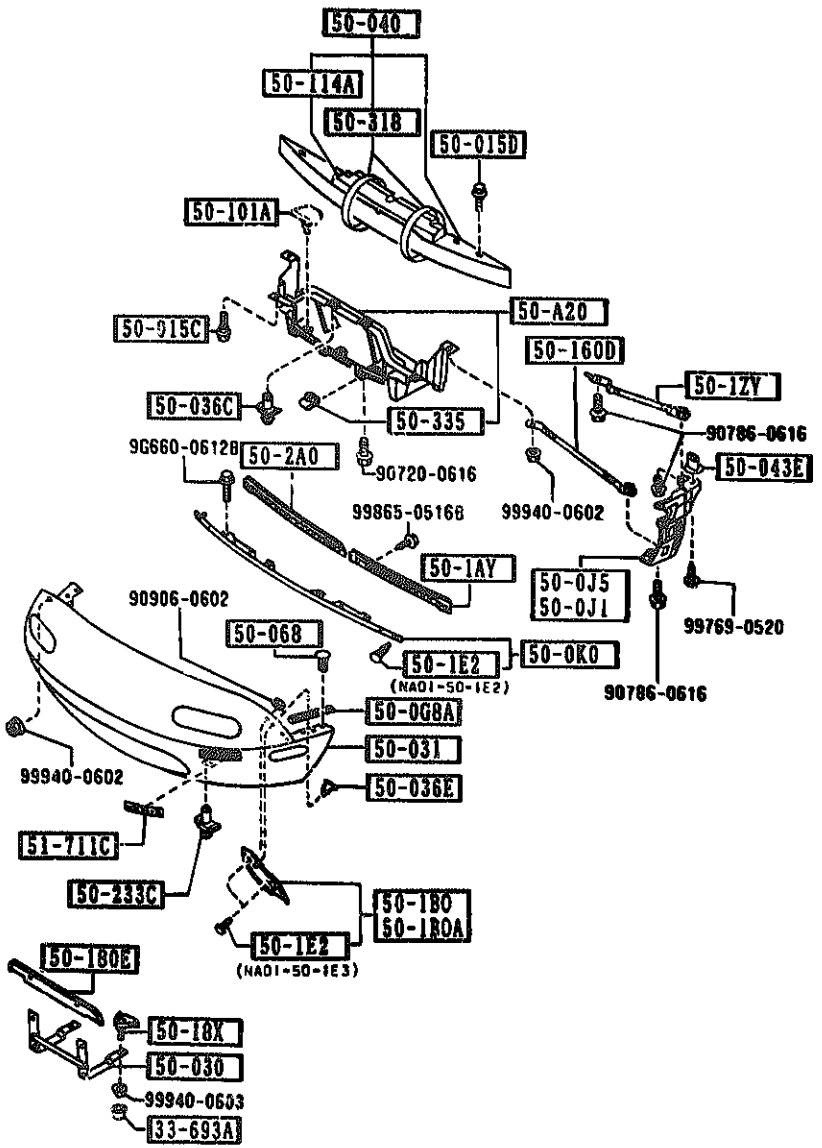

AUNA01

PART NO.	QTY	MODEL/RESTRICTION	MODEL/RESTRICTION	MODEL/RESTRICTION	FROM-TO
33-693A		CAP,BLEEDER SCREW			
0259-33-693	2				
50-A20		GUIDE,AIR			
NA01-50-A20A	1				
50-C0RA		SEAL,RUBBER-FRONT BUMPER			
NA01-50-009	2				
50-0J1		RETAINER(R),FORNT BUMPER			
NA01-50-0J1	1	(AY)			
50-0J5		RETAINER(L),FRONT BUMPER			
NA01-50-0J5	1				
50-0K0		RETAINER,FASCIA			
NA01-50-0K0B	1				
50-015C		BOLT			
FB01-50-332	2				
50-015D		BOLT			
NA01-50-0Z2	8				
50-030		HOLDER,NO. PLATE			
NA01-50-180 A (NA01-50-180A)	1				-9A01
NA01-50-180A	1				9A01-
50-031		BUMPER,FRONT			
NAY1-50-030	1				
50-036C		FASTENER			
BF67-50-033	2				
50-036E		CLIP			
KA01-50-102	6				
50-040		REINFORCEMENT,BUMPER			
NA01-50-070	1	(W/AIR BAG)			
NA07-50-070	1	(W/O AIR BAG)			0701-

9A01 NA35##-122908
0701 NA35##-200041

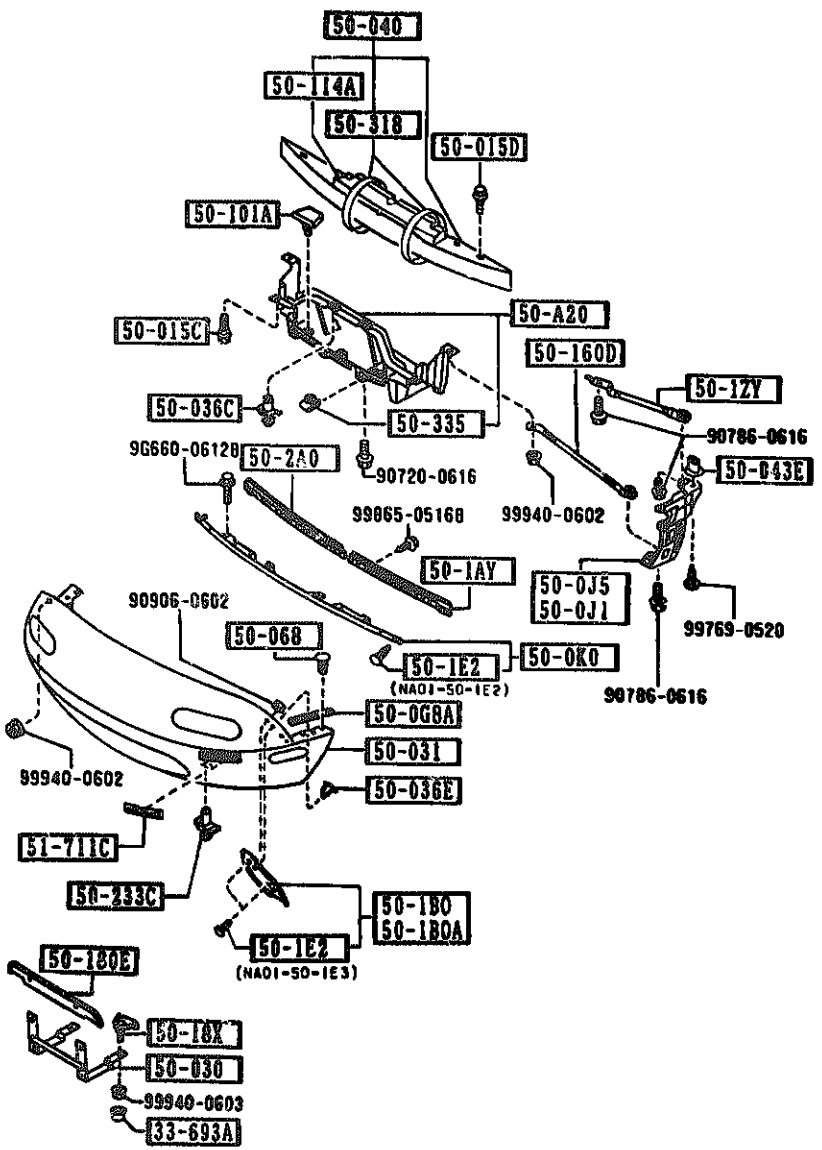

PART NO.	QTY	MODEL/RESTRICTION	MODEL/RESTRICTION	MODEL/RESTRICTION	FROM-TO
50-043E		SLIDE'A',BUMPER			
B092-50-032	2				
50-068		CLIP			
NA01-50-068	6				
50-1AY		PLATE,SET NO.1			
NA01-50-1AYA	1				-9912
NA01-50-1AYB	1				9912-
50-1B0		PLATE NO.2(R),SET-F. BUMPER			
NA01-50-1B0	1				
50-1B0A		PLATE NO.2(L),SET-F. BUMPER			
NA01-50-1C0	1				
50-1E2		BOLT			
NA01-50-1E2	2				
NA01-50-1E3	4				
50-1ZY		BRACKET,FENDER			
NA01-50-1ZY	2				
50-101A		COVER,GRILLE			
NA01-50-101A	3				
50-114A		SPACER,E.A.FOAM			
NA01-50-114	1				
50-160D		BRACKET(L),F. BUMPER SIDE			
NA01-50-160	2				
50-18X		BRACKET,LICENCE PLATE			
NA01-50-18X	2				
50-180E		PROTECTOR,NO. PLATE			
FB01-50-144	1				
50-2A0		SET PLATE NO.1(R),RR BUMPER			
NA01-50-2A0	1				-9912

9912 NA35MM-1 0552

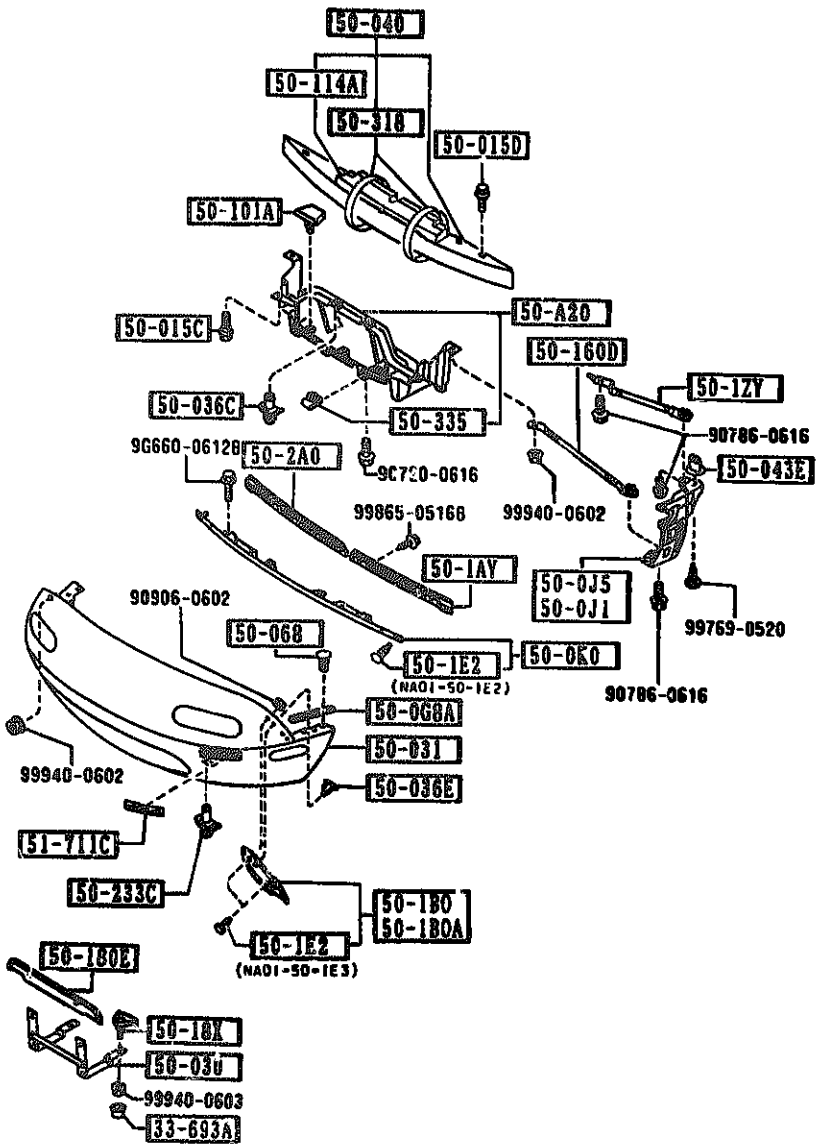

PART NO.	QTY	MODEL/RESTRICTION	MODEL/RESTRICTION	MODEL/RESTRICTION	FROM-TO
CONT'D					
NA01-50-2A0A	1				9912-
50-233C		FASTENER,REAR BUMPER			
8F82-50-233	3				
50-318		TAPE,ENGY ABS.FOAM-R R BUM			
NA01-50-318	2				
50-335		NUT,CLIP			
FB01-50-133	4				
51-711C		ORNAMENT,MAKER NAME-FRONT			
NA04-51-711	1				
14		SU UC DU HU LIGHT GRAY			
18		3L DARK GRAY			

9912 NA35HN-120552

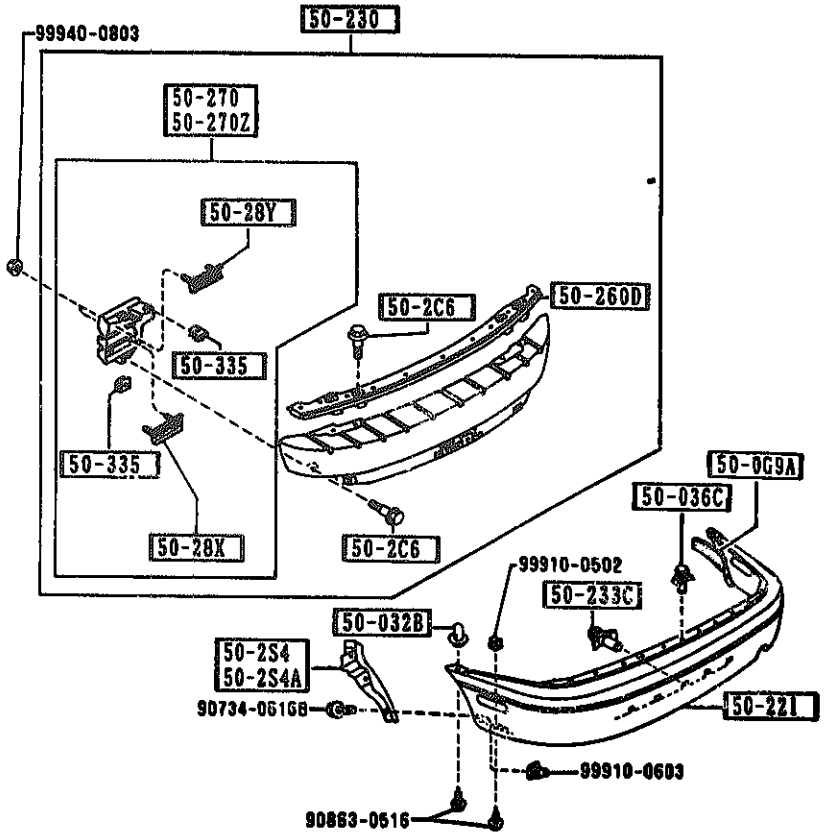

PART NO.	QTY	MODEL/RESTRICTION	MODEL/RESTRICTION	MODEL/RESTRICTION	FROM-TO
50-009A		SEAL,RUBBER-REAR BUMPER			
NA01-50-008	2				
50-032B		SLIDE'UP.',BUMPER			
QJ21-50-032	2				
50-036C		FASTENER			
8F67-50-033	11				
50-2C6		BOLT			
NA01-50-2C6	6				
50-2S4		SHILD(R),SPLASH-R.BUMPER			
NA01-50-2S4	1				
50-2S4A		SHILD(L),SPLASH-R.BUMPER			
NA01-50-2S5	1				
50-221		BUMPER,REAR			
NAY1-50-220A (NAY1-50-220A)	1				-9330
NAY1-50-220A	1				9330-
50-230		REINFORCEMENT,BUMPER			
NA01-50-260	1	(W/AIR BAG)			
NA07-50-260	1	(W/O AIR BAG)			0701-
50-233C		FASTENER,REAR BUMBER			
8F82-50-233	5				
50-260D		RETAINER,R.BUMPER			
NA01-50-2J0	1				
50-270		STAY(R),RR. BUMPER			
NA01-50-280A	1				
50-270Z		STAY(L),RR. BUMPER			
NA01-50-290A	1				
50-28X		PLATE SET			
NA01-50-28XC	2				

9330 NA35**-100072
0701 NA35**-200041

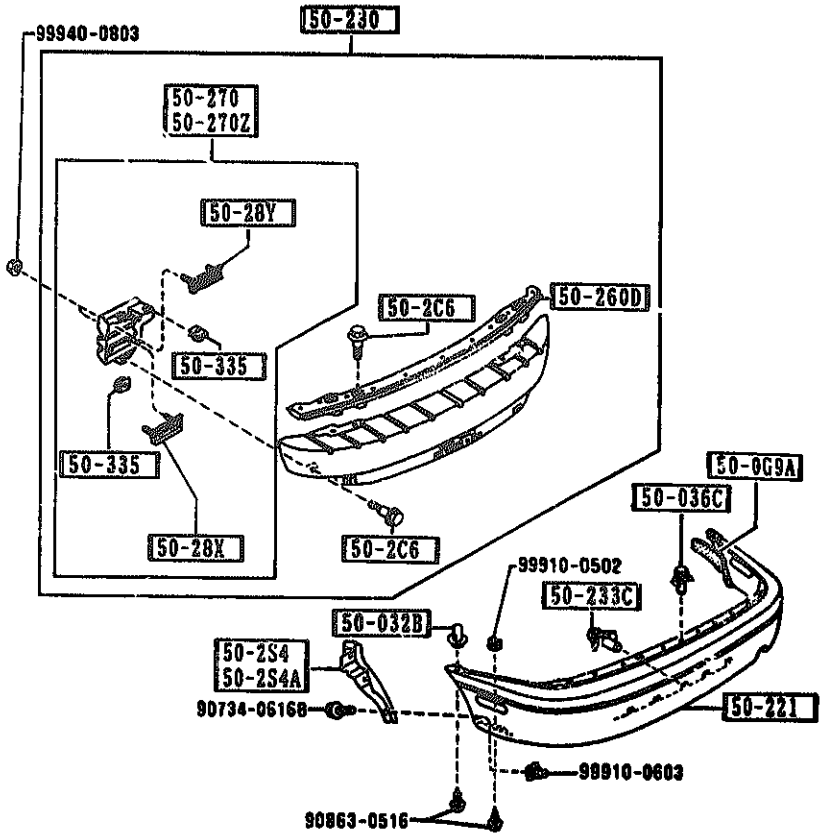

5010 -2 H REAR BUMPER

PART NO.	QTY	MODEL/RESTRICTION	MODEL/RESTRICTION	MODEL/RESTRICTION	FROM-TO
50-28Y		PLATE SET			
NA01-50-28YC	2				
50-33[illegible]		NUT,CLIP			
NA01-50-133	6				

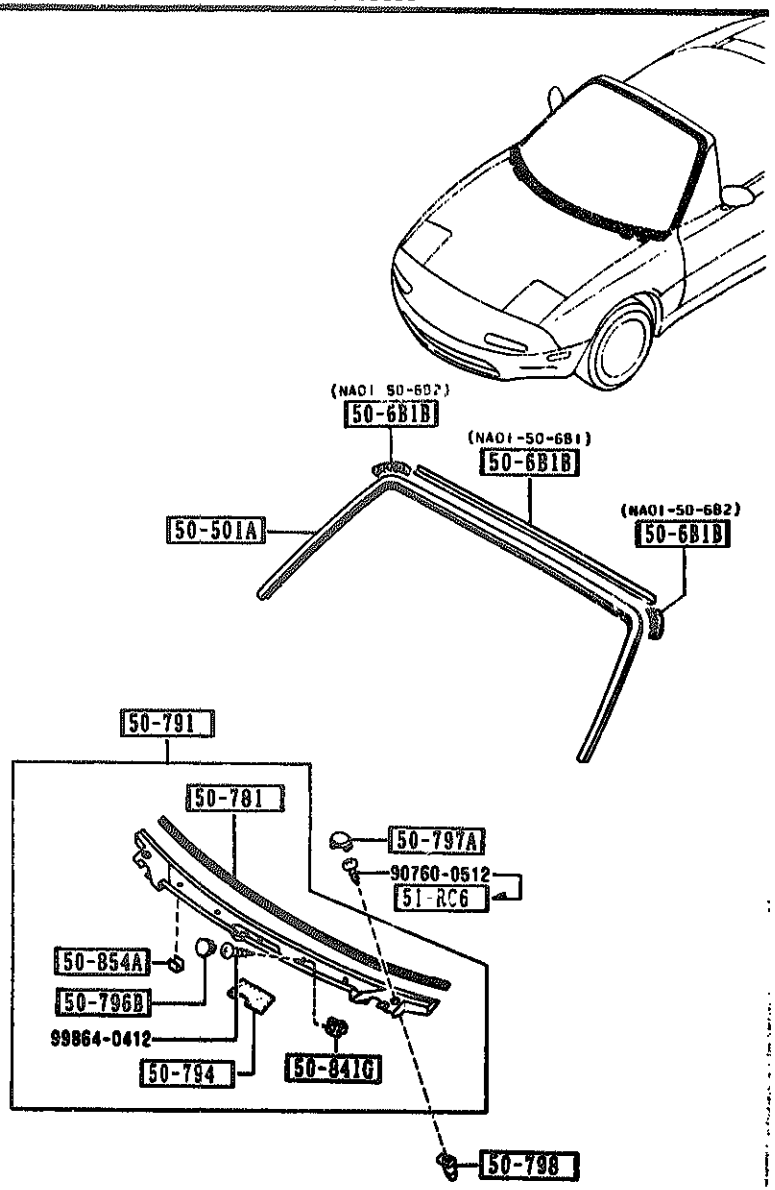

PART NO.	QTY	MODEL/RESTRICTION	MODEL/RESTRICTION	MODEL/RESTRICTION	FROM-TO
50-501A		MOULD(UP),FRT.WINDOW			
NAY1-50-601	1				
50-6B1B		PROTECTOR,MOULD-FRT WIND			
NA01-50-6B1	1				
NA01-50-6B2	2				9421-
50-781		PROTECTOR,COWL GRILL			
NA01-50-792 A (NA01-50-792A)	1				-9701
NA01-50-792A	1				9701-
50-791		GRILLE,COWL			
NA01-50-790A A (NA01-50-790B)	1				-9412
NA01-50-790B A (NA01-50-790C)	1				9412-9701
NA01-50-790C A (NA01-50-790D)	1				9701-9912
NA01-50-790D	1				9912-
50-794		PROTECTOR			
NA01-50-788	1				
50-796B		CAP			
6455-50-796	5				
50-797A		CAP			
NA01-50-797	2				
50-798		SCREW,GROMMET			
NA01-50-798	2				
50-841G		GROMMET,SCREW			
F044-51-912	5				-9412
NA01-51-789	5				9412-
50-854A		PROTECTOR			
NA01-50-794	4				
51-RC6		SCREW,SIDE GARNISH			

9412 NA35##-100416
9421 NA35##-101369
9701 NA35##-111969
9912 NA35##-120552

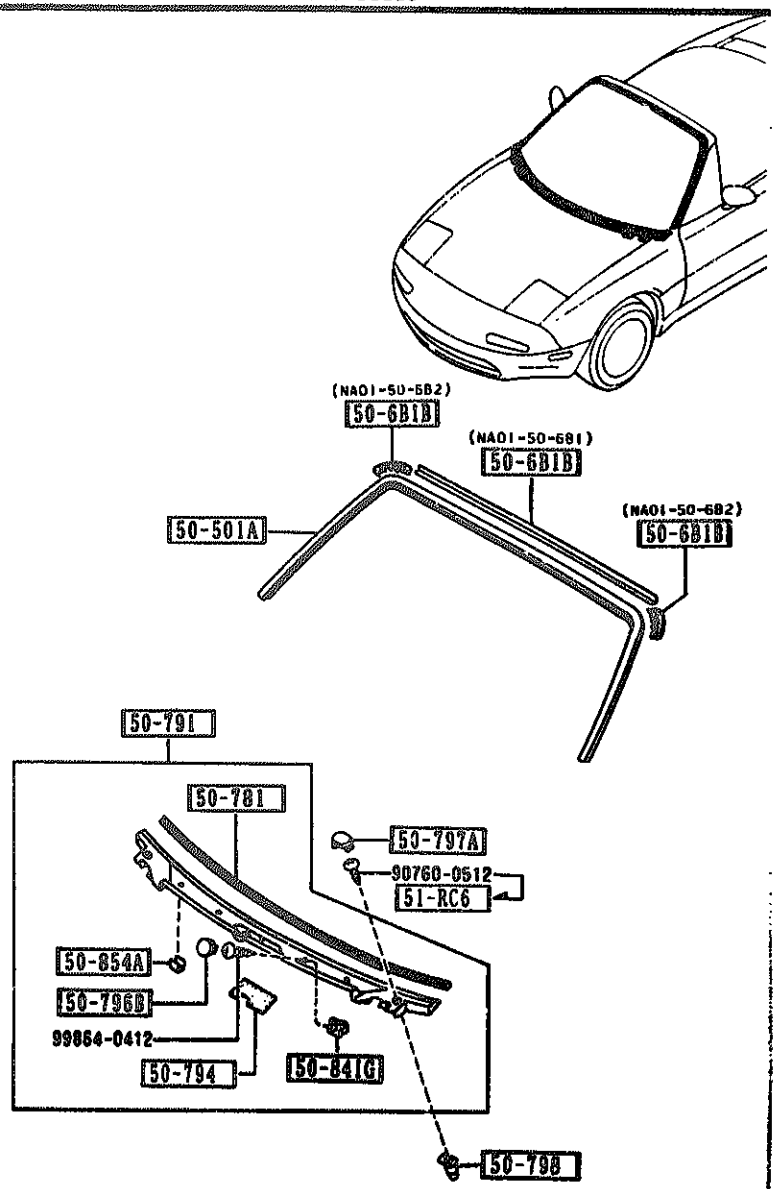

5030 -2 M WINDOW MOULDING & COWL GRILLES

PART NO.	QTY	MODEL/RESTRICTION	MODEL/RESTRICTION	MODEL/RESTRICTION	FROM-TO
CONT'D					
M272-51-RC6	2				9418-

9418 NA35HN-100895

5100 -1 N HEAD LAMPS

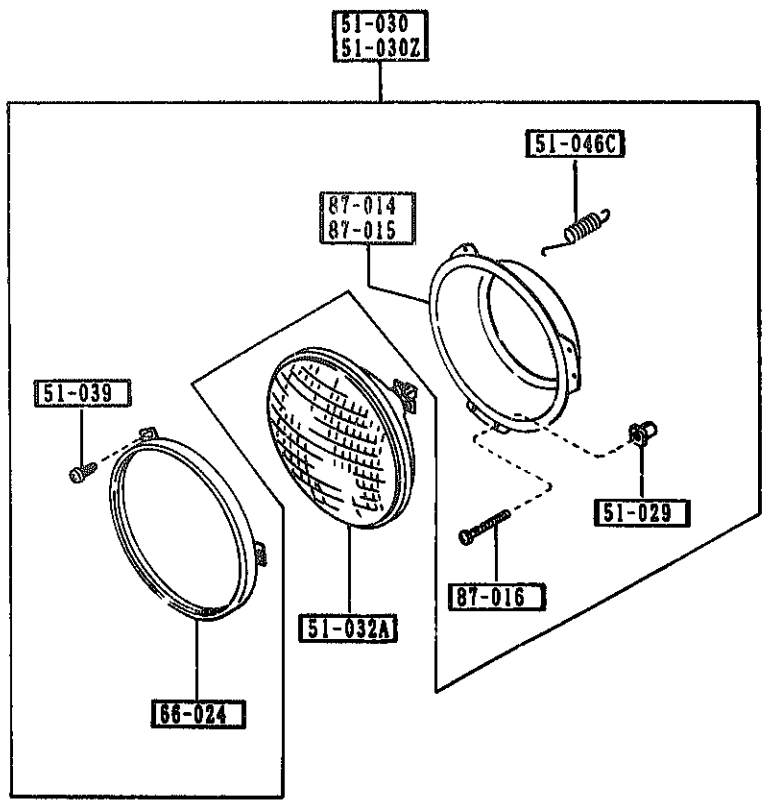

PART NO.	QTY	MODEL/RESTRICTION	MODEL/RESTRICTION	MODEL/RESTRICTION	FROM-TO
51-029		GROMMET,SCREW			
0483-66-061A	4				
51-030		LAMP SET(R),HEAD			
8BN1-51-030	1				
51-030Z		LAMP SET(L),HEAD			
8BN1-51-040	1				
51-032A		UNIT,HEAD LAMP			
NA02-51-031	2				
51-039		SCREW			
B481-51-0E3	6				
51-046C		SPRING			
NA01-51-046	2				
66-024		RING,RETAINING			
NA01-51-033	2				
87-014		RING(R)MOUNTING			
NA01-51-032	1				
87-015		RING(L)MOUNTING			
NA01-51-034	1				
87-016		SCREW,ADJUST			
NA01-51-037	4				

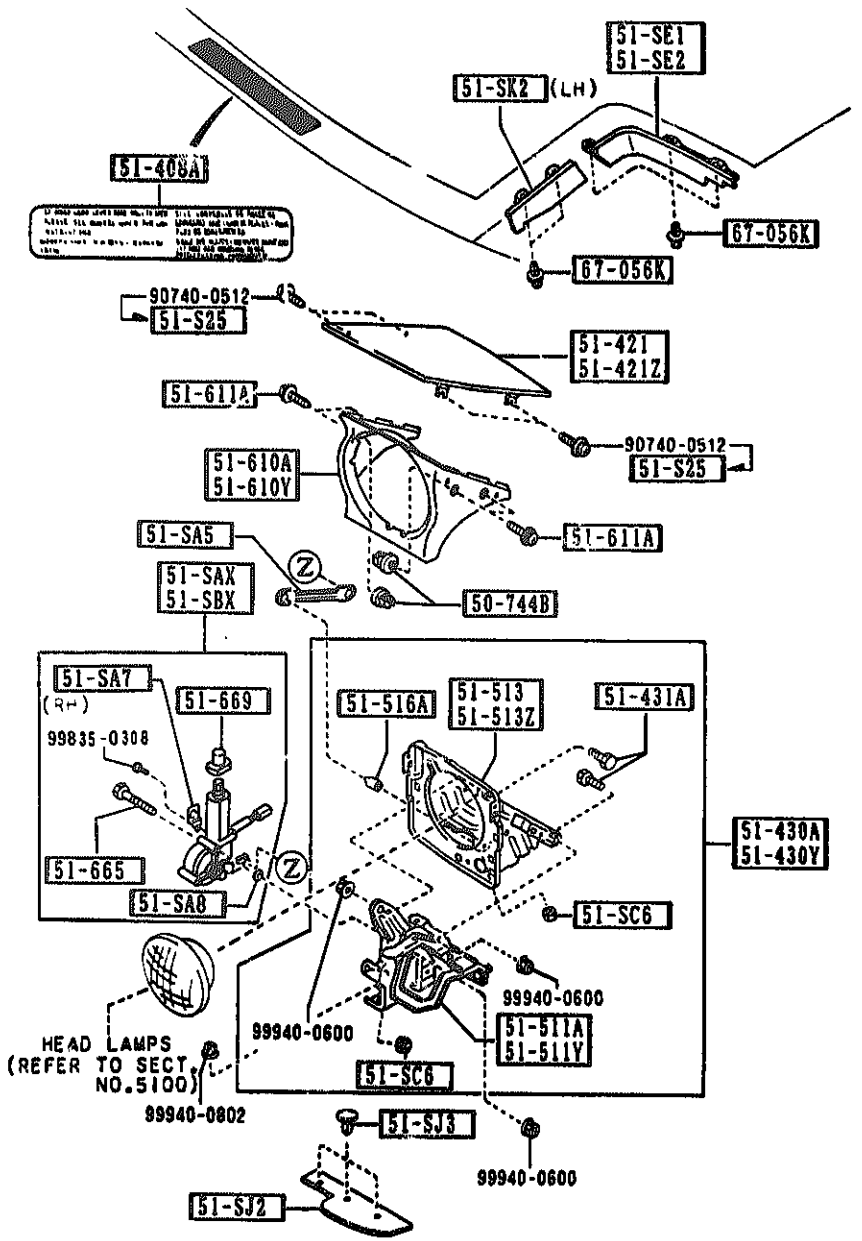

PART NO.	QTY	MODEL/RESTRICTION	MODEL/RESTRICTION	MODEL/RESTRICTION	FROM-TO
50-744B 8481-50-744	8	GROMMET,SCREW			
51-SAX NA01-51-SAX	1	MOTOR(R),RETRACTABLE HEAD			
51-SA5 NA01-51-SA5	2	ROD,RETRACTABLE			
51-SA7 NA01-51-SA7	1	BRACKET,CLIP			
51-SA8 NA01-51-SA8	6	WASHER			
51-SBX NA01-51-SBX	1	MOTOR(L),RETRACTABLE HEAD			
51-SC6 KA01-51-SC6	4	NUT,STOPPER-LAMP HINGE			
51-SE1 NA01-51-SE1	1	PROTECTOR(R),RETRA H/L			
51-SE2 NA01-51-SE2	1	PROTECTOR(L),RETRA. H/L			
51-SJ2 NA01-51-SJ2	2	PROTECTOR(L),RETRA. FRONT			
51-SJ3 NA01-51-SJ3	6	CLIP			
51-SK2 NA01-51-SK2	1	PROTECTOR(L),RETRA. SIDE			
51-S25 BS34-51-S25A	8	BOLT,LAMP LID			
51-408A NA04-51-S02	1	LABEL,COUTION-RETRACTABLE			

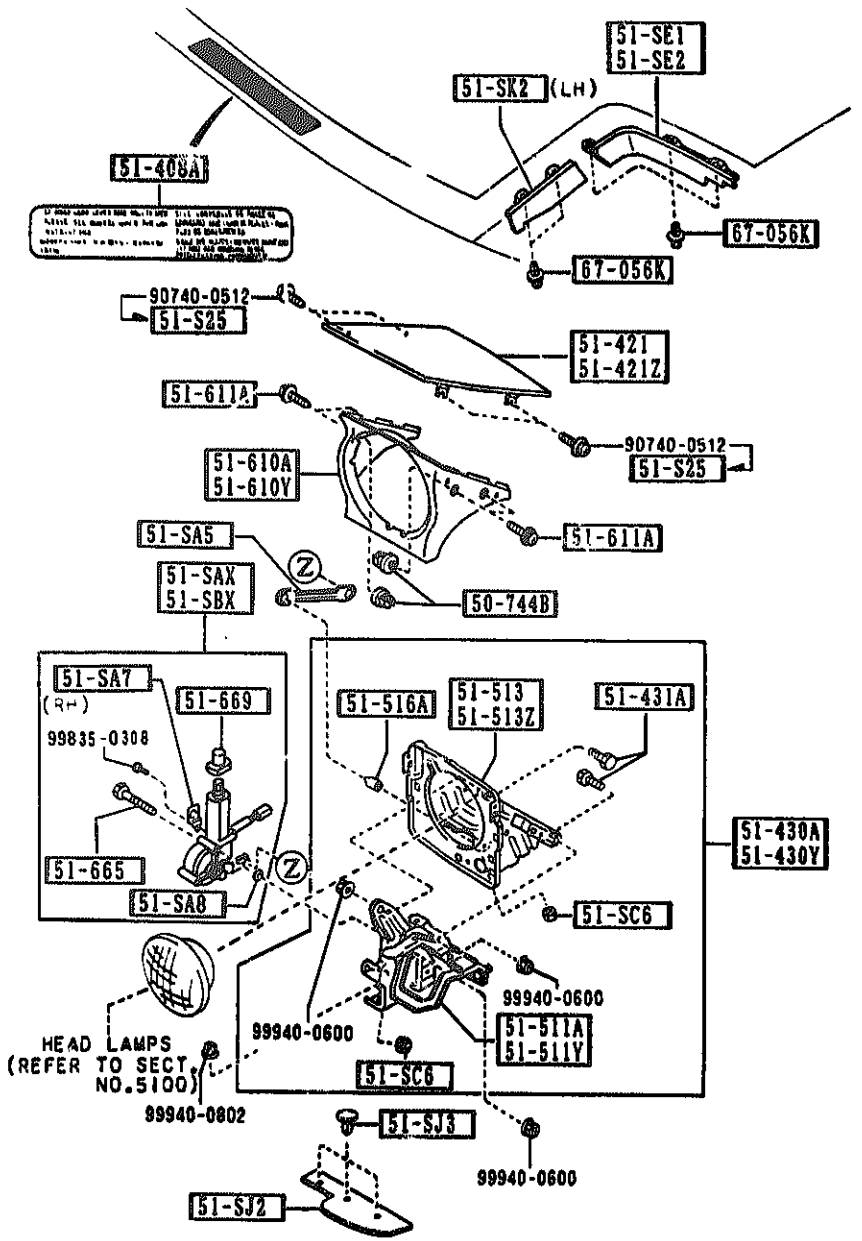

PART NO.	QTY	MODEL/RESTRICTION	MODEL/RESTRICTION	MODEL/RESTRICTION	FROM-TO
50-744B 8481-50-744	8	GROMMET,SCREW			
51-SAX NA01-51-SAX	1	MOTOR(R),RETRACTABLE HEAD			
51-SA5 NA01-51-SA5	2	ROD,RETRACTABLE			
51-SA7 NA01-51-SA7	1	BRACKET,CLIP			
51-SA8 NA01-51-SA8	6	WASHER			
51-SBX NA01-51-SBX	1	MOTOR(L),RETRACTABLE HEAD			
51-SC6 KA01-51-SC6	4	NUT,STOPPER-LAMP HINGE			
51-SE1 NA01-51-SE1	1	PROTECTOR(R),RETRA H/L			
51-SE2 NA01-51-SE2	1	PROTECTOR(L),RETRA. H/L			
51-SJ2 NA01-51-SJ2	2	PROTECTOR(L),RETRA. FRONT			
51-SJ3 NA01-51-SJ3	6	CLIP			
51-SK2 NA01-51-SK2	1	PROTECTOR(L),RETRA. SIDE			
51-S25 BS34-51-S25A	8	BOLT,LAMP LID			
51-408A NA04-51-S02	1	LABEL,COUTION-RETRACTABLE			

SECTION NAME INDEX (BODY)

LO.NO	SEC.NO	SECTION NAME
2-C05	0900	KEY SETS
2-E05	5000	FRONT BUMPER
2-H05	5010	REAR BUMPER
2-J05	5030	WINDOW MOULDING & COWL GRILLES
2-L05	5100	HEAD LAMPS
2-M05	5103	HEAD LAMP RETRACTORS
2-D06	5105	FRONT COMBINATION LAMPS
2-F06	5110	REAR COMBINATION LAMPS
2-I06	5120	LICENSE LAMPS
2-J06	5180	REAR FINISHER
2-L06	5230	BONNET
2-N06	5260	TRUNK LID
2-D07	5310	BODY PANELS (FRONT)
2-E07	5320	BODY PANELS (FENDER & WHEEL APRON)
2-H07	5330	BODY PANELS (DASH & COWL PANEL)
2-I07	5340	BODY PANELS (SIDE)
2-C08	5370	BODY PANELS (FLOOR)
2-F08	5380	FLOOR ATTACHMENTS (HOLE COVERS)
2-G08	5390	FLOOR ATTACHMENTS
2-C09	5500	DASHBOARD EQUIPMENTS
2-E09	5520	METER HOOD
2-F09	5530	SPEEDOMETER CABLE
2-G09	5540	METER COMPONENTS
2-I09	5560	DASHBOARD & RELATED PARTS
2-L09	5570	CONSOLE
2-C10	5580	VENTILATOR
2-D10	5700	SEATS
2-K10	5790	SEAT BELTS
2-L10	5800	FRONT DOORS
2-C11	5830	FRONT DOOR MECHANISMS
2-F11	5840	FRONT DOOR TRIMS & RELATED PARTS
2-C12	6100	HEATER
2-D12	6110	HEATER UNIT COMPONENTS
2-E12	6115	HEATER CONTROLS COMPONENTS
2-F12	6120	HEATER BLOWER COMPONENTS
2-G12	6130	AIR CONDITIONER
2-K12	6135	O RING SET,PIPING
2-L12	6140	COMPRESSOR COMPONENTS (AIR CONDITIONER)
2-N12	6150	COOLING UNIT (AIR CONDITIONER)
2-C13	6300	WINDOW GLASSES
2-D13	6330	SUNROOF
2-M13	6600	SWITCHES & RELAYS (ENGINE)
2-[illegible]	6610	DASHBOARD SWITCHES
2-E14	6611	COMBINATION SWITCH
2-F14	6630	RELAYS & UNIT (BODY)
2-G14	6635	DOOR SWITCH & HORNS
2-H14	6640	AUTO CRUISE CONTROL SYSTEM
2-I14	6680	AUDIO SYSTEMS (RADIO & TAPE DECK)
2-K14	6682	AUDIO SYSTEMS (ANTENNA & SPEAKER)
2-L14	6700	WIRING HARNESSES(FRONT & REAR)
2-N14	6701	WIRING HARNESSES(ENGINE & T/MISSION)
2-D15	6702	WIRING HARNESSES(DASHBOARD)
2-E15	6703	WIRING HARNESSES(DOOR,FLOOR/CEILING)
2-F15	6704	WIRING HARNESS CLAMPS
2-I15	6720	WINDSHIELD WASHER
2-K15	6730	WINDSHIELD WIPERS
2-M15	6740	WIPER MOTOR COMPONENTS(FRONT)
2-N15	6820	FRONT HEADER TRIM & PILLAR TRIMS
2-C16	6840	TRIMS & SCUFF PLATES
2-E16	6860	FLOOR MATS & PADS
2-G16	6870	SERVICE TOOLS
2-H16	6900	VISORS,ASSIST HANDLES & MIRRORS
2-J16	6930	CAUTION PLATES & LABELS
2-L16	7250	QUARTER WINDOW & TRIMS
3-C03	7900	ACCESSORIES

CATLOG-NO= AUNA01-07

DATE. 1992-02

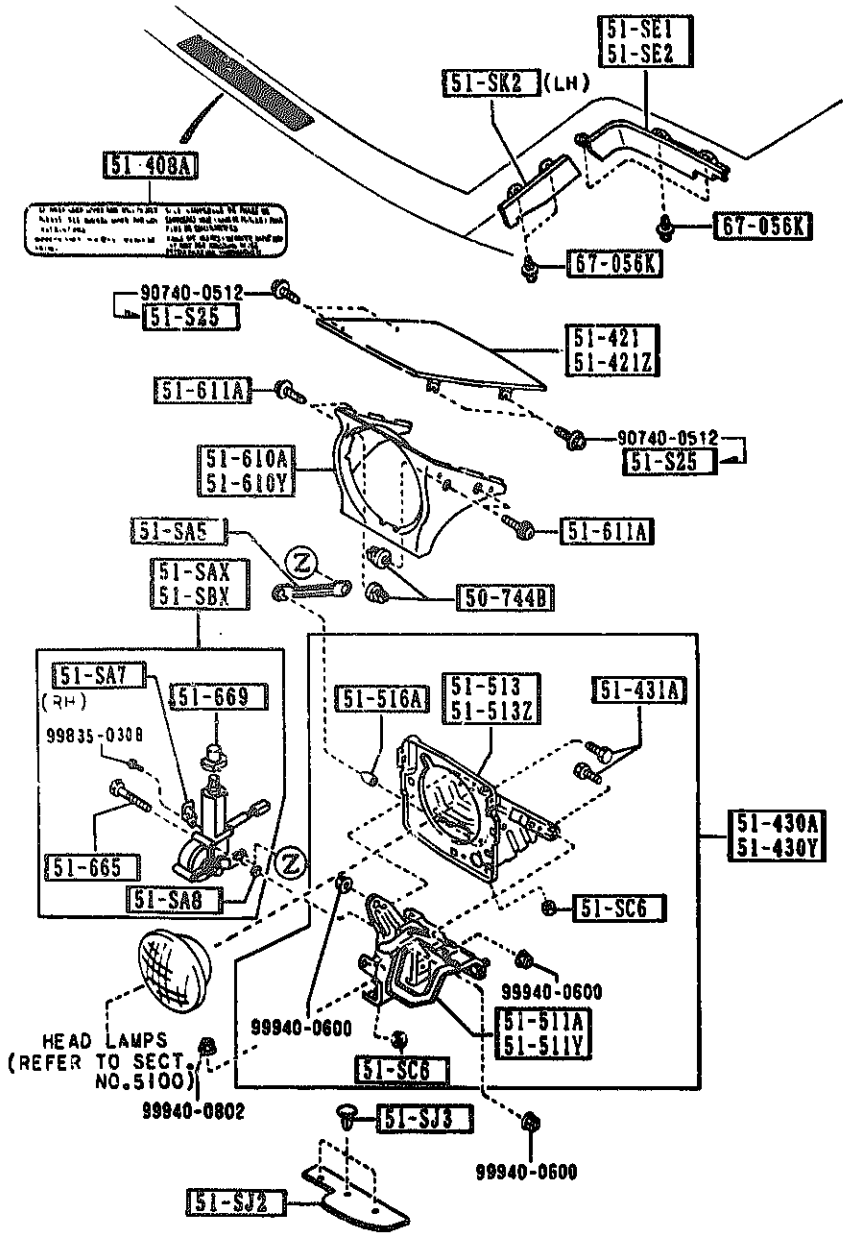

PART NO.	QTY	MODEL/RESTRICTION	MODEL/RESTRICTION	MODEL/RESTRICTION	FROM-TO
51-610A		BEZEL(R),HEAD LAMP			
NA01-50-741	1				
51-610Y		BEZEL(L),HEAD LAMP			
NA01-50-751	1				
51-611A		SCREW,HEAD LAMP BEZEL			
8481-50-75X	8				
51-665		BOLT,MOTOR-RETRACT H/LAMP			
FB01-51-665	6				
51-669		BOOTS,MOTOR-RETRACT H/L			
NA01-51-669	2				
67-056K		RIVET			
UB39-50-795	8				

5105 FRONT COMBINATION LAMPS

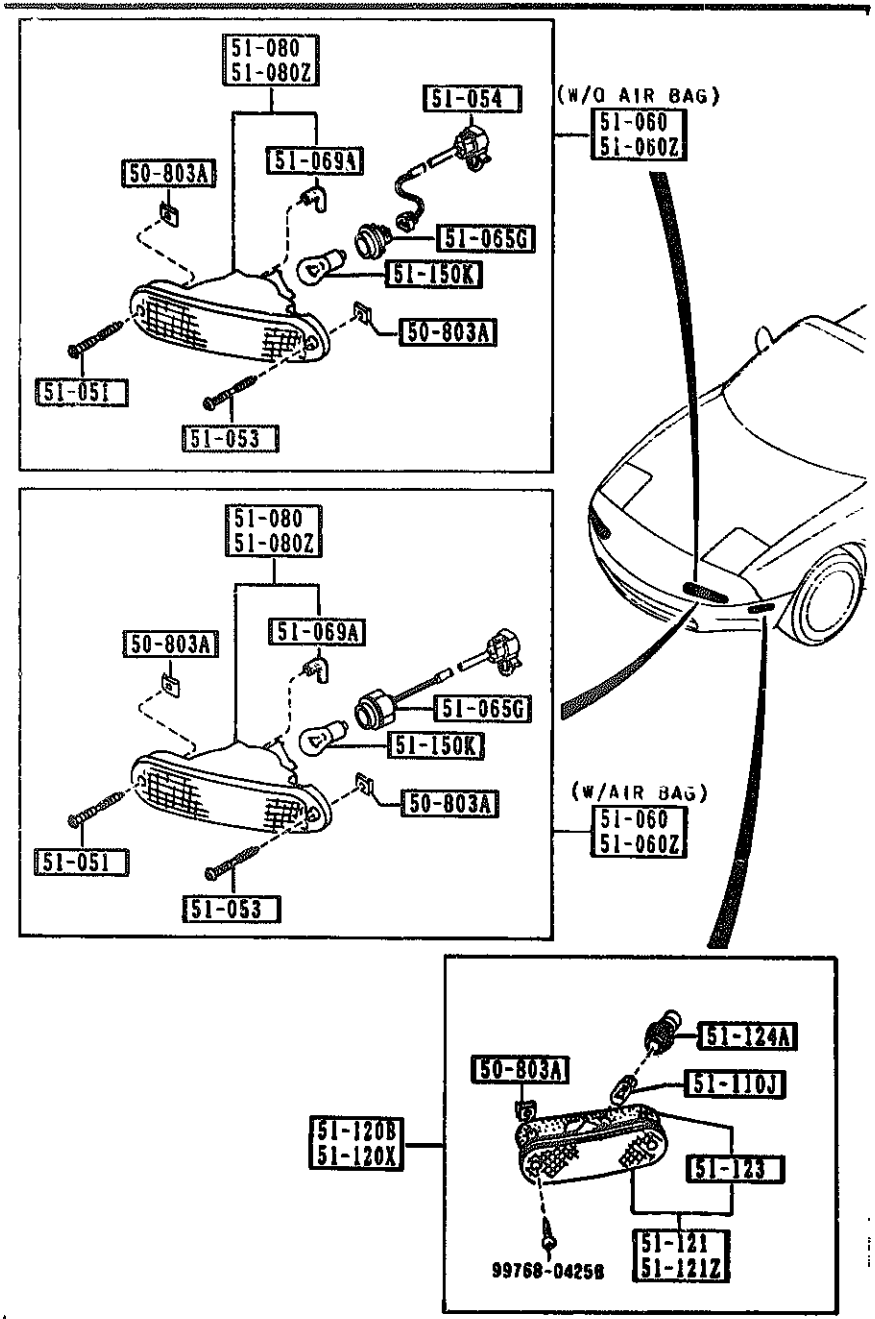

PART NO.	QTY	MODEL/RESTRICTION	MODEL/RESTRICTION	MODEL/RESTRICTION	FROM-TO
50-803A		NUT,SIDE PROTECTOR			
G158-50-803	8				
51-051		SCREW			
NA01-51-051	2				-0301
51-053		SCREW			
NA01-51-053	2				-0301
51-054		CORD,FRONT COMB.			
NA07-51-054	2	(W/O AIR BAG)			0701-
51-060		LAMP SET(R),FRT COMB			
8BN1-51-060	1	(W/AIR BAG)			
8BN2-51-060	1	(W/O AIR BAG)			0701-
51-060Z		LAMP SET(L),FRT COMB			
8BN1-51-070	1	(W/AIR BAG)			
8BN2-51-070	1	(W/O AIR BAG)			0701-
51-065G		SOCKET,F. COMB. LAMP			
NA01-51-064	2	(W/AIR BAG)			
NA07-51-064	2	(W/O AIR BAG)			0701-
51-069A		TUBE,HEAD LAMP			
NA01-51-069	2				
51-080		LENS & HOUSING(R)			
NA01-51-06X A (NA01-51-06XA)	1				-9601
NA01-51-06XA	1				9601-
51-080Z		LENS & HOUSING(L)			
NA01-51-07X A (NA01-51-07XA)	1				-9601
NA01-51-07XA	1				9601-
51-110J		BULB			
99701-6038	2	12V 3.8W			

9601 NA35MM-106797
0301 NA35MM-141901
0701 NA35MM-200041

5105 FRONT COMBINATION LAMPS

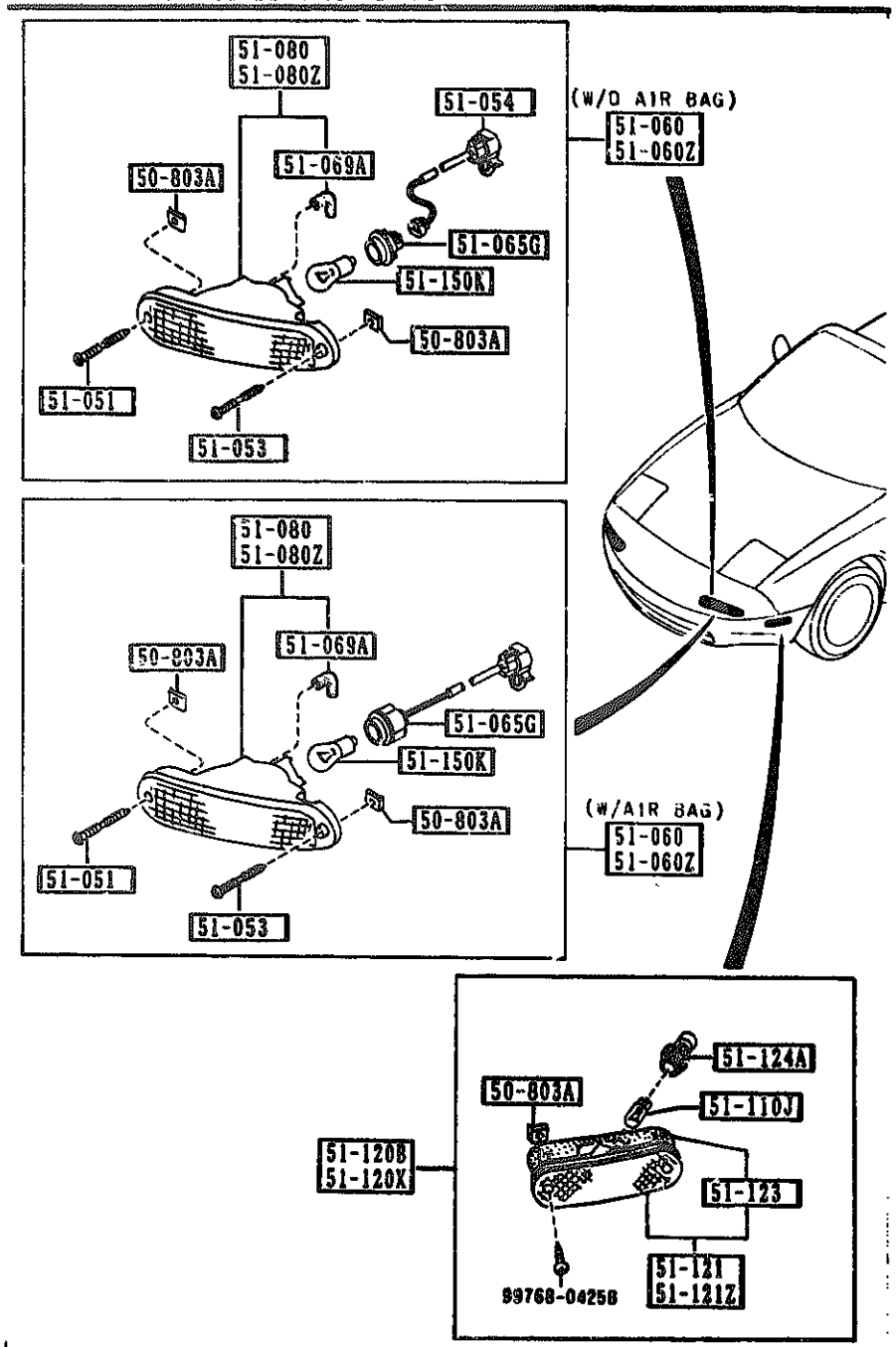

PART NO.	QTY	MODEL/RESTRICTION	MODEL/RESTRICTION	MODEL/RESTRICTION	FROM-TO
51-120B		LAMP SET(R),SIDE TUR			
8BN1-51-120	1				
51-120X		LAMP SET(L),SIDE TUR			
8BN1-51-130	1				
51-121		LENS & BODY(R)			
NA01-51-5E1B A (NA01-51-5E1C)	1				-9401
NA01-51-5E1C	1				9401-9901
NA01-51-5EX	1				9901-
51-121Z		LENS & BODY(L)			
NA01-51-5F1B A (NA01-51-5F1C)	1				-9401
NA01-51-5F1C	1				9401-9901
NA01-51-5FX	1				9901-
51-123		GASKET,SIDE TURN			
NA01-51-5D3	2				9901-
51-124A		SOCKET,SIDE TURN			
NA01-51-5E2	2				
51-150K		BULB			
99701-4278Y	2	A12V 27/8W			

9401 NA35**-100090
9901 NA35**-119257

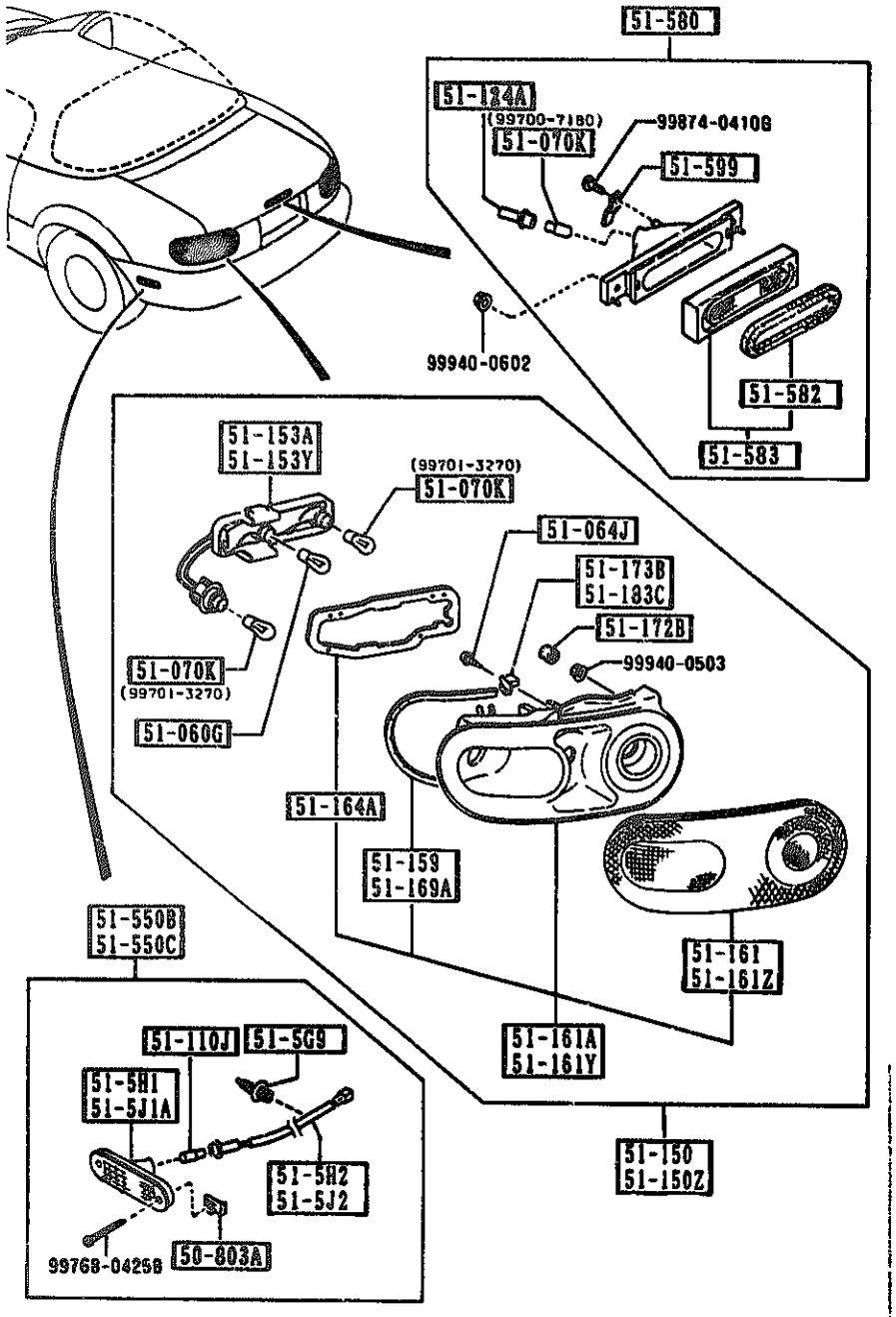

PART NO.	QTY	MODEL/RESTRICTION	MODEL/RESTRICTION	MODEL/RESTRICTION	FROM-TO
50-803A		NUT,SIDE PROTECTOR			
G158-50-803	4				
51-060G		BULB			
99701-4278	2	12V 27W/8W			
51-064J		SCREW,TAPPING			
NA01-51-1E6	2				
51-070K		BULB			
99700-7180	1	A12V 18.4W			
99701-3270	4	12V 27W			
51-110J		BULB			
99701-6038	2	12V 3.8W			
51-124A		SOCKET,SIDE TURN			
BJ38-51-584	1				
51-150		LAMP SET(R),RR.COMB.			
8BN1-51-150	1				
51-150Z		LAMP SET(L),RR.COMB.			
8BN1-51-160	1				
51-153A		SOCKET(R),RR.COMB.			
N001-51-155A	1				
51-153Y		SOCKET(L),RR.COMB.			
N001-51-165A	1				
51-159		PROTECTOR(R),'A'			
NA01-51-159	1				
51-161		LENS(R),RR.COMB.			
NA01-51-15XB	1				
51-161A		LENS & BODY(R),RR COMB.			

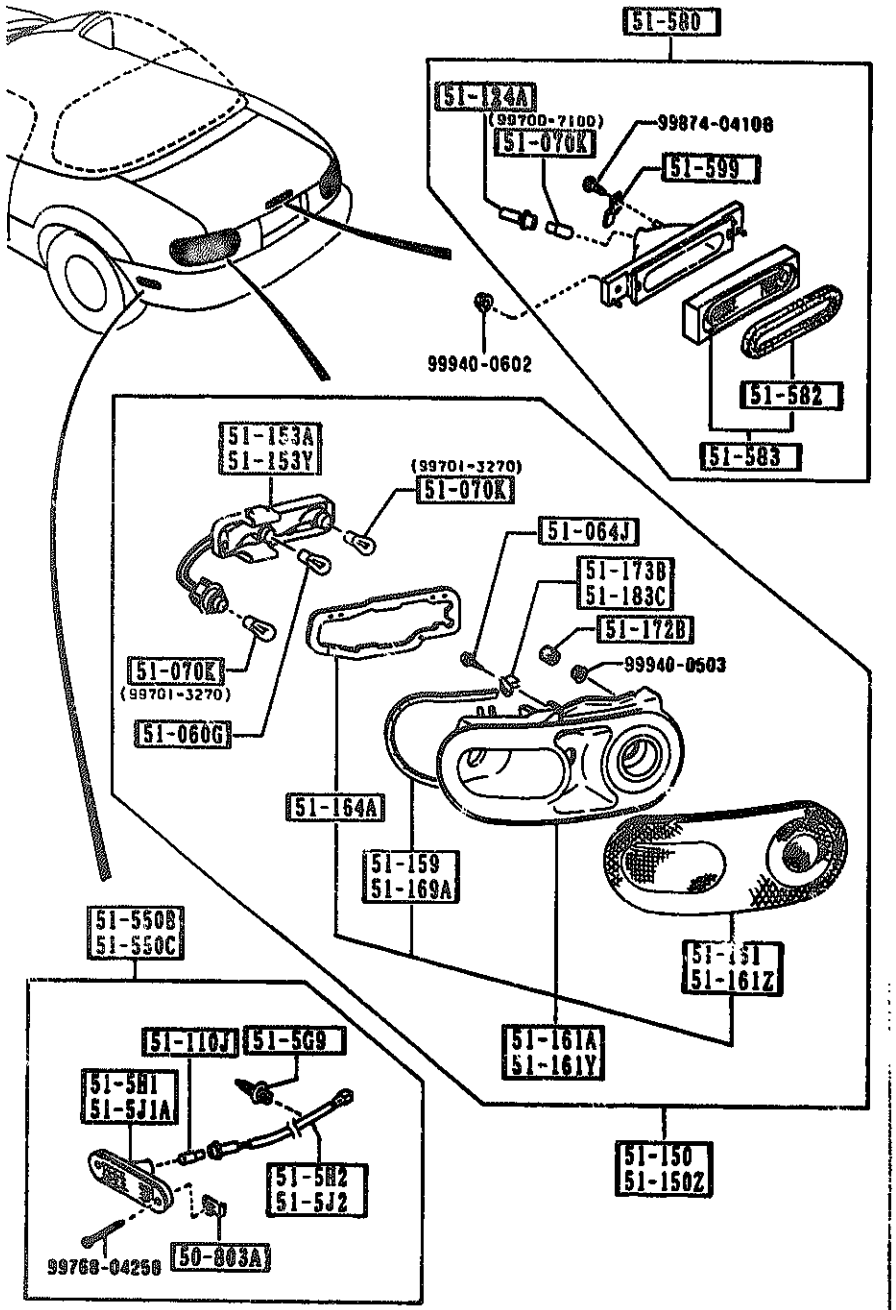

PART NO.	QTY	MODEL/RESTRICTION	MODEL/RESTRICTION	MODEL/RESTRICTION	FROM-TO
CONT'D					
NA01-51-170B	1				
51-161Y		LENS & BODY(L),RR COMB.			
NA01-51-180B	1				
51-161Z		LENS(L),RR.COMB.			
NA01-51-16XB	1				
51-164A		GASKET,RR.COMB.			
NA01-51-158	2				
51-169A		PROTECTOR(L),'A'			
NA01-51-169	1				
51-172B		CAP			
0030-51-172	3				
51-173B		PROTECTOR(R),'B'			
NA01-51-173	1				
51-183C		PROTECTOR(L),'B'			
NA01-51-183	1				
51-5G9		CLIP			
NA01-51-5G9	8				
51-5H1		LENS & BODY(R),RR SIDE TURN			
NA01-51-5H1A	1				-9401
A (NA01-51-5H1B)					
NA01-51-5H1B	1				9401-
51-5H2		SOCKET(R),RR SIDE TURN			
NA01-51-5H2A	1				
51-5J1A		LENS & BODY(L),RR SIDE TURN			
NA01-51-5J1A	1				-9401
A (NA01-51-5J1B)					
NA01-51-5J1B	1				9401-
51-5J2		SOCKET(L),RR SIDE TURN			
NA01-51-5J2A	1				

9401 NA35MN-100090

5110 REAR COMBINATION LAMPS

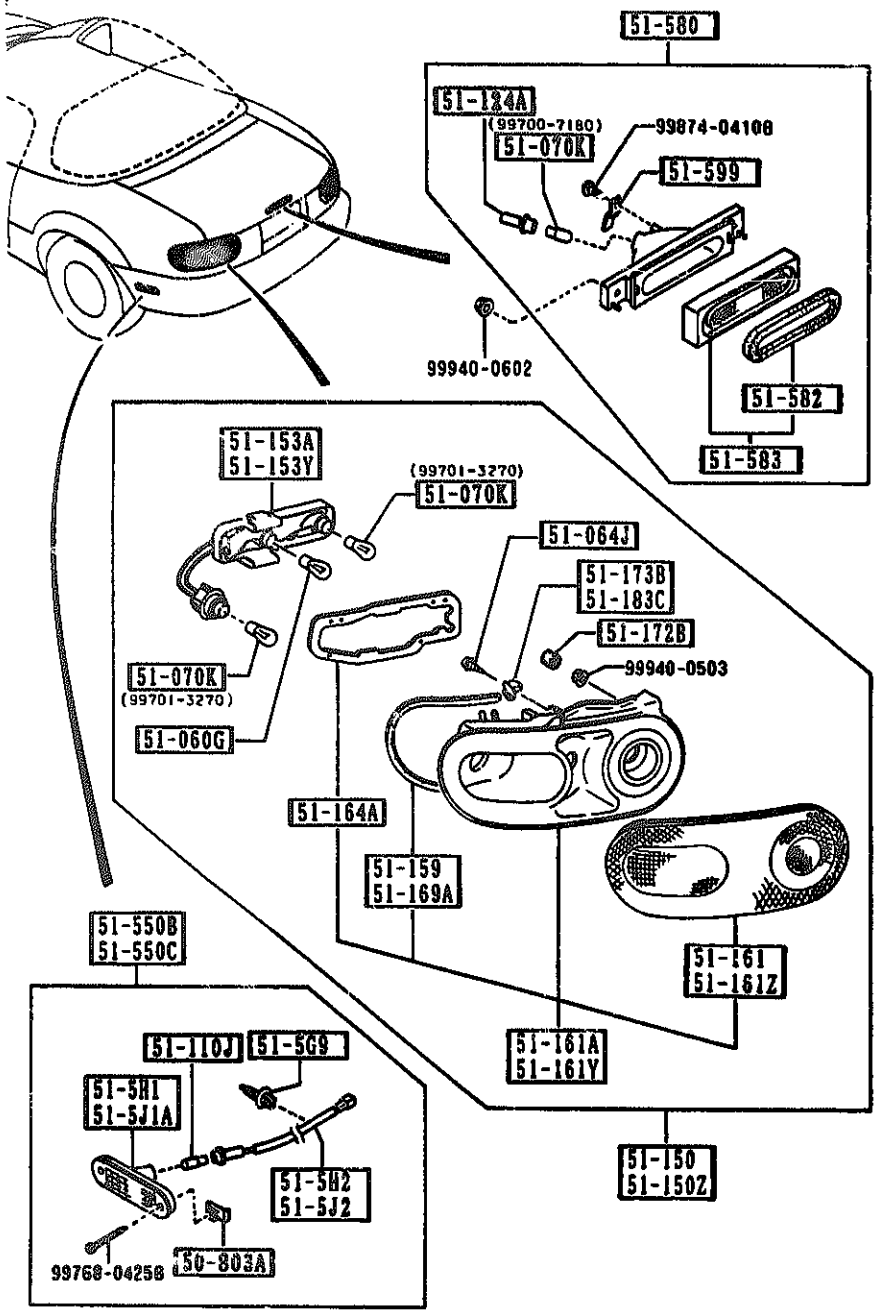

PART NO.	QTY	MODEL/RESTRICTION	MODEL/RESTRICTION	MODEL/RESTRICTION	FROM-TO
51-550B 8BN1-51-550	1	LAMP SET(R),SIDE TURN-RR			
51-550C 8BN1-51-560	1	LAMP SET(L),SIDE TURN-RR			
51-580 NA01-51-580B	1	LAMP,STOP-HI.MOUNT.			
51-582 NA01-51-592B	1	GASKET,STOP LAMP-HI.MOUNT			
51-583 NA01-51-58XA	1	LENS,STOP LAMP-HI.MOUNT			
51-599 NA01-51-599	1	FASTENER,STOP LAMP-HI.			

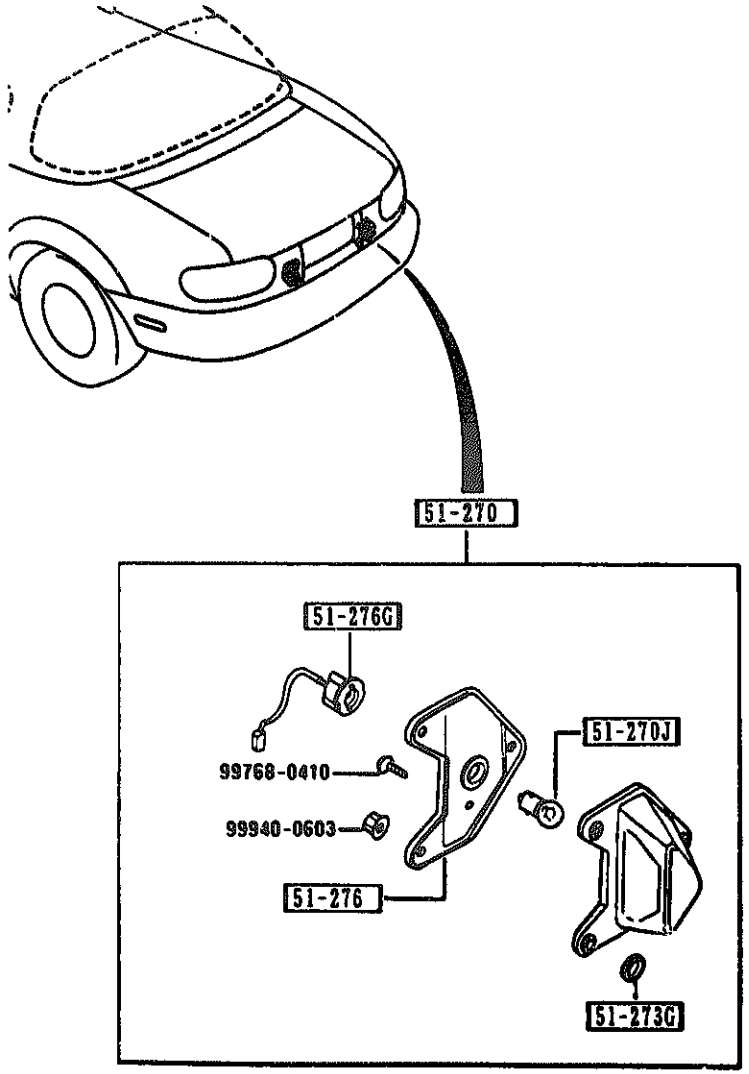

5120 -1 M LICENSE LAMPS

PART NO.	QTY	MODEL/RESTRICTION	MODEL/RESTRICTION	MODEL/RESTRICTION	FROM-TO
51-270		LAMP,LICENSE			
8BF1-51-270	2				
51-270J		BULB			
99701-2070	2	12V 7.5W			
51-273G		GASKET,LICENSE LAMP			
FB67-51-273	2				
51-276		SHADE,LAMP-LICENSE			
FB67-51-276	2				
51-276G		SOCKET,LICENSE LAMP			
FB67-51-272	2				

5180 -1 REAR FINISHER

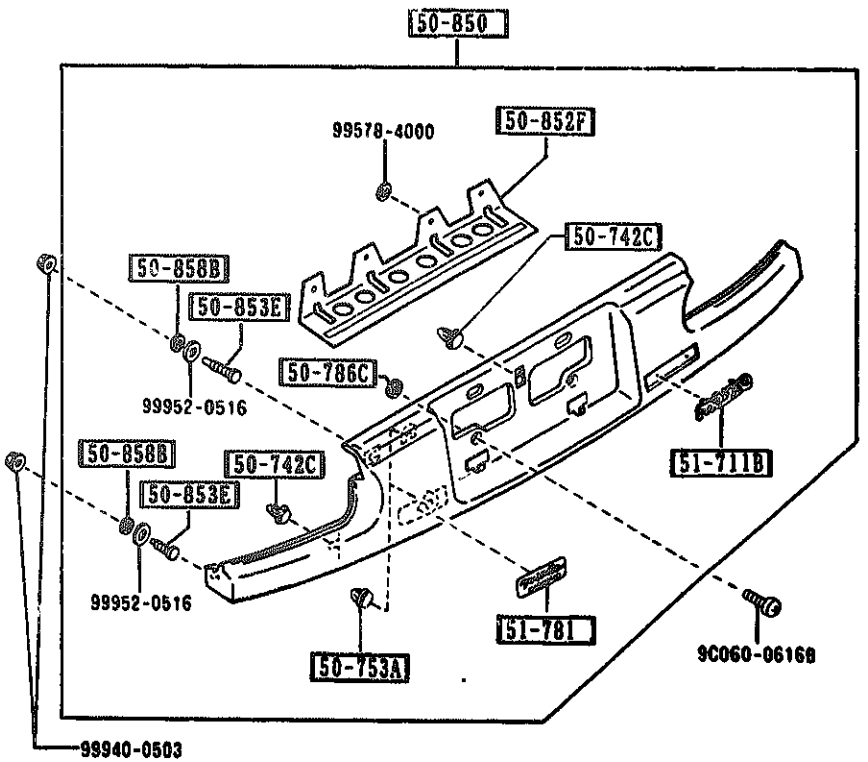

PART NO.	QTY	MODEL/RESTRICTION	MODEL/RESTRICTION	MODEL/RESTRICTION	FROM-TO
50-742C		CLIP			
G043-50-742	3				
50-753A		FASTENER			
G043-50-753	4				
50-786C		GASKET			
G030-50-786	2				
50-850		FINISHER,REAR			
NA01-50-850A A (NA01-50-850C)	1				-9901
DU		DU MARINER BLUE			
SU		SU CLASSIC RED			
UC		UC CRYSTAL WHITE			
3L		3L SILVER STONE METALLIC			
NA01-50-850C A (NA01-50-850D)	1				9901-9914
DU		DU MARINER BLUE			
SU		SU CLASSIC RED			
UC		UC CRYSTAL WHITE			
3L		3L SILVER STONE METALLIC			
NA01-50-850D	1				9914-
DU		DU MARINER BLUE			
HU		HU NEO GREEN			
SU		SU CLASSIC RED			
UC		UC CRYSTAL WHITE			
3L		3L SILVER STONE METALLIC DU SILVER STONE METALLIC HU SILVER STONE METALLIC SU SILVER STONE METALLIC UC SILVER STONE METALLIC 3L SILVER STONE METALLIC			
50-852F		REINFORCEMENT			
NA01-50-852	1				

9901 NA35MM-119257
9914 NA35MM-120856

5180 -2 M REAR FINISHER

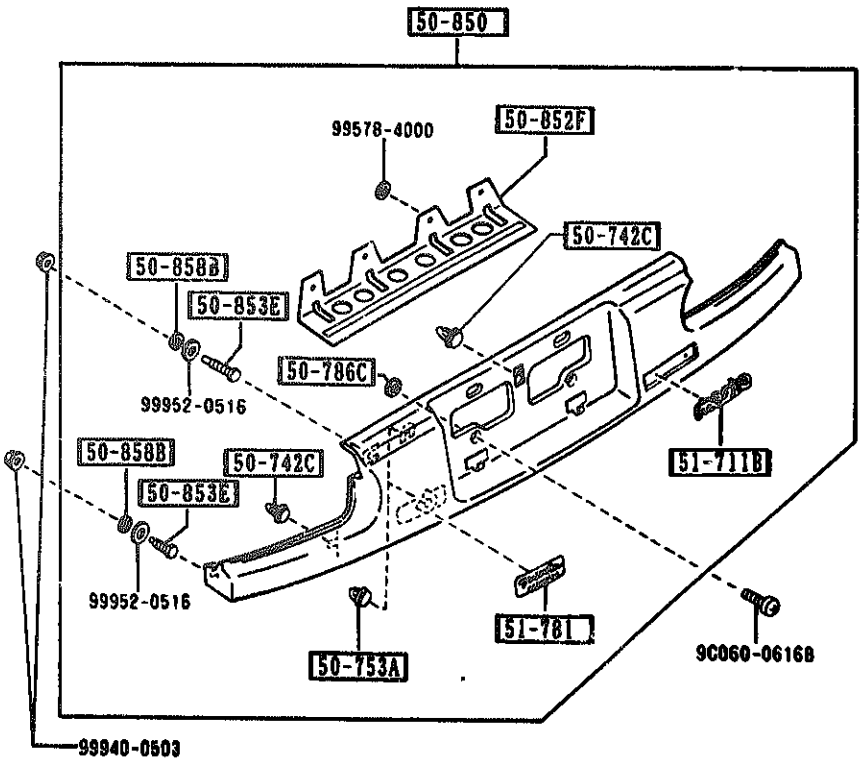

PART NO.	QTY	MODEL/RESTRICTION	MODEL/RESTRICTION	MODEL/RESTRICTION	FROM 70
50-853E		BOLT,GARNISH-RR			
LA01-50-853	4				
50-858B		GASKET,REAR FINISHER			
B388-50-855	4				
51-711B		ORNAMENT,MAKER NAME-REAR			
NA01-51-711	1				
51-781		ORNAMENT,REAR			
NA01-51-721	1				

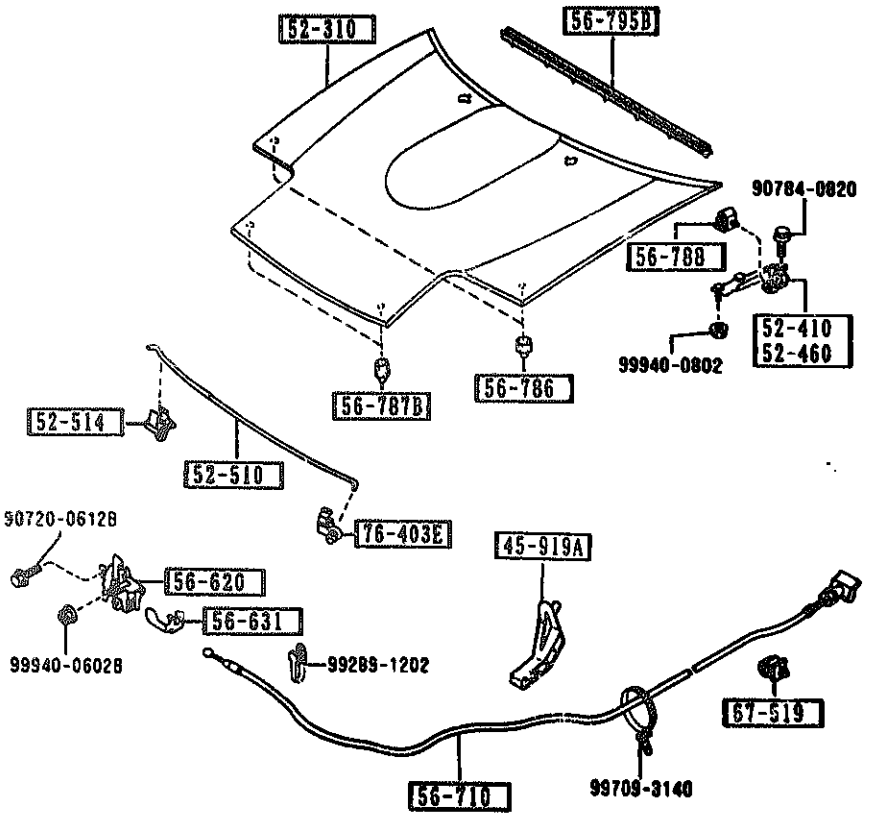

PART NO.	QTY	MODEL/RESTRICTION	MODEL/RESTRICTION	MODEL/RESTRICTION	FROM TO
45-919A		HOLDER,PIPE			
H115-45-916A	1				
52-310		BONNET			
NAY1-52-310	1				-9406
A (NAY1-52-310A)					
NAY1-52-310A	1				9406-
52-410		HINGE(R),BONNET			
NA01-52-410A	1				
52-460		HINGE(L),BONNET			
NA01-52-420A	1				
52-510		STAY,BONNET			
NA01-56-650	1				
52-514		HOLDER,ROD			
G030-56-693	1				
56-620		LOCK,BONNET			
NA01-56-620A	1				
56-631		FASTENER,BONNET RELEASE			
LA01-56-631	1				
56-710		WIRE,RELEASE-BONNET			
NA01-56-720A	1				-9601
A (NA01-56-720B)					
NA01-56-720B	1				9601-9C01
AN(NA01-56-720C)					
NA01-56-720C	1				9C01-
56-786		RUBBER(C),CUSHION-BONNET			
NA01-56-787	2				
56-787B		RUBBER,CUSHION-BONNET FRT			
F801-56-787A	2				
56-788		RUBBER,CUSHION-BONNET RR			
NA01-56-78X	2				

9406 NA35##-100142
9601 NA35##-106797
9C01 NA35##-130310

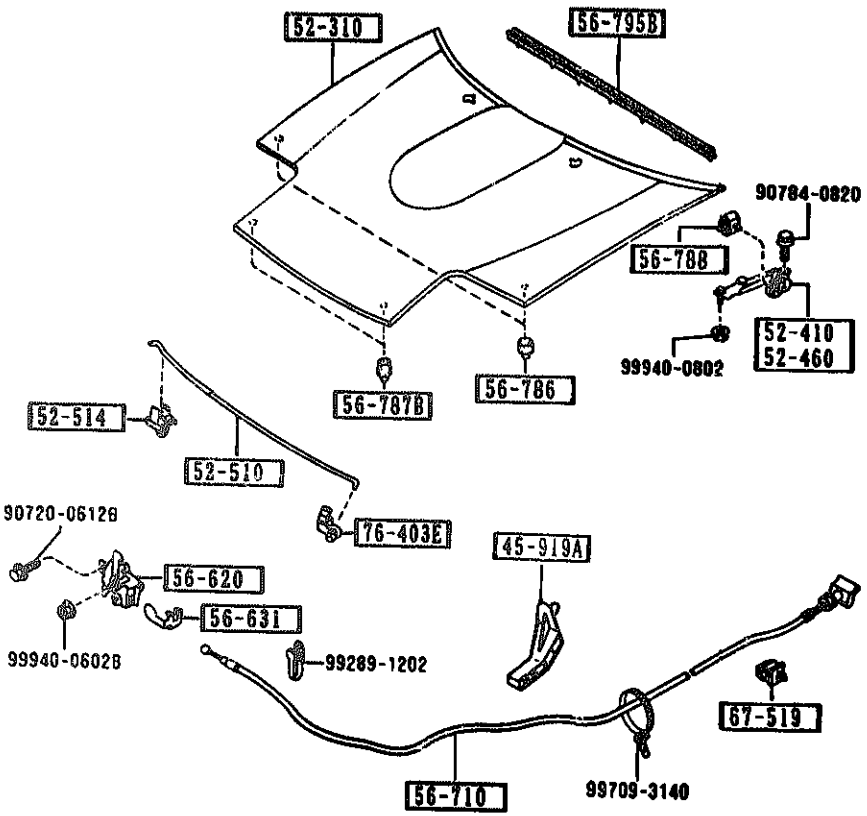

AUNA01

PART NO.	QTY	MODEL/RESTRICTION	MODEL/RESTRICTION	MODEL/RESTRICTION	FROM-TO
56-795B		WEATHERSTRIP,BONNET-REAR			
NA01-56-760	1				
67-519		CLIP,PIPE			
0030-67-519	1				
76-403E		HOLDER,ROD			
8092-52-518	1				

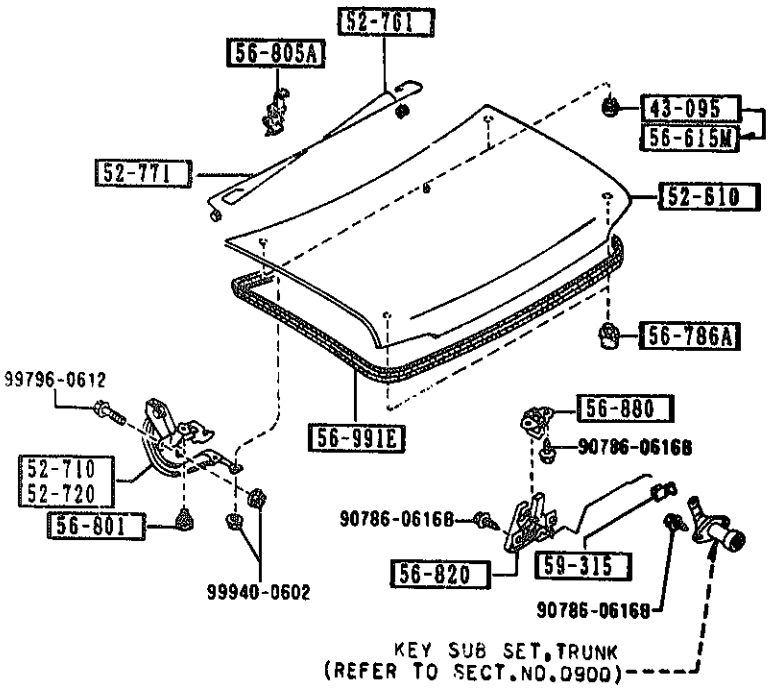

PART NO.	QTY	MODEL/RESTRICTION	MODEL/RESTRICTION	MODEL/RESTRICTION	FROM-TO
43-095		GROMMET			
H001-43-095	2				-9516
52-610		LID,TRUNK			
NAY1-52-610	1				
52-710		HINGE(R),TRUNK LID			
NA01-52-710	1				-9901
AN(NA01-52-710A)					
NA01-52-710A	1				9901-
52-720		HINGE(L),TRUNK LID			
NA01-52-720	1				-9901
AN(NA01-52-720A)					
NA01-52-720A	1				9901-
52-761		SPRING(R),BALANCE			
NA01-52-791A	1				
52-771		SPRING(L),BALANCE			
NA01-52-792A	1				
56-615M		PLUG,DRAIN			
NA01-56-651	2				9516-
56-786A		RUBBER,CUSHION			
NA71-56-784	2				-9A04
B481-56-786	2				9A04-
56-801		CUSHION,LID HINGE			
NA01-56-802	2				-9C01
NA01-56-803	2				9C01-
56-805A		HOLDER,BALANCE SPRING			
NA01-56-805	1				
56-820		LOCK,LID			
NA01-56-820	1				-9901
A (NA01-56-820A)					
NA01-56-820A	1				9901-

9516 NA35##-103924
9901 NA35##-119257
9A04 NA35##-123222
9C01 NA35##-130310

SECTION NAME INDEX (BODY)

LO NO	SEC.NO	SECTION NAME
2-C05	0900	KEY SETS
2-E05	5000	FRONT BUMPER
2-N05	5010	REAR BUMPER
2-J05	5030	WINDOW MOULDING & COWL GRILLES
2-L05	5100	HEAD LAMPS
2-M05	5103	HEAD LAMP RETRACTORS
2-D06	5105	FRONT COMBINATION LAMPS
2-F06	5110	REAR COMBINATION LAMPS
2-I06	5120	LICENSE LAMPS
2-J06	5180	REAR FINISHER
2-L06	5230	BONNET
2-N06	5260	TRUNK LID
2-D07	5310	BODY PANELS (FRONT)
2-E07	5320	BODY PANELS (FENDER & WHEEL APRON)
2-H07	5330	BODY PANELS (DASH & COWL PANEL)
2-I07	5340	BODY PANELS (SIDE)
2-C08	5370	BODY PANELS (FLOOR)
2-F08	5380	FLOOR ATTACHMENTS (HOLE COVERS)
2-G08	5390	FLOOR ATTACHMENTS
2-C09	5500	DASHBOARD EQUIPMENTS
2-E09	5520	METER HOOD
2-F09	5530	SPEEDOMETER CABLE
2-G09	5540	METER COMPONENTS
2-I09	5560	DASHBOARD & RELATED PARTS
2-L09	5570	CONSOLE
2-C10	5580	VENTILATOR
2-D10	5700	SEATS
2-K10	5790	SEAT BELTS
2-L10	5800	FRONT DOORS
2-C11	5830	FRONT DOOR MECHANISMS
2-F11	5840	FRONT DOOR TRIMS & RELATED PARTS
2-C12	6100	HEATER
2-D12	6110	HEATER UNIT COMPONENTS
2-E12	6115	HEATER CONTROLS COMPONENTS
2-F12	6120	HEATER BLOWER COMPONENTS
2-G12	6130	AIR CONDITIONER
2-K12	6135	O RING SET,PIPING
2-L12	6140	COMPRESSOR COMPONENTS (AIR CONDITIONER)
2-N12	6150	COOLING UNIT (AIR CONDITIONER)
2-C13	6300	WINDOW GLASSES
2-D13	6330	SUNROOF
2-M13	6600	SWITCHES & RELAYS (ENGINE)
2-D14	6610	DASHBOARD SWITCHES
2-E14	6611	COMBINATION SWITCH
2-F14	6630	RELAYS & UNIT (BODY)
2-G14	6635	DOOR SWITCH & HORNS
2-H14	6640	AUTO CRUISE CONTROL SYSTEM
2-[illegible]	6680	AUDIO SYSTEMS (RADIO & TAPE DECK)
2-K[illegible]	6682	AUDIO SYSTEMS (ANTENNA & SPEAKER)
2-L14	6700	WIRING HARNESSES(FRONT & REAR)
2-N14	6701	WIRING HARNESSES(ENGINE & T/MISSION)
2-D15	6702	WIRING HARNESSES(DASHBOARD)
2-E15	6703	WIRING HARNESSES(DOOR,FLOOR/CEILING)
2-F15	6704	WIRING HARNESS CLAMPS
2-I15	6720	WINDSHIELD WASHER
2-K15	6730	WINDSHIELD WIPERS
2-M15	6740	WIPER MOTOR COMPONENTS(FRONT)
2-N15	6820	FRONT HEADER TRIM & PILLAR TRIMS
2-C16	6840	TRIMS & SCUFF PLATES
2-E16	6860	FLOOR MATS & PADS
2-G16	6870	SERVICE TOOLS
2-H16	6900	VISORS,ASSIST HANDLES & MIRRORS
2-J16	6930	CAUTION PLATES & LABELS
2-L16	7250	QUARTER WINDOW & TRIMS
3-C03	7900	ACCESSORIES

CATLOG-NO= AUNA01-07

DATE. 1992-02

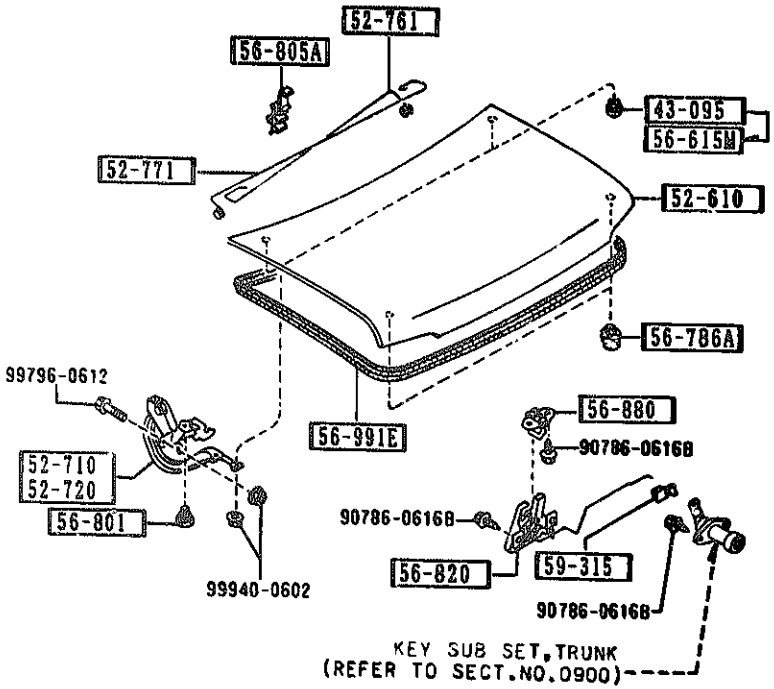

5260 -2 * TRUNK LID

PART NO.	QTY	MODEL/RESTRICTION	MODEL/RESTRICTION	MODEL/RESTRICTION	FROM-TO
56-880		STRIKER,LID			
NA01-56-840	1				
56-991E		WEATHERSTRIP,LID			
NA01-56-951	1				
59-315		CLIP			
G030-59-315	1				

5310 BODY PANELS (FRONT)

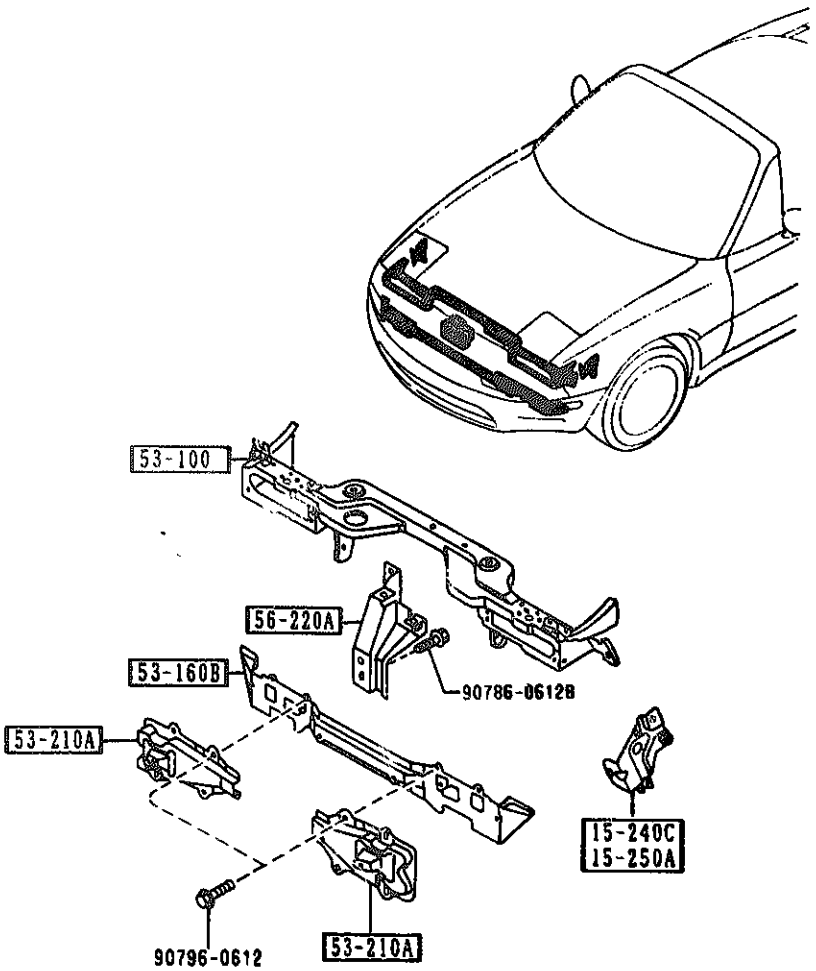

PART NO.	QTY	MODEL/RESTRICTION	MODEL/RESTRICTION	MODEL/RESTRICTION	FROM-TO
15-240C		BRACKET(R),RADIATOR			
B61P-15-240	1				
15-250A		BRACKET(L),RADIATOR			
B61P-15-250	1				
53-100		PANEL,RAD.SHROUD			
NA01-53-100B G (NA01-53-100D)	1				-9501
NA01-53-100D AN(NA01-53-100E)	1				9501-9801
NA01-53-100E A (NA01-53-100F)	1				9801-0401
NA01-53-100F	1				0401-
53-160B		MEMBER,CROSS			
NA01-53-16XA AN(NA01-53-16XB)	1				-9701
NA01-53-16XB A (NA01-53-16XC)	1				9701-0701
NA01-53-16XC	1				0701-
53-210A		BRACKET,BUMPER			
NA01-54-130	2				
56-220A		STAY,LOCK-BONNET			
NA01-56-221A AN(NA01-56-221B)	1				-9601
NA01-56-221B	1				9601-

9501 NA35##-102613
9601 NA35##-106797
9701 NA35##-111969
9801 NA35##-126490
0401 NA35##-146561
0701 NA35##-208041

AUNA01

5320 -1 BODY PANELS (FENDER & WHEEL APRON)

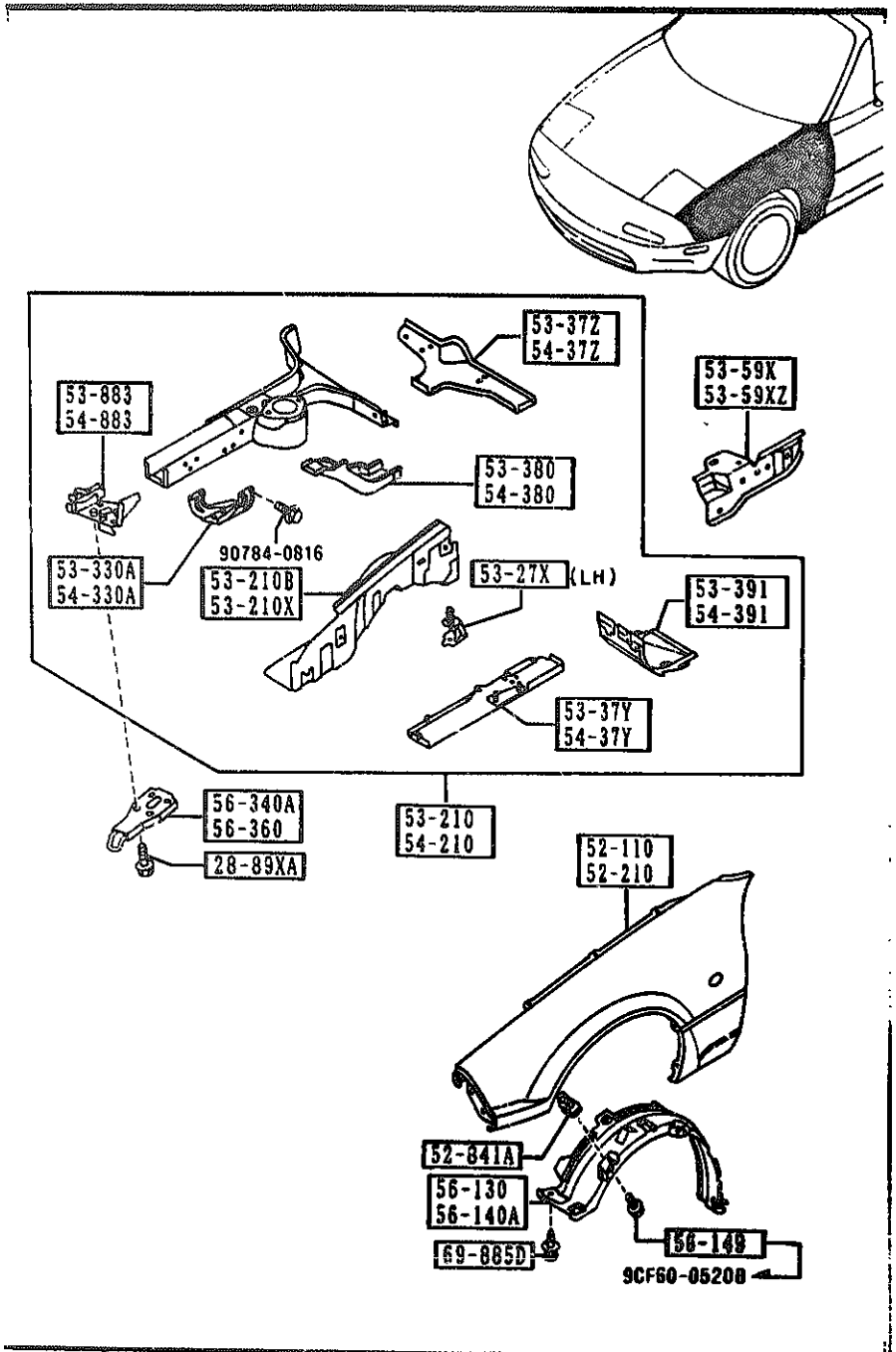

PART NO.	QTY	MODEL/RESTRICTION	MODEL/RESTRICTION	MODEL/RESTRICTION	FROM TO
28-89XA		BOLT,CROSS MEMBER			
GJ21-28-89X	6				
52-110		PANEL(R),FENDER-FRT.			
NAY1-52-110	1				
52-210		PANEL(L),FENDER-FRT.			
NAY1-52-210	1				
52-841A		NUT,CLIP			
LA01-56-135	10				
53-210		PANEL(R),WHEEL APRON			
NAY1-53-200	1				-0601
AN(NAY1-53-200A)					
NAY1-53-200A	1				0601-0701
C (NAY1-53-200B)					
NAY1-53-200B	1				0701-
53-210B		PANEL(R),WHEEL APRON			
NA01-53-210A	1				-0701
C (NA01-53-210B)					
NA01-53-210B	1				0701-
53-210X		PANEL(L),WHEEL APRON			
NA01-54-210A	1				-0701
C (NA01-54-210B)					
NA01-54-210B	1				0701-
53-27X		BRKT,AIR CLNR-WHL APRON			
NA01-54-36X	1				
53-330A		BRACKET(R),STABILIZER			
NA01-53-330	1				
53-37Y		FRAME(UP.,R),FRONT-FRT			
NA01-53-37Y	1				
53-37Z		FRAME(UP.R),FRONT-REAR			
NA01-53-37Z	1				-0701
NA01-53-37ZA	1				0701-

NAY1-53-200A
C NAY1-53-200B
B001-56-051
NA01-53-210A
C NA01-53-210B
B001-56-051 1
NA01-54-210A
C NA01-54-210B

B001-56-051 1 0601 NA35##-154752
90786-0614 1 0701 NA35##-200041

AUNA01

CAT. AUNA01-07

1992-02

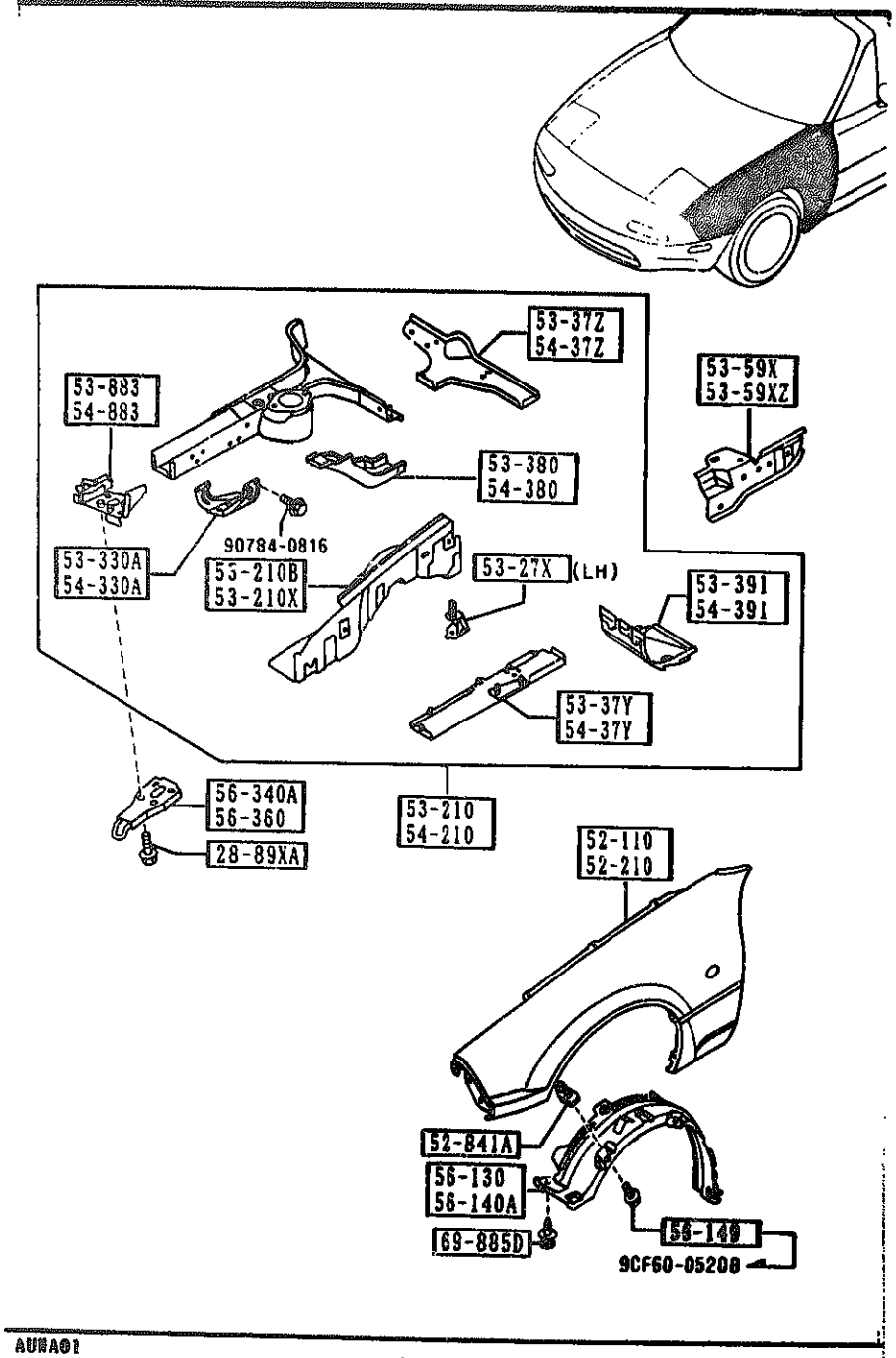

PART NO.	QTY	MODEL/RESTRICTION	MODEL/RESTRICTION	MODEL/RESTRICTION	FROM-TO
53-380		REINFORCEMENT(R)			
NA01-53-380	1				
53-391		BOX(R),TORQUE			
NA01-53-391	1				
53-59X		REINF.(R),WHEEL APRON			
NA01-53-591	1				
53-59XZ		REINF.(L),WHEEL APRON			
NA01-54-590	1				
53-883		REINF.(R),TIE DOWN HOOK			
NA01-53-32XA AN(NA01-53-32XB)	1				-9701
NA01-53-32XB	1				9701-
54-210		PANEL(L),WHEEL APRON			
NAY1-54-200 AN(NAY1-54-200A)	1				-0601
NAY1-54-200A C (NAY1-54-200B)	1				0601-0701
NAY1-54-200B	1				0701-
54-330A		BRACKET(L),STABILIZER			
NA01-54-330	1				
54-37Y		FRAME(UP.,L),FRONT-FRT			
NA01-54-37Y	1				
54-37Z		FRAME(UP.L),FRONT-REAR			
NA01-54-37ZA	1				
54-380		FRAME(L),FRONT-REAR			
NA01-54-380	1				
54-391		BOX(L),TORQUE			
NA01-54-391	1				
54-883		REINF.(L),TIE DOWN HOOK			
NA01-54-32XA AN(NA01-54-32XB)	1				-9701

NAY1-54-200A 9701 NA35##-111969
C NAY1-54-200B 0601 NA35##-154752
B001-56-051 0701 NA35##-200041
90786-0616

5320 -3 M BODY PANELS (FENDER & WHEEL APRON)

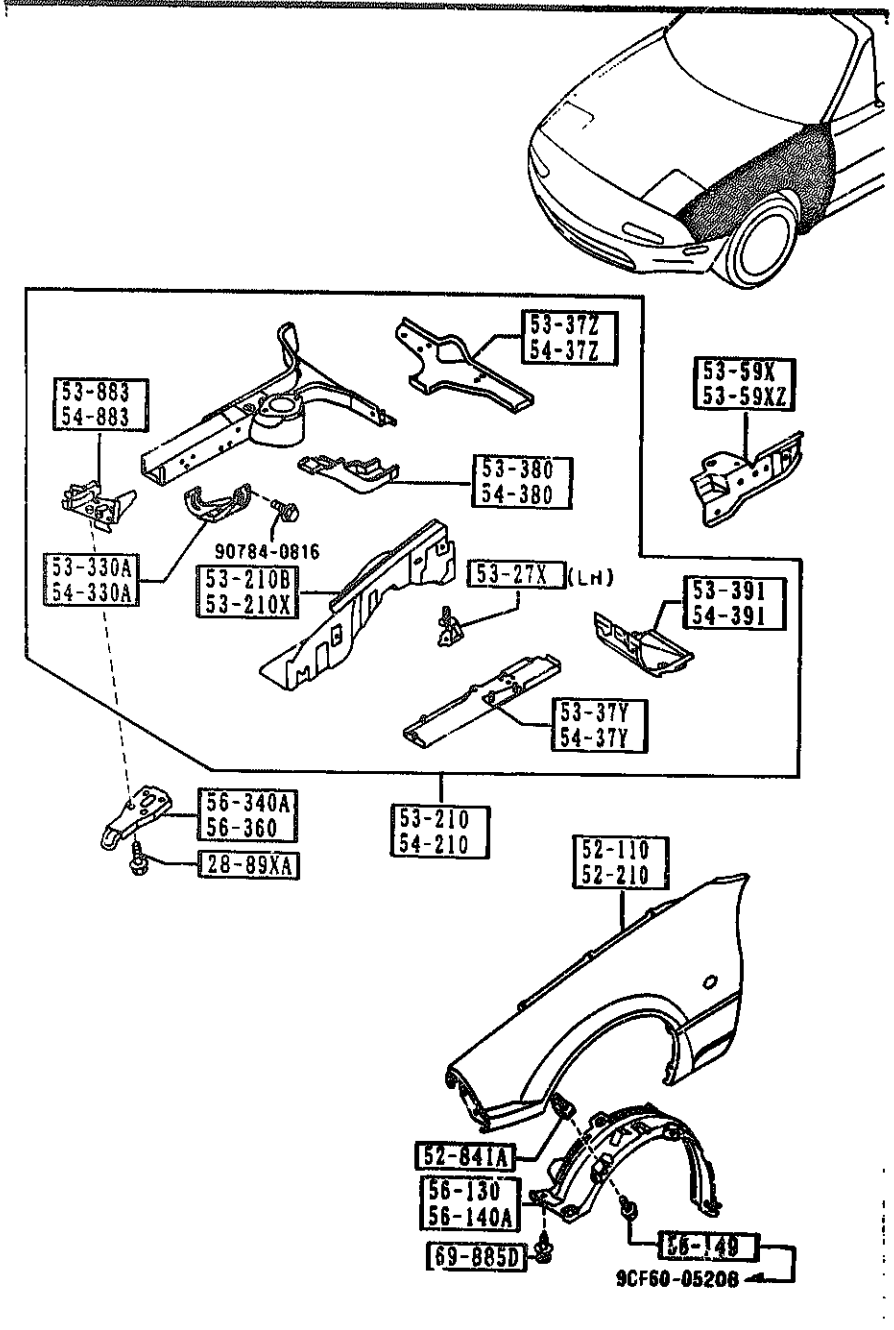

PART NO.	QTY	MODEL/RESTRICTION	MODEL/RESTRICTION	MODEL/RESTRICTION	FROM-TO
CONT'D					
NA01-56-32XB	1				9701-0601
▲ (NA01-56-32XC)					
NA01-56-32XC	1				0601-
56-130		GUARD(R),MUD			
NA01-56-131A	1				
56-140A		GUARD(L),MUD			
NA01-56-141A	1				-0703
A (NA01-56-141C)					
NA01-56-141C	1				0703-
56-149		SCREW,TAPPING-MUD GUARD			
B455-56-149	10				-9C20
56-340A		HOOK(R),TIE DOWN-FRONT			
NA01-56-34XA	1				-9621
AN(NA01-56-34XC)					
NA01-56-34XC	1				9621-
56-360		HOOK(L),TIE DOWN-FRONT			
NA01-56-34YA	1				-9621
AN(NA01-56-34YC)					
NA01-56-34YC	1				9621-
69-885D		FASTENER			
NA01-56-145	10				

9621 NA35##-110426
9701 NA35##-111969
9C20 NA35##-132500
0601 NA35##-154752
0703 NA35##-200041
NA35##-200204

5330 -1 * BODY PANELS (DASH & COWL PANEL)

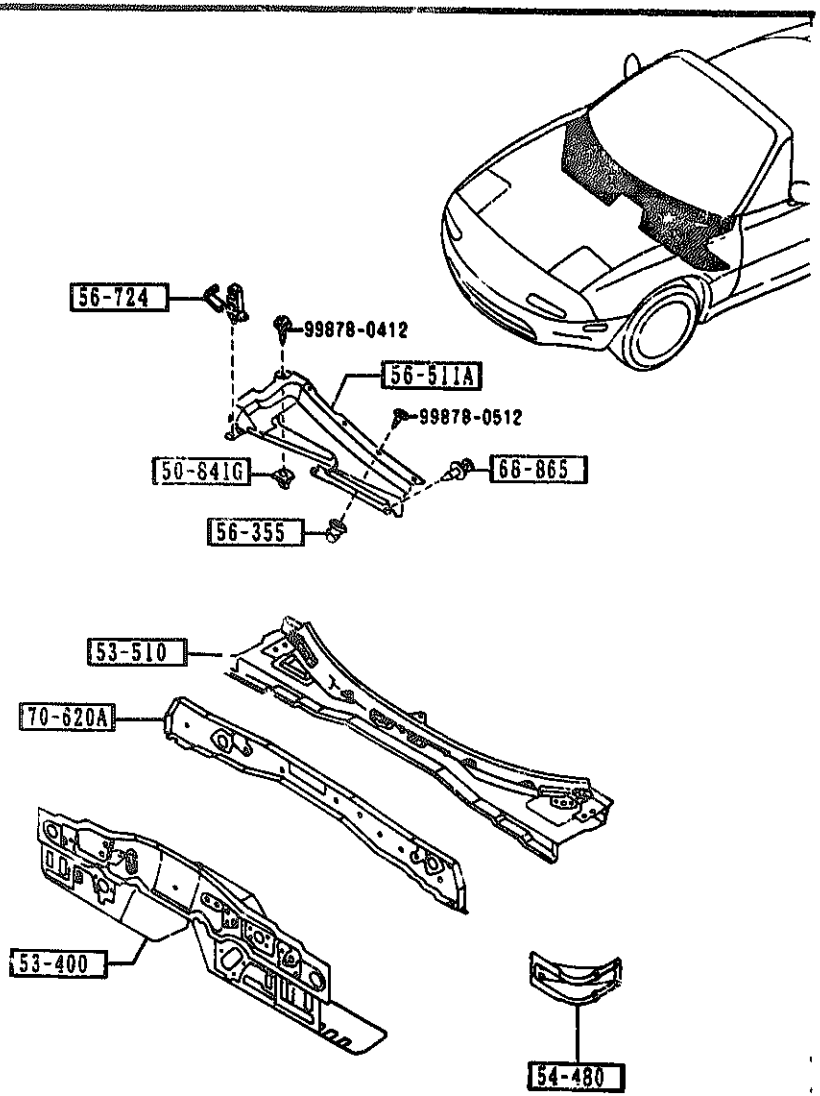

PART NO.	QTY	MODEL/RESTRICTION	MODEL/RESTRICTION	MODEL/RESTRICTION	FROM-TO
50-8410		GROMMET,SCREW			
F044-51-912	1				
53-400		PANEL,DASH-LOWER			
NA01-54-400B A (NA01-54-400D)	1				-9401
NA01-54-400D AN(NA01-54-400E)	1				9401-9601
NA01-54-400E (NA01-54-400G)	1				9601-9801
NA01-54-400G	1				9801-
53-510		PANEL,DASH-UPPER			
NA01-53-510 AN(NA01-53-510A)	1				-9413
NA01-53-510A A (NA01-53-510D)	1				9413-9701
NA01-53-510D	1				9701-
54-480		JUNCTION,DASH SIDE-S .SILL			
NAC1-54-480	2				
56-355		GROMMET,SCREW-BAFFLE			
G211-56-355A	4				
56-511A		COVER,BAFFLE-COWL PA NEL			
NA01-56-351	1				
56-724		CLIP'B',WIRE-BONNET			
H260-56-724	1				
68-865		FASTENER			
B040-68-865A	2				
00		NA0 BLACK			
70-620A		PANEL,COWL-FRONT			
NA01-70-62YA	1				-0701
NA01-70-62YB	1				0701-

9401 NA35##-100090
9413 NA35##-100900
9601 NA35##-106797
9701 NA35##-111969
9801 NA35##-116316
0701 NA35##-200041

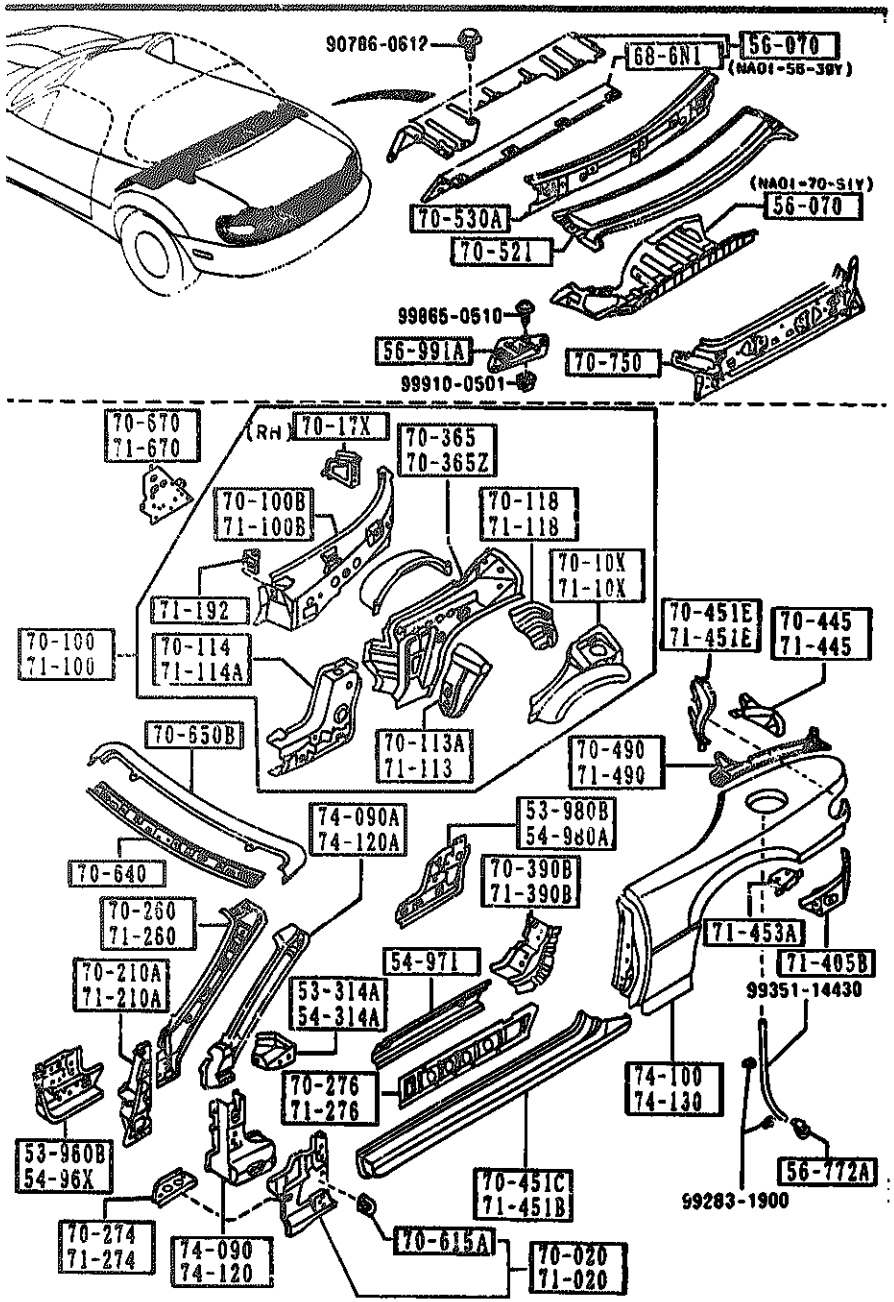

AUNA01

5340 -1 BODY PANELS (SIDE)

PART NO.	QTY	MODEL/RESTRICTION	MODEL/RESTRICTION	MODEL/RESTRICTION	FROM-TO
53-314A		BRACKET(R),INST.			
NA01-70-071 G (NA01-70-071A)	1				-9901
NA01-70-071A	1				9901-
53-960B		SILL(FRT.R),SIDE-INNER			
NA01-53-960A A (NA01-53-960B)	1				-0101
NA01-53-960B	1				0101-
53-980B		SILL(RR.R),SIDE-INNER			
NA01-53-980 G (NA01-53-980B)	1				-9801
NA01-53-980B	1				9801-
54-314A		BRACKET(L),INST.			
NA01-71-071 G (NA01-71-071A)	1				-9901
NA01-71-071A	1				9901-
54-96X		SILL(FRT.L),SIDE-INNER			
NA01-54-96XA A (NA01-54-96XB)	1				-0101
NA01-54-96XB	1				0101-
54-971		SILL(C),SIDE-INNER			
NA01-54-971	2				
54-980A		SILL(RR.L),SIDE-INNER			
NA01-54-980 G (NA01-54-980B)	1				-9801
NA01-54-980B	1				9801-
56-070		PANEL,BULK HEAD			
NA01-56-39Y	1				
NA01-70-51Y	1				
56-772A		PIPE,DRAIN-RR FENDER			
NA01-56-772	1				
56-991A		COVER,SERVICE HOLE			
NA01-56-971	1				

9801 NA35##-116316
9901 NA35##-119257
0101 NA35##-133591

CAT. AUNA01-07

1992-02

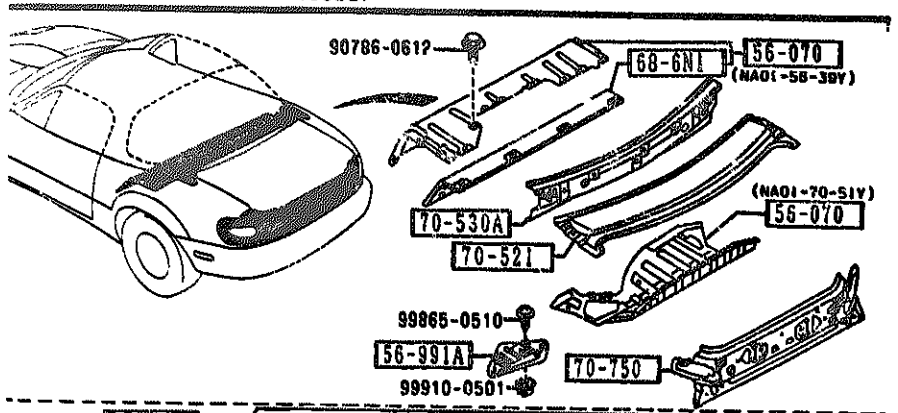

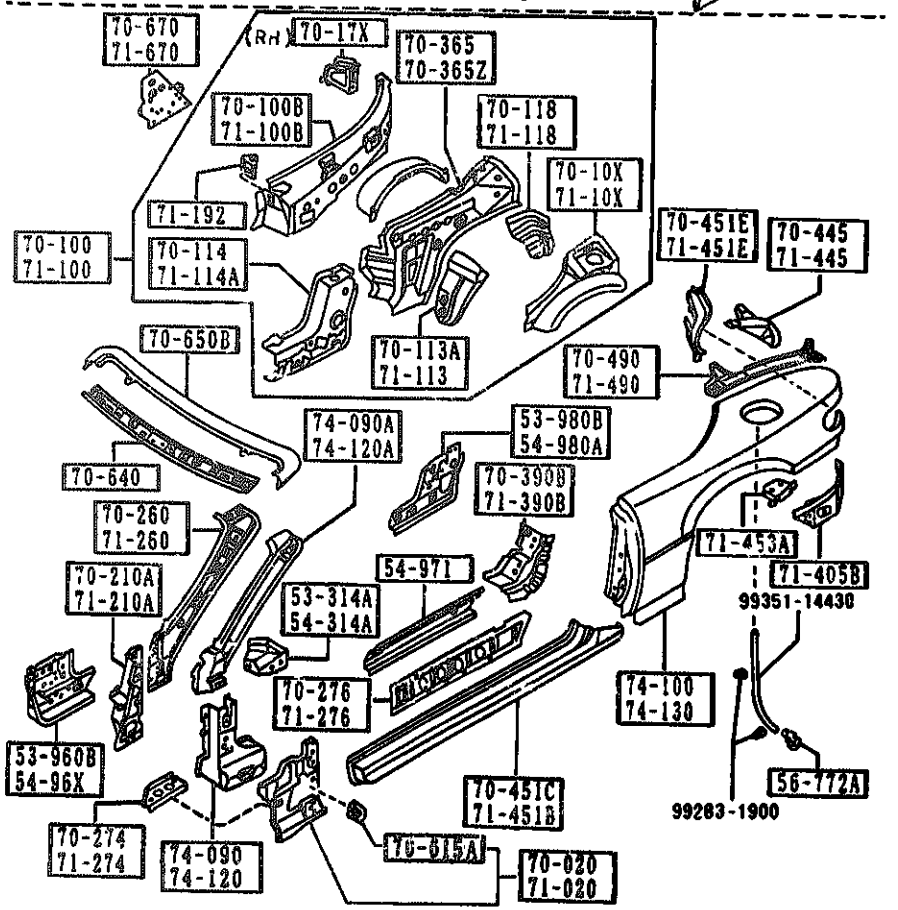

PART NO.	QTY	MODEL/RESTRICTION	MODEL/RESTRICTION	MODEL/RESTRICTION	FROM-TO
68-6N1		INSULATOR,BALK HEAD PANEL			
NA01-68-6N1	1				
70-020		PANEL(R),COWL SIDE			
NA01-70-020B	1				
70-10X		PANEL(R),QUARTER			
NA01-70-111	1				
AN(NA01-70-111A)					-9701
NA01-70-111A	1				9701-
70-100		PANEL(R),QUARTER			
NA01-70-100D	1				
AN(NA01-70-10 E)					-9701
NA01-70-100E	1				9701-9901
G (NA01-70-100F)					
NA01-70-100F	1				9901-9C01
AN(NA01-70-100G)					
NA01-70-100G	1				9C01-
70-100B		PANEL(R),INSIDE			
NA01-70-19XB	1				
70-113A		PLATE(R),SEAL			
NA01-70-11Z	1				
70-114		PLATE(R),END			
NA01-70-12XA	1				
70-118		PROTECTOR(R),SPLASH			
NA01-70-15X	1				
70-17X		BRKT,BATT.CLAMP-QTR PANEL			
NA01-70-17X	1				
AN(NA01-70-17XA)					-9C01
NA01-70-17XA	1				9C01-
70-210A		PILLAR(R),HINGE			
NA01-70-230	1				
70-260		PILLAR(R),FRT.-INNER			
NA01-70-240A	1				-9901

9701 NA35MM-111969
9901 NA35MM-119257
9C01 NA35MM-130310

5340 -3 BODY PANELS (SIDE)

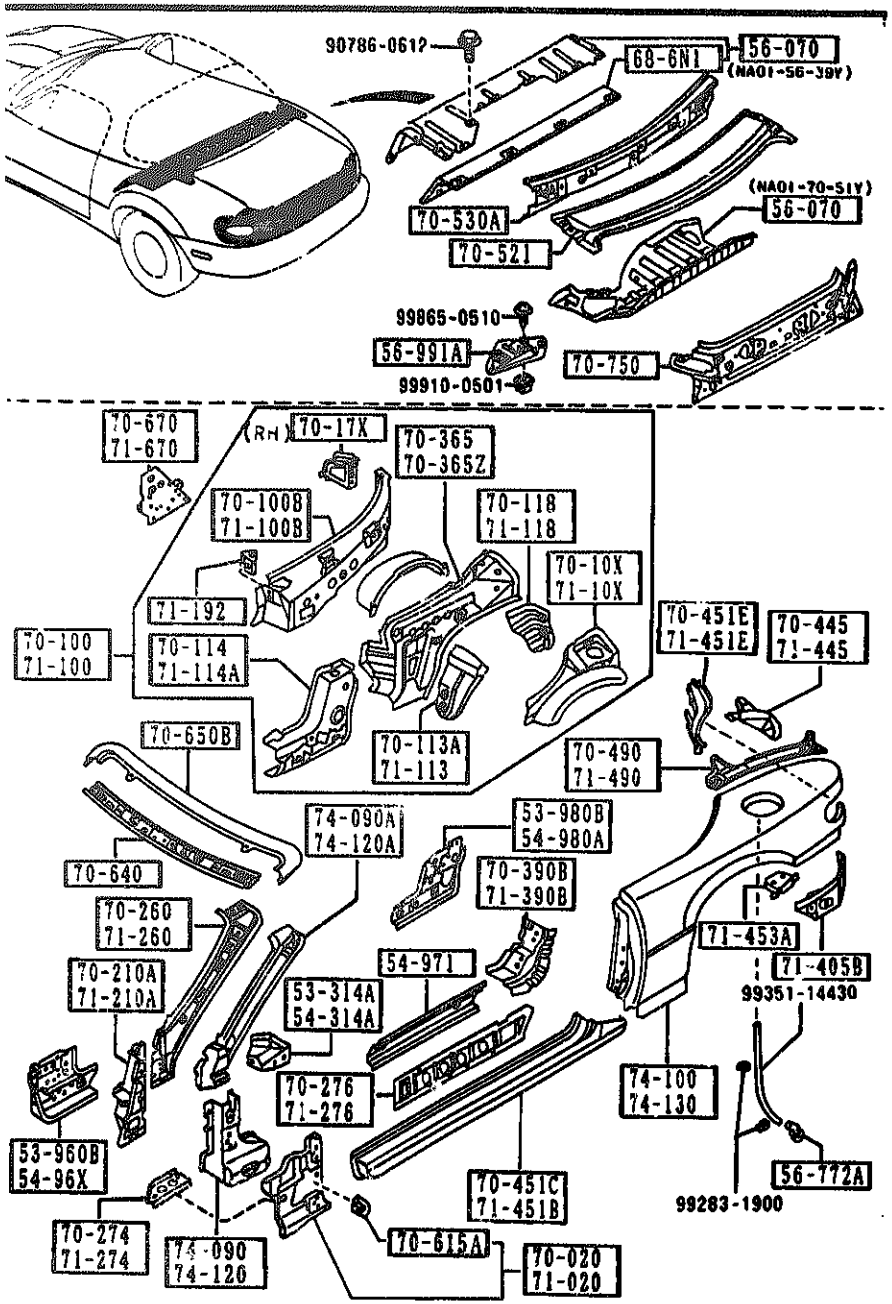

PART NO.	QTY	MODEL/RESTRICTION	MODEL/RESTRICTION	MODEL/RESTRICTION	FROM-TO
CONT'D					
G (NA01-70-240B)					
NA01-70-240B	1				9901-
70-274		GUSSET(R),SIDE SILL OUTER			
NA01-70-274	1				
70-276		REINF.(R),SIDE SILL			
NA01-70-275	1				
70-365		REINF.(R),BELT LINE-C.PIL			
NA01-70-116A	1				
70-365Z		REINF.(L),BELT LINE-C.PIL			
NA01-71-116B	1				
70-390B		REINF.(R),STRIKER			
NA01-70-460	1				
70-445		GUSSET(R),REAR FENDER-RR			
NA01-70-445	1				
70-451C		SILL(R),SIDE OUT.			
NA01-70-270A	1				-9801
AN(NA01-70-270B)					
NA01-70-270B	1				9801-
70-451E		HOUSING(R),LAMP-RR FENDER			
NA01-70-J30	1				
70-490		RAIL(R),RAIN-REAR			
NA01-70-440A	1				
70-521		PANEL,REAR DECK			
NA01-70-521	1				-9330
A (NA01-70-521A)					
NA01-70-521A	1				9330-
70-530A		MEMBER,REAR DECK			
NA01-70-530A	1				
70-615A		BRACKET,FENDER			

9330 NA35##-100072
9801 NA35##-116316
9901 NA35##-119257

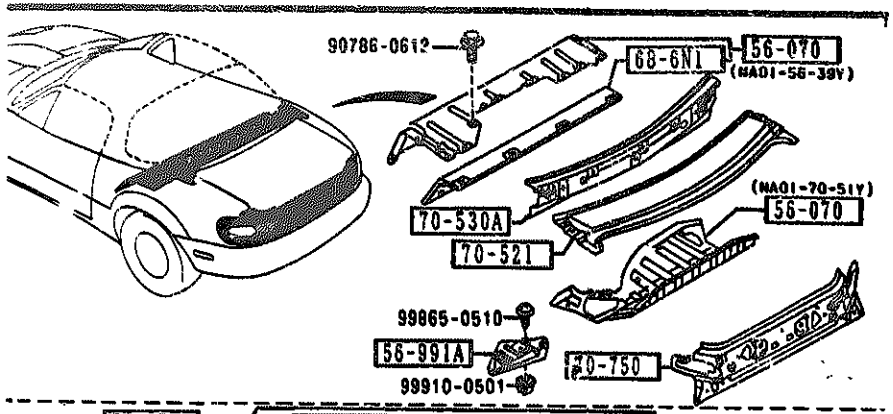

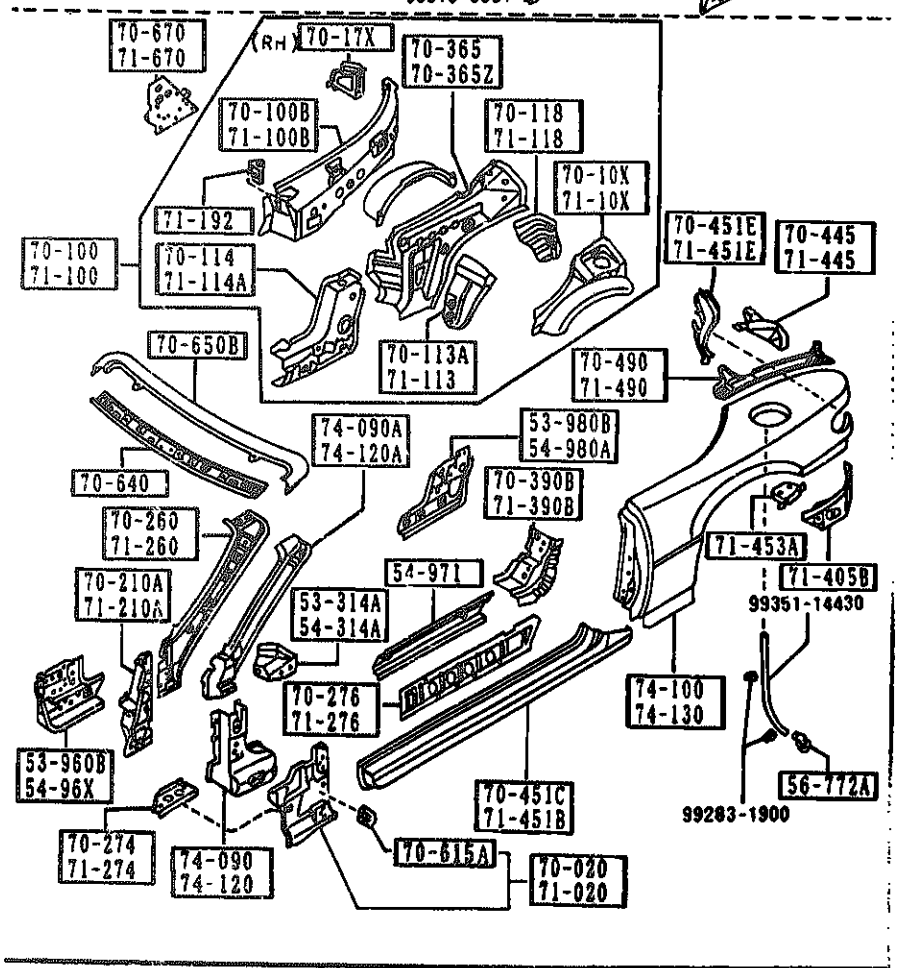

PART NO.	QTY	MODEL/RESTRICTION	MODEL/RESTRICTION	MODEL/RESTRICTION	FROM-TO
CONT'D					
8092-70-070A	2				
70-640		HEADER,FRONT			
NA01-70-640	1				
70-650B		HEADER,FRONT-UPPER			
NA01-70-650	1				
70-670		PLATE(R),CLOSING-QTR PANEL			
NA01-70-670	1				
70-750		PANEL,REAR END			
NA01-70-750C	1				-9501
A (NA01-70-750D)					
NA01-70-750D	1				9501-9905
G (NA01-70-750E)					
NA01-70-750E	1				9905-0601
AN(NA01-70-750F)					
NA01-70-750F	1				0601-
71-020		PANEL(L),COWL SIDE			
NA01-71-020B	1				
71-10X		PANEL(L),QUARTER			
NA01-71-11X	1				-0321
AN(NA01-71-11XA)					
NA01-71-11XA	1				0321-
71-100		PANEL(L),QUARTER			
NA01-71-100E	1				-9701
AN(NA01-71-100F)					
NA01-71-100F	1				9701-9901
G (NA01-71-100G)					
NA01-71-100G	1				9901-
71-100B		PANEL(L),INSIDE			
NA01-71-19XB	1				
71-113		PLATE(L),SEAL			
NA01-71-11Z	1				
71-114A		JUNCTION(L),CORNER-Q /PANE			

9501 NA35##-102613
9701 NA35##-111969
9901 NA35##-119257
9905 NA35##-119643
0321 NA35##-145170
0601 NA35##-154752

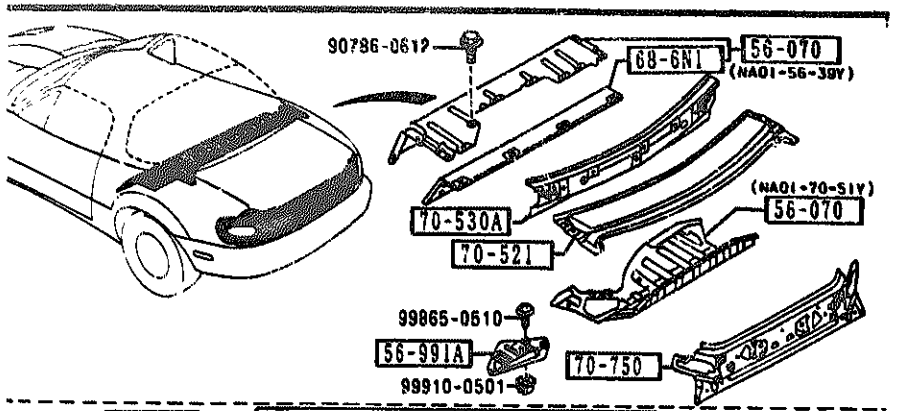

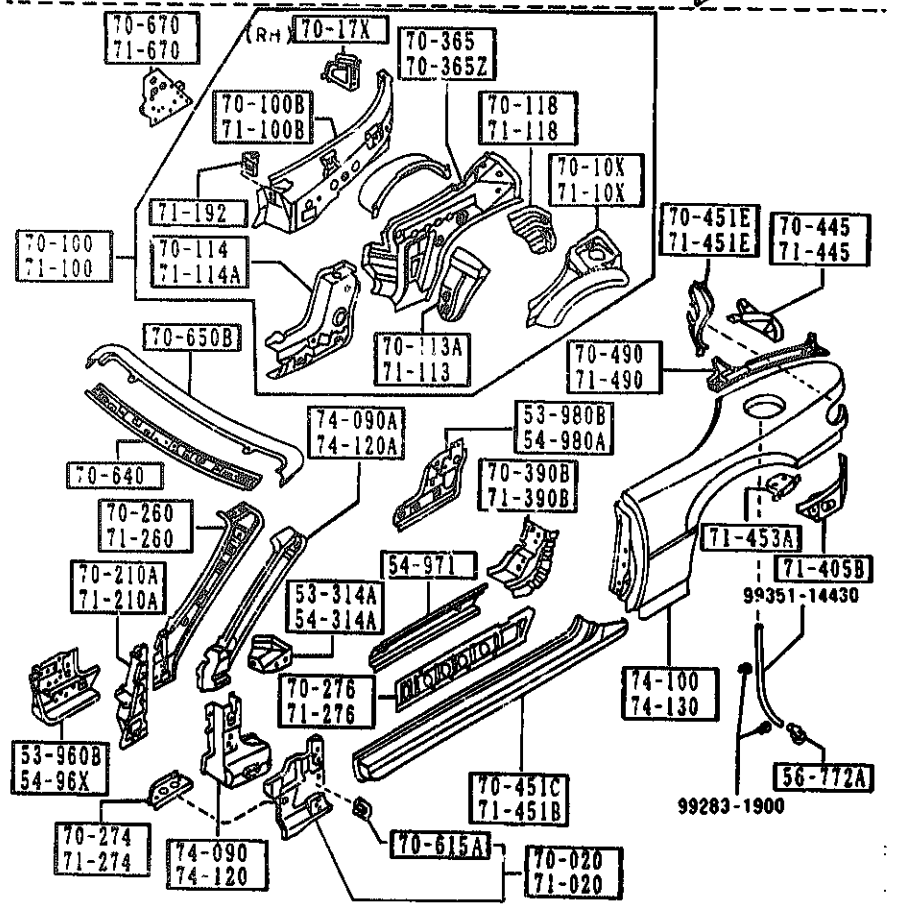

PART NO.	QTY	MODEL/RESTRICTION	MODEL/RESTRICTION	MODEL/RESTRICTION	FROM-TO
CONT'D					
NA01-71-12XA	1				
71-118		PROTECTOR(L),SPLASH			
NA01-71-15X AN(NA01-71-15XA)	1				-0321
NA01-71-15XA	1				0321-
71-192		BRKT,CAP-QUARTER PANEL			
NA01-71-192	2				
71-210A		PILLAR(L),HINGE			
NA01-71-230	1				
71-260		PILLAR(L),FRT.-INNER			
NA01-71-240A G (NA01-71-240B)	1				-9901
NA01-71-240B	1				9901-
71-274		GUSSET(L),SIDE SILL OUTER			
NA01-71-274	1				
71-276		REINF.(L),SIDE SILL			
NA01-71-275	1				
71-390B		REINF.(L),STRIKER			
NA01-71-460	1				
71-405B		PANEL(L),RR FENDER-LOWER			
NA01-71-421	1				
71-445		GUSSET(L),REAR FENDER-RR			
NA01-71-445	1				
71-451B		SILL(L),SIDE OUT.			
NA01-71-270A AN(NA01-71-270B)	1				-9801
NA01-71-270B	1				9801-
71-451E		HOUSING(L),LAMP-RR FENDER			
NA01-71-J30	1				

9801 NA35##-116316
9901 NA35##-119257
0321 NA35##-145170

5340 BODY PANELS (SIDE)

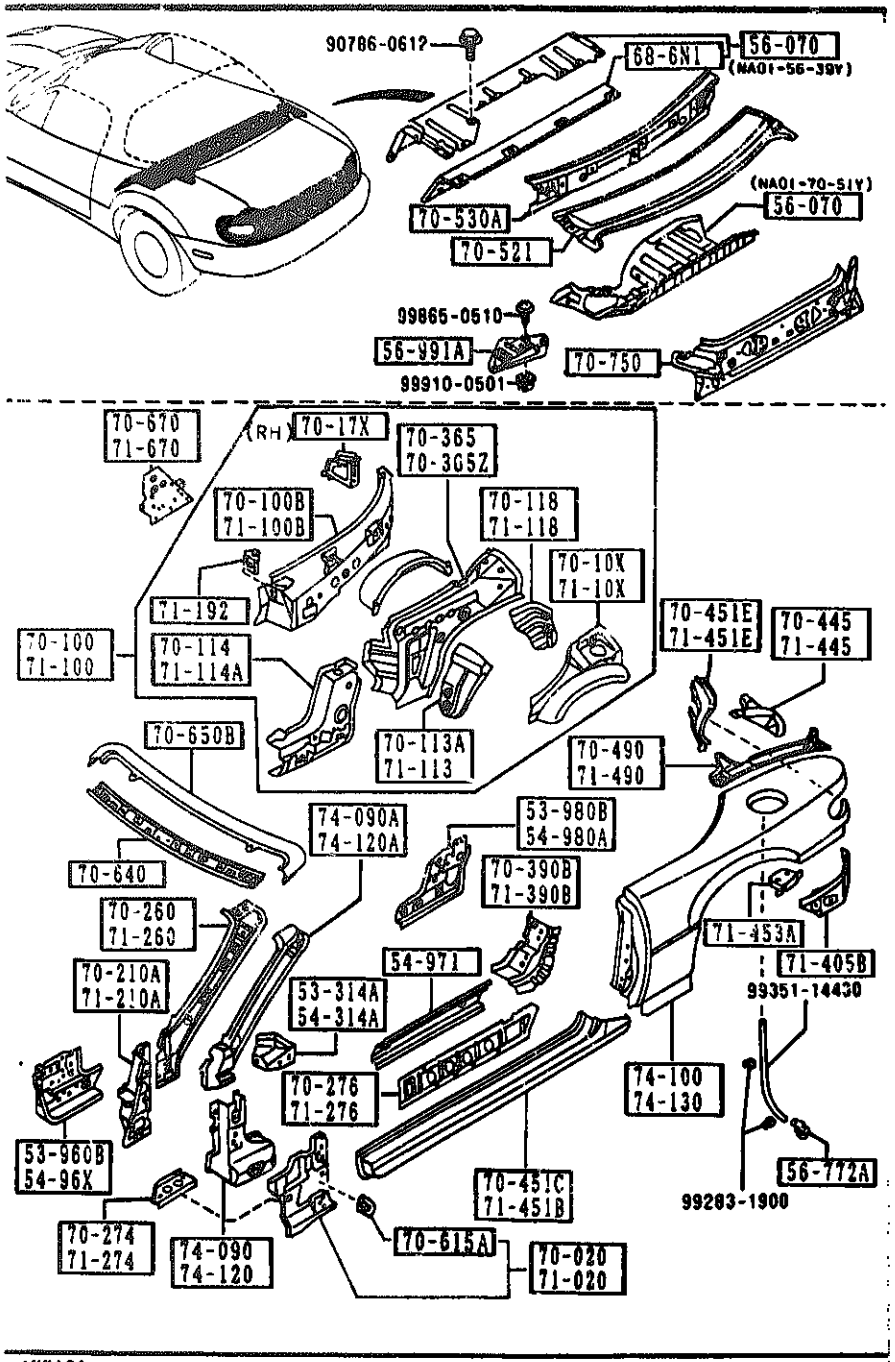

AUNA01

PART NO.	QTY	MODEL/RESTRICTION	MODEL/RESTRICTION	MODEL/RESTRICTION	FROM-TO
71-453A		BRKT(L),TRK.BOARD-FENDER			
NA01-71-453	1				
71-490		RAIL(L),RAIN-REAR			
NA01-71-440A	1				
71-670		PLATE(L),CLOSING-QTR PANEL			
NA01-71-670	1				
74-090		PILLAR(R),HINGE-OUT.			
NA01-70-280B	1				
74-090A		PILLAR(R),FRONT-OUT.			
NA01-70-210	1				
74-100		PANEL(R),FENDER-REAR			
NAY1-70-400 A (NAY1-70-400A)	1				-9330
NAY1-70-400A	1				9330-
74-120		PILLAR(L),HINGE-OUT.			
NA01-71-280B	1				
74-120A		PILLAR(L),FRONT-OUT.			
NA01-71-210	1				
74-130		PANEL(L),FENDER-REAR			
NAY1-71-400 A (NAY1-71-400A)	1				-9330
NAY1-71-400A	1				9330-

9330 NA35MM-100072

CAT. AUNA01-07

1992-02

SECTION NAME INDEX (BODY)

LO.NO	SEC.NO	SECTION NAME
2-C05	0900	KEY SETS
2-E05	5000	FRONT BUMPER
2-H05	5010	REAR BUMPER
2-J05	5030	WINDOW MOULDING & COWL GRILLES
2-L05	5100	HEAD LAMPS
2-M05	5103	HEAD LAMP RETRACTORS
2-D06	5105	FRONT COMBINATION LAMPS
2-F06	5110	REAR COMBINATION LAMPS
2-I06	5120	LICENSE LAMPS
2-J06	5180	REAR FINISHER
2-L06	5230	BONNET
2-N06	5260	TRUNK LID
2-D07	5310	BODY PANELS (FRONT)
2-E07	5320	BODY PANELS (FENDER & WHEEL APRON)
2-H07	5330	BODY PANELS (DASH & COWL PANEL)
2-I07	5340	BODY PANELS (SIDE)
2-C08	5370	BODY PANELS (FLOOR)
2-F08	5380	FLOOR ATTACHMENTS (HOLE COVERS)
2-G08	5390	FLOOR ATTACHMENTS
2-C09	5500	DASHBOARD EQUIPMENTS
2-E09	5520	METER HOOD
2-F09	5530	SPEEDOMETER CABLE
2-G09	5540	METER COMPONENTS
2-I09	5560	DASHBOARD & RELATED PARTS
2-L09	5570	CONSOLE
2-C10	5580	VENTILATOR
2-D10	5700	SEATS
2-K10	5790	SEAT BELTS
2-L10	5800	FRONT DOORS
2-C11	5830	FRONT DOOR MECHANISMS
2-F11	5840	FRONT DOOR TRIMS & RELATED PARTS
2-C12	6100	HEATER
2-D12	6110	HEATER UNIT COMPONENTS
2-E12	6115	HEATER CONTROLS COMPONENTS
2-F12	6120	HEATER BLOWER COMPONENTS
2-G12	6130	AIR CONDITIONER
2-K12	6135	O RING SET,PIPING
2-L12	6140	COMPRESSOR COMPONENTS (AIR CONDITIONER)
2-N12	6150	COOLING UNIT (AIR CONDITIONER)
2-C13	6300	WINDOW GLASSES
2-D13	6330	SUNROOF
2-M13	6600	SWITCHES & RELAYS (ENGINE)
2-D14	6610	DASHBOARD SWITCHES
2-E14	6611	COMBINATION SWITCH
2-F14	6630	RELAYS & UNIT (BODY)
2-G14	6635	DOOR SWITCH & HORNS
2-H14	6640	AUTO CRUISE CONTROL SYSTEM
2-I14	6680	AUDIO SYSTEMS (RADIO & TAPE DECK)
2-K14	6682	AUDIO SYSTEMS (ANTENNA & SPEAKER)
2-L14	6700	WIRING HARNESSES(FRONT & REAR)
2-	6701	WIRING HARNESSES(ENGINE & T/MISSION)
2-D15	6702	WIRING HARNESSES(DASHBOARD)
2-E15	6703	WIRING HARNESSES(DOOR,FLOOR/CEILING)
2-F15	6704	WIRING HARNESS CLAMPS
2-I15	6720	WINDSHIELD WASHER
2-K15	6730	WINDSHIELD WIPERS
2-M15	6740	WIPER MOTOR COMPONENTS(FRONT)
2-N15	6820	FRONT HEADER TRIM & PILLAR TRIMS
2-C16	6840	TRIMS & SCUFF PLATES
2-E16	6860	FLOOR MATS & PADS
2-G16	6870	SERVICE TOOLS
2-H16	6900	VISORS,ASSIST HANDLES & MIRRORS
2-J16	6930	CAUTION PLATES & LABELS
2-L16	7250	QUARTER WINDOW & TRIMS
3-C03	7900	ACCESSORIES

CATLOG-NO= AUNA01-07

DATE. 1992-02

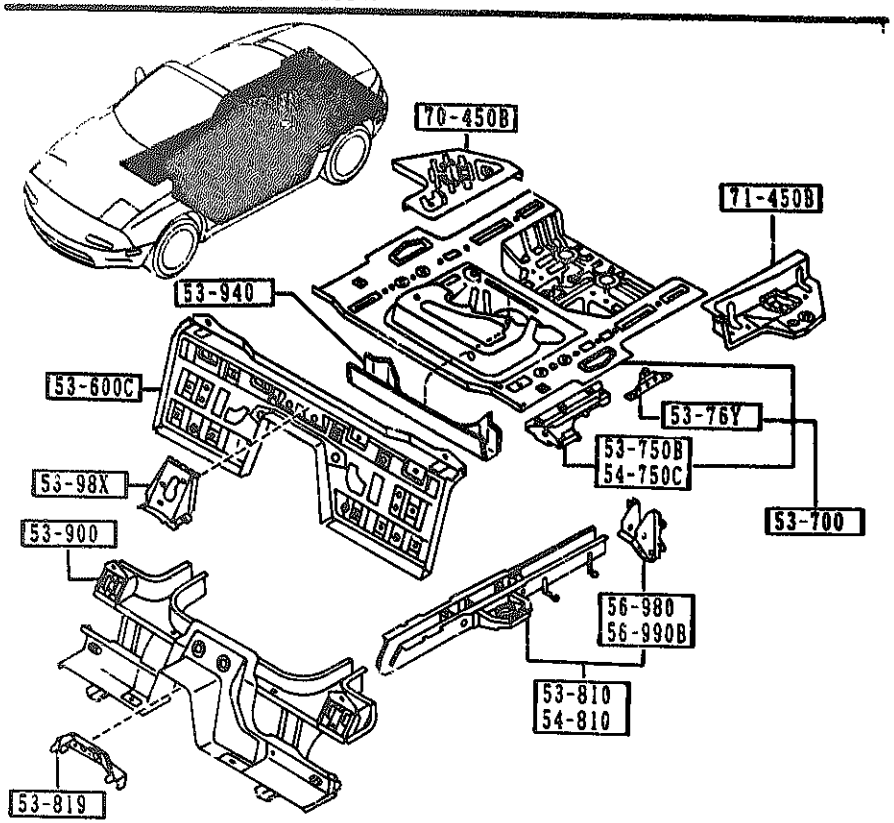

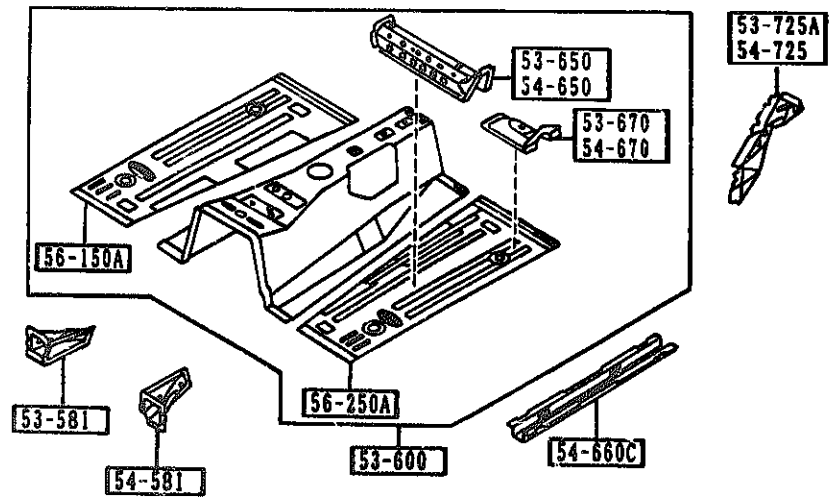

AUNA01

PART NO.	QTY	MODEL/RESTRICTION	MODEL/RESTRICTION	MODEL/RESTRICTION	FROM-TO
53-581		JUNCTION(R),FRT. FLOOR			
NA01-53-482	1				
53-600		PAN,FLOOR-FRONT			
NA01-53-600 A (NA01-53-600A)	1				-0501
NA01-53-600A	1				0501-
53-600C		PAN,FLOOR-CENTER			
NA01-53-720	1				
53-650		MEMBER NO.2(R),CROSS-FLOOR			
NA01-53-650	1				
53-670		BRKT(R),SEAT-F.FLOOR PAN			
NA01-53-670	1				
53-700		PAN,FLOOR-REAR			
NA01-53-710A C (NA01-53-710B)	1				-0701
NA01-53-710B	1				0701-
53-725A		GUSSET NO.3(R),C.FLOOR PAN			
NA01-53-725A	1				
53-750B		PLATE(R),SIDE-REAR FLOOR			
NA01-53-750	1				
53-76Y		PLATE,NUT-TRUNK FLOOR PAN			
NA01-53-760	2				
53-810		FRAME(R),REAR SIDE			
NA01-53-810C G (NA01-53-810D)	1				-9901
NA01-53-810D	1				9901-
53-819		BRACKET,PARKING CABLE-FLOOR			
NA01-53-819	1				
53-900		MEMBER NO.3,CROSS			
NA01-53-900	1				

NA01-53-710A 9901 NA35WN-119257
C NA01-53-710B 0501 NA35WN-150679
B001-56-051 2 0701 NA35WN-200061

CAT. AUNA01-07

1992-02

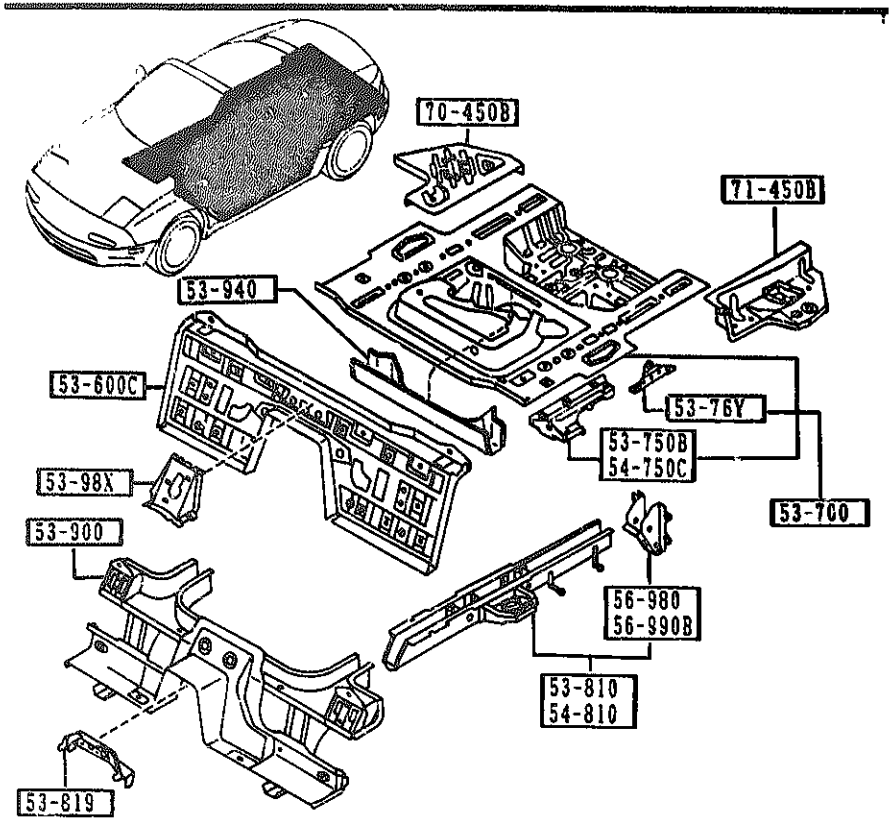

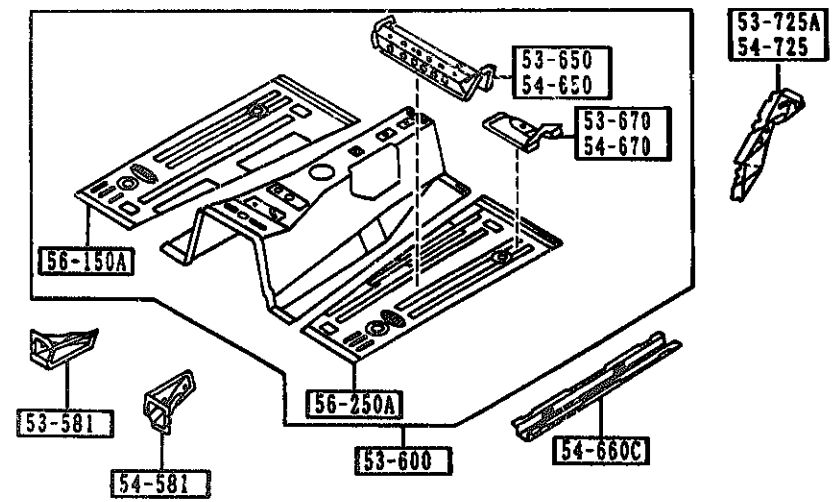

AUNA01

PART NO.	QTY	MODEL/RESTRICTION	MODEL/RESTRICTION	MODEL/RESTRICTION	FROM-TO
53-940		MEMBER NO.4,CROSS			
NA01-53-931	1				
53-98X		GUSSET,FRONT FLOOR PAN			
NA01-53-880	1				
54-581		JUNCTION(L),FRT. FLOOR			
NA01-54-482	1				
54-650		MEMBER NO.2(L),CROSS-FLOOR			
NA01-54-650	1				
54-660C		FRAME,FRONT-FRT FLOOR PAN			
NA01-54-660	2				
54-670		BRKT(L),SEAT-F.FLOOR PAN			
NA01-54-670	1				
54-725		GUSSET NO.3(L),C.FLOOR PAN			
NA01-54-725A	1				
54-750C		PLATE(L),SIDE-REAR FLOOR			
NA01-54-750	1				
54-810		FRAME(L),REAR SIDE			
NA01-54-810C G (NA01-54-810D)	1				-9901
NA01-54-810D	1				9901-
56-150A		PAN(R),FLOOR			
NA01-53-602	1				
56-250A		PAN(L),FLOOR			
NA01-54-610	1				
56-980		BRKT(R),BUMPER-RR SKIRT			
NA01-53-830A A (NA01-53-830C)	1				-9330
NA01-53-830C	1				9330-
56-9908		BRKT(L),BUMPER-RR SKIRT			

9330 NA35##-100072
9901 NA35##-119257

CAT. AUNA01-07

1992-02

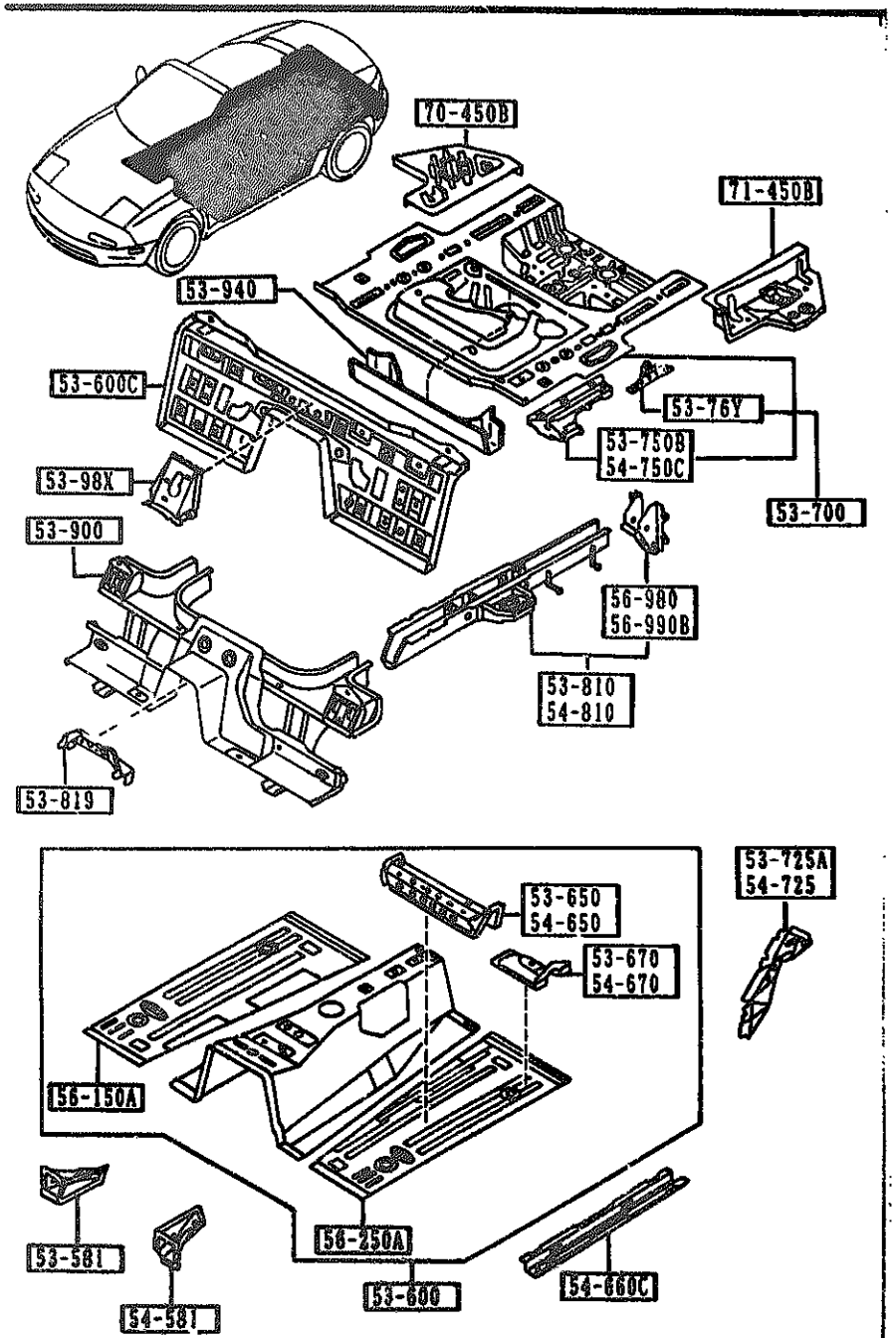

PART NO.	QTY	MODEL/RESTRICTION	MODEL/RESTRICTION	MODEL/RESTRICTION	FROM-TO
CONT'D					
NA01-54-830A A (NA01-54-830C)	1				-9330
NA01-54-830C	1				9330-
70-450B		PANEL(R),FLOOR SIDE			
NA01-53-740B	1				
71-4503		PANEL(L),FLOOR SIDE			
NA01-54-740 AN(NA01-54-740A)	1				-9801
NA01-54-740A	1				9801-

9330 NA35**-100072
9801 NA35**-116316

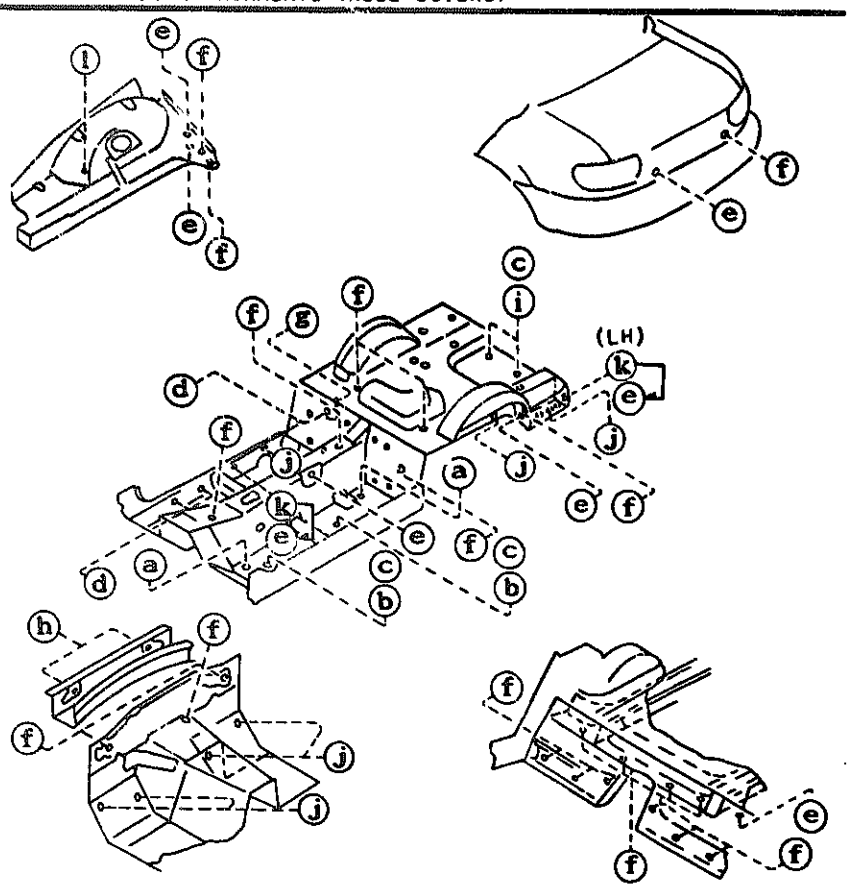

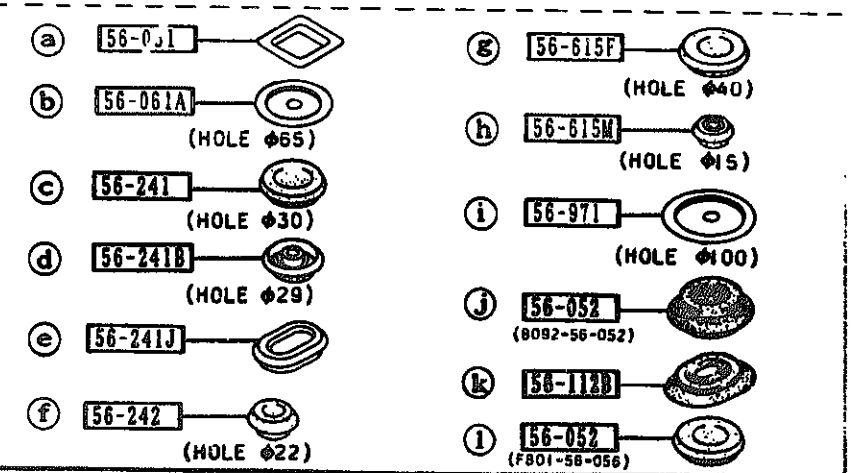

PART NO.	QTY	MODEL/RESTRICTION	MODEL/RESTRICTION	MODEL/RESTRICTION	FROM TO
56-051		COVER,HOLE			
1011-56-051	4				
56-052		PLUG,DRAIN			
8092-56-052	9	D=12MM			
F801-56-056	4				0701-
56-061A		COVER,HOLE			
8545-56-052	4				
56-112B		PLUG,DRAIN			
8092-56-053	3				-9516
56-241		PLUG,DRAIN			
0118-56-241	6				
56-241B		PLUG			
8001-56-051	6				
56-241J		PLUG,DRAIN			
8477-56-241	6				-9516
8477-56-241	9				9516-
56-242		PLUG,DRAIN			
0118-56-242B	18				
56-615F		PLUG,DRAIN			
0208-56-615	2				
56-615M		PLUG,DRAIN			
NA01-56-051	2				
56-971		COVER,HOLE			
8545-56-053	2				

9516 NA35##-103[illegible]
0701 NA35##-200041

5390 -1 FLOOR ATTACHMENTS

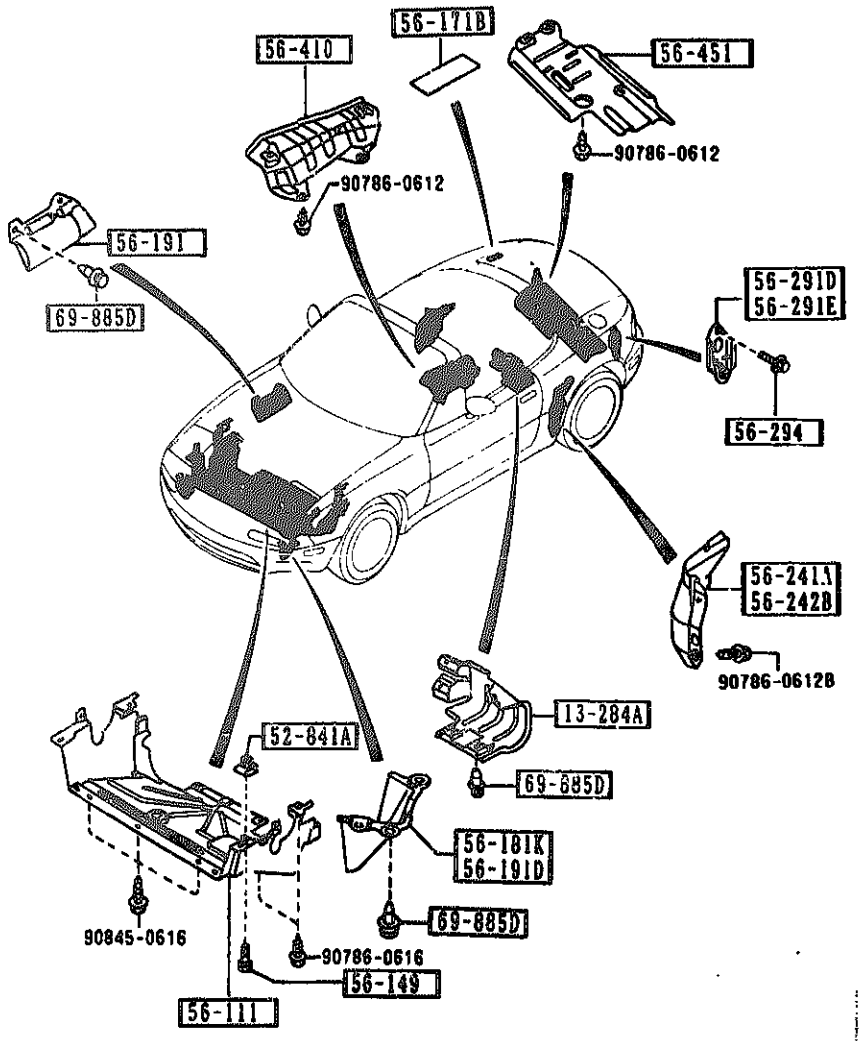

PART NO.	QTY	MODEL/RESTRICTION	MODEL/RESTRICTION	MODEL/RESTRICTION	FROM-TO
13-284A		COVER,FUEL FILTER			
NA01-56-241A A (NA01-56-241B)	1				-9B01
NA01-56-241B	1				9B01-
52-841A		NUT,CLIP			
B455-56-135	1				9601-
56-111		COVER,UNDER			
NA01-56-111 AN(NA01-56-111A)	1				-9601
NA01-56-111A AN(NA01-56-111B)	1				9601-9621
NA01-56-111B AN(NA01-56-111C)	1				9621-0701
NA01-56-111C	1				0701-
56-149		SCREW,TAPPING-MUD GUARD			
B455-56-149	3				9601-
56-171B		PROTECTOR(R),RR FENDER			
NA01-56-171A	1				
56-181K		COVER(R),SENSOR-AIR BAG			
NA01-56-181A	1				-9501
56-191		SHIELD,SPLASH			
NA01-56-112	1				
56-191D		COVER(L),SENSOR-AIR BAG			
NA01-56-191A	1				-9501
56-241A		SHIELD(R),SPLASH-REAR			
NA01-56-311	1				
56-242B		SHIELD(L),SPLASH-REAR			
NA01-56-321	1				
56-291D		HOOK(R),TIE DOWN			
NA01-56-29XC	1				

9501 NA35##-102613
9601 NA35##-106797
9621 NA35##-110426
9B01 NA35##-126490
0701 NA35##-200041

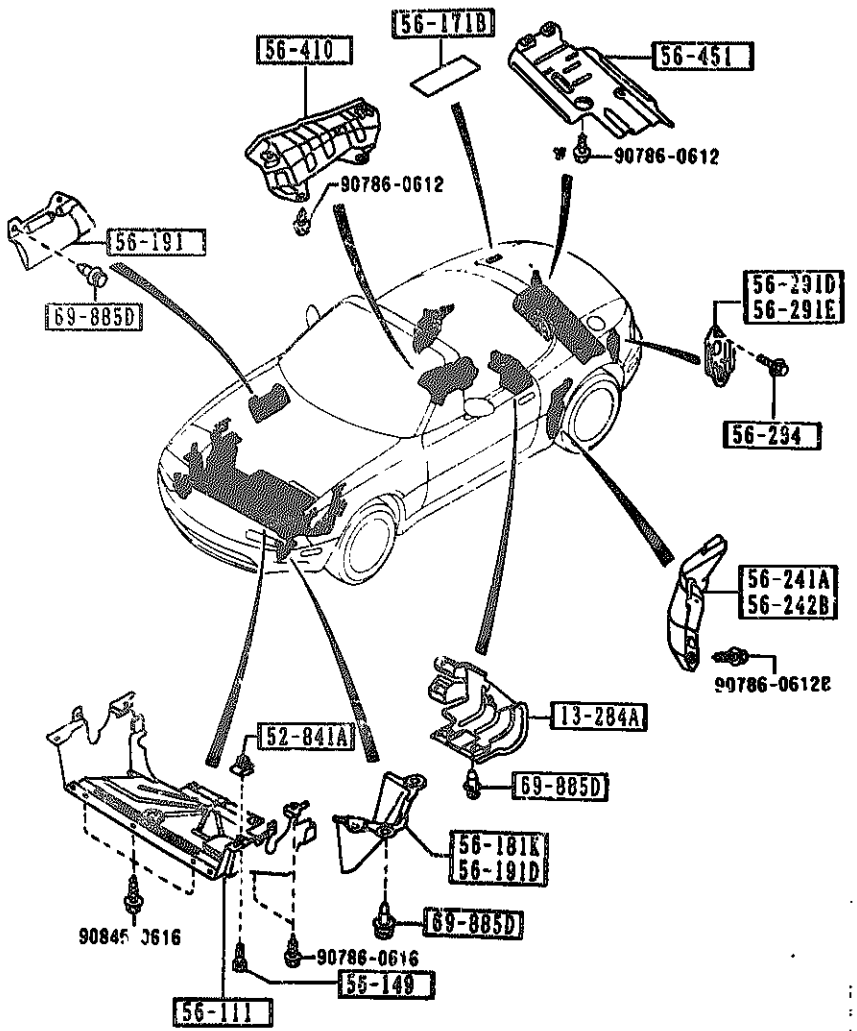

PART NO.	QTY	MODEL/RESTRICTION	MODEL/RESTRICTION	MODEL/RESTRICTION	FROM-TO
56-291E		HOOK(L),TIE DOWN			
NA01-56-290C	1				
56-294		SCREW,TIE DOWN HOOK			
NA01-56-294	4				
56-410		INSULATOR,HEAT-FRONT			
NA01-56-411	1				
56-451		INSULATOR			
NA01-56-451	1				
69-885D		FASTENER			
NA01-56-145	15				-9501
NA01-56-145	7				9501-

9501 NA35##-102613

SECTION NAME INDEX (BODY)

LO.NO	SEC.NO	SECTION NAME
2-C05	0900	KEY SETS
2-E05	5000	FRONT BUMPER
2-H05	5010	REAR BUMPER
2-J05	5030	WINDOW MOULDING & COWL GRILLES
2-L05	5100	HEAD LAMPS
2-M05	5103	HEAD LAMP RETRACTORS
2-D06	5105	FRONT COMBINATION LAMPS
2-F06	5110	REAR COMBINATION LAMPS
2-I06	5120	LICENSE LAMPS
2-J06	5180	REAR FINISHER
2-L06	5230	BONNET
2-N06	5260	TRUNK LID
2-D07	5310	BODY PANELS (FRONT)
2-E07	5320	BODY PANELS (FENDER & WHEEL APRON)
2-H07	5330	BODY PANELS (DASH & COWL PANEL)
2-I07	5340	BODY PANELS (SIDE)
2-C08	5370	BODY PANELS (FLOOR)
2-F08	5380	FLOOR ATTACHMENTS (HOLE COVERS)
2-G08	5390	FLOOR ATTACHMENTS
2-C09	5500	DASHBOARD EQUIPMENTS
2-E09	5520	METER HOOD
2-F09	5530	SPEEDOMETER CABLE
2-G09	5540	METER COMPONENTS
2-I09	5560	DASHBOARD & RELATED PARTS
2-L09	5570	CONSOLE
2-C10	5580	VENTILATOR
2-D10	5700	SEATS
2-K10	5790	SEAT BELTS
2-L10	5800	FRONT DOORS
2-C11	5830	FRONT DOOR MECHANISMS
2-F11	5840	FRONT DOOR TRIMS & RELATED PARTS
2-C12	6100	HEATER
2-D12	6110	HEATER UNIT COMPONENTS
2-E12	6115	HEATER CONTROLS COMPONENTS
2-F12	6120	HEATER BLOWER COMPONENTS
2-G12	6130	AIR CONDITIONER
2-K12	6135	O RING SET,PIPING
2-L12	6140	COMPRESSOR COMPONENTS (AIR CONDITIONER)
2-N12	6150	COOLING UNIT (AIR CONDITIONER)
2-C13	6300	WINDOW GLASSES
2-D13	6330	SUNROOF
2-M13	6600	SWITCHES & RELAYS (ENGINE)
2-D14	6610	DASHBOARD SWITCHES
2-E14	6611	COMBINATION SWITCH
2-F14	6630	RELAYS & UNIT (BODY)
2-G14	6635	DOOR SWITCH & HORNS
2-H14	6640	AUTO CRUISE CONTROL SYSTEM
2-I14	6680	AUDIO SYSTEMS (RADIO & TAPE DECK)
2-K14	6682	AUDIO SYSTEMS (ANTENNA & SPEAKER)
2-L14	6700	WIRING HARNESSES(FRONT & REAR)
2-N14	6701	WIRING HARNESSES(ENGINE & T/MISSION)
2-D15	6702	WIRING HARNESSES(DASHBOARD)
2-E15	6703	WIRING HARNESSES(DOOR,FLOOR/CEILING)
2-F15	6704	WIRING HARNESS CLAMPS
2-G15	6720	WINDSHIELD WASHER
2-K15	6730	WINDSHIELD WIPERS
2-M15	6740	WIPER MOTOR COMPONENTS(FRONT)
2-N15	6820	FRONT HEADER TRIM & PILLAR TRIMS
2-C16	6840	TRIMS & SCUFF PLATES
2-E16	6860	FLOOR MATS & PADS
2-G16	6870	SERVICE TOOLS
2-H16	6900	VISORS,ASSIST HANDLES & MIRRORS
2-J16	6930	CAUTION PLATES & LABELS
2-L16	7250	QUARTER WINDOW & TRIMS
3-C03	7900	ACCESSORIES

CATLOG-NO= AUNA01-07

DATE. 1992-02

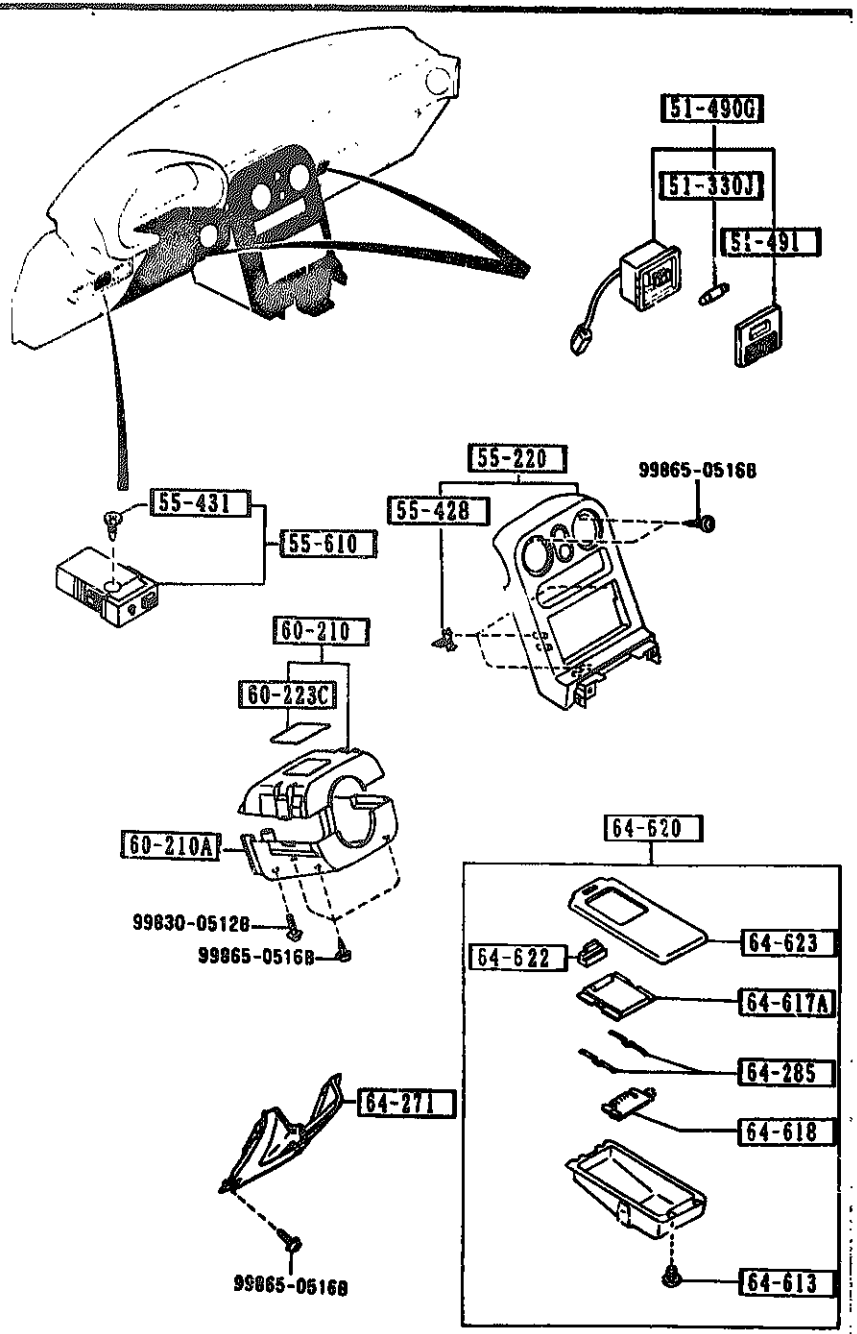

AUNA01

5500 -1 DASHBOARD EQUIPMENTS

PART NO.	QTY	MODEL/RESTRICTION	MODEL/RESTRICTION	MODEL/RESTRICTION	FROM-TO
51-330J		BULB			
99701-5050	2	12V 5W			
51-490G		LAMP,PERSONAL			
NA01-51-490 A (NA01-51-490B)	2				-9902
00		NA0 BLACK			
NA01-51-490B	2				9902-
00		NA0 BLACK			
51-491		LENS,PERSONAL LAMP			
H197-51-491A	2				
00		BLACK			
55-220		PANEL,CENTER			
NA01-55-210 A (NA01-55-210A)	1				-9801
00		NA0 BLACK			
NA01-55-210A	1				9801-
00		NA0 BLACK			
55-428		SPRING,METER HOOD			
GJ21-55-428	3				
55-431		BULB,RESISTER			
BR70-55-431	1				
55-610		RESISTOR,PANEL LIGHT			
BR70-55-490	1				
60-210		COVER,COLUMN-UPPER			
NA01-60-220	1				
00		NA0 BLACK			
60-210A		COVER,COLUMN-LOWER			
NA01-60-230A	1				
00		NA0 BLACK			
60-223C		CAP,COLUMN COVER			

9801 NA35##-116316
9902 NA35##-119435

CAT. AUNA01-07

1992-02

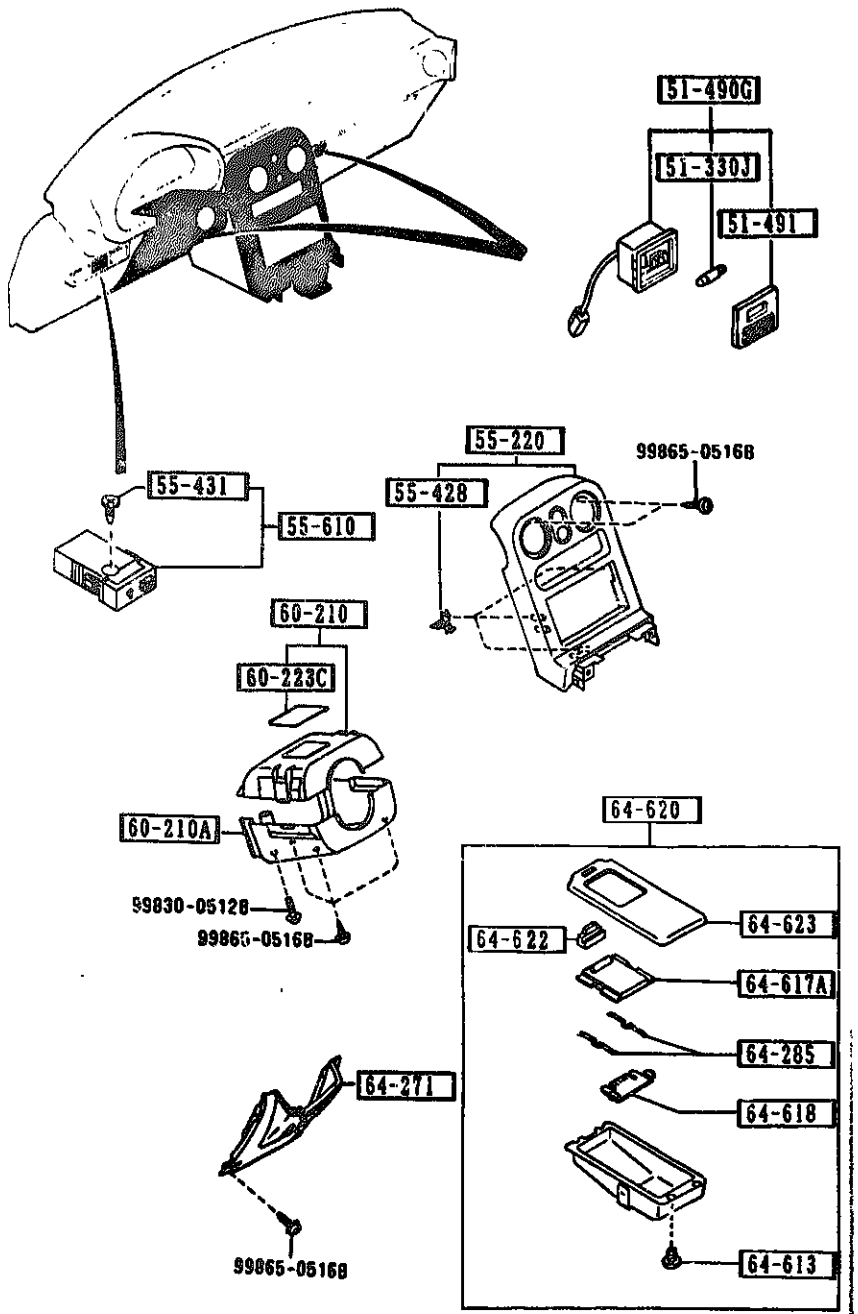

PART NO.	QTY	MODEL/RESTRICTION	MODEL/RESTRICTION	MODEL/RESTRICTION	FROM-TO
CONT'D					
NA01-60-223	1				
00		NA0 NA1 BLACK			
64-271		PANEL,CENTER-LOWER			
NA01-64-270B	1				-9401
00		NA0 BLACK			
NA01-64-270C	1				9401-
00		NA0 BLACK			
64-285		SPRING,ASH TRAY			
NA01-64-612	2				
64-613		SCREW,ASH TRAY			
NA01-64-613	4				
64-617A		LID,ASH TRAY			
NA01-64-617	1				
00		NA0 NA1 BLACK			
64-618		PLATE,ASH TRAY			
NA01-64-618	1				
64-620		TRAY,ASH			
NA01-64-610	1				
00		NA0 BLACK			
NA01-64-610A	1				0A01-
64-622		LIGHT,PLATE-ASH TRAY			
NA01-64-622	1				
64-623		CASE'OUT',ASH TRAY			
NA01-64-623	1				
00		NA0 BLACK			

9401 NA35##-100098
0A01 NA35##-213219
0C01 NA35##-220813

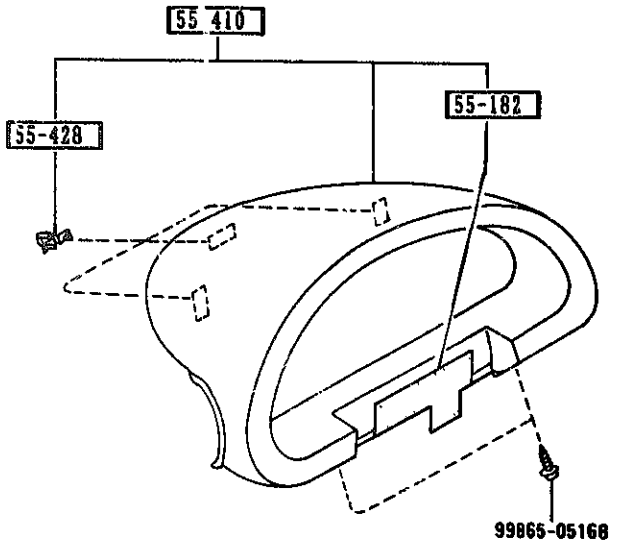

PART NO.	QTY	MODEL/RESTRICTION	MODEL/RESTRICTION	MODEL/RESTRICTION	FROM-TO
55-182		RUBBER,BLIND			
NA01-55-182	1				9609-
55-410		HOOD,METER			
NA01-55-420A	1				-9609
00		NA0 NA1 BLACK			
NA01-55-420B	1	(STD COAT BLACK/BLACK)			9609-
00		NA0 NA1 BLACK			
55-428		SPRING,METER HOOD			
GJ21-55-428	3				

9609 NA35**-108360

5530 --1 ※ SPEEDOMETER CABLE

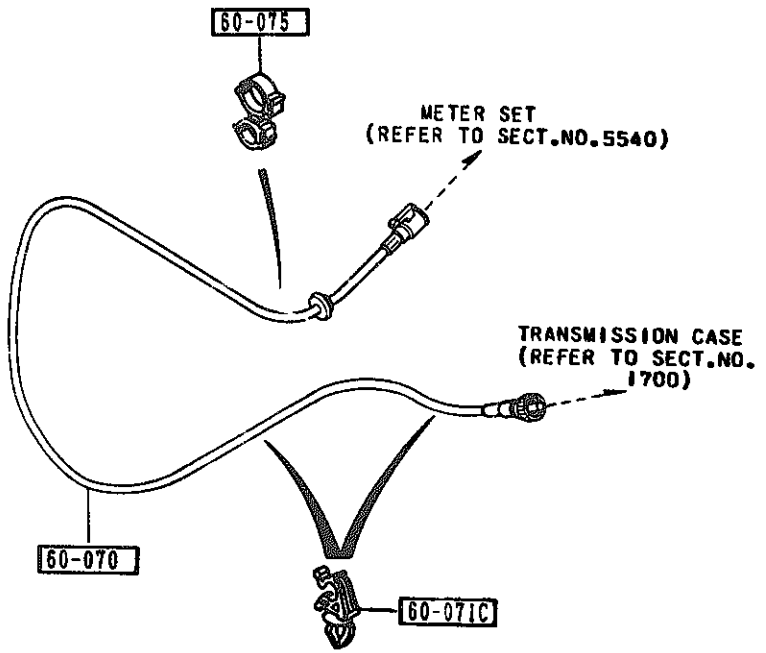

PART NO.	QTY	MODEL/RESTRICTION	MODEL/RESTRICTION	MODEL/RESTRICTION	FROM-TO
60-070		CABLE,SPEEDOMETER			
NA03-60-070	1	(AT)			
NA01-60-070A	1				-9613
G (NA01-60-070B)					
NA01-60-070B	1	(MT)			9613-
60-071C		CLIP			
U040-60-071	2				-0201
NA03-60-071	2				0201-
60-075		CLIP'A',SPEEDOMETER CABLE			
NA01-60-075	1				

9613 NA35##-109017
0201 NA35##-137180

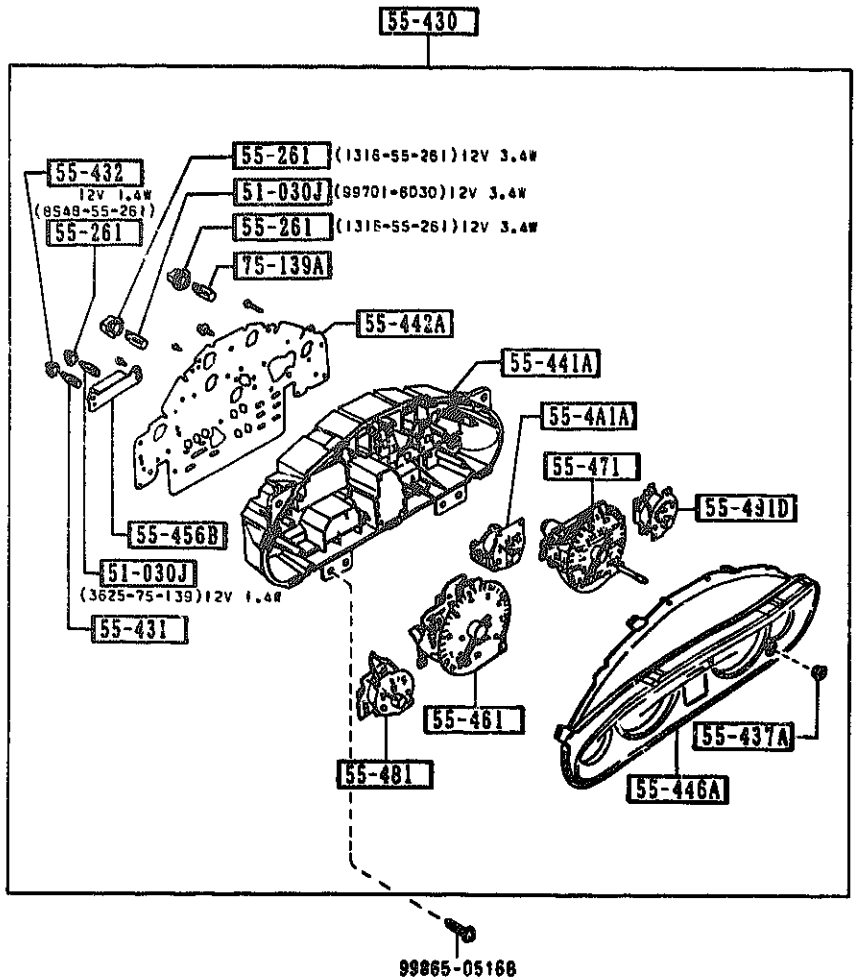

PART NO.	QTY	MODEL/RESTRICTION	MODEL/RESTRICTION	MODEL/RESTRICTION	FROM-TO
51-030J		BULB			
3625-75-139	5	12V 1.4W,FOR WARNING (MT)			
	6	(AT)			
99701-6030	3	12V 3.4W			
55-261		SOCKET			
1316-55-261	7	12V 3.4W			
8548-55-261	5	12V 1.4W BLACK (MT)			
	6	(AT)			
55-4A1A		METER,OIL PRESSURE			
NA01-55-4A1	1				
55-430		METER SET			
NA01-55-430A AN(NA01-55-430B)	1				-9820
NA03-55-430A A (NA03-55-430B)	1				-0701
NA01-55-430B A (NA01-55-430C)	1				9820-0701
NA01-55-430C	1	(MT)			0701-
NA03-55-430B	1	(AT)			0701-
55-431		BULB,RESISTER			
NA01-55-431	1				
55-432		SOCKET,METER SET			
NA01-55-432	1				
55-437A		GROMMET,KNOB-METER SET			
NA01-55-437	1				
55-441A		CASE,METER			
NA01-55-441	1				-9820
NA01-55-441A	1				9820-0701
NA01-55-441B	1				0701-

9820 NA35**-128848
0701 NA35**-200041

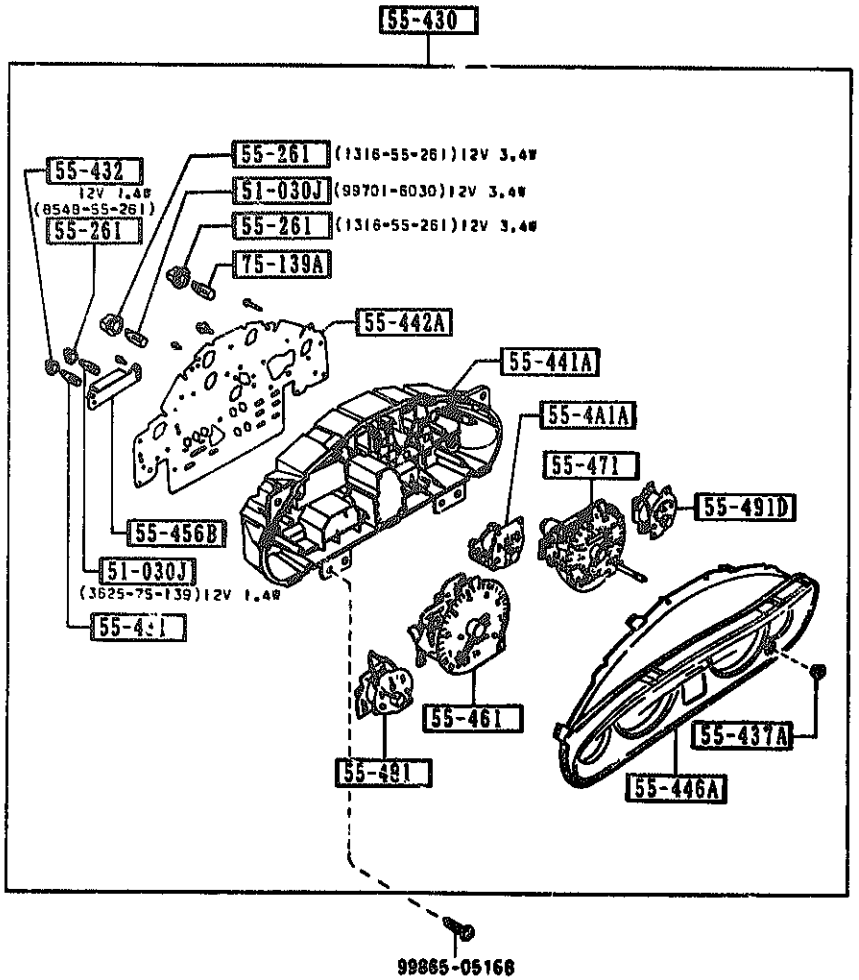

PART NO.	QTY	MODEL/RESTRICTION	MODEL/RESTRICTION	MODEL/RESTRICTION	FROM-TO
55-442A		PLATE,PRINT			
NA01-55-442	1	(MT)			-9B20
NA03-55-442A G (NA03-55-442B)	1				-0701
NA01-55-442A G (NA01-55-442B)	1				9B20-0701
NA01-55-442B	1	(MT)			0701-
NA03-55-442B	1	(AT)			0701-
55-446A		PLATE,WINDOW			
NA01-55-446	1				-0701
NA01-55-446A	1				0701-
55-456B		RESISTOR,METER			
NA01-55-476	1	(MT)			-9B20
55-461		TACHOMETER			
NA01-55-461 G (NA01-55-461A)	1				-0701
NA03-55-461 G (NA03-55-461A)	1				-0701
NA01-55-461A	1	(MT)			070.-
NA03-55-461A	1	(AT)			0701-
55-471		SPEEDMETER			
NA01-55-471 A (NA01-55-471A)	1				-0701
NA01-55-471A	1				0701-
55-481		METER,FUEL			
NA01-55-481	1				
55-491D		METER,THERMO			
NA01-55-491	1				
75-139A		BULB			
8491-55-431	4				

9B20 NA3SMM-128848
0701 NA3SMM-200041

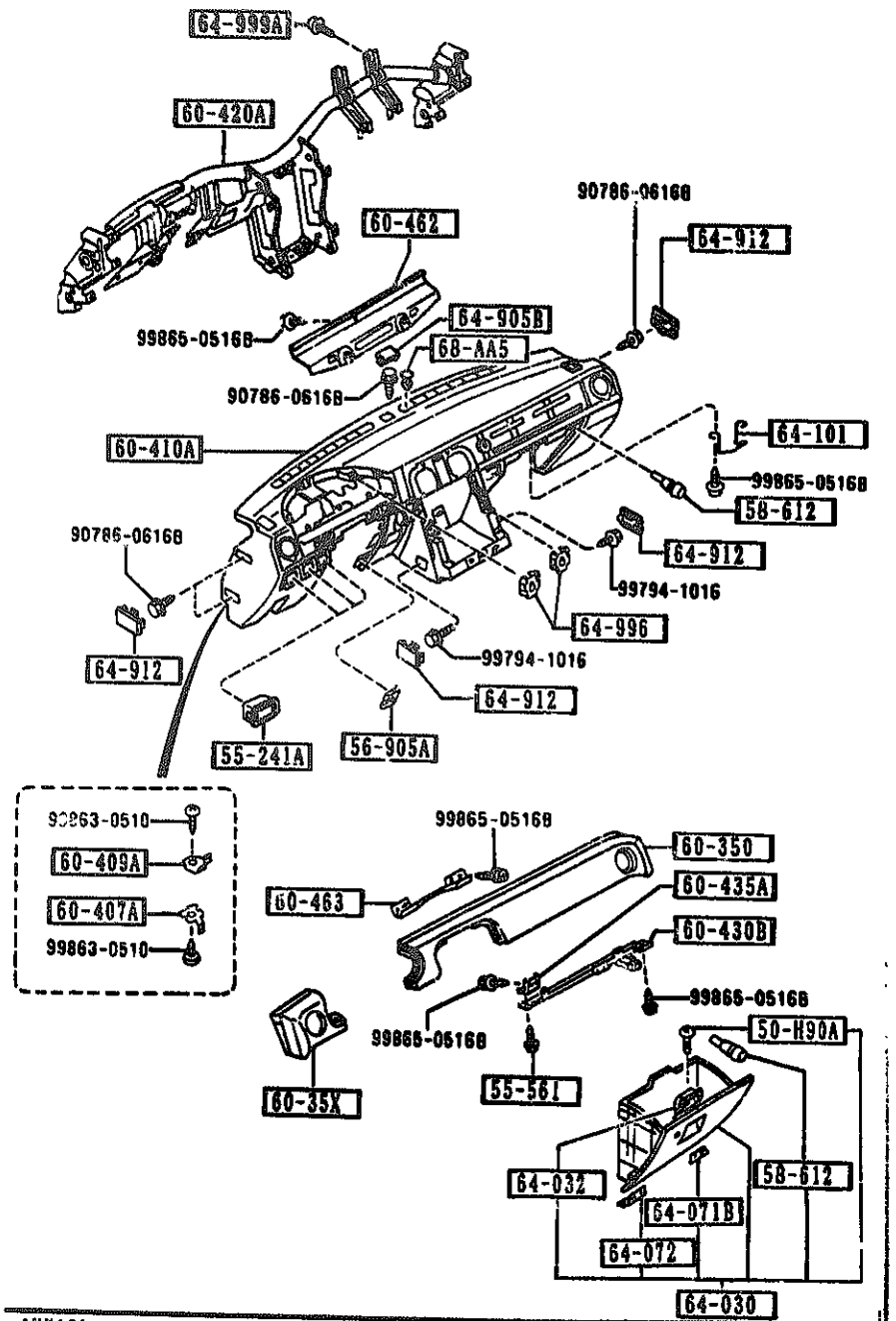

PART NO.	QTY	MODEL/RESTRICTION	MODEL/RESTRICTION	MODEL/RESTRICTION	FROM-TO
50-H90A		SCREW,MOULD-FRT WIND			
LA01-50-H90	1				9801-
55-241A		BOX,INSTRUMENT PANEL			
NA01-55-241A	3				
00		NA0 NA1 BLACK			
55-561		BOLT,INST. PANEL			
B455-55-561	1				
56-905A		NUT,SPRING			
B092-60-408	4				
58-612		CUSHION,RUBBER			
B092-64-046	3				
60-35X		PAD,INSTRUMENT PANEL			
NA01-60-35X	1				
00		NA0 BLACK			
60-350		PAD,CRUSH			
NA01-60-350	1				
00		NA0 BLACK			
60-407A		SPRING,NO.1			
NA01-60-407	2				
60-409A		SPRING,NO.2			
NA01-60-409	2				
60-410A		PANEL,INSTRUMENT			
NA01-60-401B	1				-9807
A (NA01-60-401C)					
00		NA0 BLACK			
NA01-60-401C	1	(STD COAT BLACK/BLAC K)			9807-
00		NA0 BLACK			
60-420A		FRAME,INST.PANEL			
NA01-60-420D	1				

9801 NA35##-116316
9807 NA35##-127226

5560 -2 DASHBOARD & RELATED PARTS

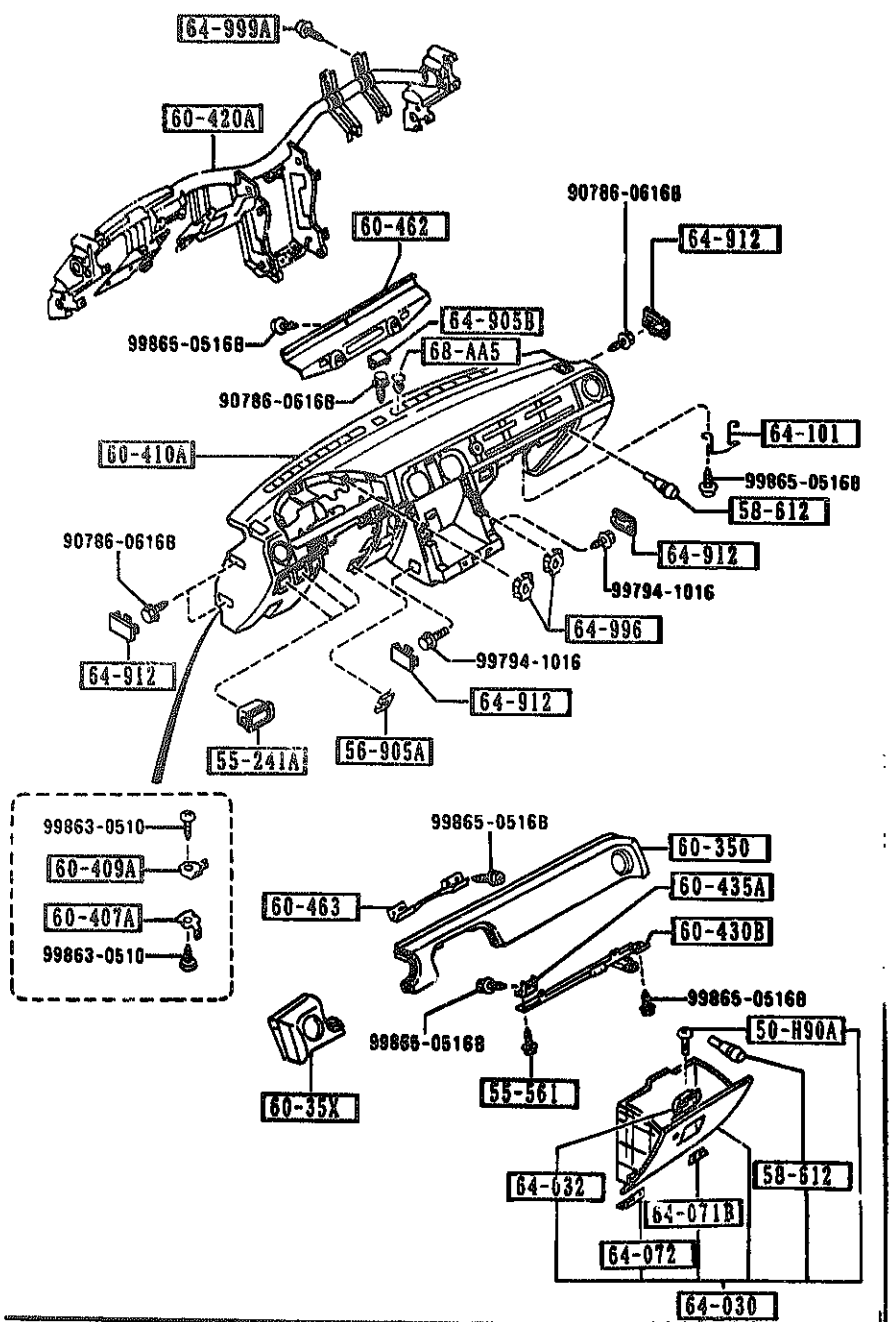

PART NO.	QTY	MODEL/RESTRICTION	MODEL/RESTRICTION	MODEL/RESTRICTION	FROM-TO
60-430B		MEMBER(R),INST. PANEL			
NA01-60-430A A (NA01-60-430B)	1				-9701
NA01-60-430B A (NA01-60-430C)	1				9701-0202
NA01-60-430C	1				0202-
60-435A		BRACKET,MEMBER			
NA01-60-435	1				
60-462		BRACKET,INST. PANEL			
NA01-60-462 A (NA01-60-462A)	1				-9801
NA01-60-462A	1				9801-
60-463		BRACKET,CRUSH PAD			
NA01-60-463	1				
64-030		BOX,GLOVE			
NA01-64-030C A (NA01-64-030D)	1				-9801
00		NAO BLACK			
NA01-64-030D	1				9801-
00		NAO BLACK			
64-032		COVER,BOX			
NA01-64-032A A (NA01-64-032B)	1				-9801
00		NAO BLACK			
NA01-64-032B	1				9801-
00		NAO BLACK			
64-071B		HINGE(R),GLOVE LID			
NA01-64-03X	1				
64-072		HINGE(L),GLOVE LID			
NA01-64-03Y	1				
64-101		STRIKER			
NA01-64-101	1				

9701 NA35##-111969
9801 NA35##-116316
0202 NA35##-137399

5560 ~3 # DASHBOARD & RELATED PARTS

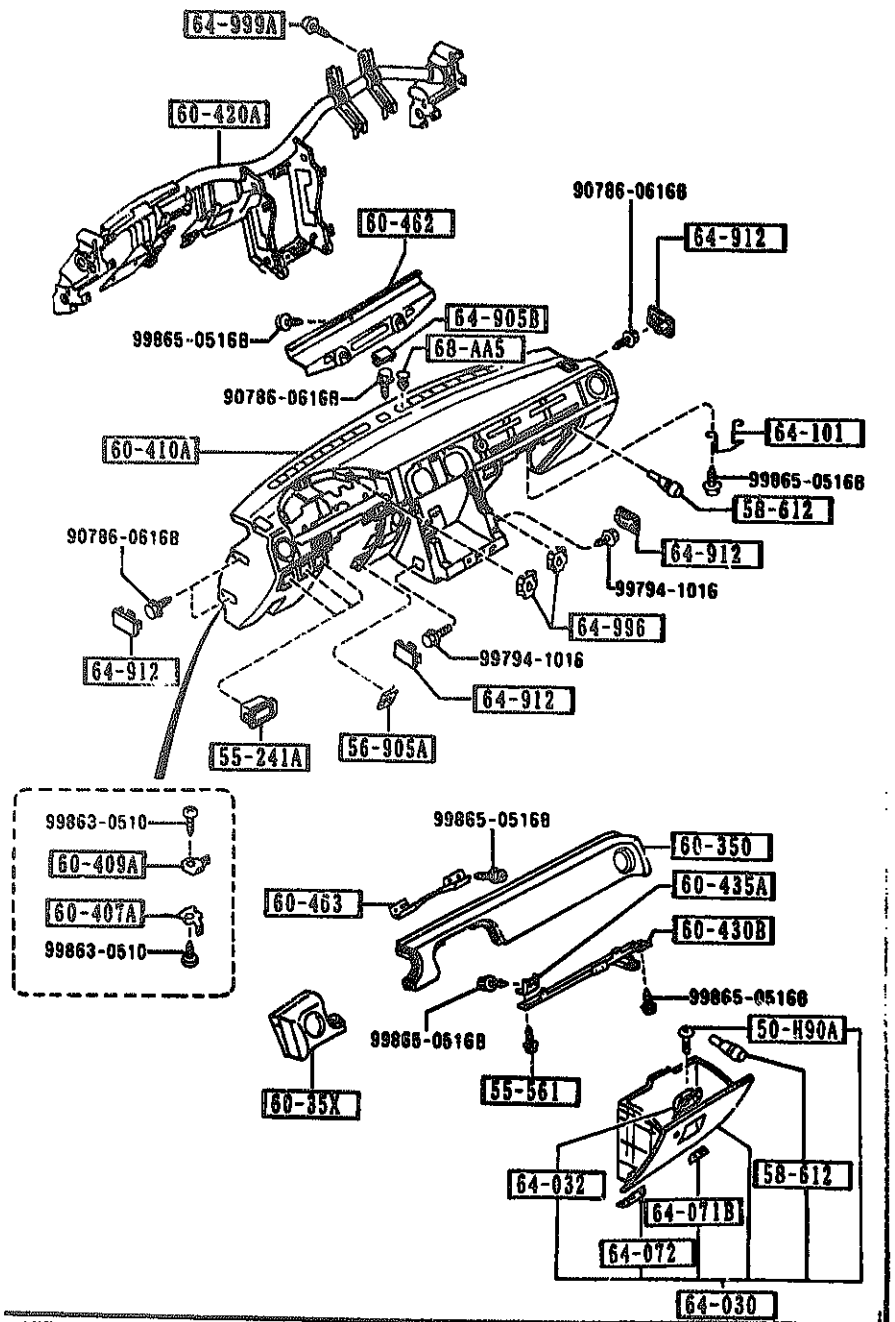

PART NO.	QTY	MODEL/RESTRICTION	MODEL/RESTRICTION	MODEL/RESTRICTION	FROM-TO
64-905B		COVER,HOLE-(C)			
NA01-64-905	1	(STD COAT BLACK/BLACK)			
0D		NA0 BLACK			
64-912		COVER,SIDE			
NA01-64-912	6				
0D		NA0 BLACK			
64-996		NUT,EXPANSION			
GJ21-64-996	8				
64-999A		SCREW,TAPPING			
W201-64-999	37				
68-AA5		FASTENER,DOOR TRIM			
W201-68-AA5	4				
0D		NA0 BLACK			

5570 -1 CONSOLE

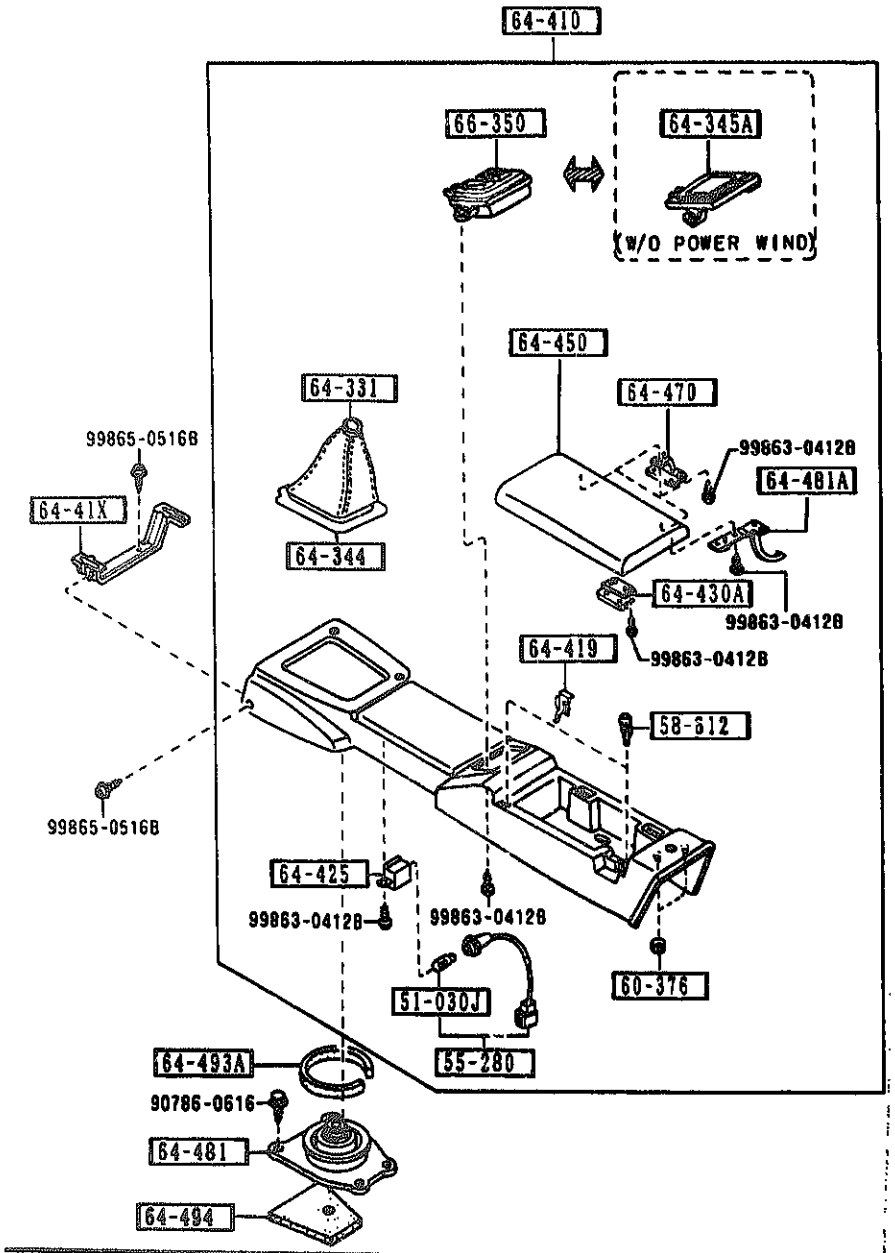

PART NO.	QTY	MODEL/RESTRICTION	MODEL/RESTRICTION	MODEL/RESTRICTION	FROM-TO
51-030J		BULB			
3625-75-139	1	12V 1.4W,FOR WARNING			
55-280		BULB & SOCKET			
NA01-55-280	1	(MT)			
NA01-55-280	1	(AT)			-0125
NA06-55-280	1	(AT)			0125-
58-612		CUSHION,RUBBER			
B092-64-046	2				
60-376		NUT,TOP-CRUSH PAD			
B092-60-376	2				
64-331		BOOT,CHANGE			
NA01-64-331	1	(MT)			
00		NA0 BLACK			
64-344		PLATE,BACK-BOOTS RIN G			
NA01-64-344B	1	(MT)			
64-345A		BOX,COIN-CONSOLE			
NA01-64-437	1	BASE, (W/O POWER WIND)			
00		NA0 BLACK			
64-41X		BRACKET,REAR CONSOLE			
NA01-64-416	1				
64-410		CONSOLE,REAR			
NA01-64-410B	1	BASE, (URETHANE KNOB,W/O P OWER WIND.) (MT)			
00		NA0 BLACK			
NA02-64-410B	1	PKG-DPT, (URETHANE KNOB,W/POW ER WIND.) (MT)			
0C		NA0 BLACK			
NA03-64-410A	1	BASE, (URETHANE KNOB,W/O P			

0125 NA35##-136059

AUNA01

CAT. AUNA01-07

1992-02

5570 CONSOLE

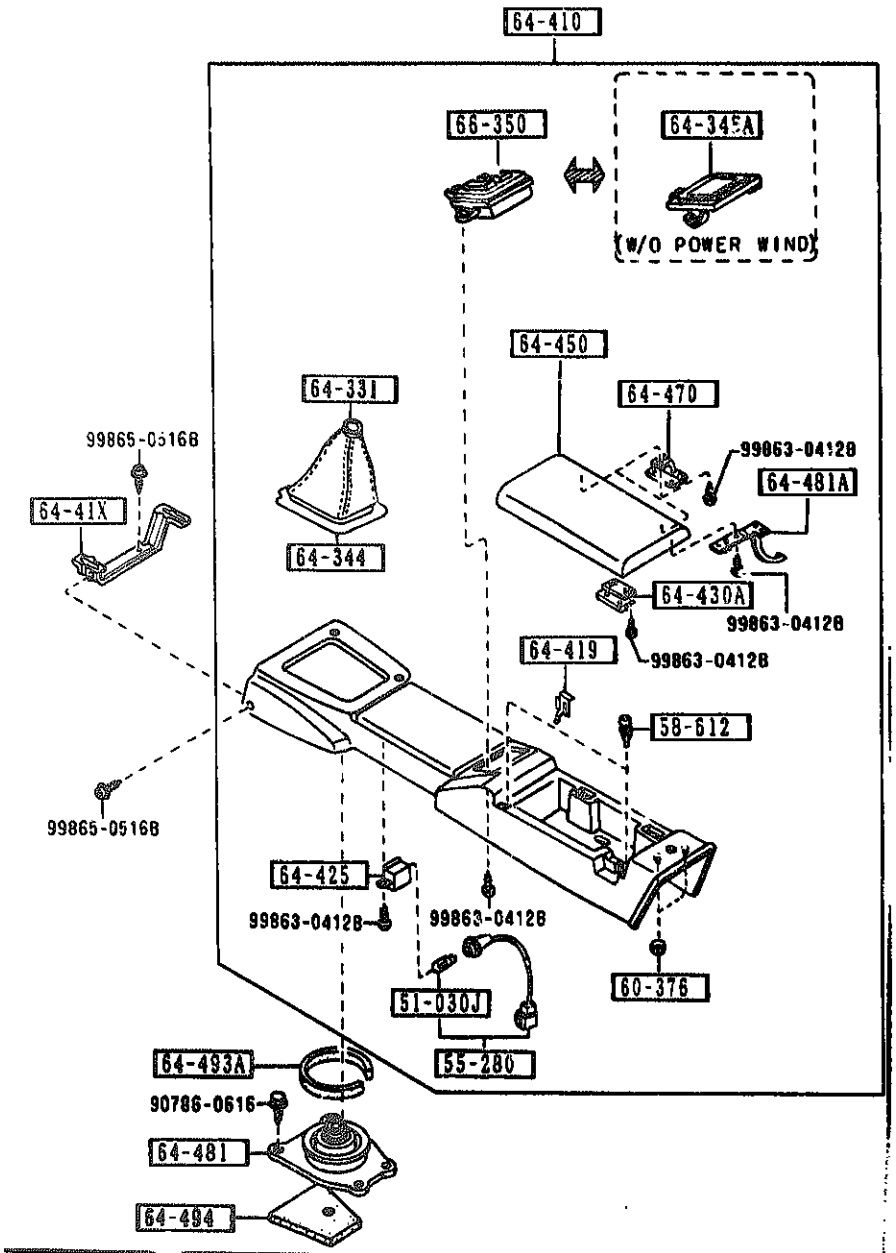

PART NO.	QTY	MODEL/RESTRICTION	MODEL/RESTRICTION	MODEL/RESTRICTION	FROM-TO
CONT'D					
		OWER WIND.) (AT)			
00		NA0 BLACK			
NA06-64-410B	1	PKG-OPT, (URETHANE KNOB,W/POWER WIND.) (AT)			
00		NA0 BLACK			
64-419		CLIP,HARNESS-HAND BRAKE			
H260-64-419	1				
64-425		CASE,LAMP			
NA01-64-414	1				
64-430A		LOCK,CONSOLE-REAR			
FB01-64-430	1				
64-450		LID,CONSOLE			
NA01-64-450A	1				
00		NA0 BLACK			
64-470		HINGE			
NA01-64-45XA	2				
00		NA0 BLACK			
64-481		INSULATOR NO.1,CHANGE			
NA01-64-481 A (NA01-64-481A)	1				-9616
NA01-64-481A	1	(MT)			9616-
64-481A		STOPPER,CONSOLE LID			
NA01-64-452	1				
00		NA0 NA0 NA1 BLACK			
64-493A		PACK,SILENT			
H001-64-493	1	(MT)			
64-494		PAD,CHANGE BOOT			
FB01-64-495	1	(MT)			

9616 NA35MM-109700

AUNA01

CAT. AUNA01-07

1992-02

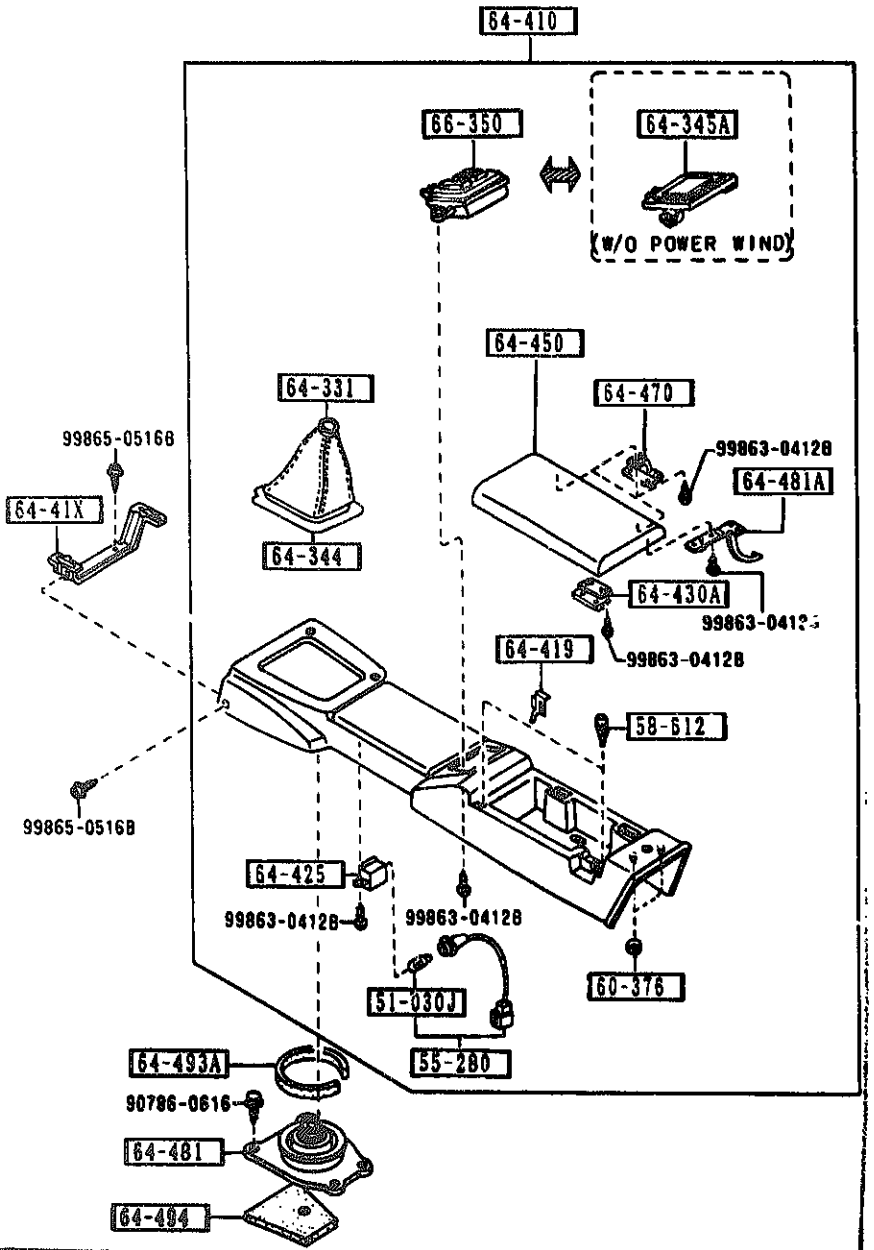

PART NO.	QTY	MODEL/RESTRICTION	MODEL/RESTRICTION	MODEL/RESTRICTION	FROM-TO
66-350		SWITCH,POWER WINDOW			
NA01-66-350A	1	PKG-OPT, V-SPECIAL, (W/POWER WIND) (MT)			
00		NA0 BLACK			
NA03-66-350	1	PKG-OPT, V-SPECIAL, (W/POWER WIND) (AT)			
00		NA0 BLACK			

SECTION NAME INDEX (BODY)

LO.NO	SEC.NO	SECTION NAME
2-C05	0900	KEY SETS
2-E05	5000	FRONT BUMPER
2-H05	5010	REAR BUMPER
2-J05	5030	WINDOW MOULDING & COWL GRILLES
2-L05	5100	HEAD LAMPS
2-M05	5103	HEAD LAMP RETRACTORS
2-D06	5105	FRONT COMBINATION LAMPS
2-F06	5110	REAR COMBINATION LAMPS
2-I06	5120	LICENSE LAMPS
2-J06	5180	REAR FINISHER
2-L06	5230	BONNET
2-N06	5260	TRUNK LID
2-D07	5310	BODY PANELS (FRONT)
2-E07	5320	BODY PANELS (FENDER & WHEEL APRON)
2-H07	5330	BODY PANELS (DASH & COWL PANEL)
2-I07	5340	BODY PANELS (SIDE)
2-C08	5370	BODY PANELS (FLOOR)
2-F08	5380	FLOOR ATTACHMENTS (HOLE COVERS)
2-G08	5390	FLOOR ATTACHMENTS
2-C09	5500	DASHBOARD EQUIPMENTS
2-E09	5520	METER HOOD
2-F09	5530	SPEEDOMETER CABLE
2-G09	5540	METER COMPONENTS
2-I09	5560	DASHBOARD & RELATED PARTS
2-L09	5570	CONSOLE
2-C10	5580	VENTILATOR
2-D10	5700	SEATS
2-K10	5790	SEAT BELTS
2-L10	5800	FRONT DOORS
2-C11	5830	FRONT DOOR MECHANISMS
2-F11	5840	FRONT DOOR TRIMS & RELATED PARTS
2-C12	6100	HEATER
2-D12	6110	HEATER UNIT COMPONENTS
2-E12	6115	HEATER CONTROLS COMPONENTS
2-F12	6120	HEATER BLOWER COMPONENTS
2-G12	6130	AIR CONDITIONER
2-K12	6135	O RING SET,PIPING
2-L12	6140	COMPRESSOR COMPONENTS (AIR CONDITIONER)
2-N12	6150	COOLING UNIT (AIR CONDITIONER)
2-C13	6300	WINDOW GLASSES
2-D13	6330	SUNROOF
2-M13	6600	SWITCHES & RELAYS (ENGINE)
2-D14	6610	DASHBOARD SWITCHES
2-E14	6611	COMBINATION SWITCH
2-F14	6630	RELAYS & UNIT (BODY)
2-G14	6635	DOOR SWITCH & HORNS
2-H14	6640	AUTO CRUISE CONTROL SYSTEM
2-I14	6680	AUDIO SYSTEMS (RADIO & TAPE DECK)
2-K14	6682	AUDIO SYSTEMS (ANTENNA & SPEAKER)
2-L14	6700	WIRING HARNESSES(FRONT & REAR)
2-N14	6701	WIRING HARNESSES(ENGINE & T/MISSION)
2-D15	6702	WIRING HARNESSES(DASHBOARD)
2-E15	6703	WIRING HARNESSES(DOOR,FLOOR/CEILING)
2-F15	6704	WIRING HARNESS CLAMPS
2-I15	6720	WINDSHIELD WASHER
2-K15	6730	WINDSHIELD WIPERS
2-M15	6740	WIPER MOTOR COMPONENTS(FRONT)
2-N15	6820	FRONT HEADER TRIM & PILLAR TRIMS
2-[illegible]	[illegible]840	TRIMS & SCUFF PLATES
2-E16	6860	FLOOR MATS & PADS
2-G16	6870	SERVICE TOOLS
2-H16	6900	VISORS,ASSIST HANDLES & MIRRORS
2-J16	6930	CAUTION PLATES & LABELS
2-L16	7250	QUARTER WINDOW & TRIMS
3-C03	7900	ACCESSORIES

CATLOG-NO= AUNA01-07

DATE. 1992-02

5580 -1 M VENTILATOR

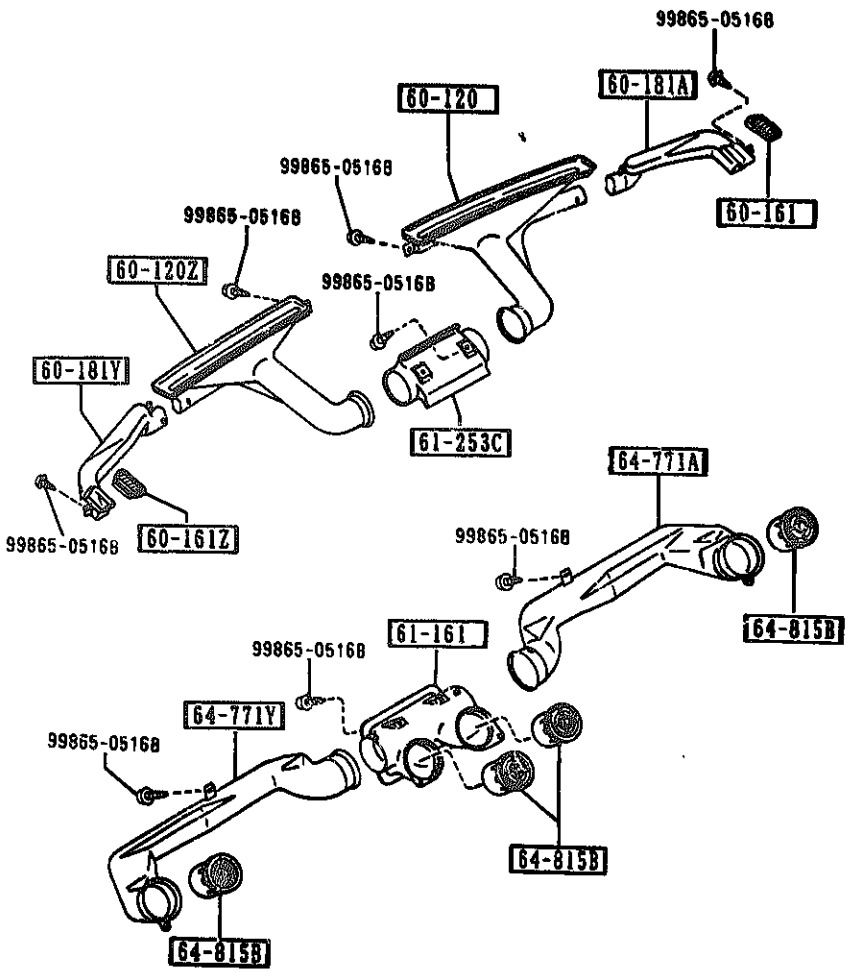

PART NO.	QTY	MODEL/RESTRICTION	MODEL/RESTRICTION	MODEL/RESTRICTION	FROM-TO
60-120		NOZZLE(R),DEFROSTER			
NA01-60-121	1				
60-120Z		NOZZLE(L),DEFROSTER			
NA01-60-141	1				
60-161		GRILLE(R),DEMISTER			
NA01-60-161	1	(STD COAT BLACK/BLACK)			
00		NA0 BLACK			
60-161Z		GRILLE(L),DEMISTER			
NA01-60-171	1	(STD COAT BLACK/BLACK)			
00		NA0 BLACK			
60-181A		DUCT(R),SIDE DEMIST.			
NA01-60-183	1				
60-181Y		DUCT(L),SIDE DEMIST.			
NA01-60-193	1				
61-161		DUCT,CENTER			
NA01-61-161	1				
61-253C		HOSE(C),DEFROSTER			
NA01-61-253	1				
64-771A		DUCT NO.1(R)			
NA01-64-741	1				
64-771Y		DUCT NO.1(L)			
NA01-64-841	1				
64-815B		LOUVER,VENTILATOR			
NA01-64-81X	4				
00		NA0 BLACK			

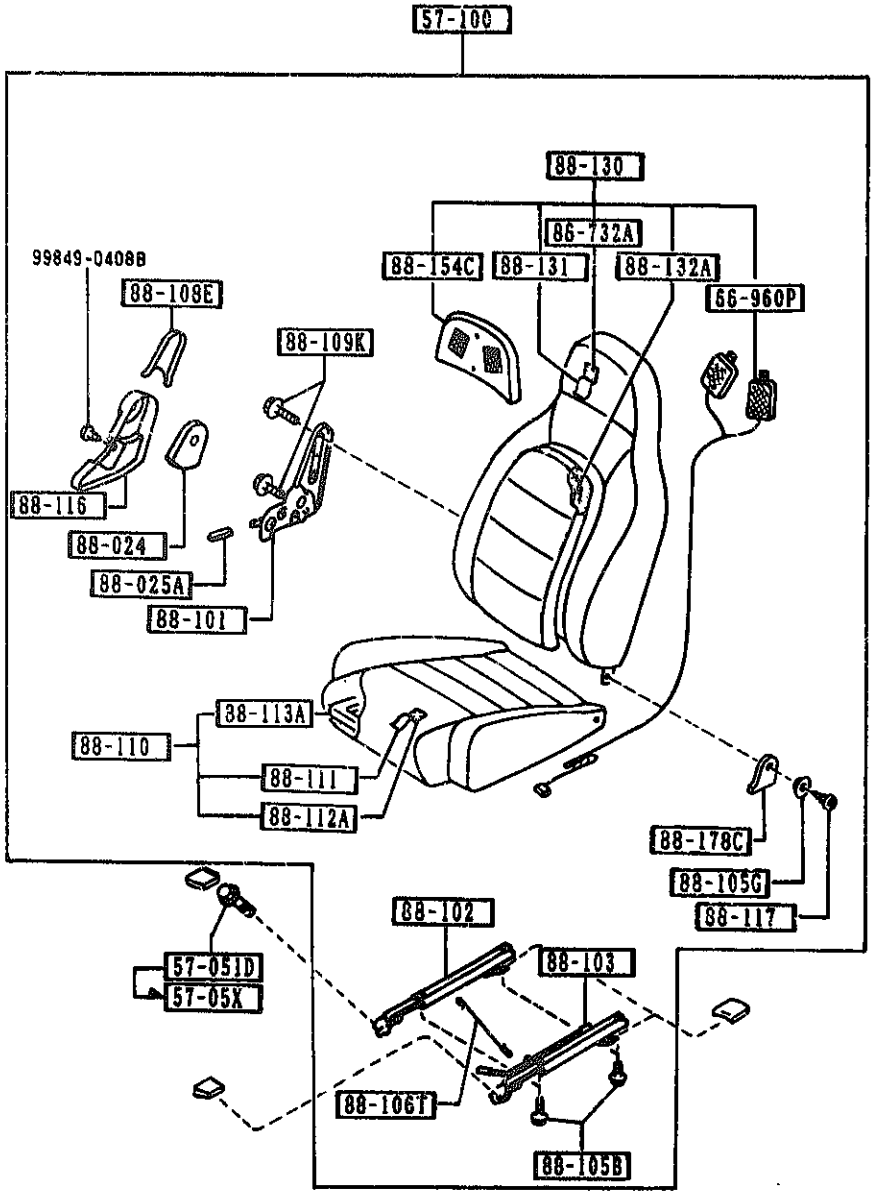

AUHA01 (CONT'D)

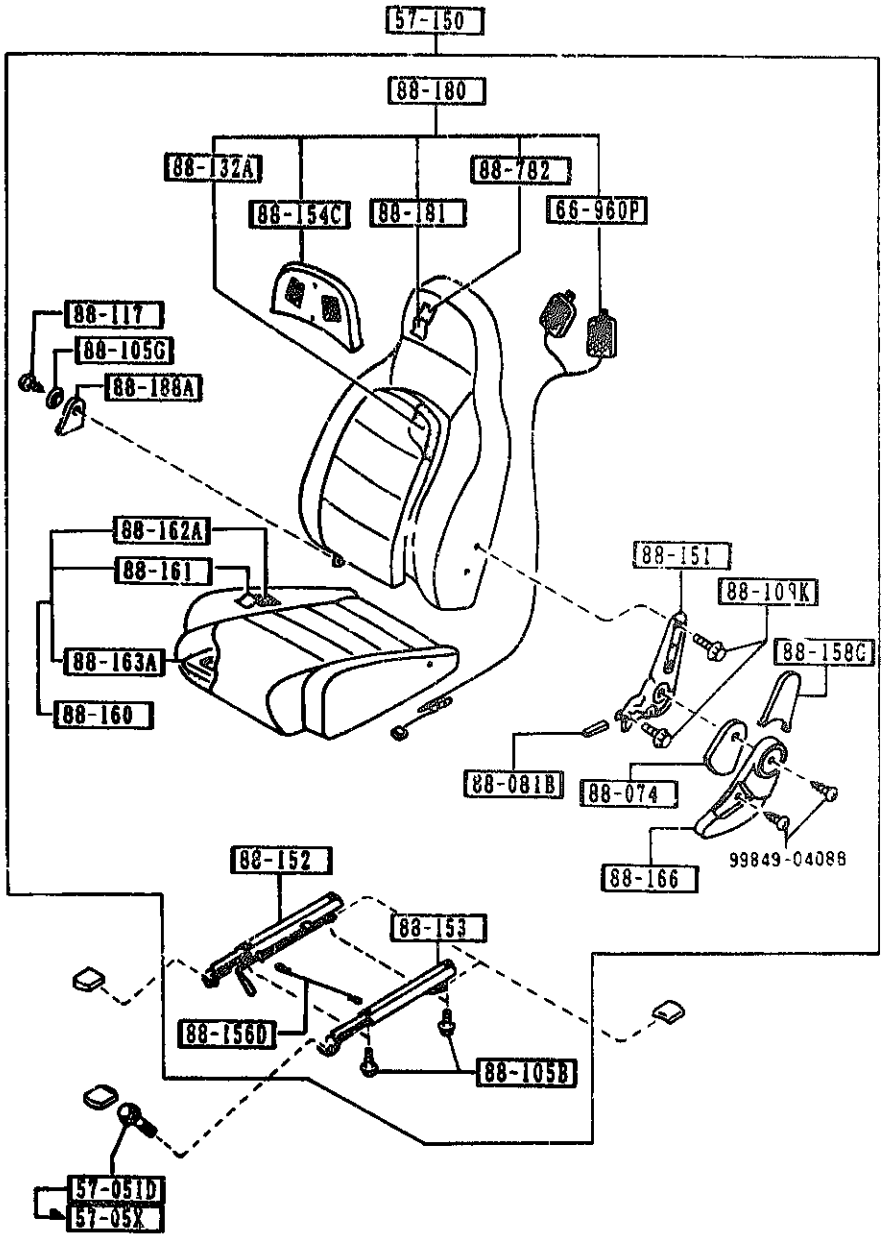

AUHA01

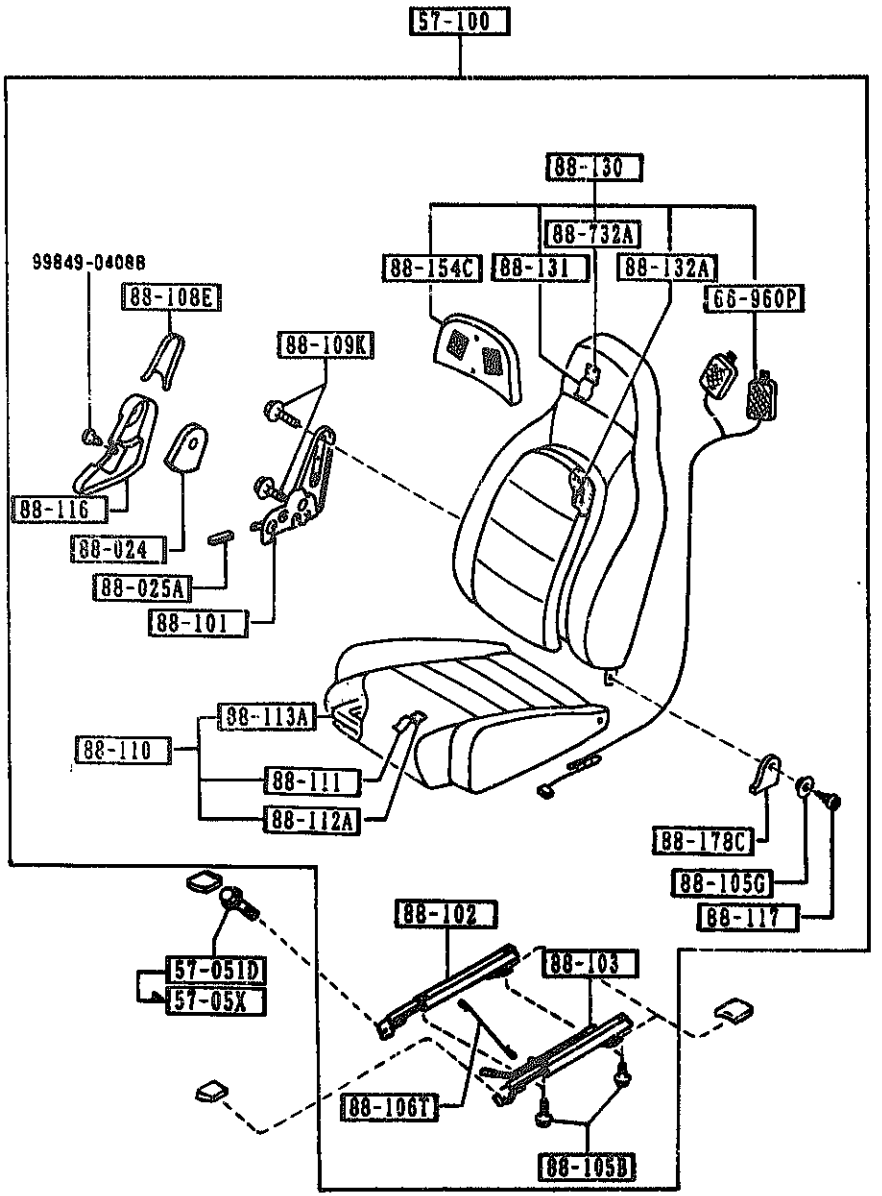

PART NO.	QTY	MODEL/RESTRICTION	MODEL/RESTRICTION	MODEL/RESTRICTION	FROM-TO
57-05X		BOLT,LINK			
8455-57-05X	8				9401-
57-051D		BOLT,SET			
UB40-57-05X	8				-9401
57-100		SEAT(R),FRONT			
NA01-57-100B A (NA01-57-100D)	1				-9701
00		NA0 BLACK			
NA02-57-100B A (NA02-57-100D)	1				-9701
00		NA0 BLACK			
NA01-57-100D A (NA01-57-100E)	1				9701-0201
00		NA0 BLACK			
NA02-57-100D A (NA02-57-100E)	1				9701-0201
00		NA0 BLACK			
NA01-57-100E A (NA01-57-100F)	1				0201-0601
00		NA0 BLACK			
NA02-57-100E A (NA02-57-100F)	1				0201-0601
00		NA0 BLACK			
NA01-57-100F	1	BASE, (CLOTH,W/O HEAD SPK.)			0601-
00		NA0 BLACK			
NA02-57-100F	1	PKG-OPT, (CLOTH,W/HEAD SPK.)			0601-
00		NA0 BLACK			
57-150		SEAT(L),FRONT			
NA01-57-150B A (NA01-57-150D)	1				-9701
00		NA0 BLACK			
NA02-57-150B A (NA02-57-150D)	1				-9701
00		NA0 BLACK			
NA01-57-150D A (NA01-57-150E)	1				9701-0201

9401 NA35##-100090
9701 NA35##-111969
0201 NA35##-137180
0601 NA35##-154752

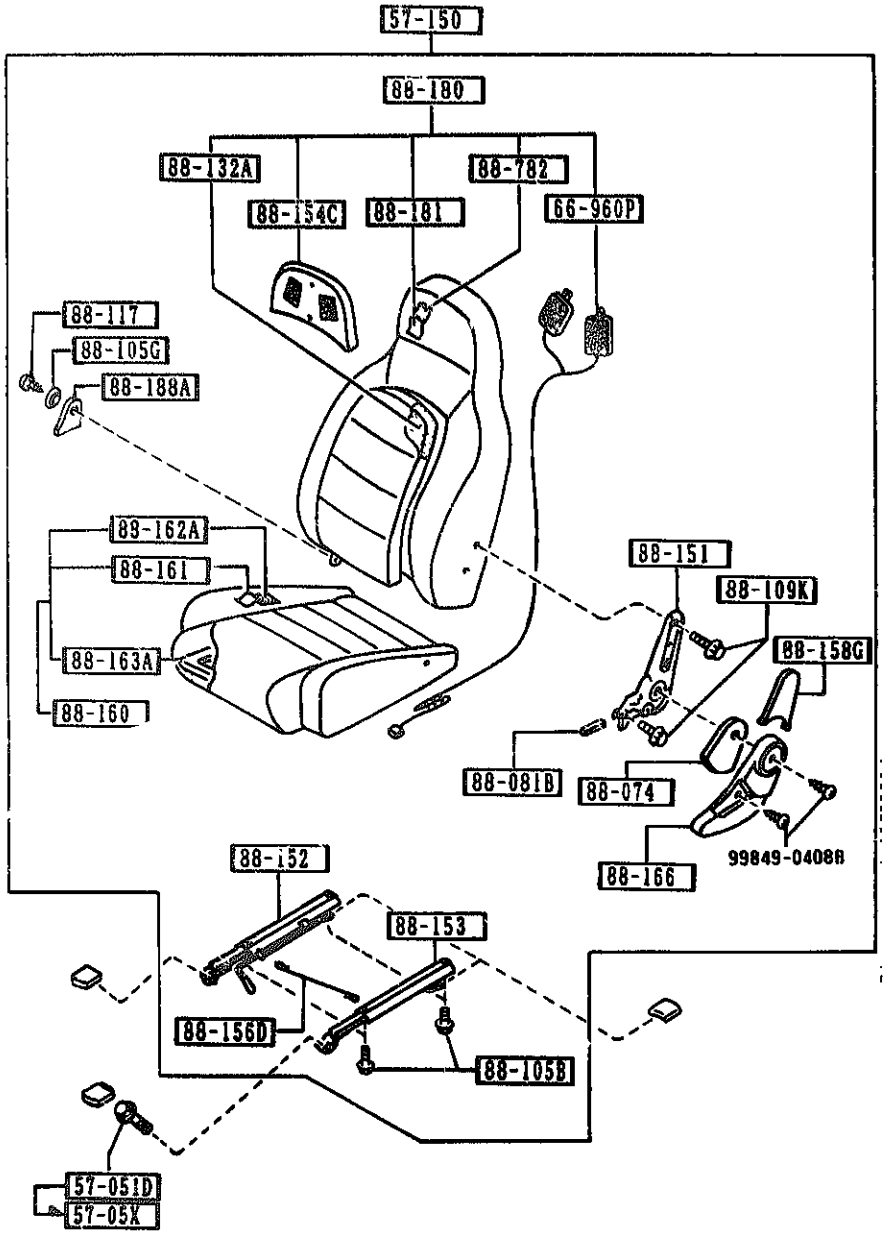

PART NO.	QTY	MODEL/RESTRICTION	MODEL/RESTRICTION	MODEL/RESTRICTION	FROM-TO
CONT'D					
00		NA0 BLACK			
NA02-57-150D A (NA02-57-150E)	1				9701-0201
00		NA0 BLACK			
NA01-57-150E A (NA01-57-150F)	1				0201-0601
00		NA0 BLACK			
NA02-57-150E A (NA02-57-150F)	1				0201-0601
00		NA0 BLACK			
NA01-57-150F	1	BASE, (CLOTH,W/O HEAD SPK.)			0601-
00		NA0 BLACK			
NA02-57-150F	1	PKG-OPT, (CLOTH,W/HEAD SPK.)			0601-
00		NA0 BLACK			
66-960P		SPEAKER,PILLOW-SEAT			
NA04-66-960A	2	PKG-OPT, (W/HEAD SPEAKER)			
88-024		PROTR(R),SEAT BELT			
NA01-88-033	1				
88-025A		KNOB(R),KNUCKLE			
NA01-88-034	1				
00		NA0 BLACK			
88-074		PROTR(L),SEAT BELT			
NA01-88-083	1				
88-081B		KNOB(L),KNUCKLE			
NA01-88-084	1				
00		NA0 BLACK			
88-101		KNUCKLE(R),RECLINING			
NA01-88-101 A (NA01-88-101A)	1				-0601
NA01-88-101A	1				0601-

9701 NA35##-111969
0201 NA35##-137180
0601 NA35##-154752

5700 SEATS (1/2)

(THIS ILLUSTRATION CONSISTS OF 2 PAGES)

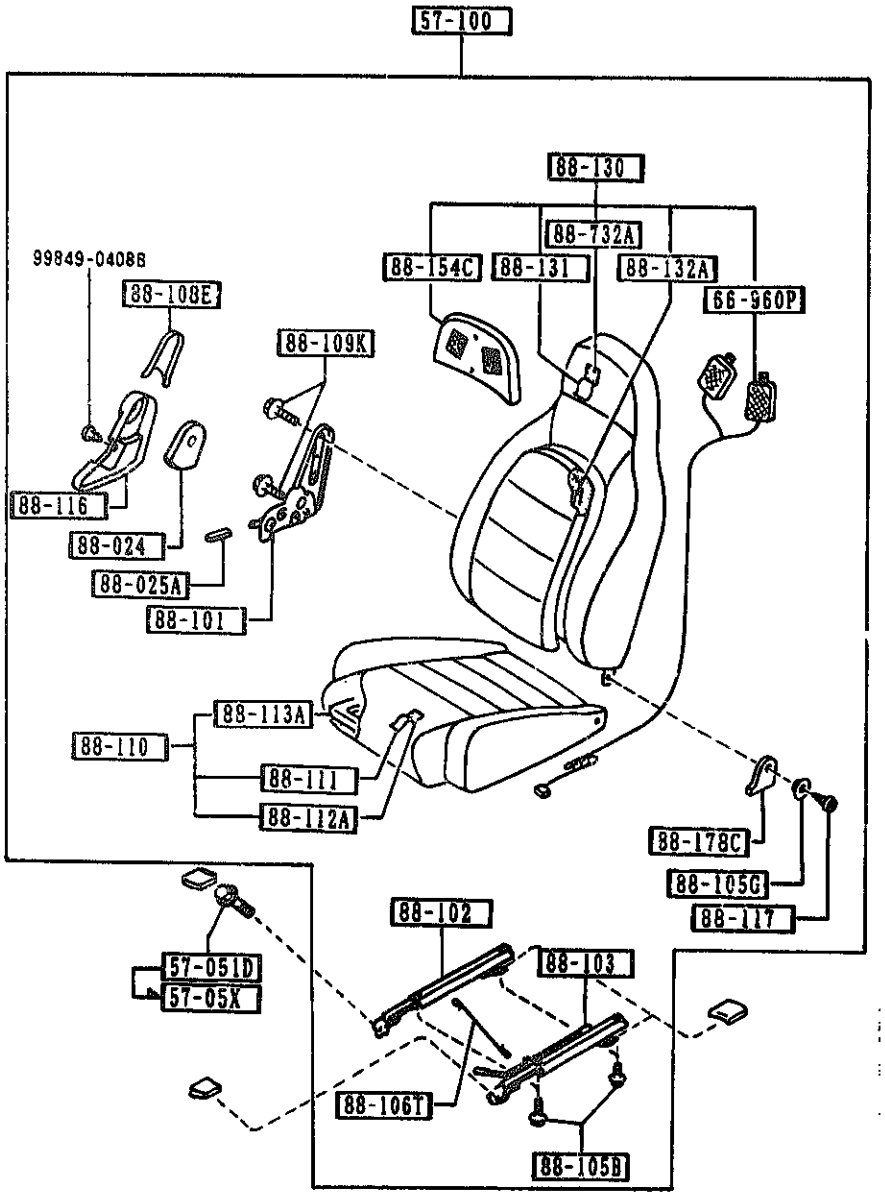

PART NO.	QTY	MODEL/RESTRICTION	MODEL/RESTRICTION	MODEL/RESTRICTION	FROM-TO
88-102		ADJUSTER,NO.1			
NA01-88-102	1				-0201
A (NA01-88-102A)					
NA01-88-102A	1				0201-
88-103		ADJUSTER,NO.2			
NA01-88-103	1				-0201
A (NA01-88-103A)					
NA01-88-103A	1				0201-
88-105B		BOLT,LINK			
H260-88-105	8				
88-105G		BUSH,HINGE			
H260-88-108	2				
02		NA0 BLACK			
88-106T		WIRE,CONNECT			
NA01-88-106	1				
88-108E		COVER(R),SEAT BACK			
NA01-88-036	1				
00		NA0 BLACK			
88-109K		SCREW,KNUCKLE			
H260-88-109	8				
88-110		CUSHION(R),FRT SEAT			
NA01-88-110	1	BASE, PKG-OPT, (CLOTH)			
00		NA0 BLACK			
88-111		TRIM(R),SEAT CUSHION			
NA01-88-111	1	BASE, PKG-OPT, (CLOTH)			
00		NA0 BLACK			
88-112A		PAD(R),CUSHION-FRT			
NA01-88-112	1				
88-113A		FRAME(R),CUSHION-FRT			

0201 NA35##-137180

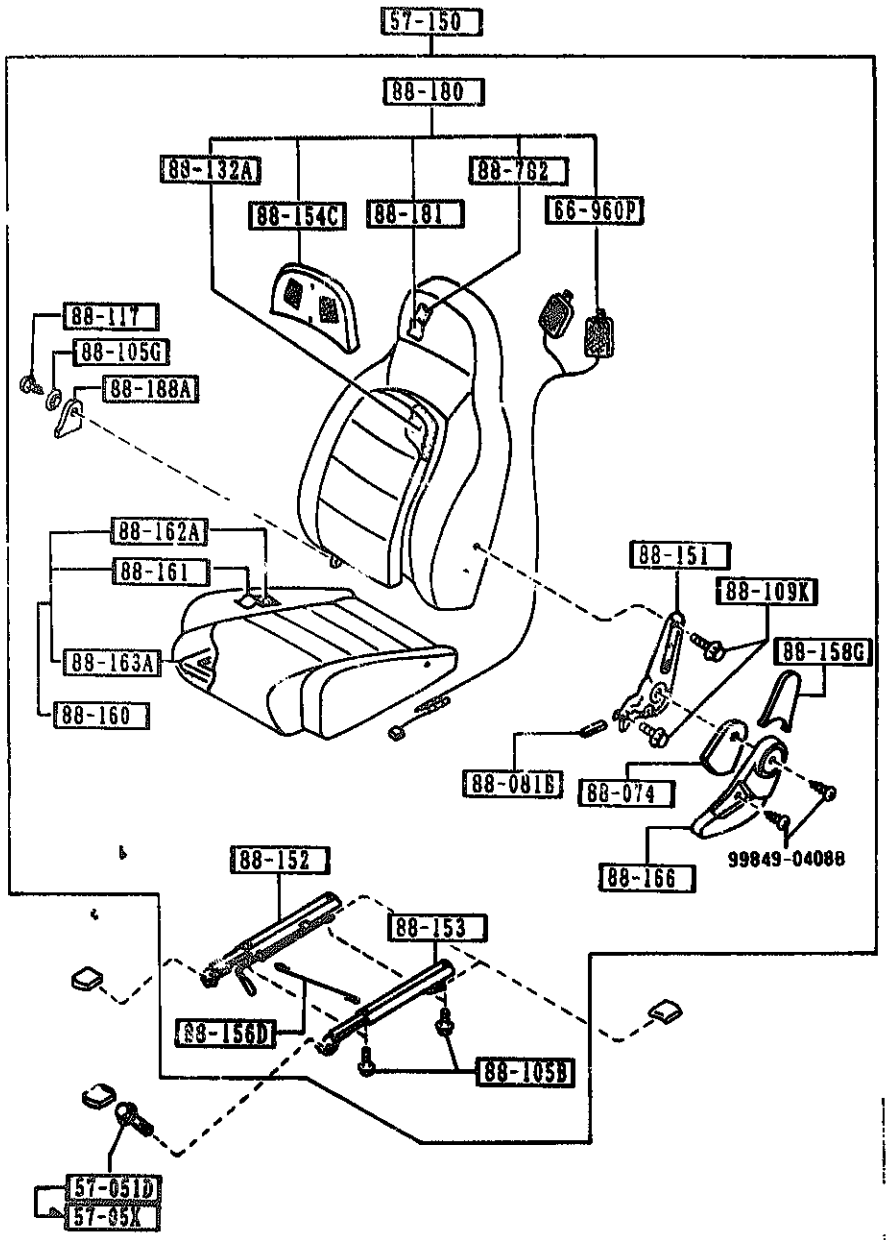

PART NO.	QTY	MODEL/RESTRICTION	MODEL/RESTRICTION	MODEL/RESTRICTION	FROM-TO
CONT'D NA01-88-113	1				
88-116		COVER(R),KNUCKLE			
NA01-88-031	1				
00		NA0 BLACK			
88-117		SCREW,KNUCKLE			
H260-68-107	2				
88-130		BACK(R),FRONT SEAT			
NA01-88-130	1	BASE, (CLOTH,W/O HEAD SPK.)			
00		NA0 BLACK			
NA02-88-130	1	PKG-OPT, (CLOTH,W/HEAD SPK.)			
00		NA0 BLACK			
88-131		TRIM(R),SEAT BACK			
NA01-88-131	1	BASE, PKG-OPT, (CLOTH)			
00		NA0 BLACK			
88-132A		PAD(R),BACK-FRT			
NA01-88-132	2				
88-151		KNUCKLE(L),RECLINING			
NA01-88-151 A (NA01-88-151A)	1				-0601
NA01-88-151A	1				0601-
88-152		ADJUSTER NO.3			
NA01-88-152 A (NA01-88-152A)	1				-0201
NA01-88-152A	1				0201-
88-153		ADJUSTER NO.4			
NA01-88-153 A (NA01-88-153A)	1				-0201
NA01-88-153A	1				0201-
88-154C		COVER,HEAD REST			

0201 NA35##-137180
0601 NA35##-154752

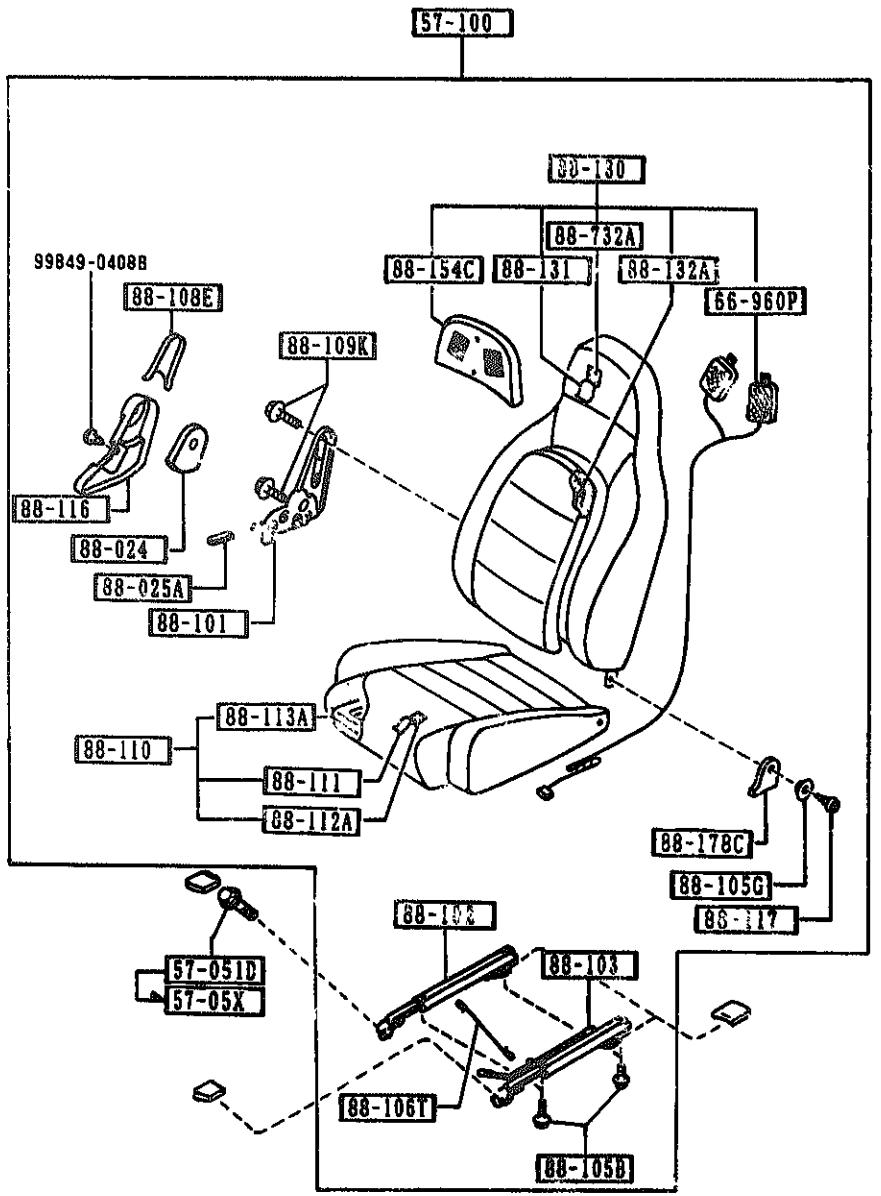

PART NO.	QTY	MODEL/RESTRICTION	MODEL/RESTRICTION	MODEL/RESTRICTION	FROM-TO
CONT'D					
NA01-88-137	2				
88-156D		WIRE,CONNECT			
NA01-88-156	1				
88-158Q		COVER(L),SEAT BACK			
NA01-88-086	1				
00		NA0 BLACK			
88-160		CUSHION(L),FRT SEAT			
NA01-88-160	1	BASE, PKG-OPT, (CLOTH)			
00		NA0 BLACK			
88-161		TRIM(L),SEAT CUSHION			
NA01-88-161	1	BASE, PKG-OPT, (CLOTH)			
00		NA0 BLACK			
88-162A		PAD(L),CUSHION-FRT			
NA01-88-162	1	BASE, PKG-OPT, (CLOTH)			
88-163A		FRAME(L),CUSHION-FRT			
NA01-88-163	1				
88-166		COVER(L),KNUCKLE			
NA01-88-081	1				
00		NA0 BLACK			
88-178C		COVER(R),HINGE			
NA01-88-035	1				
00		NA0 BLACK			
88-180		BACK(L),FRONT SEAT			
NA01-88-180	1	BASE, (CLOTH,W/O HEAD SPK.)			
00		NA0 BLACK			
NA02-88-180	1	PKG-OPT, (CLOTH,W/HEAD SPK.)			
00		NA0 BLACK			

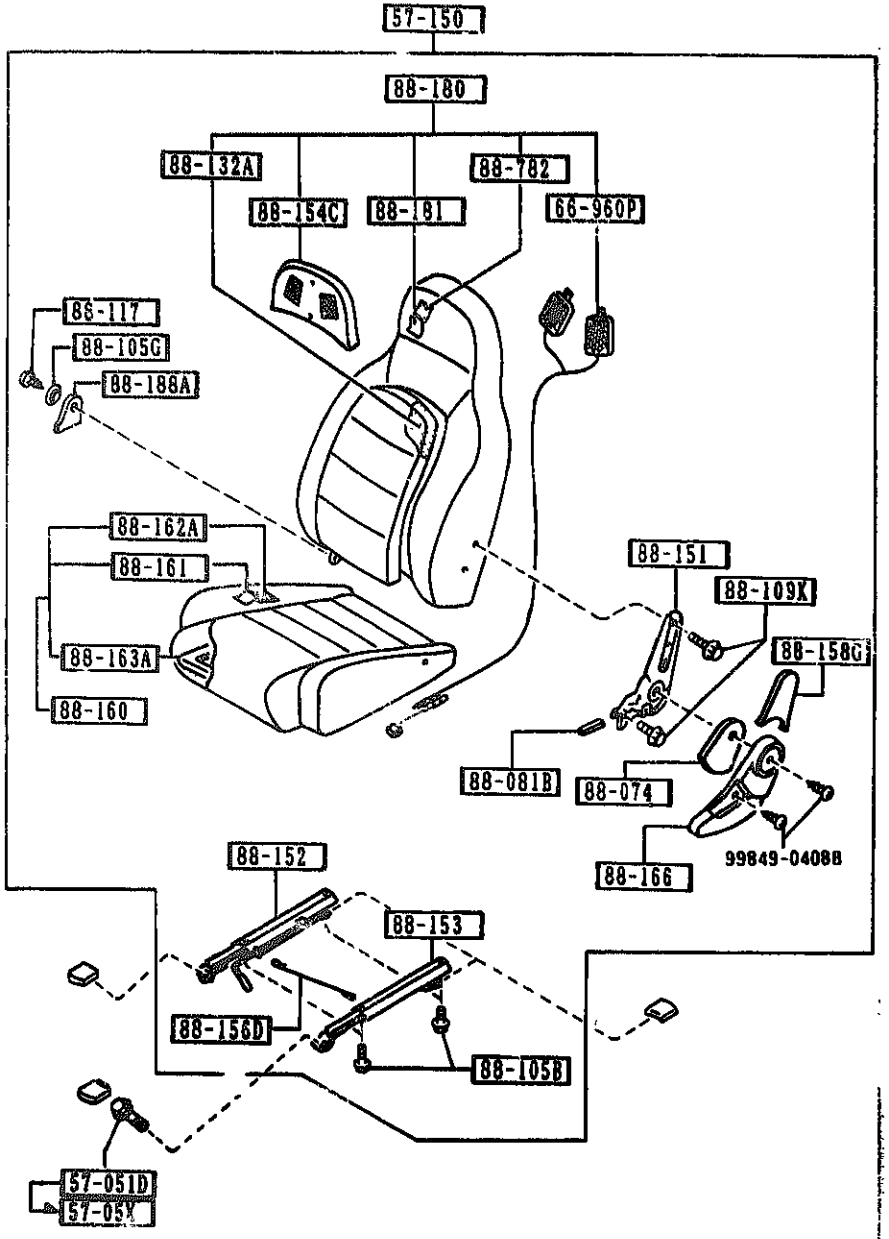

PART NO.	QTY	MODEL/RESTRICTION	MODEL/RESTRICTION	MODEL/RESTRICTION	FROM-TO
88-181		TRIM(L),SEAT BACK			
NA01-88-181	1	BASE, PKG-OPT, (CLOTH)			
00		NA0 BLACK			
88-188A		COVER(L),HINGE			
NA01-88-085	1				
00		NA0 BLACK			
88-732A		PAD'B'(R),BACK-FRT			
NA01-88-732	1				
88-782		PAD'B'(L),BACL-FRT			
NA01-88-782	1				

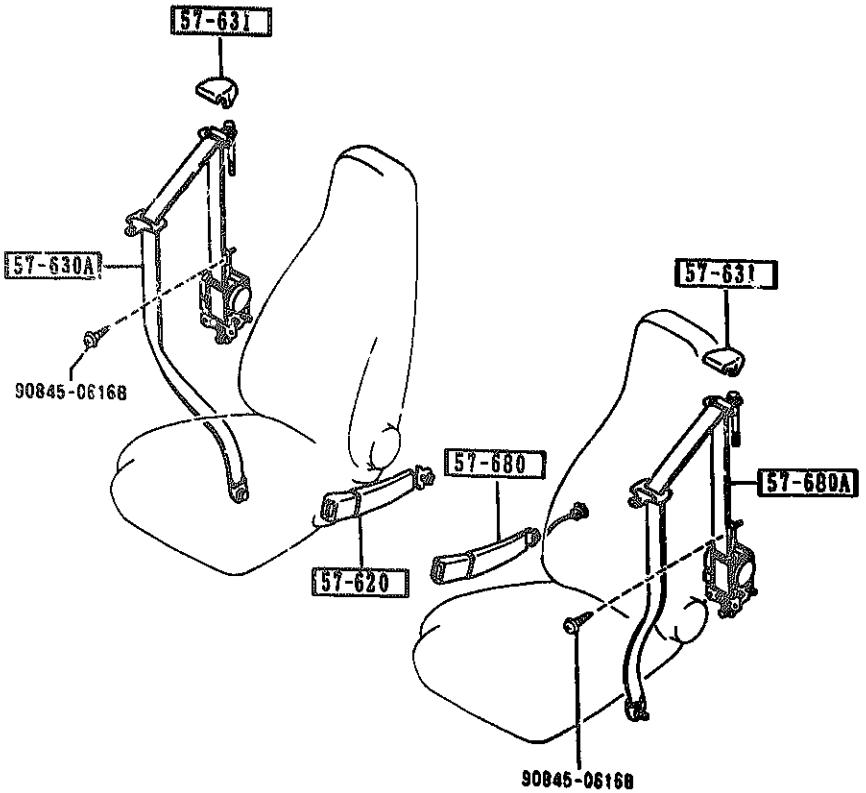

PART NO.	QTY	MODEL/RESTRICTION	MODEL/RESTRICTION	MODEL/RESTRICTION	FROM-TO
57-620		BELT'A',FRONT SEAT			
NA01-57-620	1				
00		NA0 BLACK			
57-630A		BELT'B'(R),FRT SEAT			
NA01-57-630C	1				
00		NA0 BLACK			
57-631		COVER,ANCHOR			
NA01-57-631B	2				
00		NA0 BLACK			
57-680		BELT'A',FRONT SEAT			
NA01-57-680	1				
00		NA0 NA1 BLACK			
57-680A		BELT'B'(L),FRT SEAT			
NA01-57-690A	1	(W/AIR BAG)			
00		NA0 BLACK			
NA07-57-690	1	(W/O AIR BAG)			0701-
00		NA0 BLACK			

0701 NA35##-200041

5800 -1 FRONT DOORS

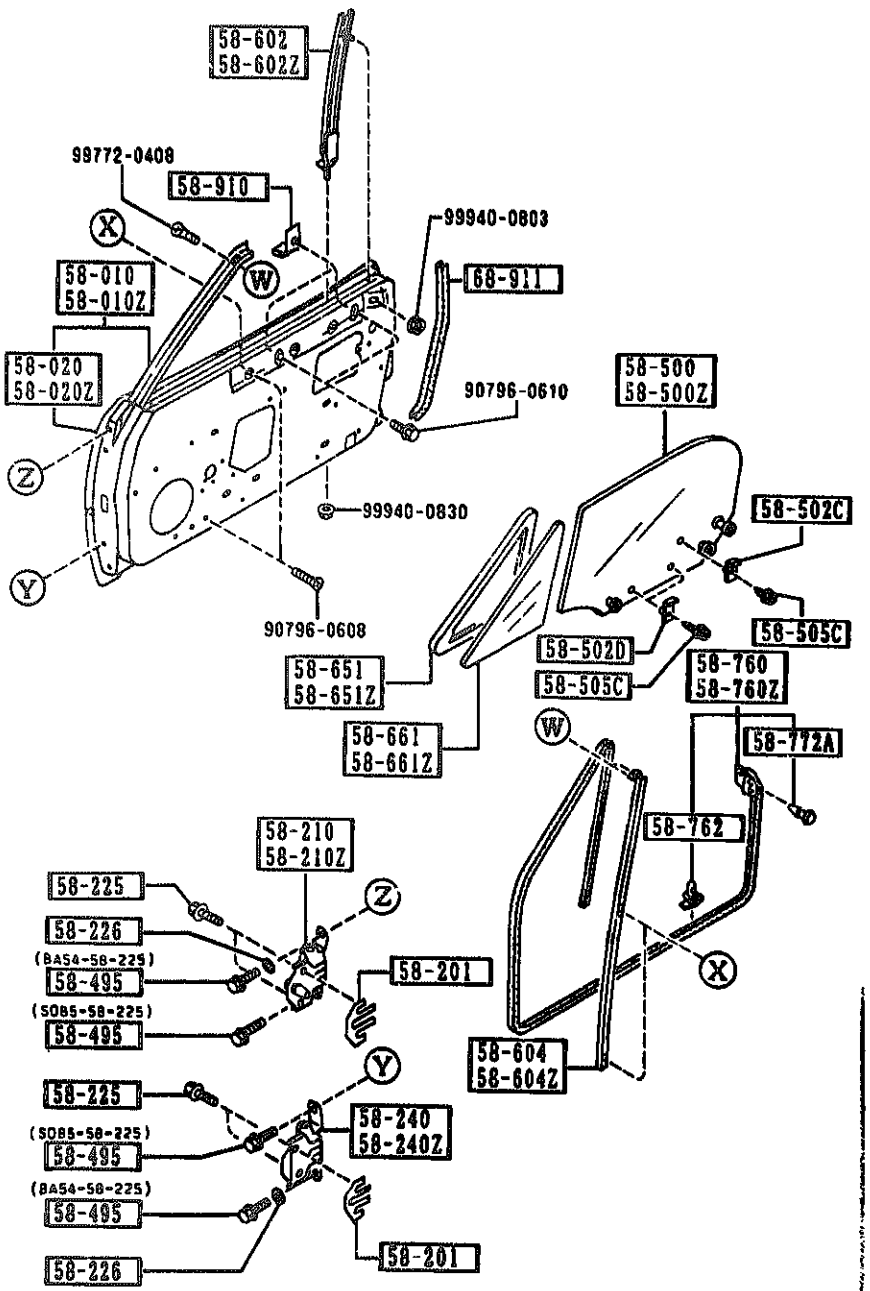

PART NO.	QTY	MODEL/RESTRICTION	MODEL/RESTRICTION	MODEL/RESTRICTION	FROM-TO
58-010		BODY(R),FRONT DOOR			
NAY1-58-020	1				
58-010Z		BODY(L),FRONT DOOR			
NAY1-59-020	1				
58-020		PANEL(R),OUT.-FRT DOOR			
NA01-58-030	1				-9413
AN(NA01-58-030A)					
NA01-58-030A	1				9413-
58-020Z		PANEL(L),OUT.-FRT DOOR			
NA01-59-030	1				-9413
AN(NA01-59-030A)					
NA01-59-030A	1				9413-
58-201		SHIM,HINGE-DOOR			
B092-58-201	4				-9901
AN(B092-58-201A)					
B092-58-201A	4				9901-
58-210		HINGE(R),DOOR-UPPER			
FB01-58-210	1				
58-210Z		HINGE(L),DOOR-UPPER			
FB01-59-210	1				
58-225		BOLT,SETTING-HINGE LOWER			
B455-58-225	8				
58-226		WASHER,SETTING			
BA56-72-226	4				-9510
GJ21-58-226	4				9510-
58-240		HINGE(R),DOOR-LOWER			
B156-58-240	1				
58-240Z		HINGE(L),DOOR-LOWER			
B156-59-240	1				
58-495		BOLT,SET			

9413 NA35##-100500
9510 NA35##-102968
9901 NA35##-119257

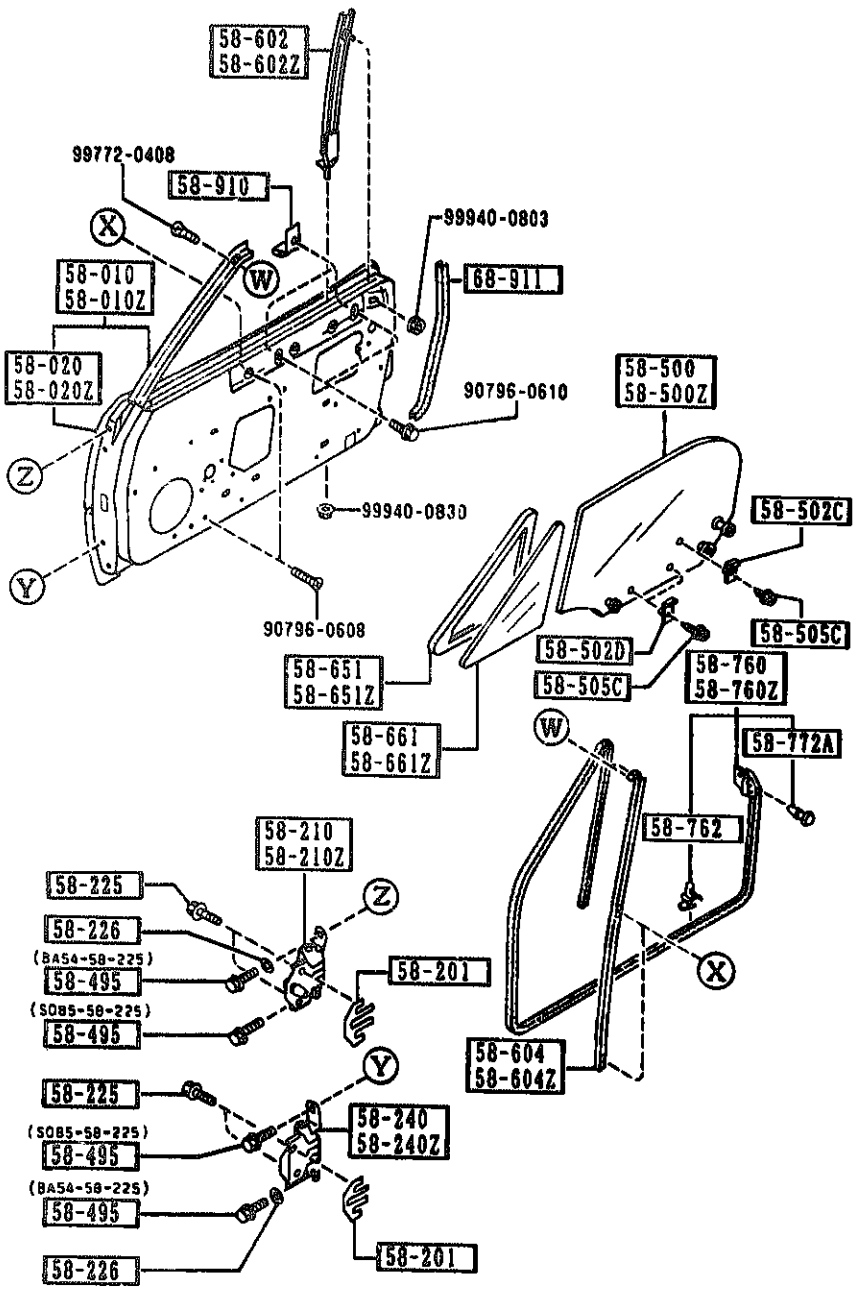

PART NO.	QTY	MODEL/RESTRICTION	MODEL/RESTRICTION	MODEL/RESTRICTION	FROM TO
CONT'D					
BA54-58-225	4				
SO85-58-225	4				
58-500		GLASS(R),DOOR-FRT			
NA01-58-510	1				
58-500Z		GLASS(L),DOOR-FRT			
NA01-59-510	1				
58-502C		GROMMET,SCREW			
8235-58-502	2				
58-502D		GROMMET,SCREW-DOOR GLASS			
UB39-58-502A	4				
58-505C		SCREW,WINDOW REGULATOR			
8092-58-505	6				
58-602		GUIDE'B'(R),GLASS			
NA01-58-603A	1				
58-602Z		GUIDE'B'(L),GLASS			
NA01-59-603A	1				
58-604		CHANNEL(R),DIVISION-DOOR			
NA01-58-604B	1				
58-604Z		CHANNEL(L),DIVISION-DOOR			
NA01-59-604B	1				
58-651		WEATHERSTRIP(R)			
NA01-58-651A	1				
58-651Z		WEATHERSTRIP(L)			
NA01-59-651A	1				
58-661		GLASS(R),VENTILATOR			
NA01-58-661	1				
58-661Z		GLASS(L),VENTILATOR			
NA01-59-661	1				

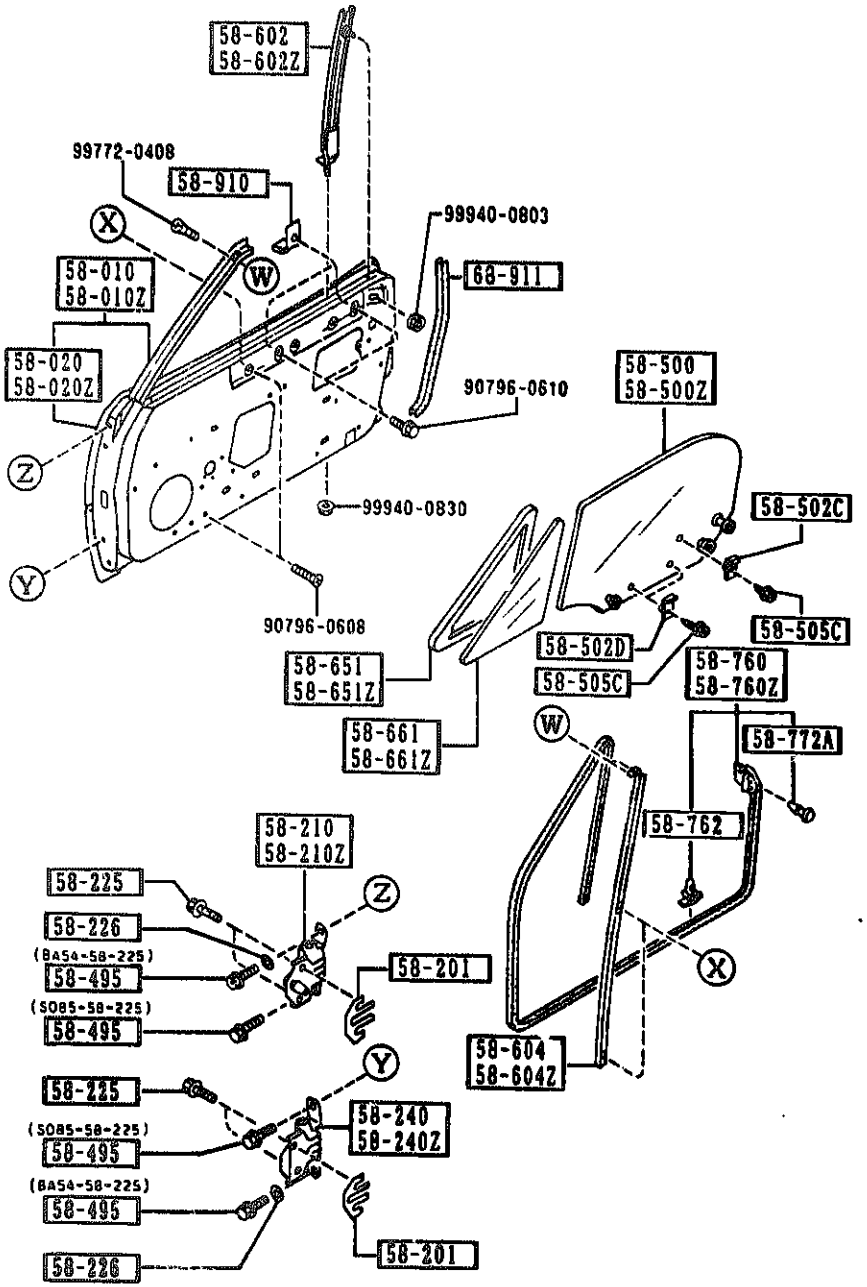

PART NO.	QTY	MODEL/RESTRICTION	MODEL/RESTRICTION	MODEL/RESTRICTION	FROM-TO
58-760		WEATHERSTRIP(R),DOOR			
NA01-58-760C A (NA01-58-760D)	1				-9403
NA01-58-760D	1				9403-
58-760Z		WEATHERSTRIP(L),DOOR			
NA01-59-760C A (NA01-59-760D)	1				-9403
NA01-59-760D	1				9403-
58-762		FASTENER			
G031-58-762	42				
58-772A		FASTENER			
1011-58-772	4				
58-910		STOPPER,GLASS			
H272-58-911	4				
68-911		WELT,SEAMING			
NA01-68-911	2				
00		NA0 BLACK			

9403 NA35##-100090

SECTION NAME INDEX (BODY)

LO.NO	SEC.NO	SECTION NAME
2-C05	0900	KEY SETS
2-E05	5000	FRONT BUMPER
2-H05	5010	REAR BUMPER
2-J05	5030	WINDOW MOULDING & COWL GRILLES
2-L05	5100	HEAD LAMPS
2-M05	5103	HEAD LAMP RETRACTORS
2-D06	5105	FRONT COMBINATION LAMPS
2-F06	5110	REAR COMBINATION LAMPS
2-I06	5120	LICENSE LAMPS
2-J06	5180	REAR FINISHER
2-L06	5230	BONNET
2-N06	5260	TRUNK LID
2-D07	5310	BODY PANELS (FRONT)
2-E07	5320	BODY PANELS (FENDER & WHEEL APRON)
2-H07	5330	BODY PANELS (DASH & COWL PANEL)
2-I07	5340	BODY PANELS (SIDE)
2-C08	5370	BODY PANELS (FLOOR)
2-F08	5380	FLOOR ATTACHMENTS (HOLE COVERS)
2-G08	5390	FLOOR ATTACHMENTS
2-C09	5500	DASHBOARD EQUIPMENTS
2-E09	5520	METER HOOD
2-F09	5530	SPEEDOMETER CABLE
2-G09	5540	METER COMPONENTS
2-I09	5560	DASHBOARD & RELATED PARTS
2-L09	5570	CONSOLE
2-C10	5580	VENTILATOR
2-D10	5700	SEATS
2-K10	5790	SEAT BELTS
2-L10	5800	FRONT DOORS
2-C11	5830	FRONT DOOR MECHANISMS
2-F11	5840	FRONT DOOR TRIMS & RELATED PARTS
2-C12	6100	HEATER
2-D12	6110	HEATER UNIT COMPONENTS
2-E12	6115	HEATER CONTROLS COMPONENTS
2-F12	6120	HEATER BLOWER COMPONENTS
2-G12	6130	AIR CONDITIONER
2-K12	6135	O RING SET,PIPING
2-L12	6140	COMPRESSOR COMPONENTS (AIR CONDITIONER)
2-N12	6150	COOLING UNIT (AIR CONDITIONER)
2-C13	6300	WINDOW GLASSES
2-D13	6330	SUNROOF
2-M13	6600	SWITCHES & RELAYS (ENGINE)
2-D14	6610	DASHBOARD SWITCHES
2-E14	6611	COMBINATION SWITCH
2-F14	6630	RELAYS & UNIT (BODY)
2-G14	6635	DOOR SWITCH & HORNS
2-H14	6640	AUTO CRUISE CONTROL SYSTEM
2-I14	6680	AUDIO SYSTEMS (RADIO & TAPE DECK)
2-K14	6682	AUDIO SYSTEMS (ANTENNA & SPEAKER)
2-L14	6700	WIRING HARNESSES(FRONT & REAR)
2-N14	6701	WIRING HARNESSES(ENGINE & T/MISSION)
2-D15	6702	WIRING HARNESSES(DASHBOARD)
2-E15	6703	WIRING HARNESSES(DOOR,FLOOR/CEILING)
2-F15	6704	WIRING HARNESS CLAMPS
2-I15	6720	WINDSHIELD WASHER
2-K15	6730	WINDSHIELD WIPERS
2-M15	6740	WIPER MOTOR COMPONENTS(FRONT)
2-N15	6820	FRONT HEADER TRIM & PILLAR TRIMS
2-C16	6840	TRIMS & SCUFF PLATES
2-E16	6860	FLOOR MATS & PADS
2-G16	6870	SERVICE TOOLS
2-[illegible]16	6900	VISORS,ASSIST HANDLES & MIRRORS
2-[illegible]	6930	CAUTION PLATES & LABELS
2-L16	7250	QUARTER WINDOW & TRIMS
3-C03	7900	ACCESSORIES

CATLOG-NO= AUNA01-07

DATE. 1992-02

5830 -1 FRONT DOOR MECHANISMS

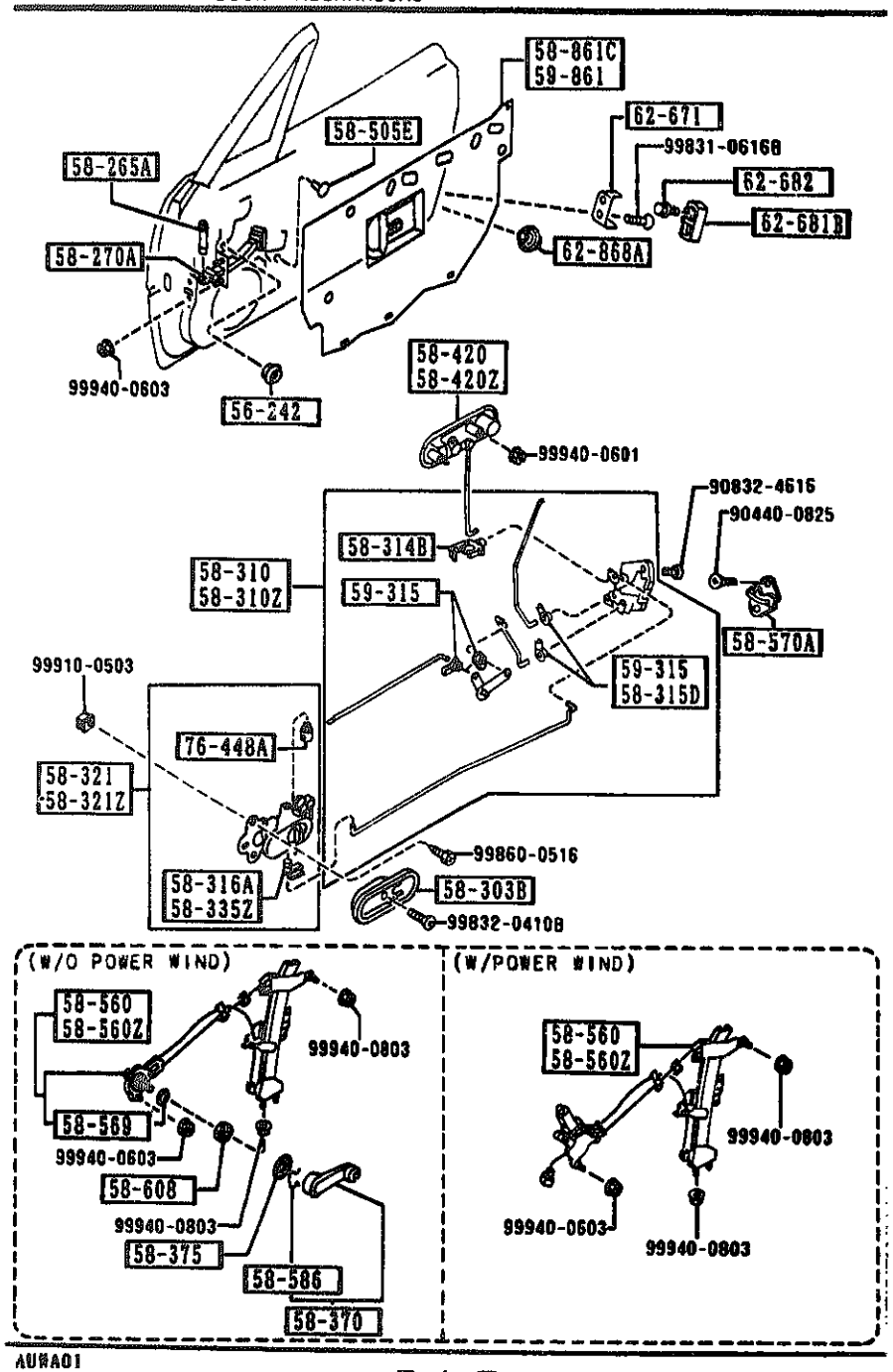

PART NO.	QTY	MODEL/RESTRICTION	MODEL/RESTRICTION	MODEL/RESTRICTION	FROM-TO
56-242		PLUG,DRAIN			
0118-56-242B	2				
58-265A		PIN,CHECKER			
H260-58-265C	2				
58-270A		CHECKER,DOOR			
NA01-58-270A	2				
58-303B		COVER,INNER HANDLE			
NA01-58-303	2				
0C		NA0 NA1 BLACK			
58-310		LOCK(R),DOOR			
NA01-58-310B	1				
58-310Z		LOCK(L),DOOR			
NA01-59-310B	1				
58-314B		JOINT			
H043-72-411	2				
58-315D		CLIP (R)			
G030-58-315	4				
58-316A		CLIP			
B001-59-335	1				
58-321		HANDLE(R),INNER			
NA01-58-330A	1				
00		NA0 NA1 BLACK			
58-321Z		HANDLE(L),INNER			
NA01-59-330A	1				
00		NA0 NA1 BLACK			
58-335Z		CLIP(L),INNER HANDLE			
F801-58-335	1				
58-370		HANDLE,REGULATOR			

5830 FRONT DOOR MECHANISMS

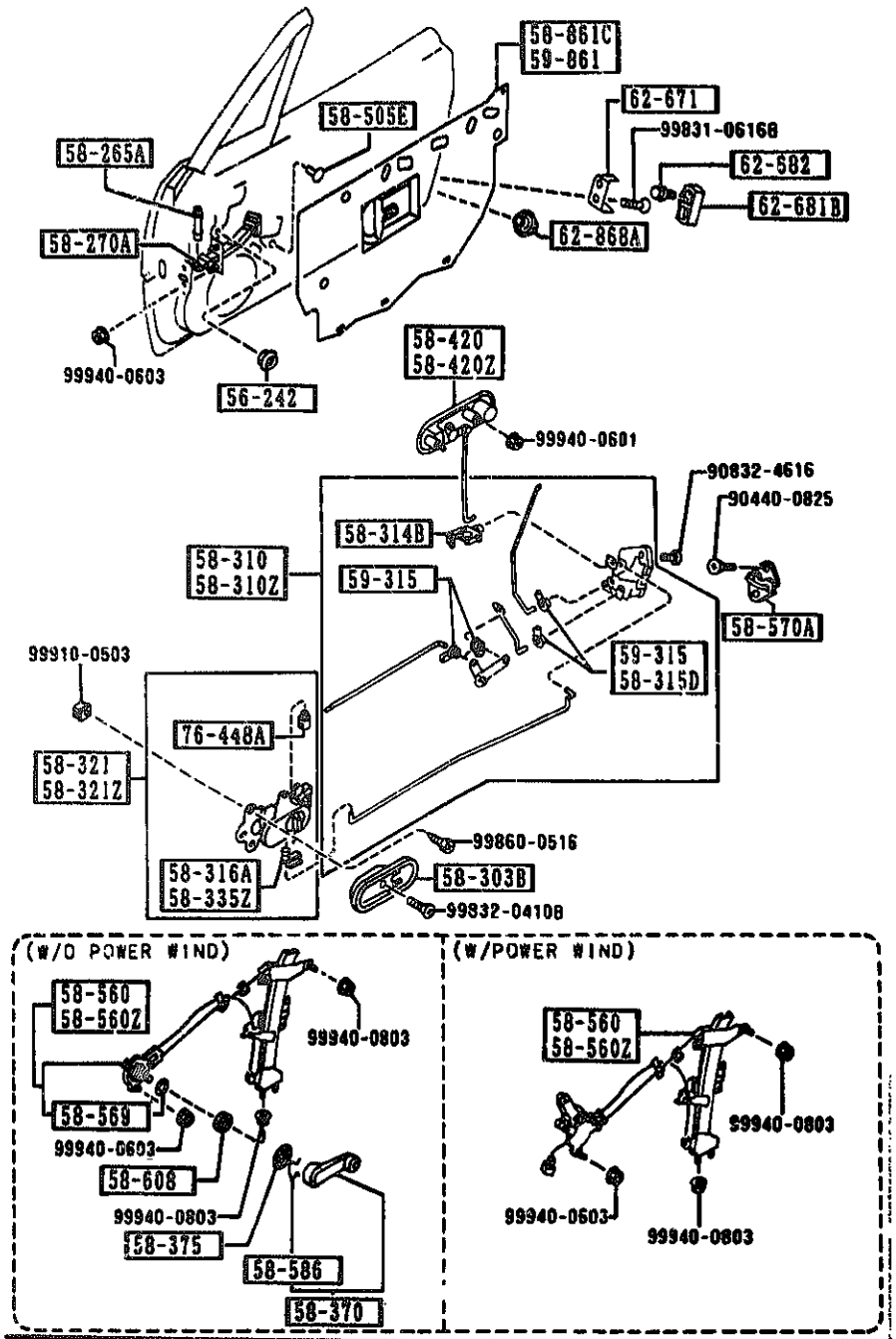

PART NO.	QTY	MODEL/RESTRICTION	MODEL/RESTRICTION	MODEL/RESTRICTION	FROM-TO
CONT'D					
B092-58-580	2	BASE, (W/O POWER WIND)			
0C		NA0 NA1 BLACK			
58-375		ESCUSTCHEON			
B001-58-582A	2	BASE, (W/O POWER WIND)			
00		NA0 NA1 BLACK			
58-420		HANDLE(R),OUT.			
NA01-58-410A	1				-9413
AN(NA01-58-410B)					
NA01-58-410B	1				9413-9627
A (NA01-58-410C)					
NA01-58-410C	1				9627-
58-420Z		HANDLE(L),OUT.			
NA01-59-410A	1				-9413
AN(NA01-59-410B)					
NA01-59-410B	1				9413-9627
A (NA01-59-410C)					
NA01-59-410C	1				9627-
58-505E		CAP			
B092-58-355	2	BASE, (W/O POWER WIND)			
58-560		REGULATOR(R),WINDOW			
NA01-58-560B	1	BASE, (W/O POWER WIND)			
NA02-58-560B	1	PKG-OPT, V-SPECIAL, (W/POWER WIND)			
58-560Z		REGULATOR(L),WINDOW			
NA01-59-560B	1	BASE, (W/O POWER WIND)			
NA02-59-560B	1	PKG-OPT, V-SPECIAL, (W/POWER WIND)			
58-569		GASKET,WINDOW REGULATOR			
B092-58-569	2	BASE, (W/O POWER WIND)			
58-570A		STRIKER			

9413 NA35##-100500
9627 NA35##-111215

5830 FRONT DOOR MECHANISMS

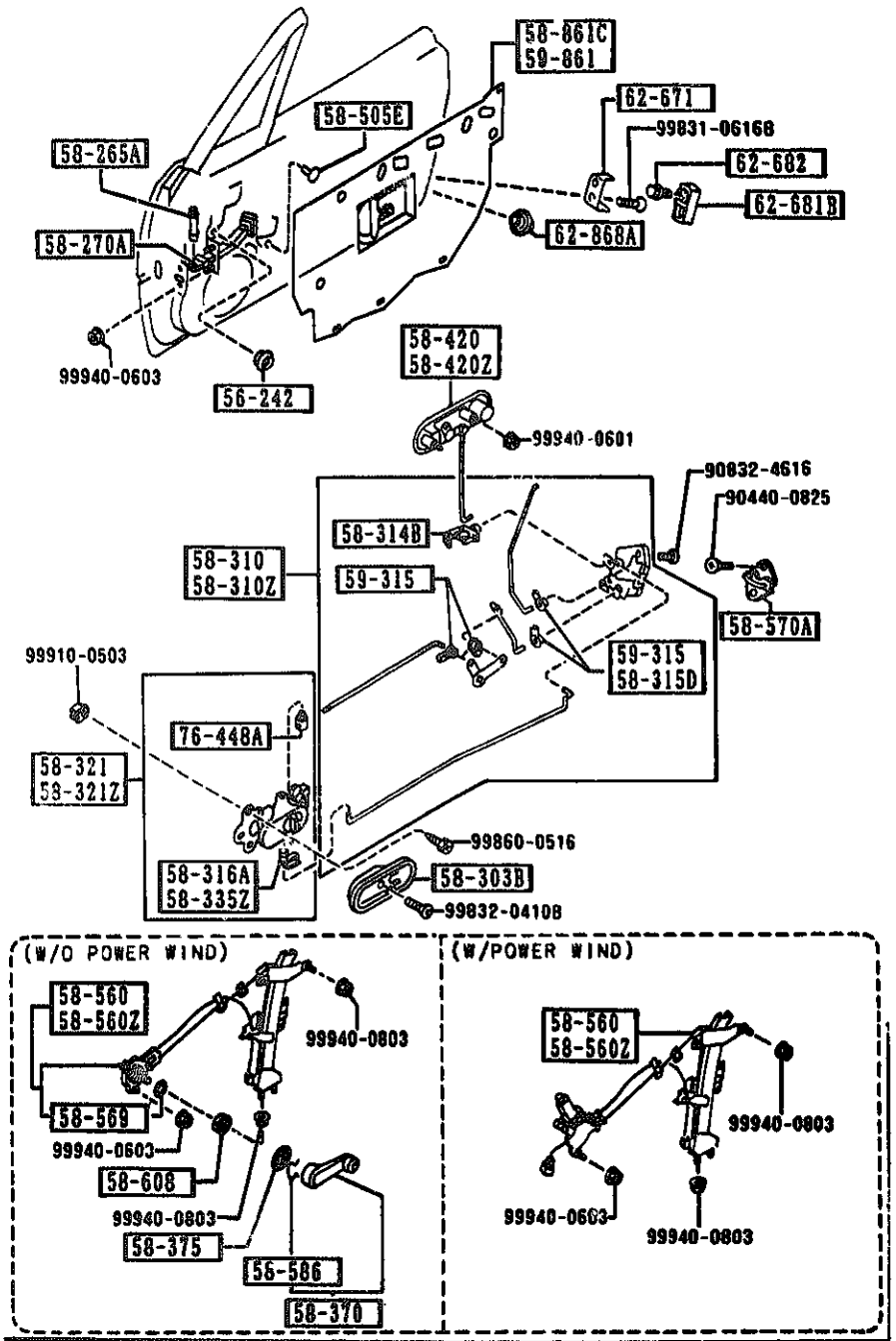

PART NO.	QTY	MODEL/RESTRICTION	MODEL/RESTRICTION	MODEL/RESTRICTION	FROM-TO
CONT'D					
B001-58-361A	2				
58-586		RING,SNAP			
B001-58-585	2	BASE, (W/O POWER WIND)			
58-608		PAD			
B092-58-863A	2	BASE, (W/O POWER WIND)			
58-861C		SCREEN(R),FRONT DOOR			
NA01-58-861A	1	BASE, (W/O POWER WIND)			
NA02-58-861A	1	PKG-OPT, V-SPECIAL, (W/POWER WIND)			
59-315		CLIP			
G030-59-315	4				
59-861		SCREEN(L),FRONT DOOR			
NA01-59-861A	1	BASE, (W/O POWER WIND)			
NA02-59-861A	1	PKG-OPT, V-SPECIAL, (W/POWER WIND)			
62-671		DOVETAIL,LIFT GATE			
S084-62-671	2				
62-681B		WEDGE,DOOR-FRONT			
NA01-62-681	2				
62-682		SCREW,WEDGE-LIFT GATE			
B216-62-682	4				
62-868A		COVER,HOLE-LIFT GATE			
B499-62-868	2				
76-448A		CLIP			
G030-76-448	2				

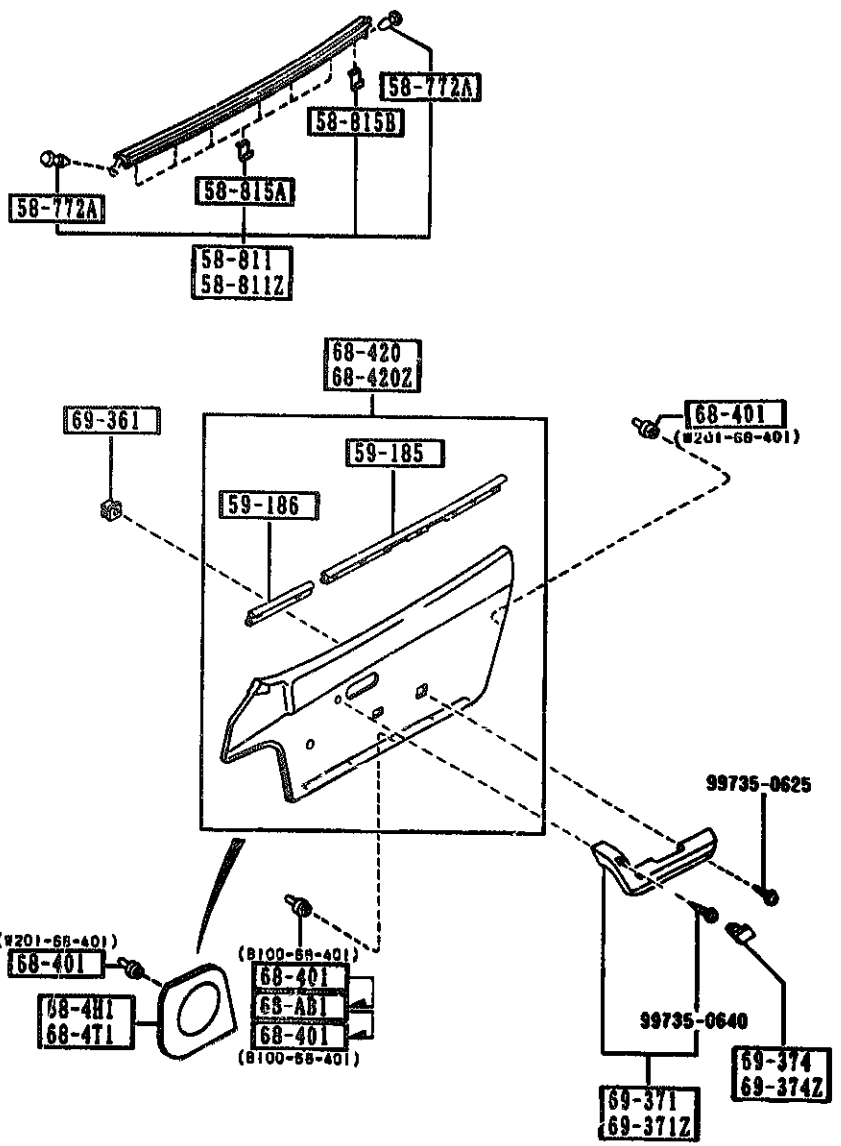

PART NO.	QTY	MODEL/RESTRICTION	MODEL/RESTRICTION	MODEL/RESTRICTION	FROM-TO
58-772A		FASTENER			
1011-58-772	4				
58-811		WEATHERSTRIP(R),OUT.			
NA01-58-810B AN(NA01-58-810C)	1				-9607
NA01-58-810C AN(NA01-58-810D)	1				9607-0306
NA01-58-810D	1				0306-
58-811Z		WEATHERSTRIP(L),OUT.			
NA01-59-810B AN(NA01-59-810C)	1				-9607
NA01-59-810C AN(NA01-59-810D)	1				9607-0306
NA01-59-810D	1				0306-
58-815A		CLIP,WEATHERSTRIP-OUTER			
B156-58-815	12				-9607
NA01-58-815	12				9607-
58-815B		CLIP'A',WEATHERSTRIP-OUT			
B157-58-815	2				
59-185		WEATHERSTRIP NO.1			
NA01-58-821	2				
59-186		WEATHERSTRIP NO.2			
NA02-58-821	2				
68-AB1		FASTENER			
G351-68-ABX	10				9C01-0601
68-4H1		GRILLE(R),SPEAKER			
NA01-68-4H0	1				
00		NA0 NA1 BLACK			
68-4T1		GRILLE(L),SPEAKER			
NA01-68-4W0	1				
00		NA0 NA1 BLACK			

9607 NA35##-107883
9C01 NA35##-130310
0306 NA35##-142598
0601 NA35##-154752

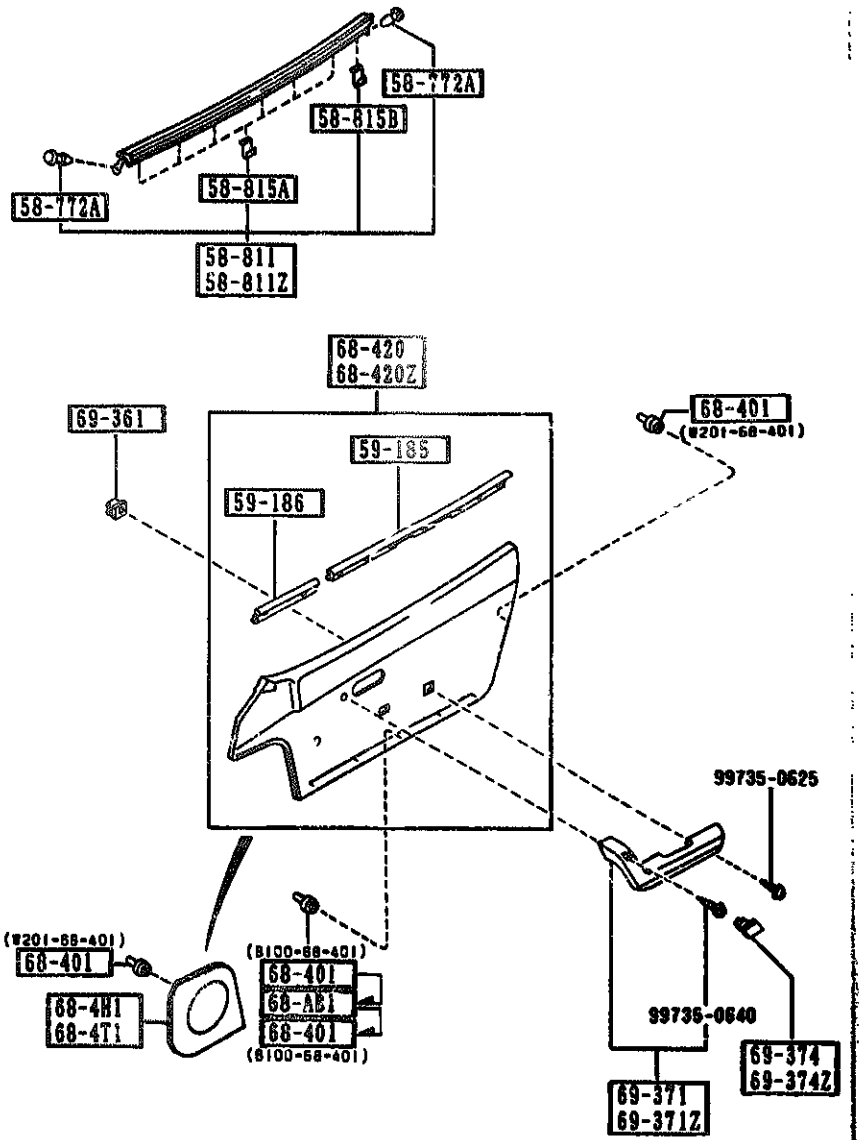

PART NO.	QTY	MODEL/RESTRICTION	MODEL/RESTRICTION	MODEL/RESTRICTION	FROM-TO
68-401		FASTENER,DOOR TRIM			
W201-68-401	12				
B100-68-401	10				-9C01
B100-68-401	10				0601-
68-420		TRIM(R),DOOR			
NA01-68-420B	1	BASE, (W/O POWER WIND)			
00		NA0 BLACK			
NA02-68-420B	1	PKG-OPT, V-SPECIAL, (W/POWER WIND)			
00		NA0 BLACK			
68-420Z		TRIM(L),DOOR			
NA01-68-450B	1	BASE, (W/O POWER WIND)			
00		NA0 BLACK			
NA02-68-450B	1	PKG-OPT, V-SPECIAL, (W/POWER WIND)			
00		NA0 BLACK			
69-361		GROMMET,SCREW			
B316-69-361	6				
69-371		REST(R),ARM			
BF70-69-370C	1				
00		NA0 NA1 BLACK			
69-371Z		REST(L),ARM			
BF70-69-390C	1				
00		NA0 NA1 BLACK			
69-374		CAP(R),PULL HANDLE			
BF70-69-372	1				
00		NA0 NA1 BLACK			
69-374Z		CAP(L),PULL HANDLE			
BF70-69-392	1				
00		NA0 NA1 BLACK			

9C01 NA35##-130310
0601 NA35##-154752

SECTION NAME INDEX (BODY)

LO.NO	SEC.NO	SECTION NAME
2-C05	0900	KEY SETS
2-E05	5000	FRONT BUMPER
2-H05	5010	REAR BUMPER
2-J05	5030	WINDOW MOULDING & COWL GRILLES
2-L05	5100	HEAD LAMPS
2-M05	5103	HEAD LAMP RETRACTORS
2-D06	5105	FRONT COMBINATION LAMPS
2-F06	5110	REAR COMBINATION LAMPS
2-I06	5120	LICENSE LAMPS
2-J06	5180	REAR FINISHER
2-L06	5230	BONNET
2-N06	5260	TRUNK LID
2-D07	5310	BODY PANELS (FRONT)
2-E07	5320	BODY PANELS (FENDER & WHEEL APRON)
2-H07	5330	BODY PANELS (DASH & COWL PANEL)
2-I07	5340	BODY PANELS (SIDE)
2-C08	5370	BODY PANELS (FLOOR)
2-F08	5380	FLOOR ATTACHMENTS (HOLE COVERS)
2-G08	5390	FLOOR ATTACHMENTS
2-C09	5500	DASHBOARD EQUIPMENTS
2-E09	5520	METER HOOD
2-F09	5530	SPEEDOMETER CABLE
2-G09	5540	METER COMPONENTS
2-I09	5560	DASHBOARD & RELATED PARTS
2-L09	5570	CONSOLE
2-C10	5580	VENTILATOR
2-D10	5700	SEATS
2-K10	5790	SEAT BELTS
2-L10	5800	FRONT DOORS
2-C11	5830	FRONT DOOR MECHANISMS
2-F11	5840	FRONT DOOR TRIMS & RELATED PARTS
2-C12	6100	HEATER
2-D12	6110	HEATER UNIT COMPONENTS
2-E12	6115	HEATER CONTROLS COMPONENTS
2-F12	6120	HEATER BLOWER COMPONENTS
2-G12	6130	AIR CONDITIONER
2-K12	6135	O RING SET,PIPING
2-L12	6140	COMPRESSOR COMPONENTS (AIR CONDITIONER)
2-N12	6150	COOLING UNIT (AIR CONDITIONER)
2-C13	6300	WINDOW GLASSES
2-D13	6330	SUNROOF
2-M13	6600	SWITCHES & RELAYS (ENGINE)
2-D14	6610	DASHBOARD SWITCHES
2-E14	6611	COMBINATION SWITCH
2-F14	6630	RELAYS & UNIT (BODY)
2-G14	6635	DOOR SWITCH & HORNS
2-H14	6640	AUTO CRUISE CONTROL SYSTEM
2-I14	6680	AUDIO SYSTEMS (RADIO & TAPE DECK)
2-K14	6682	AUDIO SYSTEMS (ANTENNA & SPEAKER)
2-L14	6700	WIRING HARNESSES(FRONT & REAR)
2-N14	6701	WIRING HARNESSES(ENGINE & T/MISSION)
2-D15	6702	WIRING HARNESSES(DASHBOARD)
2-E15	6703	WIRING HARNESSES(DOOR,FLOOR/CEILING)
2-F15	6704	WIRING HARNESS CLAMPS
2-I15	6720	WINDSHIELD WASHER
2-K15	6730	WINDSHIELD WIPERS
2-M15	6740	WIPER MOTOR COMPONENTS(FRONT)
2-N15	6820	FRONT HEADER TRIM & PILLAR TRIMS
2-C16	6840	TRIMS & SCUFF PLATES
2-E16	6860	FLOOR MATS & PADS
2-G16	6870	SERVICE TOOLS
2-H16	6900	VISORS,ASSIST HANDLES & MIRRORS
2-J16	6930	CAUTION PLATES & LABELS
2-[illegible]	7250	QUARTER WINDOW & TRIMS
3-C03	7900	ACCESSORIES

CATLOG-NO= AUNA01-07

DATE. 1992-02

6100 HEATER

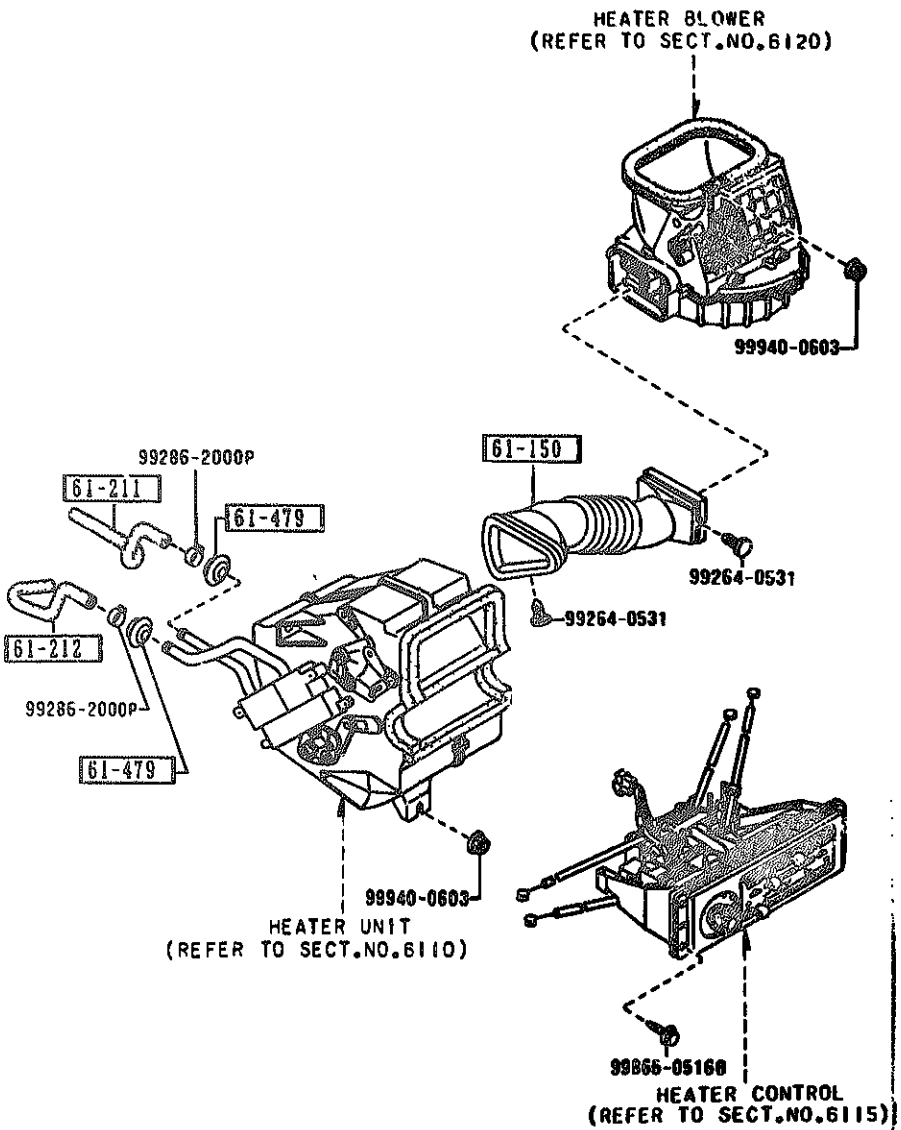

PART NO.	QTY	MODEL/RESTRICTION	MODEL/RESTRICTION	MODEL/RESTRICTION	FROM-TO
61-150		DUCT,AIR			
NA01-61-150 G (NA01-61-150A)	1				-9A01
NA01-61-150A	1				9A01-
61-211		HOSE NO.1,WATER			
NA01-61-211	1				
61-212		HOSE NO.2,WATER			
NA01-61-212 A (NA01-61-212A)	1				-9601
NA01-61-212A	1				9601-
61-479		GROMMET			
3871-61-219A	2				

9601 NA35##-106797
9A01 NA35##-122908

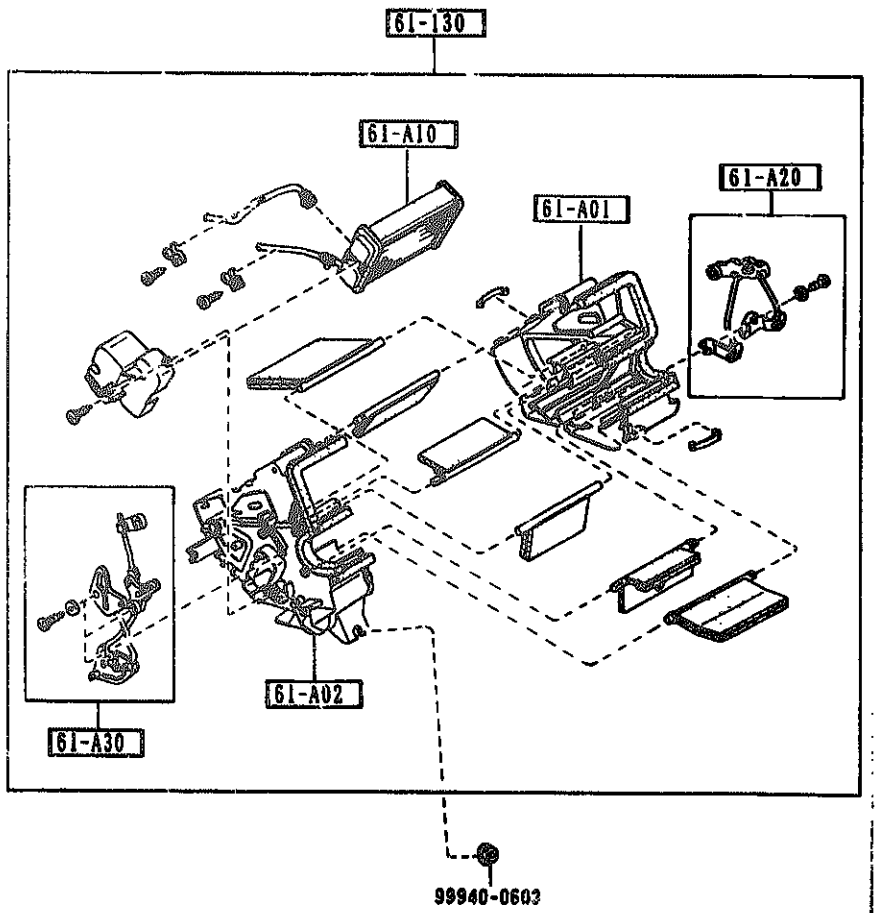

PART NO.	QTY	MODEL/RESTRICTION	MODEL/RESTRICTION	MODEL/RESTRICTION	FROM-TO
61-A01		CASE'A',HEATER UNIT			
NA01-61-A01	1				
61-A02		CASE'B',HEATER UNIT			
NA01-61-A02	1				
61-A10		CORE,HEATER UNIT			
NA01-61-A10	1				
61-A20		LINK SET,TEMP			
NA01-61-A20	1				
61-A30		LINK SET,MODE			
NA01-61-A30	1				
61-130		HEATER UNIT			
NA01-61-130	1				-9A01
G (NA01-61-130A)					
NA01-61-130A	1				9A01-

9A01 NA35##-122908

6115 -1 M HEATER CONTROLS COMPONENTS

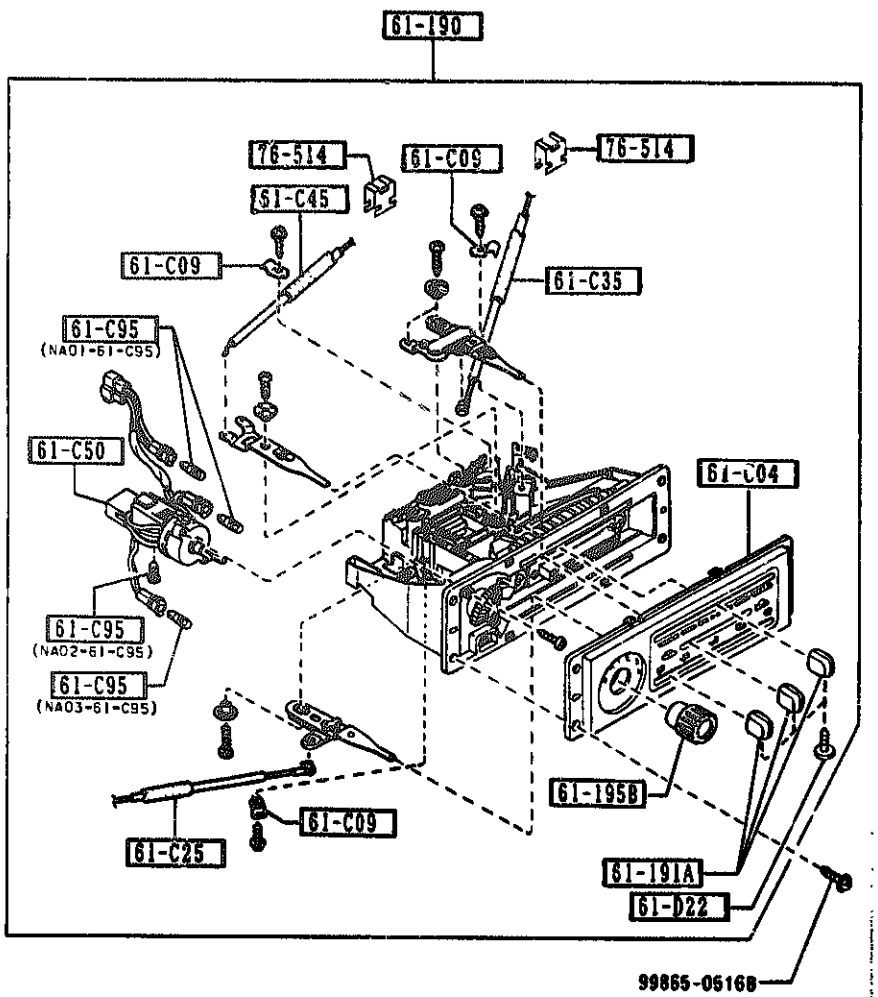

PART NO.	QTY	MODEL/RESTRICTION	MODEL/RESTRICTION	MODEL/RESTRICTION	FROM-TO
61-C04		PANEL,PLATE-MODE CONTROL			
NA01-61-C04	1				
61-C09		CLIP,HEATER CONYROL			
H260-61-C09	1				
61-C25		WIRE,TEMP. CONTROL			
NA01-61-C25	1				
61-C35		WIRE,MODE CONTROL			
NA01-61-C35	1				
61-C45		WIRE,RECYCLE & FRESH			
NA01-61-C45	1				
61-C50		SWITCH,FAN-HEATER CONTROL			
NA01-61-C50	1				
61-C95		BULB,MODE CONTROL			
NA01-61-C95	2				
NA02-61-C95	1				
NA03-61-C95	1				
61-D22		SCREW,RR HEATER UNIT			
NA01-61-D22	3				
61-190		CONTROL,HEATER			
NA01-61-190A	1				
61-191A		KNOB NO.1			
NA01-61-191	3				
61-195B		KNOB,FAN SWITCH			
NA01-61-195	1				
76-514		CLIP			
8001-76-526	2				

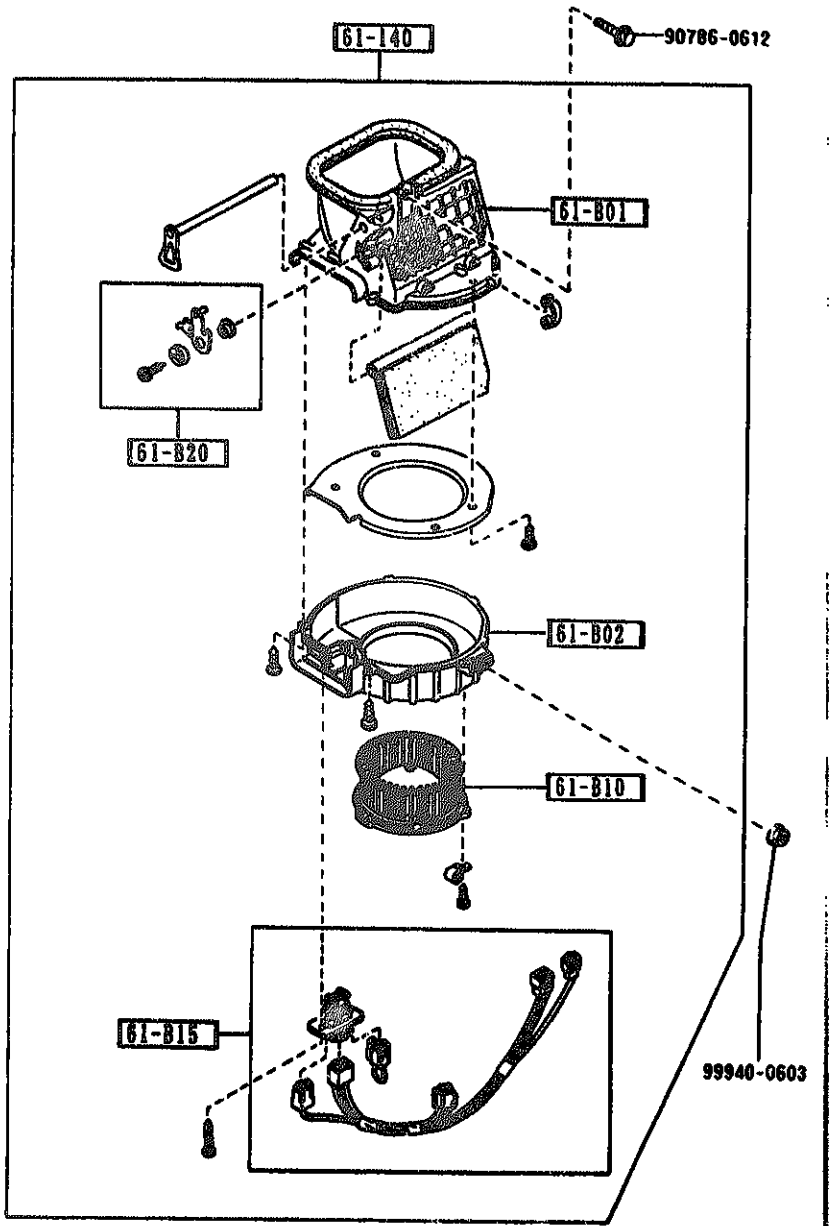

PART NO.	QTY	MODEL/RESTRICTION	MODEL/RESTRICTION	MODEL/RESTRICTION	FROM-TO
61-B01		CASE'A',BLOWER UNIT			
NA01-61-B01	1				
61-B02		CASE'B',BLOWER UNIT			
NA01-61-B02	1				
61-B10		MOTOR,FAN-BLOWER UNIT			
NA01-61-B10	1				
61-B15		RESISTOR,BLOWER UNIT			
NA01-61-B15	1				
61-B20		LINK,RECYCLE & FRESH			
NA01-61-B20	1				
61-140		BLOWER UNIT			
NA01-61-140A	1				

6130 AIR CONDITIONER

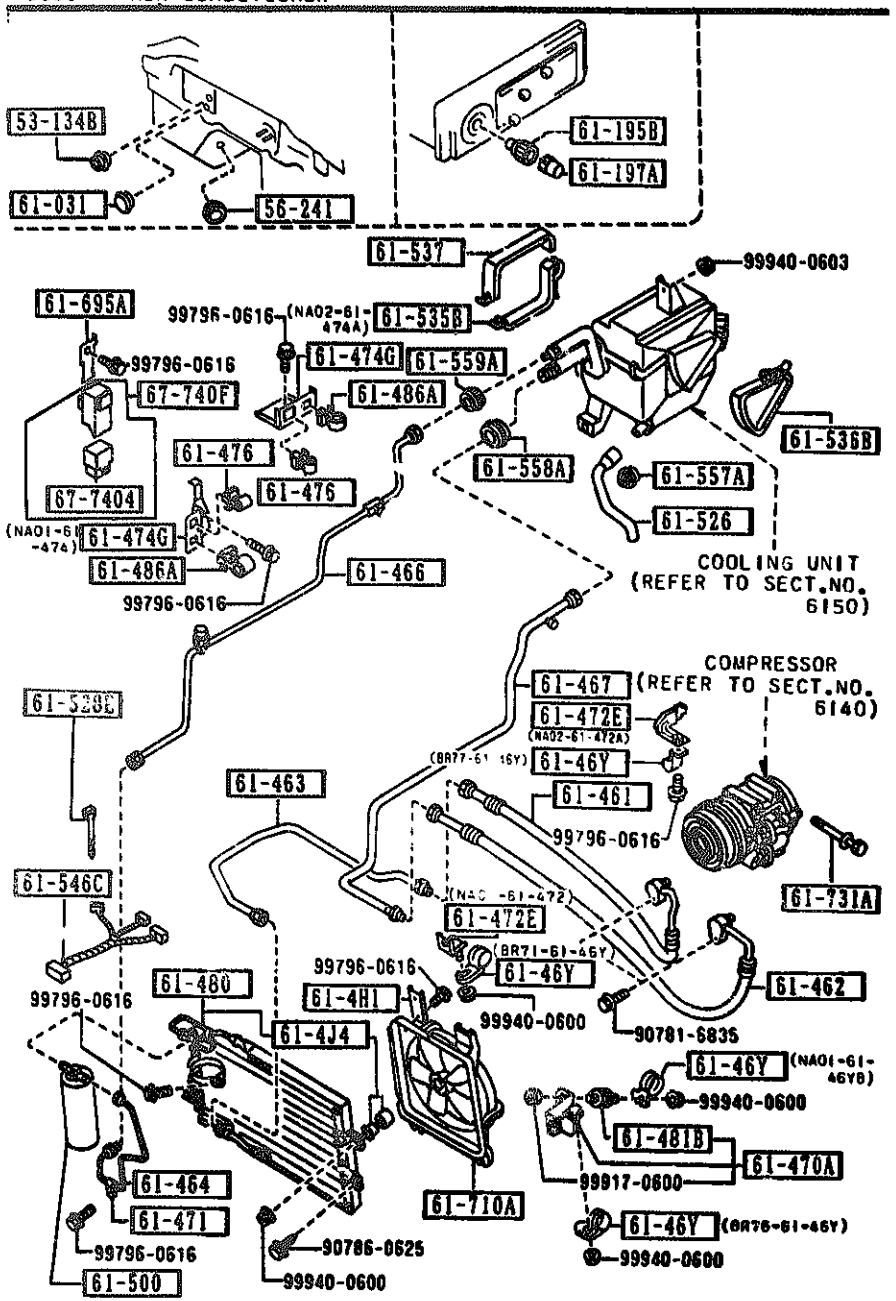

PART NO.	QTY	MODEL/RESTRICTION	MODEL/RESTRICTION	MODEL/RESTRICTION	FROM-TO
53-134B 0187-53-134	1	RUBBER,DUST SEAL			
56-241 0118-56-241	1	PLUG,DRAIN			
61-031 1708-61-031	1	PLUG,HOLE			
61-195B NA01-61-193	1	KNOB,FAN SWITCH			
61-197A NA01-61-197	1	KNOB,AIR CON.			
61-4H1 NA01-61-4H1	1	BRACKE.,HOSE (A)			
61-4J4 NA01-61-4J4	4	RUBBER,INS.-CONDR (A)			
61-46Y BR71-61-46Y	1	CLIP,PIPE (A)			
BR76-61-46Y	1	(A)			
BR77-61-46Y	1	(A)			
NA01-61-46YA AN(NA01-61-46YB)	1	(A)			-0116
NA01-61-46YB	1	(A)			0116-
61-461 NA01-61-461B	1	HOSE,FLEXIBLE-HIGH (A)			
61-462 NA01-61-462C	1	HOSE,FLEXIBLE-LOW (A)			

0116 NA35NH-134600

6130 AIR CONDITIONER

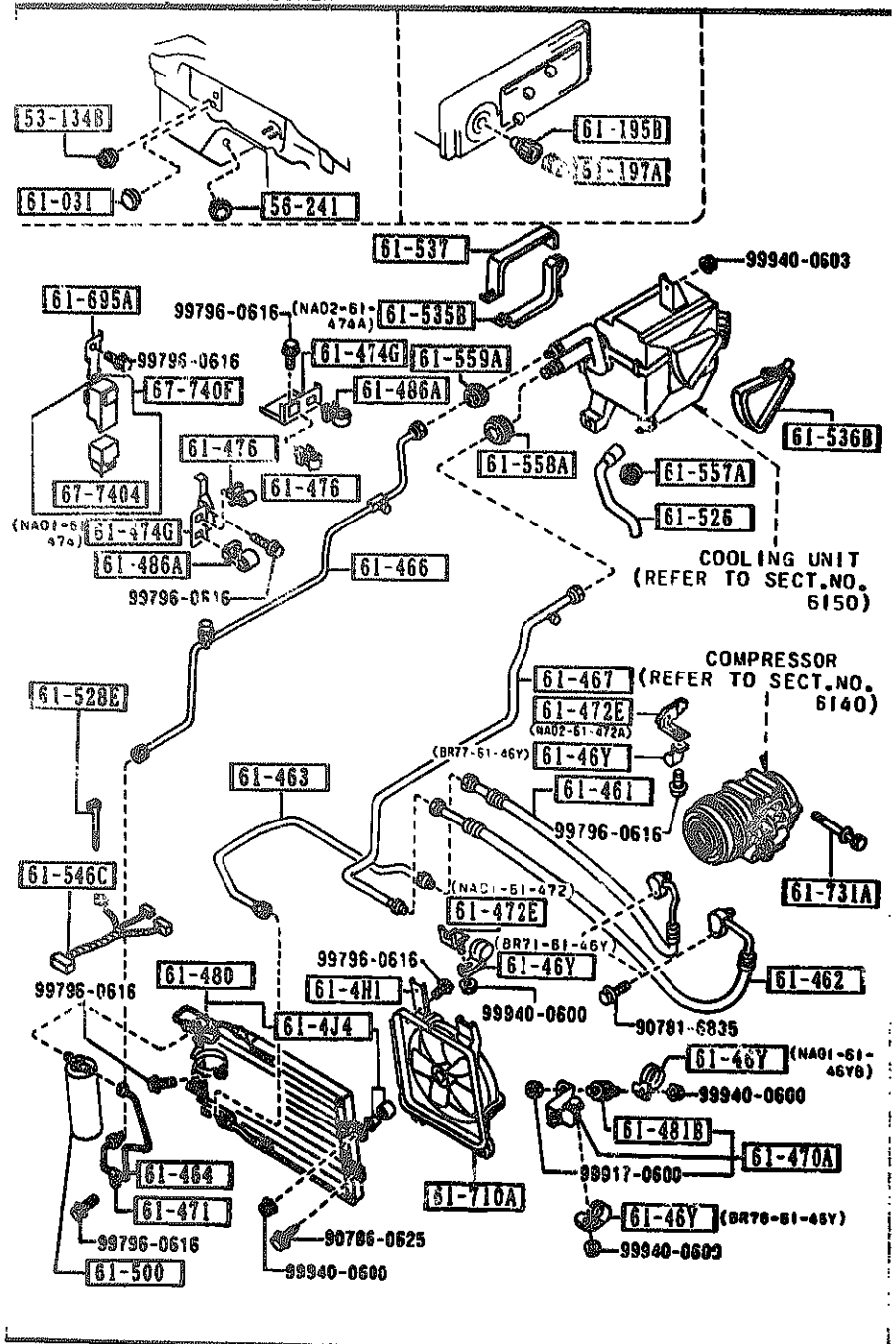

AUNA01

PART NO.	QTY	MODEL/RESTRICTION	MODEL/RESTRICTION	MODEL/RESTRICTION	FROM TO
61-463		PIPE NO.1,COOLER			
NA02-61-466B AN(NA02-61-466C)	1	(A)			-0116
NA02-61-466C	1	(A)			0116-
61-464		PIPE NO.2,COOLER			
NA01-61-466	1	(A)			
61-466		PIPE NO.4,COOLER			
NA01-61-467A	1	(A)			-0529
NA01-61-467B C (NA01-61-467C)	1	(A)			0529-0615
NA01-61-467C	1	(A)			0615-
61-467		PIPE NO.5,COOLER			
NA01-61-468A	1	(A)			
61-470A		BRACKET,HOSE			
NA02-61-470A AN(NA02-61-470B)	1				-0116
NA02-61-470B	1	(A)			0116-
61-471		CLIP,PIPE			
BF67-61-471	1	(A)			
61-472E		BRACKET,CLAMP			
NA01-61-472	1	(A)			
NA02-61-472 A (NA02-61-472A)	1	(A)			-9731
NA02-61-472A	1	(A)			9731-
61-474G		BRACKET,PIPE			
NA01-61-474	1	(A)			
NA02-61-474A	1	(A)			

9731 NA35##-116114
0116 NA35##-134600
0529 NA35##-154173
0615 NA35##-157507

CAT. AUNA01-07

1992-02

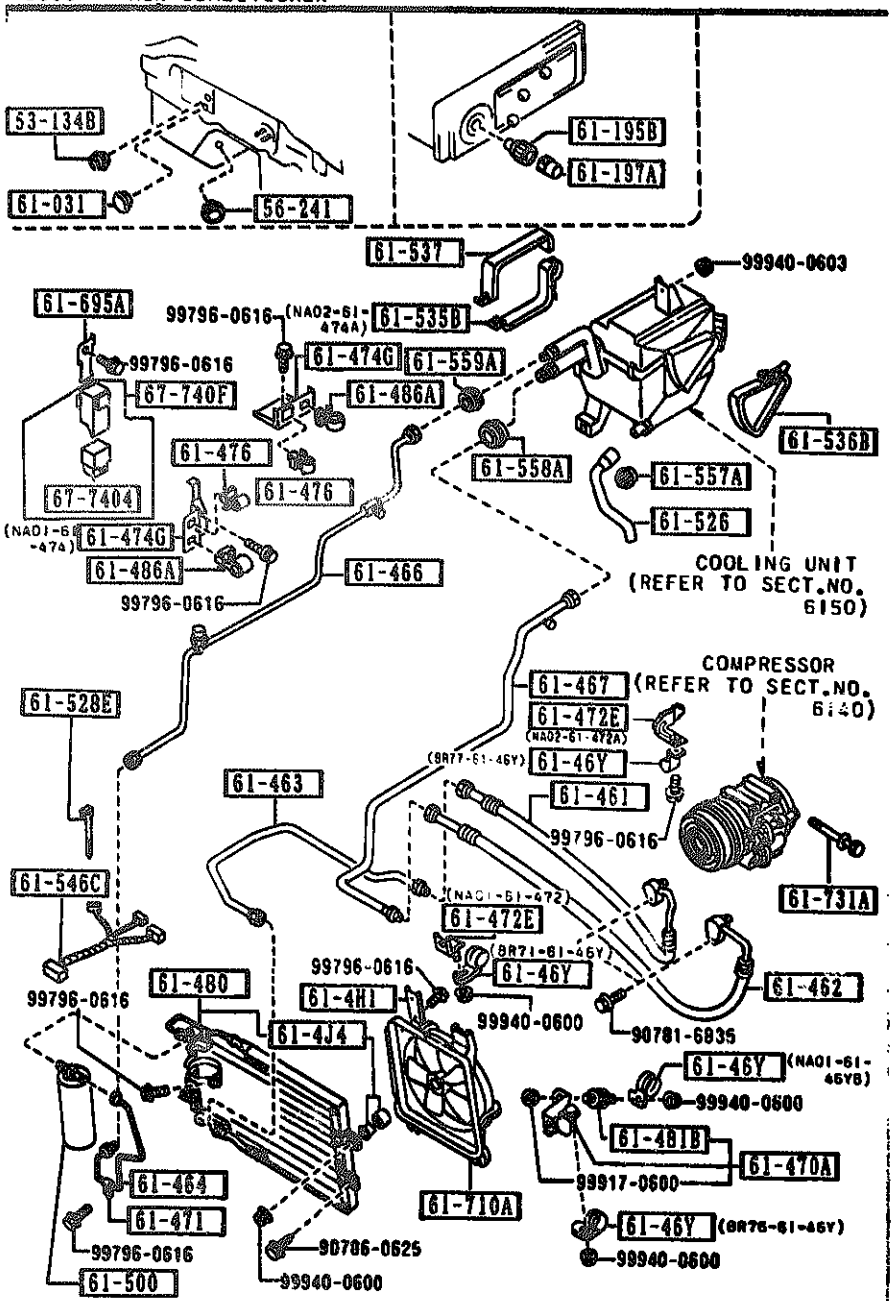

AUNA01

PART NO.	QTY	MODEL/RESTRICTION	MODEL/RESTRICTION	MODEL/RESTRICTION	FROM-TO
61-476		CLIP			
NA02-61-476	2	(A)			
61-480		CONDENSER			
NA01-61-480	1	(A)			
61-481B		RUBBER,INSULATOR			
NA01-61-487	1				
61-486A		CLIP			
UB39-61-486A	2				
61-500		TANK,LIQUID			
NA01-61-500	1	(A)			
61-526		HOSE,DRAIN			
NA01-61-526	1	(A)			
61-528E		BAND			
NA01-61-435	2	(G)			
61-535B		PLATE NO.1,SEAL			
NA01-61-52YA	1	(A)			
61-536B		PLATE NO.2,SEAL			
NA01-61-52Z	1	(A)			
61-537		PLATE NO.3,SEAL			
NA01-61-529	1	(A)			
61-546C		HARNESS,WIRE			
NA01-61-546B	1	(A)			
61-557A		GROMMET			
FB04-61-557	1	(A)			

6130 AIR CONDITIONER

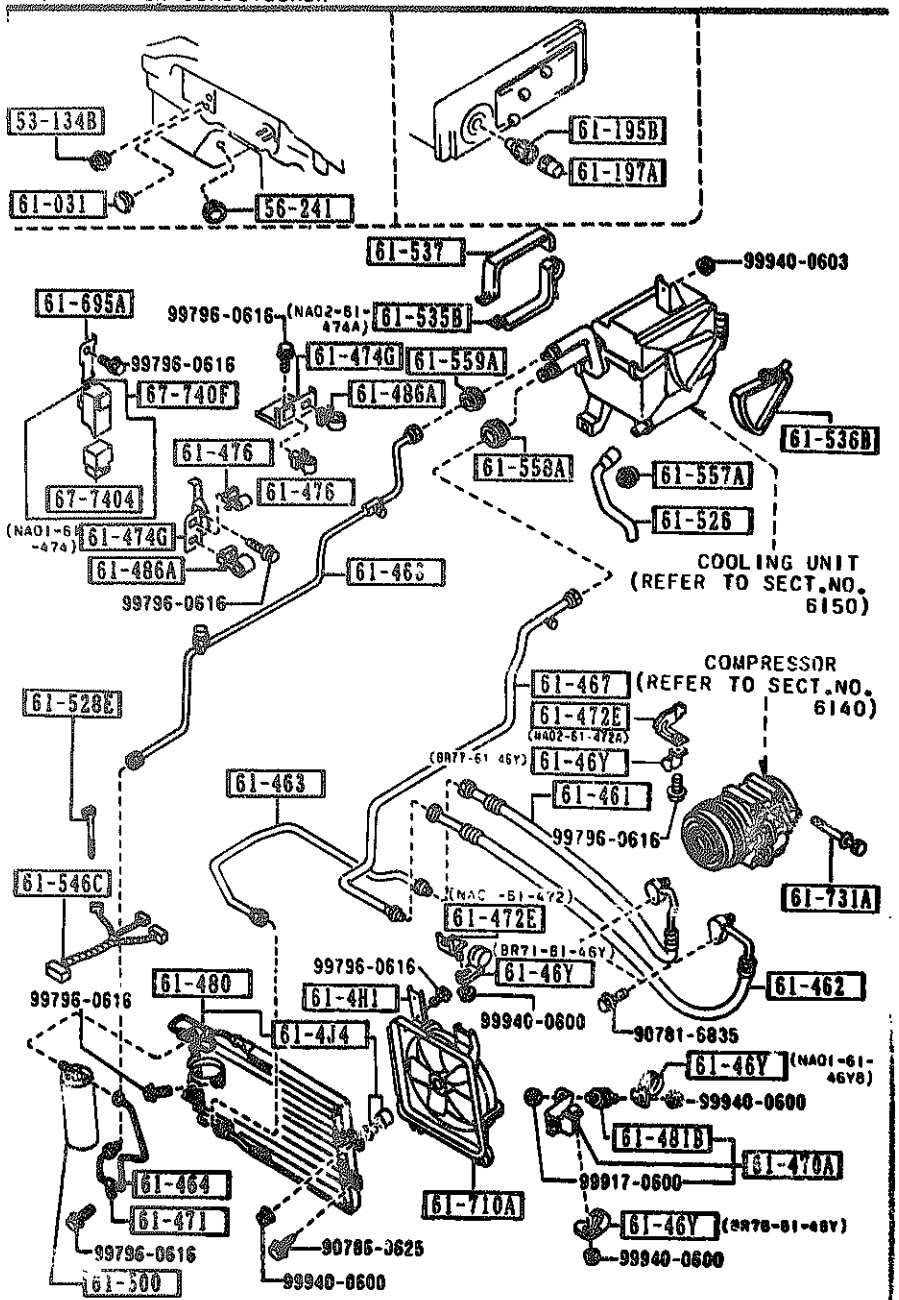

PART NO.	QTY	MODEL/RESTRICTION	MODEL/RESTRICTION	MODEL/RESTRICTION	FROM-TO
61-558A		GROMMET			
BF67-61-55[illegible]	1	(A)			
61-559A		GROMMET			
BF67-61-559	1	(A)			
61-695A		BRACKET,RELAY			
NA01-61-695	1	(A)			
61-710A		FAN,CONDENSER			
NAC1-61-710	1	(A)			
61-731A		BOLT,AIR CON.			
8111-61-731	4				
67-740F		RELAY,COOLING FAN			
8462-67-740	1	20A TR			
67-7404		RELAY,TRANSFER			
8458-67-740	1	20A TR			

6135 O RING SET,PIPING

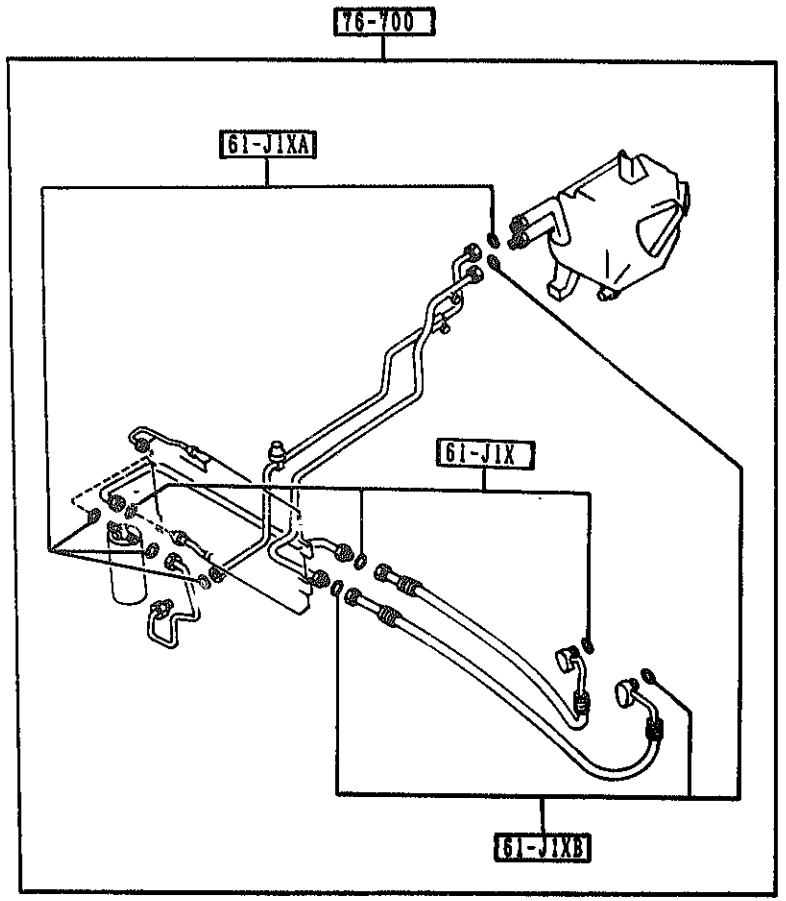

PART NO.	QTY	MODEL/RESTRICTION	MODEL/RESTRICTION	MODEL/RESTRICTION	FROM-TO
61-J1X GJY1-61-J1X	1	RING,'O'-NO.1 (A)			
61-J1XA GJY2-61-J1X	1	RING,'O'-NO.2 (A)			
61-J1XB GJY3-61-J1X	1	RING,'O'-NO.3 (A)			
76-700 NA01-76-700	1	RING SET,'O'-AIR CON (A)			

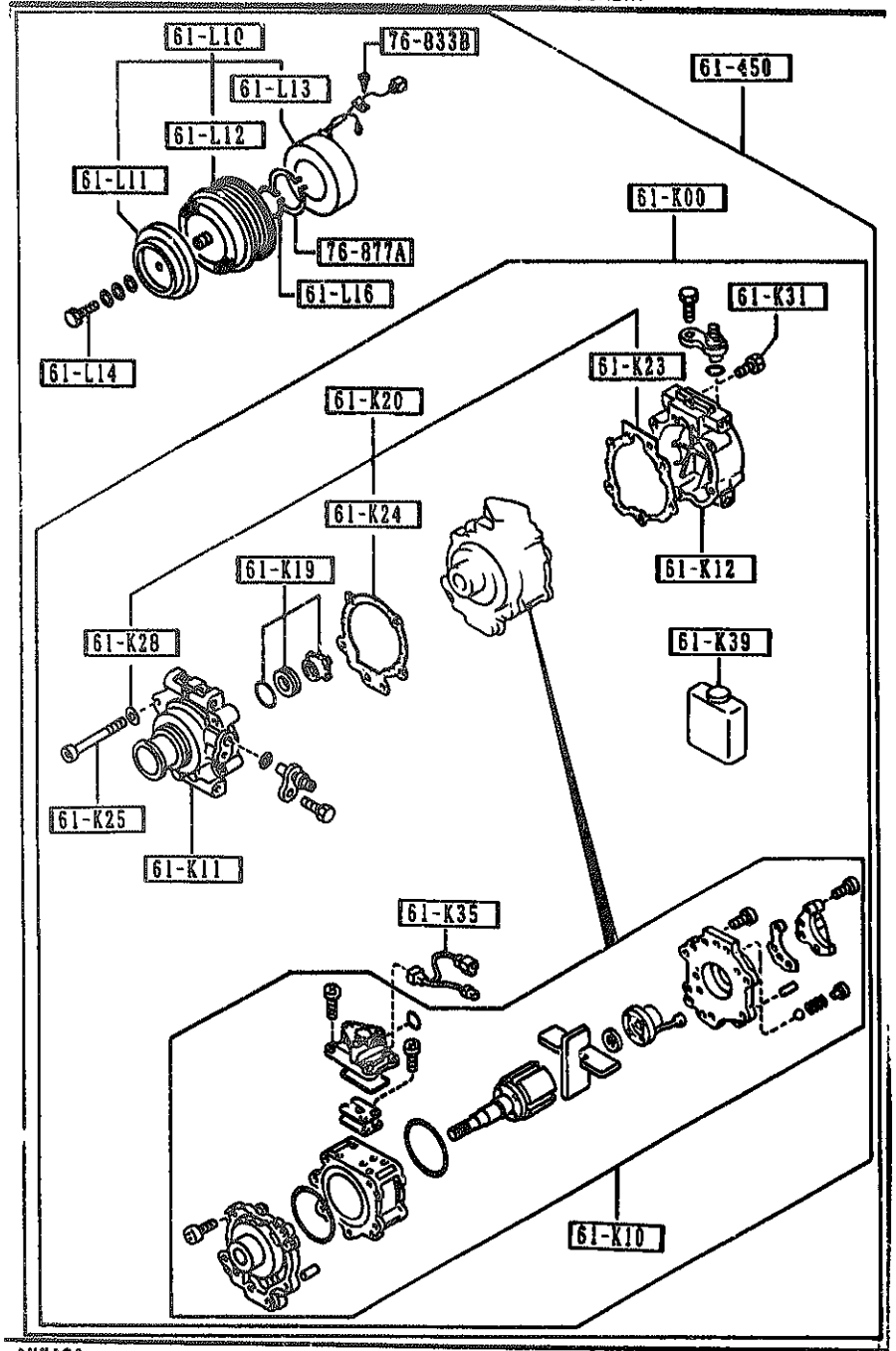

AUMA01

6140 -1 COMPRESSOR COMPONENTS (AIR CONDITIONER)

PART NO.	QTY	MODEL/RESTRICTION	MODEL/RESTRICTION	MODEL/RESTRICTION	FROM-TO
61-K00		COMPRESSOR,AIR CON.			
NA02-61-K00	1	(A)			
61-K10		SHAFT,CYL -COMPRESSOR			
NA02-61-K10	1	(A)			
61-K11		HEAD,CYL.-COMPRESSOR			
NA02-61-K11	1	(A)			
61-K12		HEAD,CYL.-COMPRESSOR			
NA02-61-K12	1	(A)			
61-K19		SEAL,SHAFT-COMPR.			
F065-61-K19	1				
61-K20		GASKET KIT,COMPRESSOR			
NA02-61-K2X	1	(A)			
61-K23		PLUG,COMPRESSOR			
NA02-61-K23	1	(A)			
61-K24		GASKET,COMPRESSOR			
NA02-61-K24	1	(A)			
61-K25		BOLT,COMPRESSOR-AIR CON.			
F065-61-K25	5				
61-K28		WASHER,COMPRESSOR			
NA02-61-K28	5	(A)			
61-K31		BOLT,COMPRESSOR			
F065-61-K31	2				
61-K35		HARNESS,COMPRESSOR			
NA02-61-K35	1	(A)			

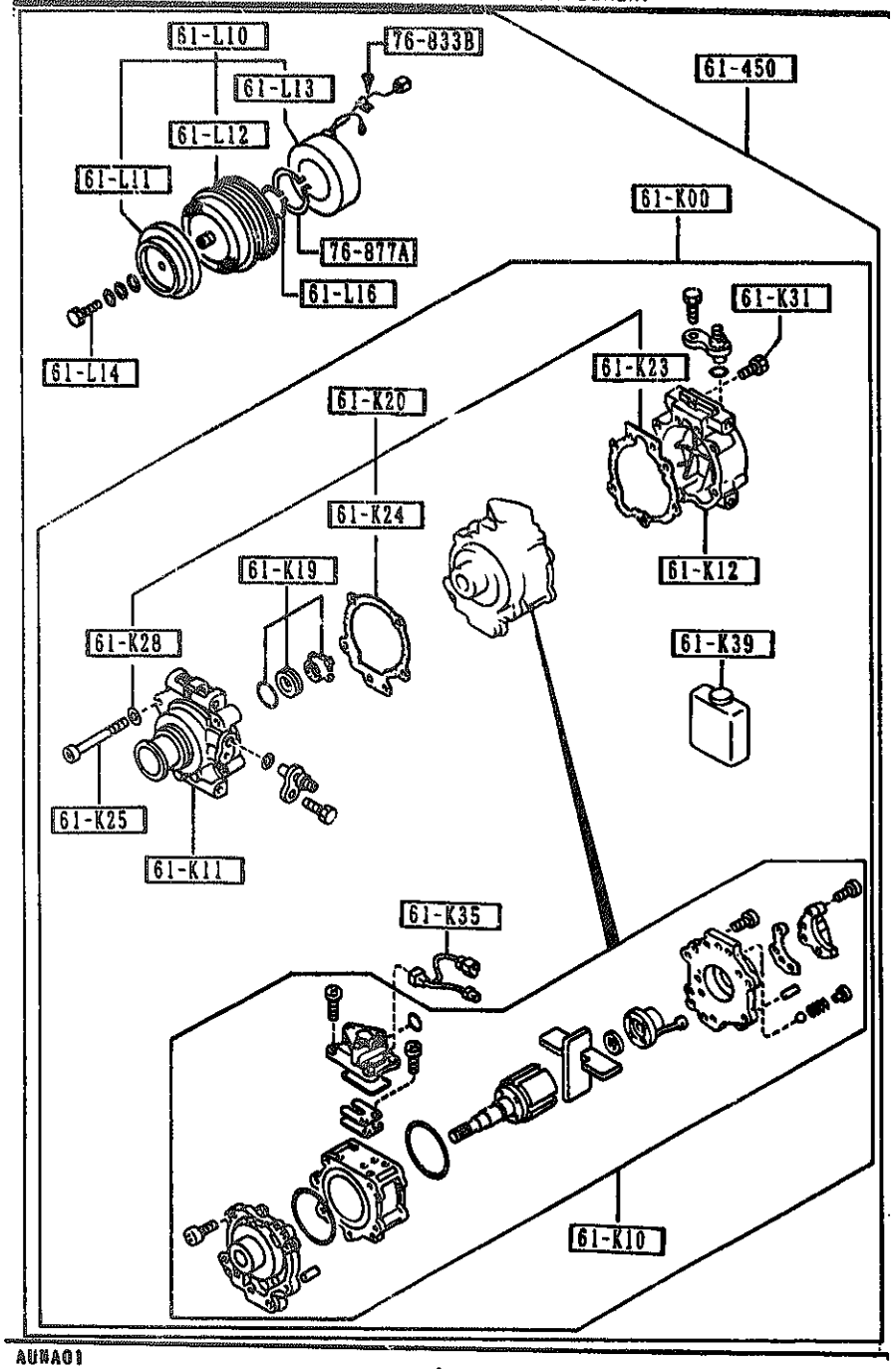

AUNA01

PART NO.	QTY	MODEL/RESTRICTION	MODEL/RESTRICTION	MODEL/RESTRICTION	FROM-TO
61-K39		OIL,COMPRESSOR			
NA02-61-K39	1	(A)			
61-L10		CLUTCH,MAGNET			
NA02-61-L10	1	(A)			
61-L11		ARMATURE,MAGNET CLUTCH			
F065-61-L11	1				
61-L12		PULLEY,MAGNET CLUTCH			
NA02-61-L12	1	(A)			
61-L13		COIL,FIELD-MAGNET CLUTCH			
F065-61-L13	1				
61-L14		BOLT,MAGNET CLUTCH			
F065-61-L14	1				
61-L16		RING,SNAP-MAGNET CLUTCH			
F065-61-L16	1				
61-450		COMPRESSOR			
NA02-61-450A	1	(A)			
76-833B		WASHER			
B001-76-734	1				
76-877A		RING,SNAP			
B001-76-725	1				

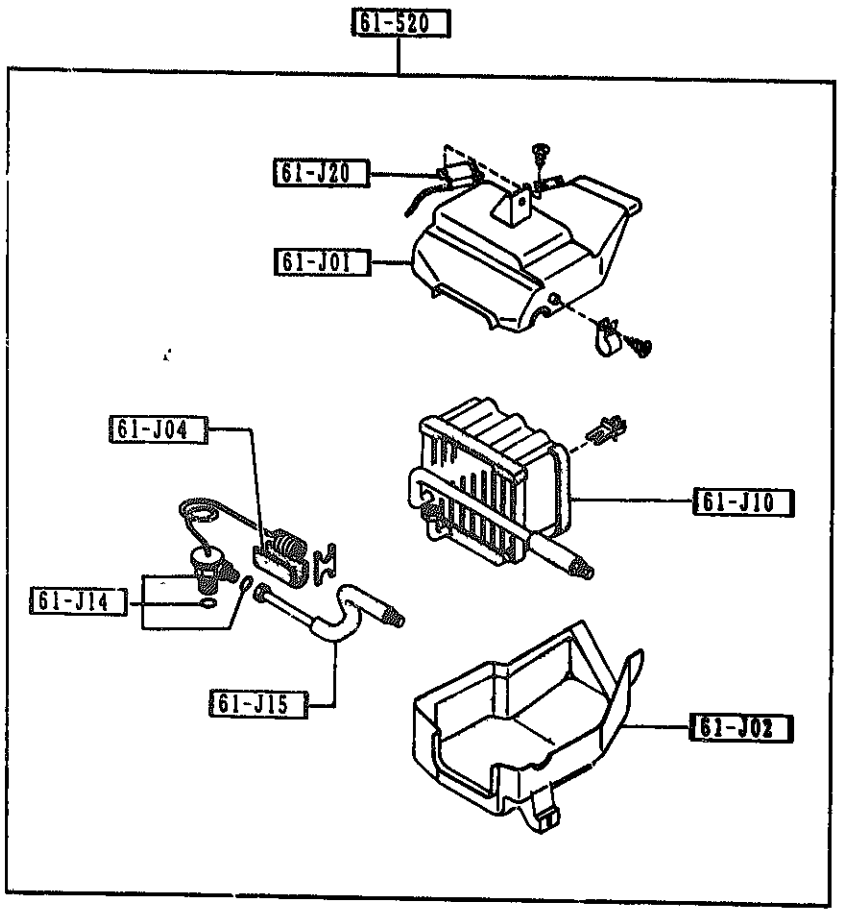

PART NO.	QTY	MODEL/RESTRICTION	MODEL/RESTRICTION	MODEL/RESTRICTION	FROM-TO
61-J01		CASE'A',COOLING UNIT			
NA01-61-J01	1	(A)			
61-J02		CASE'B',COOLING UNIT			
NA01-61-J02	1	(A)			
61-J04		SEAL,COOLING UNIT			
NA01-61-J04	1	(A)			
61-J10		EVAPORATOR			
NA01-61-J10	1	(A)			
61-J14		VALVE,EXPANSION			
NA01-61-J14	1	(A)			
61-J15		PIPE,COOLING UNIT			
NA01-61-J15	1	(A)			
61-J20		THERMOSTAT,COOLING UNIT			
NA01-61-J20	1	(A)			
61-520		UNIT,COOLING			
NA01-61-520B	1	(A)			

SECTION NAME INDEX (BODY)

LO.NO	SEC.NO	SECTION NAME
2-C05	0900	KEY SETS
2-E05	5000	FRONT BUMPER
2-H05	5010	REAR BUMPER
2-J05	5030	WINDOW MOULDING & COWL GRILLES
2-L05	5100	HEAD LAMPS
2-M05	5103	HEAD LAMP RETRACTORS
2-D06	5105	FRONT COMBINATION LAMPS
2-F06	5110	REAR COMBINATION LAMPS
2-I06	5120	LICENSE LAMPS
2-J06	5180	REAR FINISHER
2-L06	5230	BONNET
2-N06	5260	TRUNK LID
2-D07	5310	BODY PANELS (FRONT)
2-E07	5320	BODY PANELS (FENDER & WHEEL APRON)
2-H07	5330	BODY PANELS (DASH & COWL PANEL)
2-I07	5340	BODY PANELS (SIDE)
2-C08	5370	BODY PANELS (FLOOR)
2-F08	5380	FLOOR ATTACHMENTS (HOLE COVERS)
2-G08	5390	FLOOR ATTACHMENTS
2-C09	5500	DASHBOARD EQUIPMENTS
2-E09	5520	METER HOOD
2-F09	5530	SPEEDOMETER CABLE
2-G09	5540	METER COMPONENTS
2-I09	5560	DASHBOARD & RELATED PARTS
2-L09	5570	CONSOLE
2-C10	5580	VENTILATOR
2-D10	5700	SEATS
2-K10	5790	SEAT BELTS
2-L10	5800	FRONT DOORS
2-C11	5830	FRONT DOOR MECHANISMS
2-F11	5840	FRONT DOOR TRIMS & RELATED PARTS
2-C12	6100	HEATER
2-D12	6110	HEATER UNIT COMPONENTS
2-E12	6115	HEATER CONTROLS COMPONENTS
2-F12	6120	HEATER BLOWER COMPONENTS
2-G12	6130	AIR CONDITIONER
2-K12	6135	O RING SET,PIPING
2-L12	6140	COMPRESSOR COMPONENTS (AIR CONDITIONER)
2-N12	6150	COOLING UNIT (AIR CONDITIONER)
2-C13	6300	WINDOW GLASSES
2-D13	6330	SUNROOF
2-M13	6600	SWITCHES & RELAYS (ENGINE)
2-D14	6610	DASHBOARD SWITCHES
2-E14	6611	COMBINATION SWITCH
2-F14	6630	RELAYS & UNIT (BODY)
2-G14	6635	DOOR SWITCH & HORNS
2-H14	6640	AUTO CRUISE CONTROL SYSTEM
2-I14	6680	AUDIO SYSTEMS (RADIO & TAPE DECK)
2-K14	6682	AUDIO SYSTEMS (ANTENNA & SPEAKER)
2-L14	6700	WIRING HARNESSES(FRONT & REAR)
2-N14	6701	WIRING HARNESSES(ENGINE & T/MISSION)
2-D15	6702	WIRING HARNESSES(DASHBOARD)
2-E15	6703	WIRING HARNESSES(DOOR,FLOOR/CEILING)
2-F15	6704	WIRING HARNESS CLAMPS
2-I15	6720	WINDSHIELD WASHER
2-K15	6730	WINDSHIELD WIPERS
2-M15	6740	WIPER MOTOR COMPONENTS(FRONT)
2-N15	6820	FRONT HEADER TRIM & PILLAR TRIMS
2-C16	6840	TRIMS & SCUFF PLATES
2-E16	6860	FLOOR MATS & PADS
2-G16	6870	SERVICE TOOLS
2-H16	6900	VISORS,ASSIST HANDLES & MIRRORS
2-J16	6930	CAUTION PLATES & LABELS
2-L16	7250	QUARTER WINDOW & TRIMS
3-C03	7900	ACCESSORIES



CATLOG-NO= AUNA01-07

DATE. 1992-02

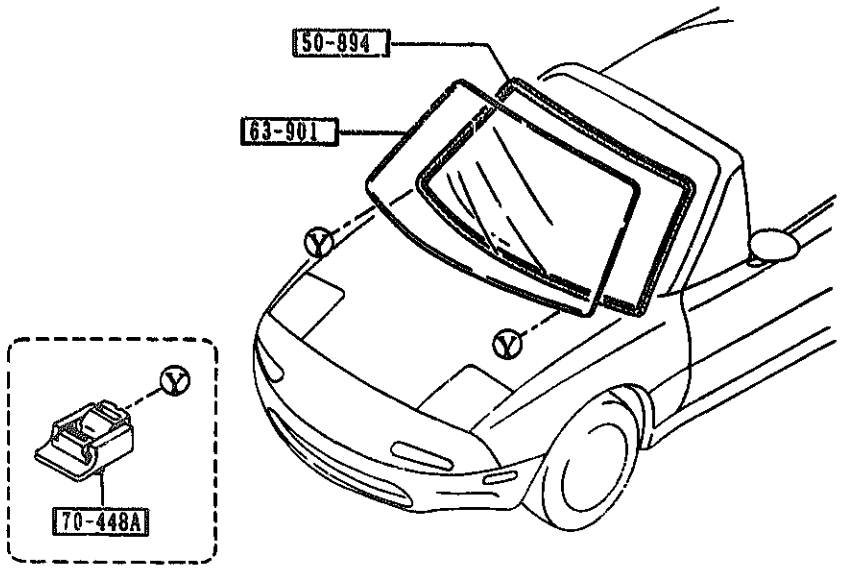

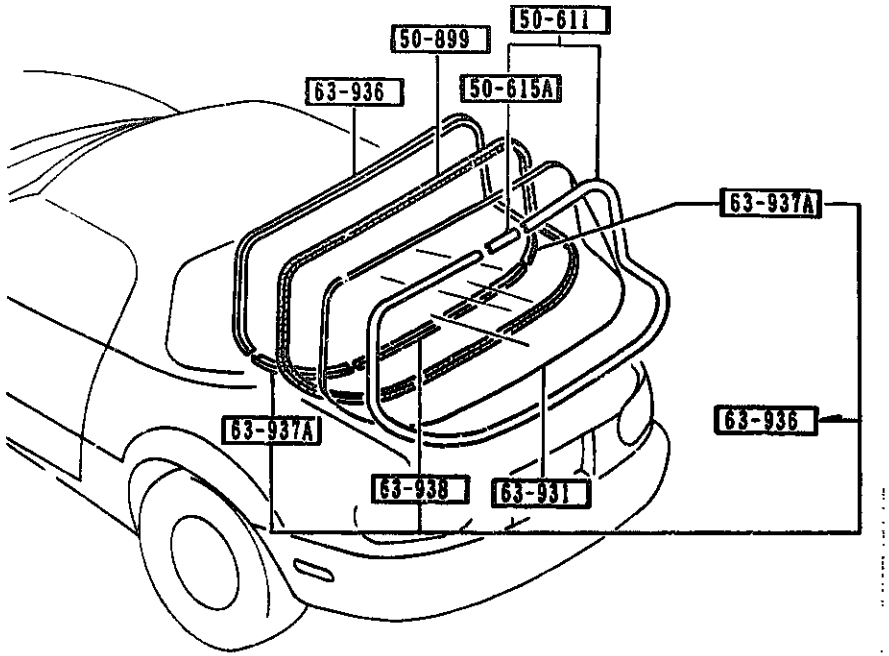

PART NO.	QTY	MODEL/RESTRICTION	MODEL/RESTRICTION	MODEL/RESTRICTION	FROM-TO
50-611		MOULD,RR.WINDOW			
NAY1-63-930	1	OPTION, (W/DETACHABLE TOP-B. COLOR,)			
50-615A		JOINT,BACK WIND MOULD			
NA01-63-934	1	OPTION, (W/DETACHABLE TOP-B. COLOR,)			
50-894		DUM,FRONT-WIND.			
NA01-50-894	1				
50-899		DUM,REAR-WIND.			
NA01-63-895	1	OPTION, (W/DETACHABLE TOP-B. COLOR,)			
63-901		GLASS,WINDSHIELD			
NA01-63-901	1				
63-931		GLASS,BACK WINDOW			
NA01-63-931C	1	OPTION, (W/DETACHABLE TOP-B. COLOR,)			
63-936		PROTR,BACK WINDOW-UPPER			
NA01-63-936A	1	OPTION, (W/DETACHABLE TOP-B. COLOR,)			-9916
NA01-63-936A	2	OPTION, (W/DETACHABLE TOP-B. COLOR,)			9916-
63-937A		PROTR,BACK WINDOW-SIDE			
NA01-63-937	2	OPTION, (W/DETACHABLE TOP-B. COLOR,)			-9916
63-938		PROTR,BACK WINDOW-LOWER			
NA01-63-938	1	OPTION, (W/DETACHABLE TOP-B. COLOR,)			-9916
70-448A		SPACER'B'			
GJ21-50-891	2				

9916 NA35##-121163

(W/O DETACHABLE TOP)

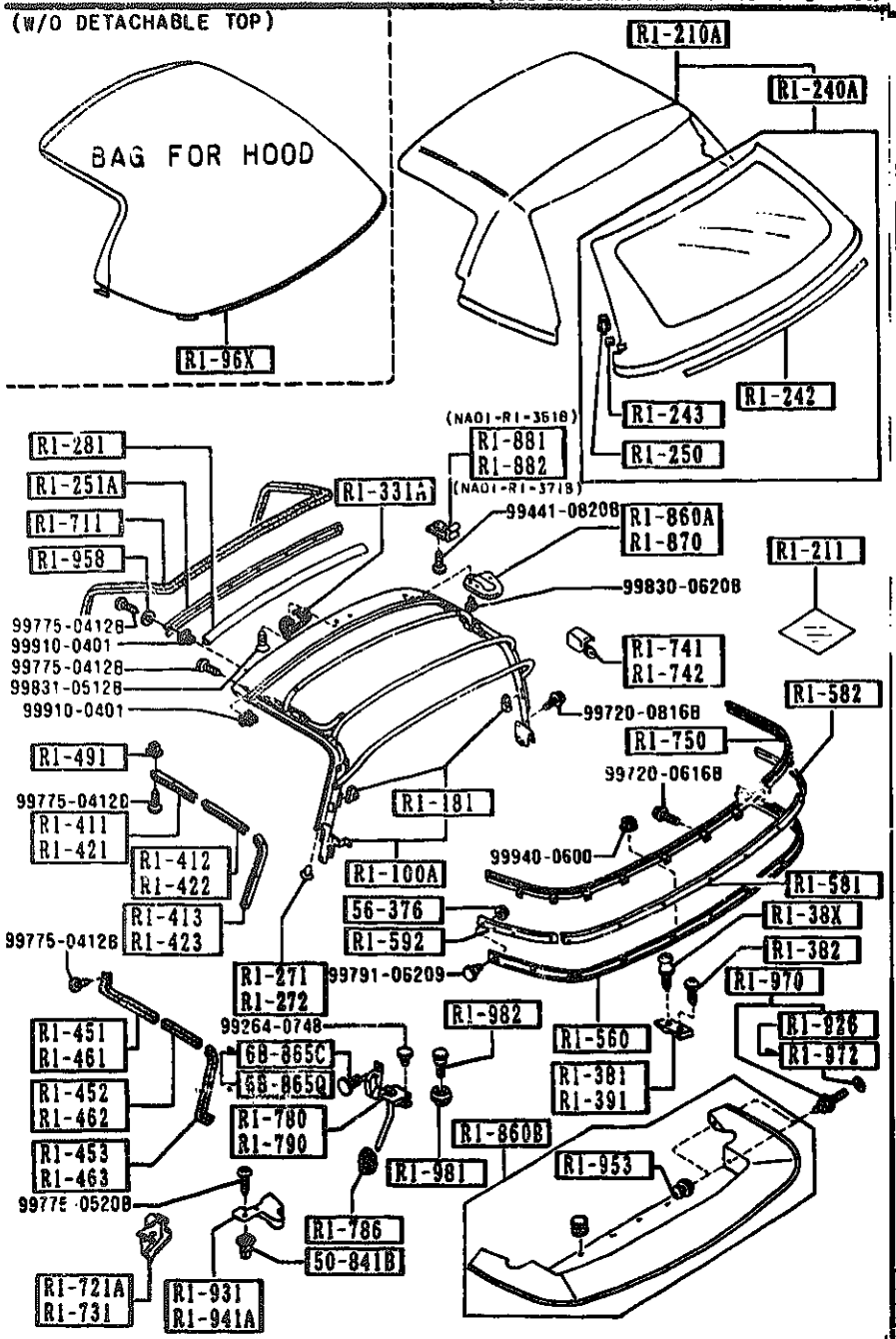

AURA01 (CONT'D)

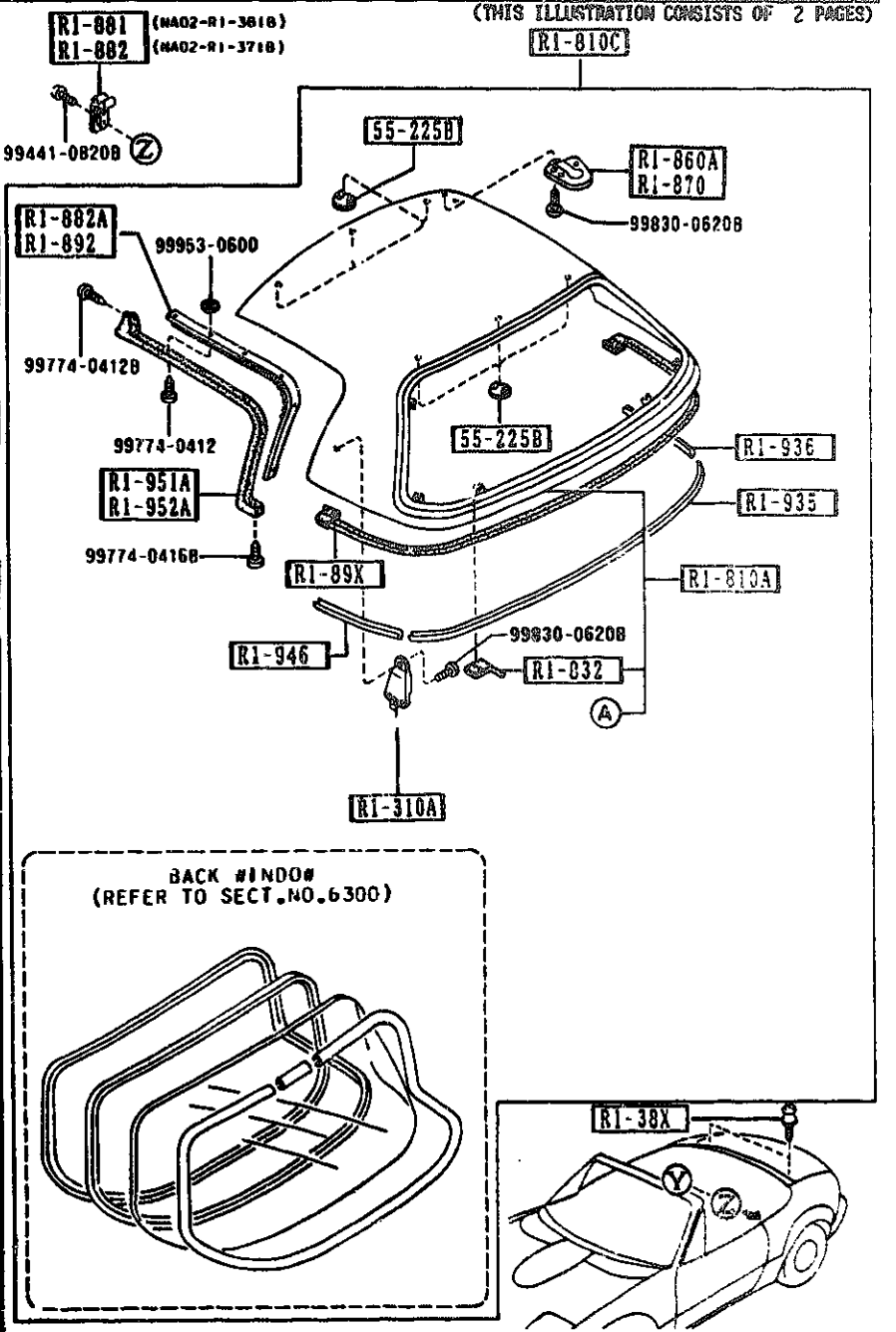

AURA01

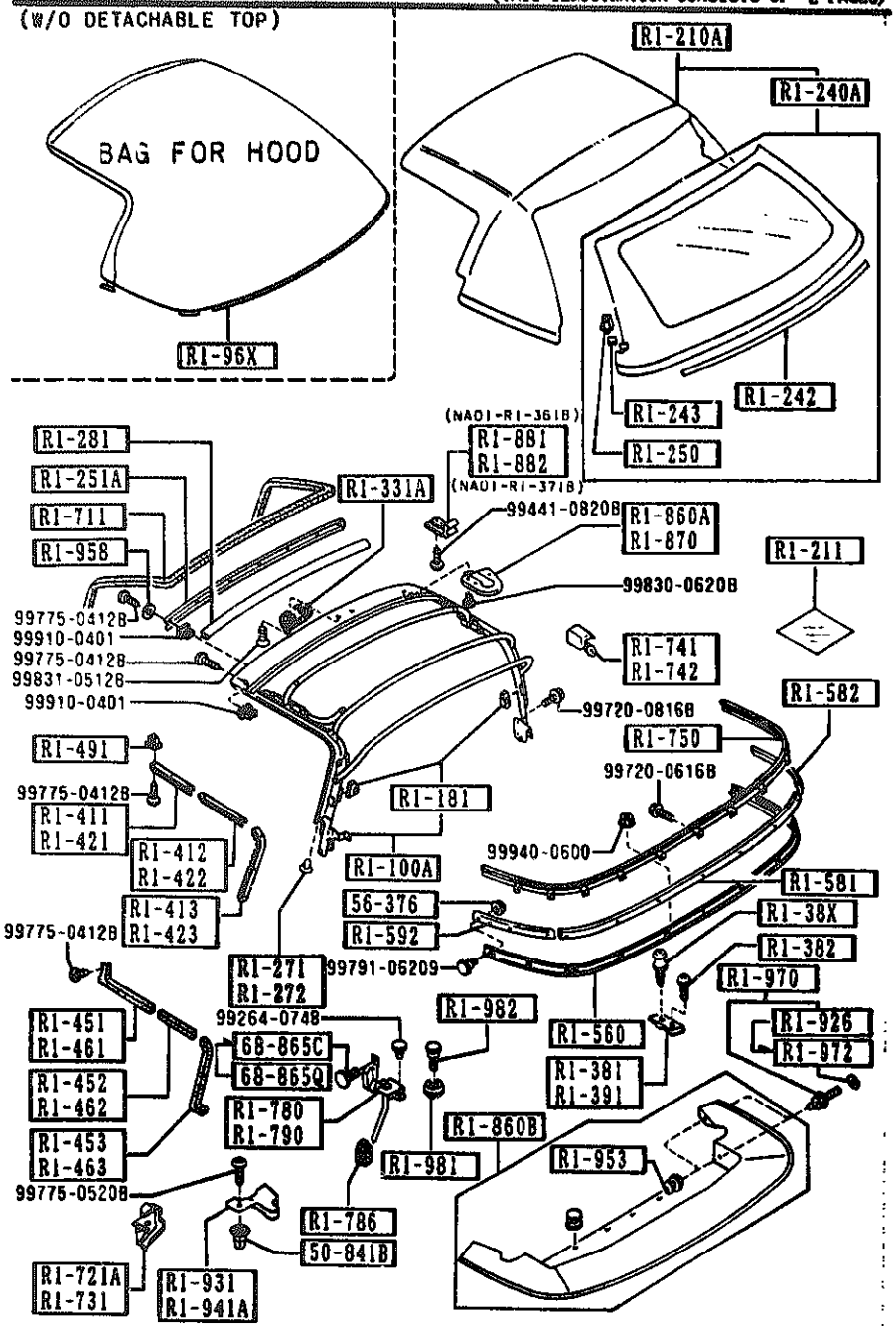

AUNA01 (CONT'D)

6330 -1 SUNROOF

PART NO.	QTY	MODEL/RESTRICTION	MODEL/RESTRICTION	MODEL/RESTRICTION	FROM-TO
R1-100A		LINK,SOFT TOP			
NA01-R1-100C AN(NA01-R1-100D)	1				-9701
NA01-R1-100D	1				9701-
R1-181		STOPPER,LINK-HOOD			
NA01-R1-181	2				9701-
R1-210A		FABRIC,TOP-SOFT TOP			
NA01-R1-210D A (NA01-R1-210E)	1				-9522
NA01-R1-210E A (NA01-R1-210F)	1				9522-9620
NA01-R1-210F AN(NA01-R1-210G)	1				9620-0201
NA01-R1-210G	1				0201-
R1-211		CLOTH,REPAIR-TOP			
NAY1-R1-211	1				
R1-240A		WINDOW,BACK-D. TOP			
*NAY1-R1-240C	1	BLACK			
R1-242		TAPE,SEAL-RAIN RAIL			
NAY1-R1-242	1				
R1-243		STOPPER,ZIPPER-BACK WINDOW			
NAY1-R1-243	2				
R1-250		HEAD,ZIPPER-BACK WINDOW			
NA01-R1-250 AN(NA01-R1-250A)	1				-0201
NA01-R1-250A	1				0201-
R1-251A		PLATE(FRT),SET-ROOF PANEL			
NA01-R1-291	1				
R1-271		CLIP(R),FORM PLATE			
NA01-R1-271	1				0601-
R1-272		CLIP(L),FORM PLATE			

9522 NA35**-104861
9620 NA35**-110236
9701 NA35**-111969
0201 NA35**-137180
0601 NA35**-154752

CAT. AUNA01-07 1992-02

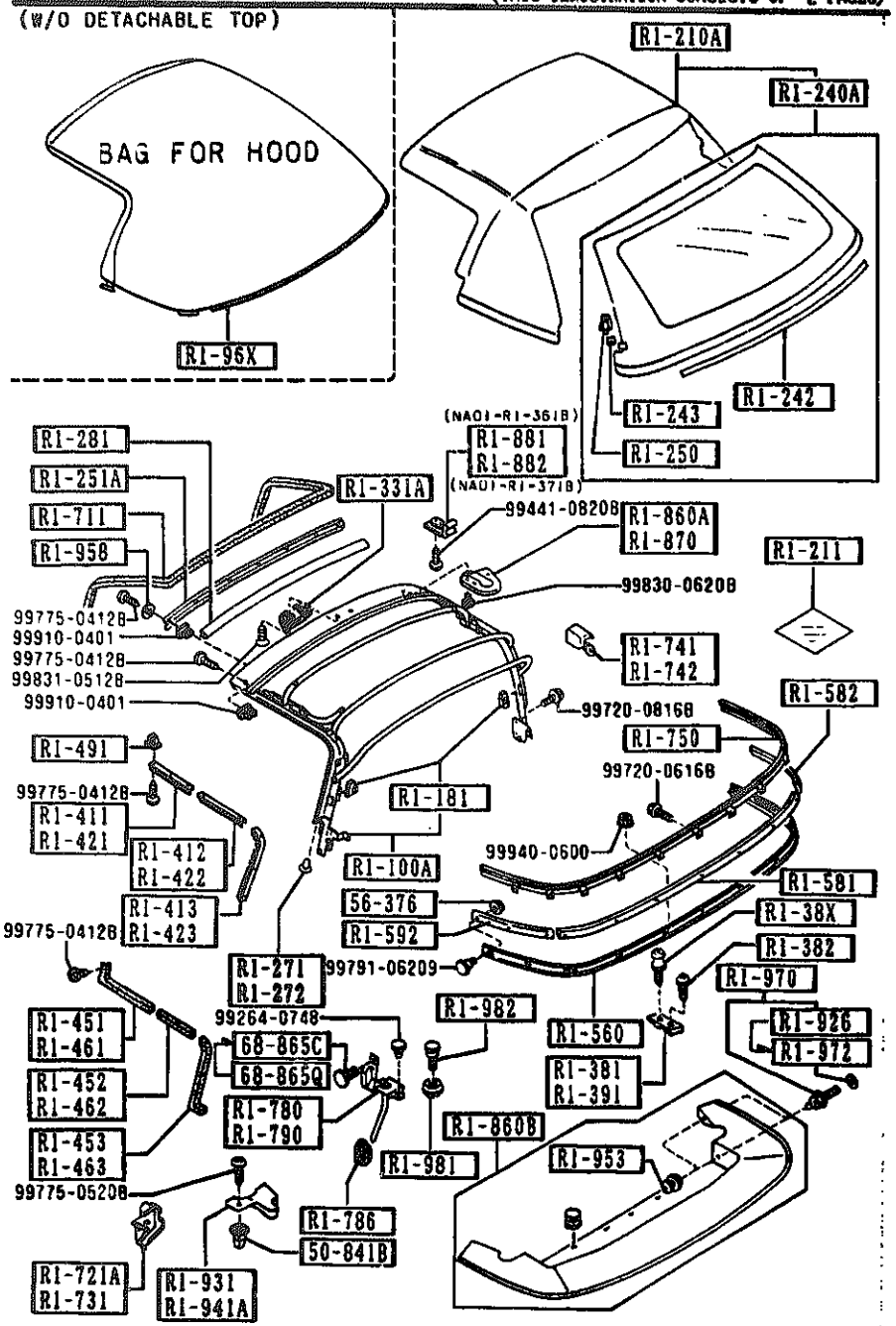

AUNA01 (CONT'D)

6330 -1 SUNROOF

PART NO.	QTY	MODEL/RESTRICTION	MODEL/RESTRICTION	MODEL/RESTRICTION	FROM-TO
R1-100A		LINK,SOFT TOP			
NA01-R1-100C AN(NA01-R1-100D)	1				-9701
NA01-R1-100D	1				9701-
R1-181		STOPPER,LINK-HOOD			
NA01-R1-181	2				9701-
R1-210A		FABRIC,TOP-SOFT TOP			
NA01-R1-210D A (NA01-R1-210E)	1				-9522
NA01-R1-210E A (NA01-R1-210F)	1				9522-9620
NA01-R1-210F AN(NA01-R1-210G)	1				9620-0201
NA01-R1-210G	1				0201-
R1-211		CLOTH,REPAIR-TOP			
NAY1-R1-211	1				
R1-240A		WINDOW,BACK-D. TOP			
*NAY1-R1-240C	1	BLACK			
R1-242		TAPE,SEAL-RAIN RAIL			
NAY1-R1-242	1				
R1-243		STOPPER,ZIPPER-BACK WINDOW			
NAY1-R1-243	2				
R1-250		HEAD,ZIPPER-BACK WINDOW			
NA01-R1-250 AN(NA01-R1-250A)	1				-0201
NA01-R1-250A	1				0201-
R1-251A		PLATE(FRT),SET-ROOF PANEL			
NA01-R1-291	1				
R1-271		CLIP(R),FORM PLATE			
NA01-R1-271	1				0601-
R1-272		CLIP(L),FORM PLATE			

9522 NA35##-104861
9620 NA35##-110236
9701 NA35##-111969
0201 NA35##-137180
0601 NA35##-154752

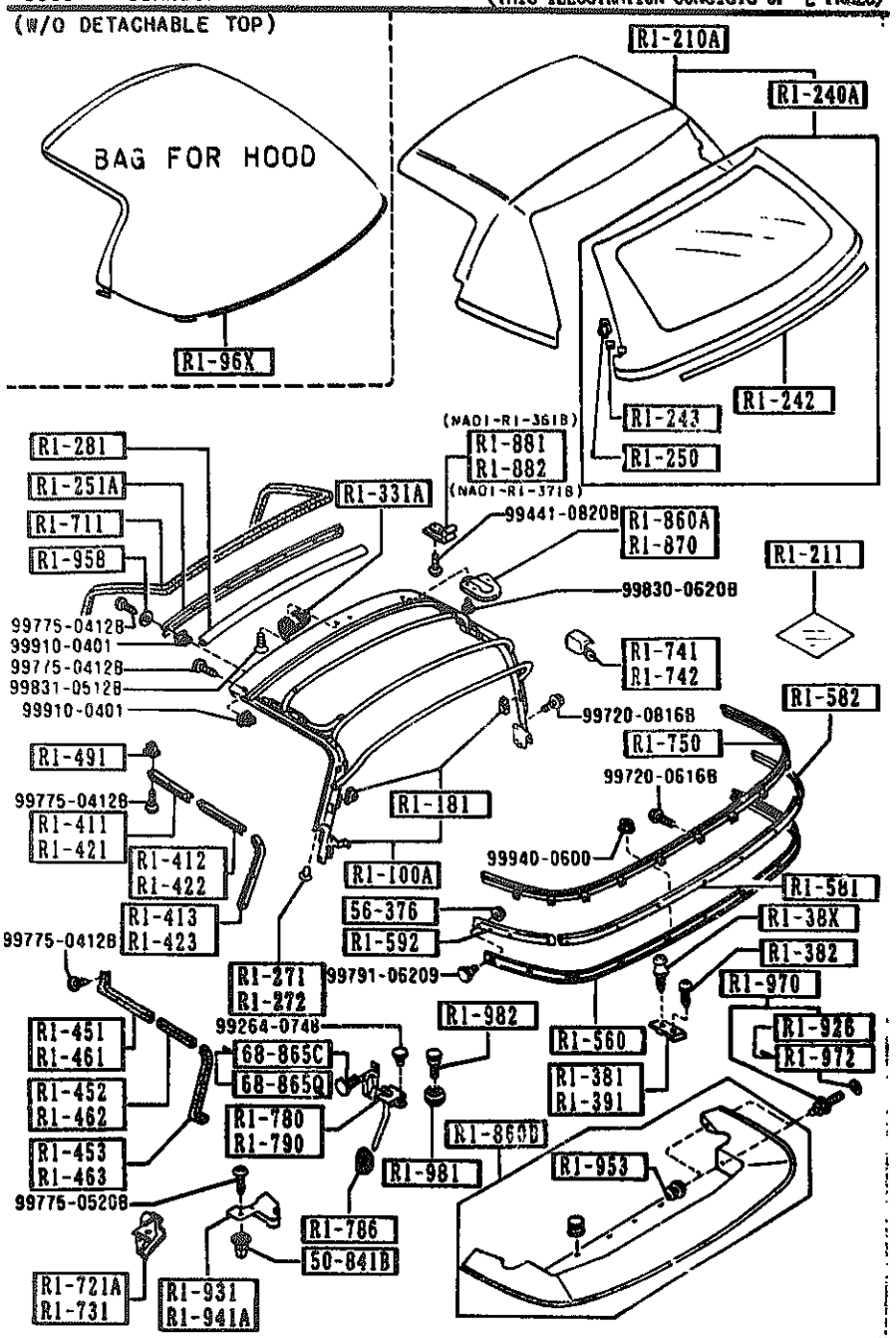

AUNA01 (CONT'D)

6330 -3 SUNROOF

PART NO.	QTY	MODEL/RESTRICTION	MODEL/RESTRICTION	MODEL/RESTRICTION	FROM-TO
R1-421		RETAINER'A'(L),WTHSTP			
NA01-R1-471	1				
R1-422		RETAINER'B'(L),WTHSTP			
NA01-R1-472	1				
R1-423		RETAINER'C'(L),WTHSTP			
NA01-R1-473	1				
R1-451		WTHSTP NO.1(R),LINK			
NA01-R1-4118	1				
R1-452		WTHSTP NO.2(R),LINK			
NA01-R1-4128	1				
R1-453		WTHSTP NO.3(R),LINK			
NA01-R1-4138	1				
R1-461		WTHSTP NO.1(L),LINK			
NA01-R1-4218	1				
R1-462		WTHSTP NO.2(L),LINK			
NA01-R1-4228	1				
R1-463		WTHSTP NO.3(L),LINK			
NA01-R1-4238	1				
R1-491		GROMMET,SCREW-RETAINER			
NA01-R1-491	26				
R1-560		RAIL,RAIN-SOFT TOP REAR			
NA01-R1-560C	1				
R1-581		PLATE(C),SET-TOP FABRIC			
NA01-R1-5818	1				
R1-582		PLATE(R),SET-TOP FABRIC			
NA01-R1-582A	1				
R1-592		PLATE(L),SET-TOP FABRIC			
NA01-R1-592A	1				

(THIS ILLUSTRATION CONSISTS OF 2 PAGES)

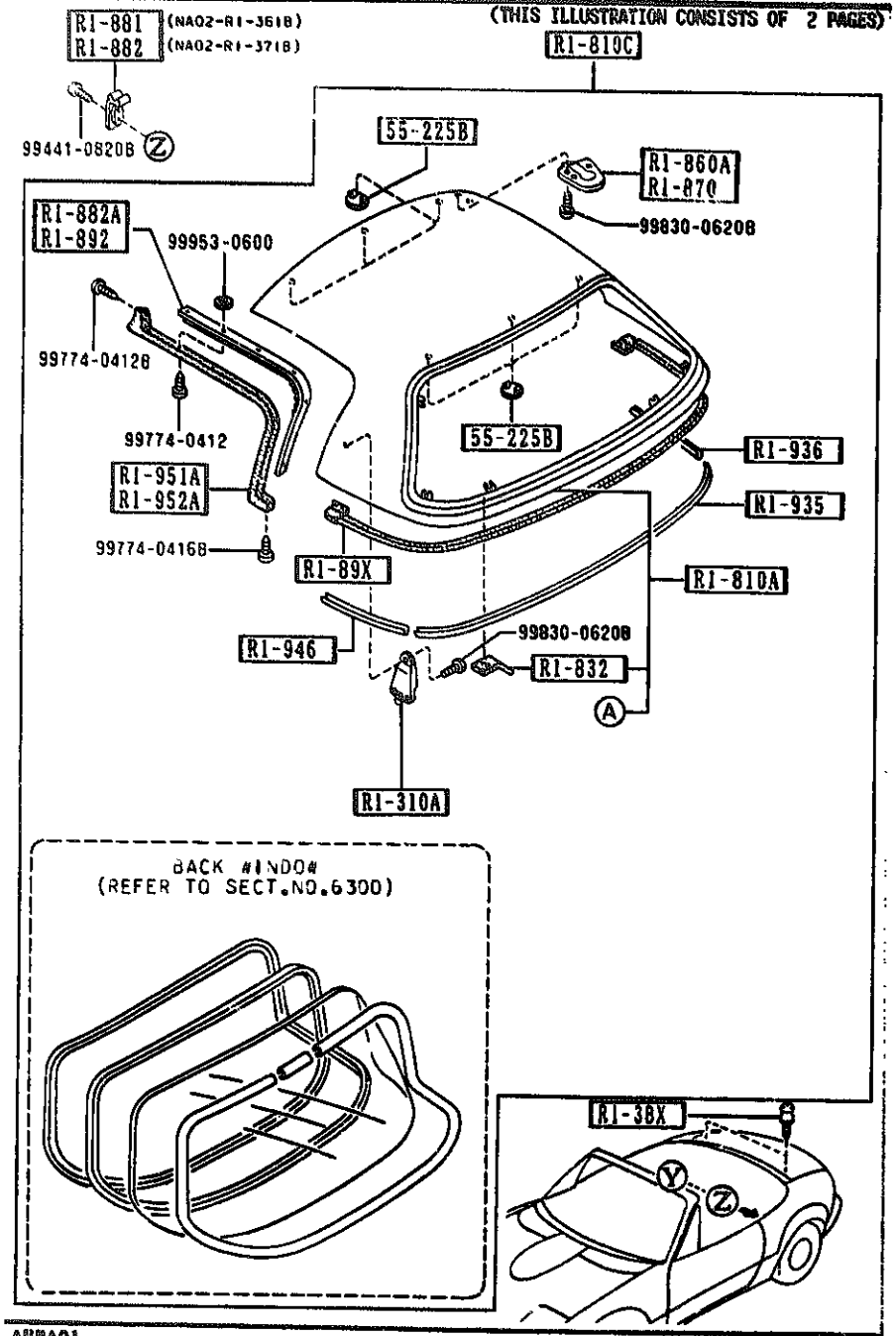

AURA01

PART NO.	QTY	MODEL/RESTRICTION	MODEL/RESTRICTION	MODEL/RESTRICTION	FROM-TO
R1-711		WTHSTP,FRONT HEADER			
NA01-R1-711B	1				
R1-721A		WTHSTP(R),CAB SIDE			
NA01-R1-721A A (NA01-R1-721B)	1				-0116
NA01-R1-721B	1				0116-
R1-731		WTHSTP(L),CAB SIDE			
NA01-R1-731A A (NA01-R1-731B)	1				-0116
NA01-R1-731B	1				0116-
R1-741		PROTR(R),MOULD-BELT LINE			
NA01-R1-741A A (NA01-R1-741B)	1				-9601
NA01-R1-741B	1				9601-
R1-742		PROTR(L),MOULD-BELT LINE			
NA01-R1-742A A (NA01-R1-742B)	1				-9601
NA01-R1-742B	1				9601-
R1-750		MOULD,BELTLINE-REAR			
NA01-R1-750B A (NA01-R1-750C)	1				-9601
NA01-R1-750C AN(NA01-R1-750D)	1				9601-0403
NA01-R1-750D	1				0403-
R1-780		COVER(R),DRAIN-SOFT TOP			
NA01-R1-780C	1				
R1-786		GROMMET,DRAIN HOSE-TOP			
NA01-R1-786 AN(NA01-R1-786A)	2				-9420
NA01-R1-786A	2				9420-
R1-790		COVER(L),DRAIN-SOFT TOP			
NA01-R1-790C	1				
R1-810A		PANEL,ROOF			

9420 NA35##-101198
9601 NA35##-106797
0116 NA35##-134600
0403 NA35##-146744

CAT. AURA01-97

1992-02

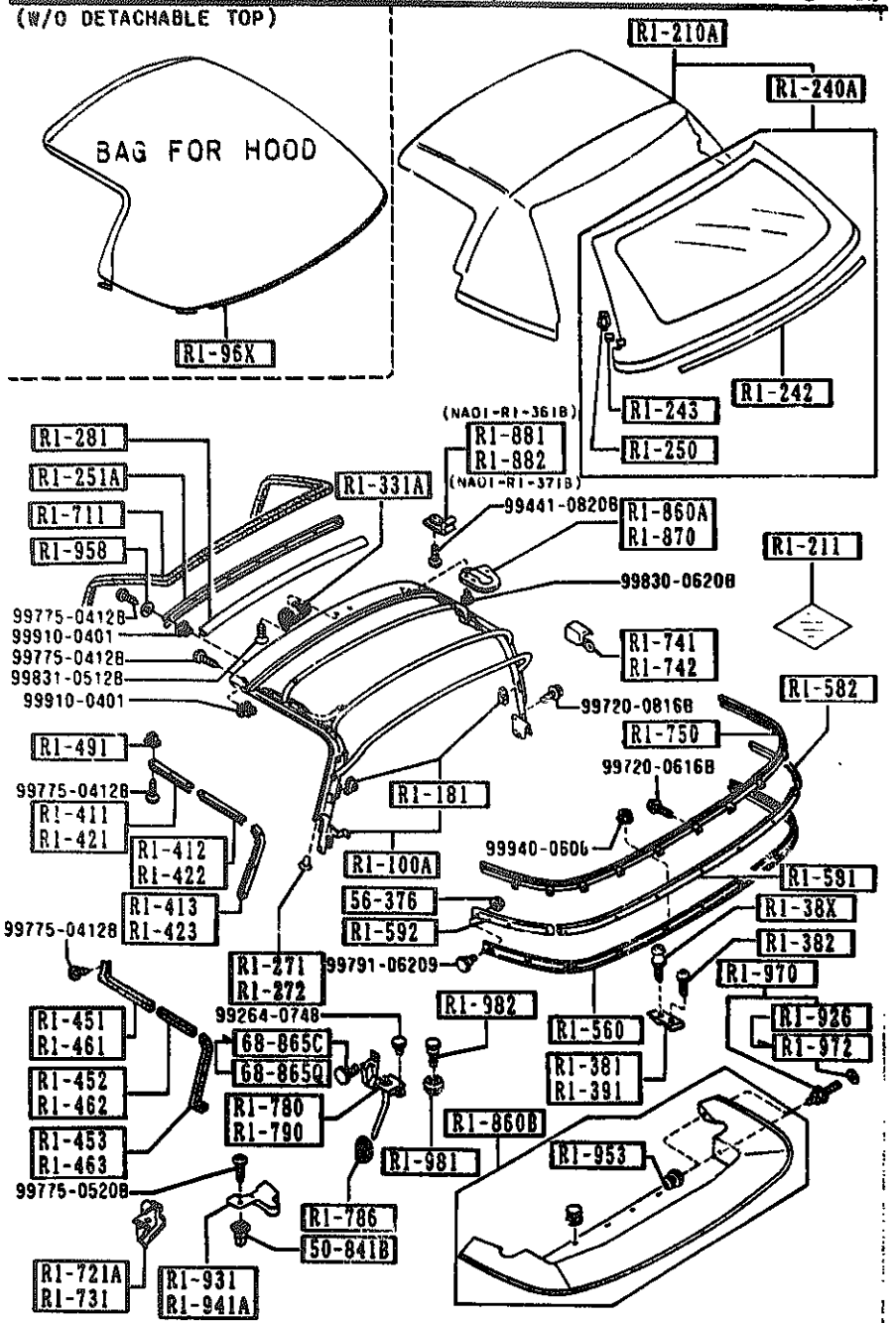

AUNA01 (CONT'D)

6330 -5 SUNROOF

PART NO.	QTY	MODEL/RESTRICTION	MODEL/RESTRICTION	MODEL/RESTRICTION	FROM-TO
CONT'D					
NA02-R1-82X A (NA02-R1-82XA)	1				-0101
NA02-R1-82XA	1	OPTION, (W/DETACHABLE TOP-B. COLOR,)			0101-
NA03-R1-82X	1	OPTION, (W/DETACHABLE TOP,BL UE)			0401-
NA04-R1-82X	1	OPTION, (W/DETACHABLE TOP,WH ITE)			0401-
R1-810C		ROOF,DETACHABLE TOP			
NA02-R1-810C A (NA02-R1-810E)	1				-0101
NA02-R1-810E AN(NA02-R1-810F)	1				0101-0201
NA02-R1-810F	1	OPTION, (W/DETACHABLE TOP-B. COLOR,)			0201-
NA03-R1-810	1	OPTION, (W/DETACHABLE TOP,BL UE)			0401-
NA04-R1-810	1	OPTION, (W/DETACHABLE TOP,WH ITE)			0401-
R1-832		PLATE,CUSHION-D. TOP			
NA01-R1-832A	2				
R1-860A		LOCK(R),TOP			
NA01-R1-310A A (NA01-R1-310B)	1				-0101
NA01-R1-310B	1				0101-
R1-860B		BOOT,TOP			
NA01-R1-960B	1				
66		NA0 BLACK			
R1-870		LOCK(L),TOP			
NA01-R1-320A A (NA01-R1-320B)	1				-0101
NA01-R1-320B	1				0101-
R1-881		STRIKER(R),LOCK-TOP			
NA01-R1-361A	1				-0201

0101 NA35##-133591
0201 NA35##-137180
0401 NA35##-146561

6330 SUNROOF (2/2)

(THIS ILLUSTRATION CONSISTS OF 2 PAGES)

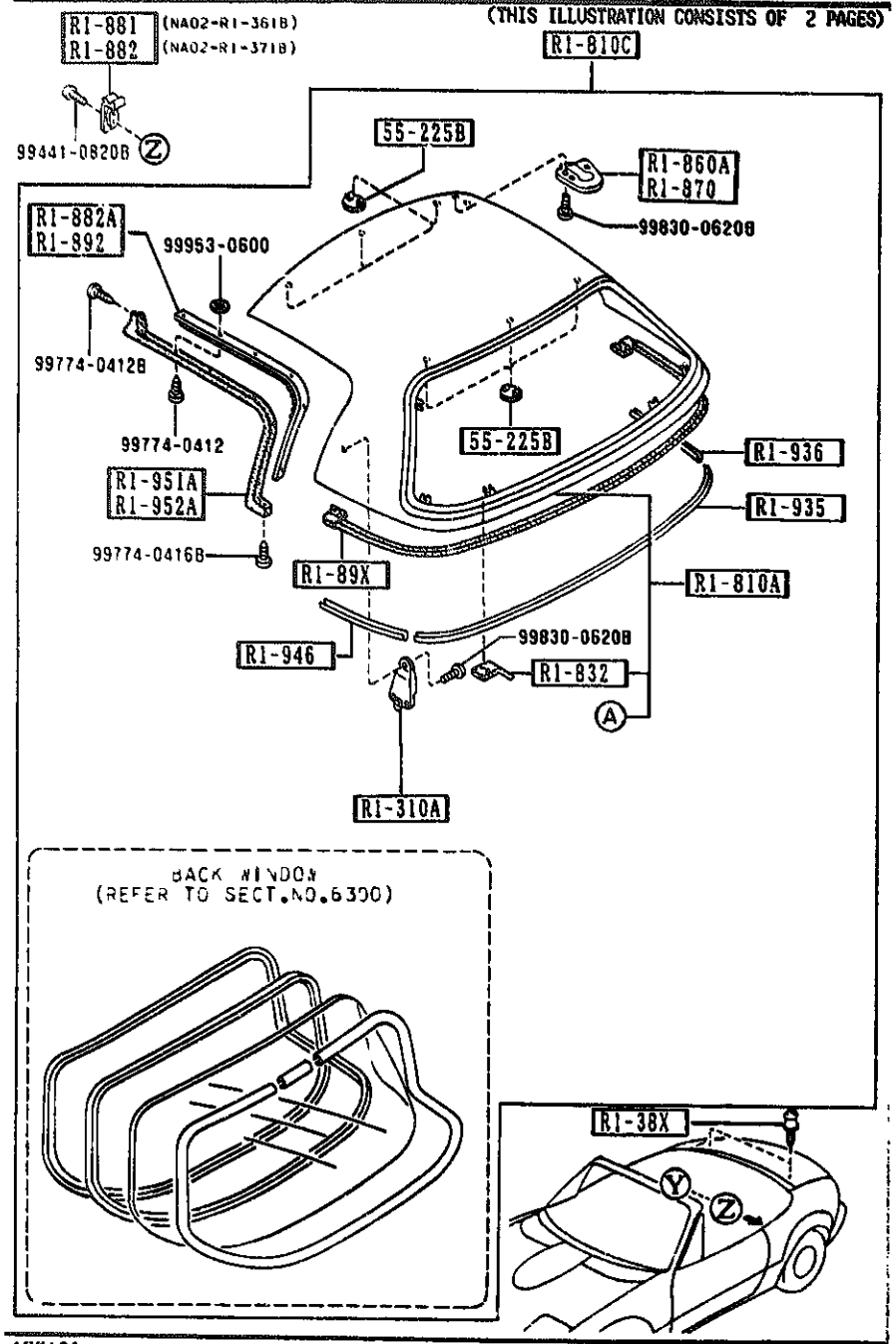

AUNA01

PART NO.	QTY	MODEL/RESTRICTION	MODEL/RESTRICTION	MODEL/RESTRICTION	FROM-TO
CONT'D A (NA01-R1-361B)					
NA02-R1-361A A (NA02-R1-361B)	1				-0201
NA01-R1-361B	1				0201-
NA02-R1-361B	1				0201-
R1-882		STRIKER(L),LOCK-TOP			
NA01-R1-371A A (NA01-R1-371B)	1				-0201
NA02-R1-371A A (NA02-R1-371B)	1				-0201
NA01-R1-371B	1				0201-
NA02-R1-371B	1				0201-
R1-882A		RETAINER(R),WTHSTP-D.TOP			
NA01-R1-882	1				
R1-89X		WEATHERSTRIP,D.TOP-REAR			
NA01-R1-89XA	1				
R1-892		RETAINER(L),WTHSTP-D.TOP			
NA01-R1-892	1				
R1-926		WASHER,HOOK-HOOD COVER			
FB67-R1-926A	4				-9701
R1-931		COVER(R),BELT LINE			
NA01-R1-931A	1				
R1-935		PROTECTOR(C),EDGE-D.TOP			
NA01-R1-935A	1				
R1-936		PROTECTOR(R),EDGE-D.TOP			
NA01-R1-936	1				
R1-941A		COVER(L),BELT LINE			
NA01-R1-941A	1				
R1-946		PROTECTOR(L),EDGE-D.TOP			
NA01-R1-946	1				

9701 NA35##-111969
0201 NA35##-137188

CAT. AUNA01-07

1992-02

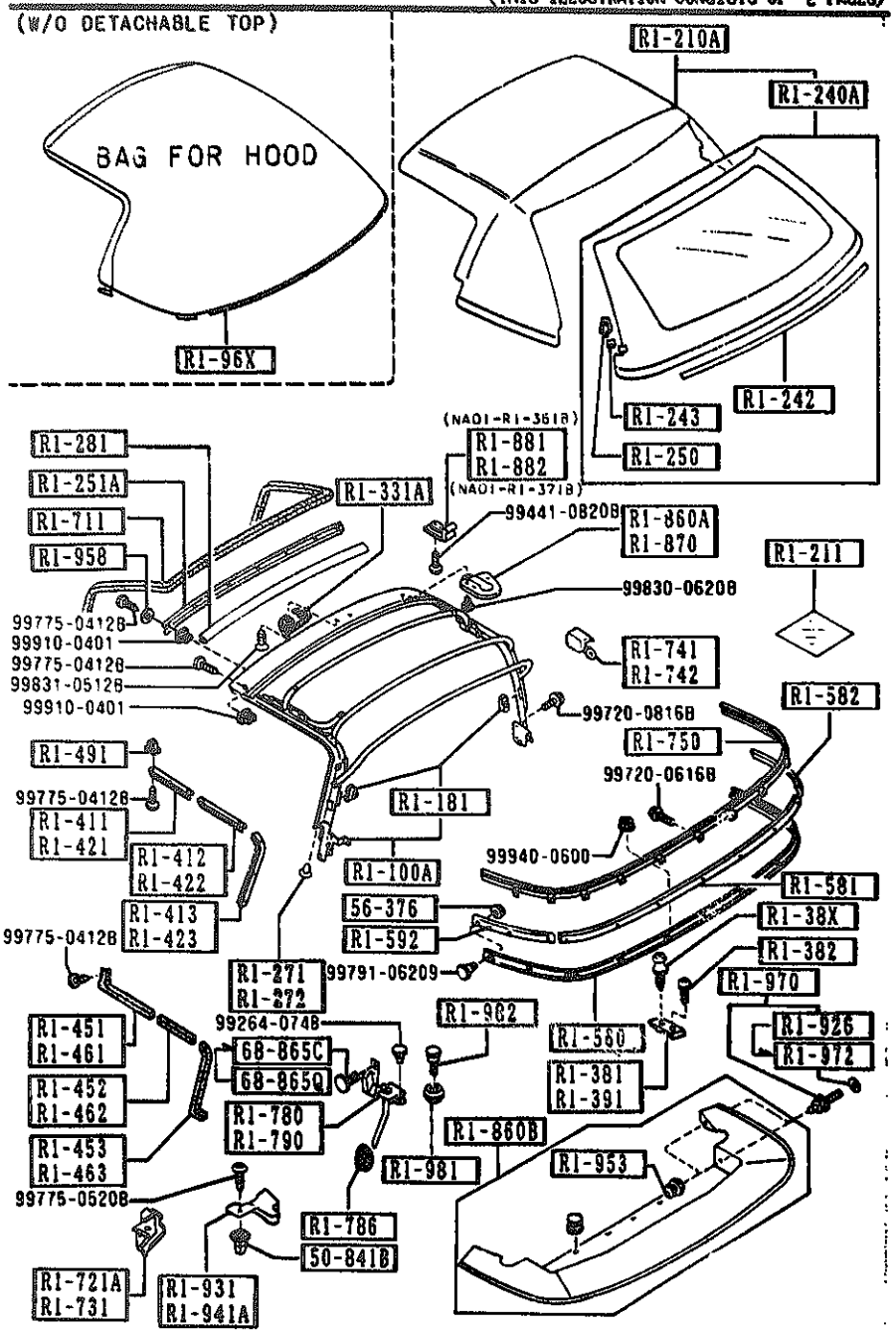

AUNA01 (CONT'D)

PART NO.	QTY	MODEL/RESTRICTION	MODEL/RESTRICTION	MODEL/RESTRICTION	FROM-TO
R1-951A		WTHSTP(R),ROOF PANEL			
NA01-R1-881B	1				
R1-952A		WTHSTP(L),ROOF PANEL			
NA01-R1-891B	1				
R1-953		HOOK,HOOD-REAR CORNER			
B235-R1-953	4				
R1-958		WASHER,HOOK'A'&'B'			
B235-R1-958A	7				
R1-96X		COVER,TOP FABRIC			
NA01-R1-96XA A (NA01-R1-96XB)	1				-9C01
NA01-R1-96XB	1				9C01-
R1-970		HOOK,REAR DECK			
NA01-R1-970 A (NA01-R1-970A)	4				-9701
NA01-R1-970A	4				9701-
R1-972		WASHER,HOOK'A'			
NA01-R1-926	6				9701-
R1-981		STOPPER,SOFT TOP			
NA01-R1-981A	2				
R1-982		BOLT,STOPPER-SOFT TOP			
NA01-R1-982A	2				
50-841B		GROMMET,SCREW			
H260-50-841	2				
55-2258		COVER,HOLE			
G030-55-223	6				
00		NA0 NA1 BLACK			
56-376		NUT,SELF LOCK			
8001-56-376	13				

9701 NA35##-111969
9C01 NA35##-130310

(THIS ILLUSTRATION CONSISTS OF 2 PAGES)

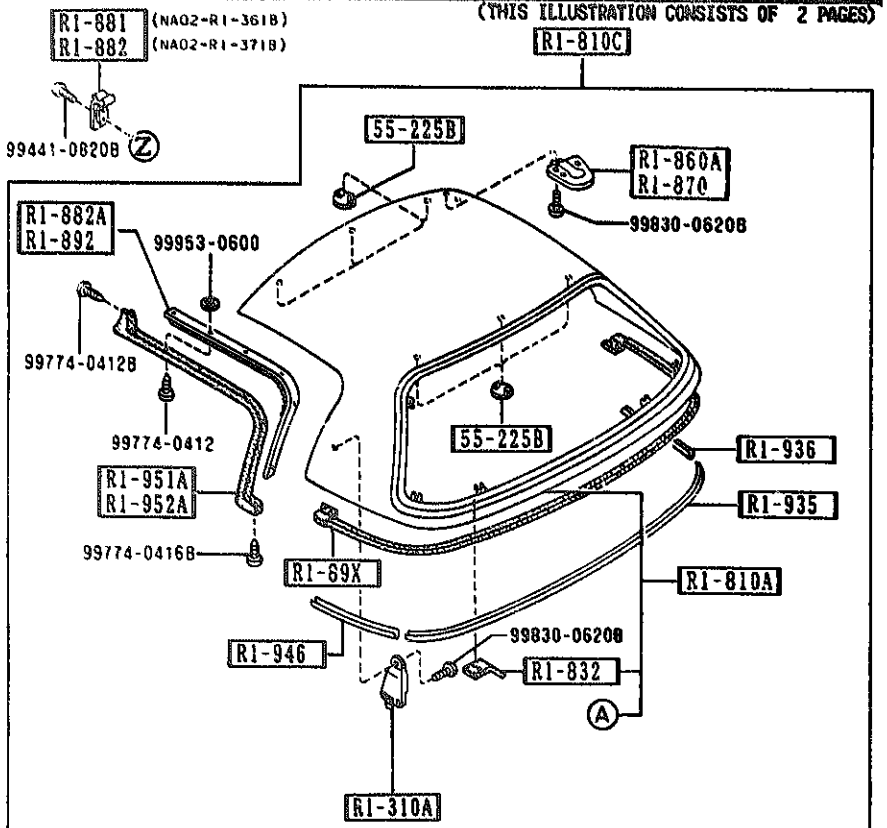

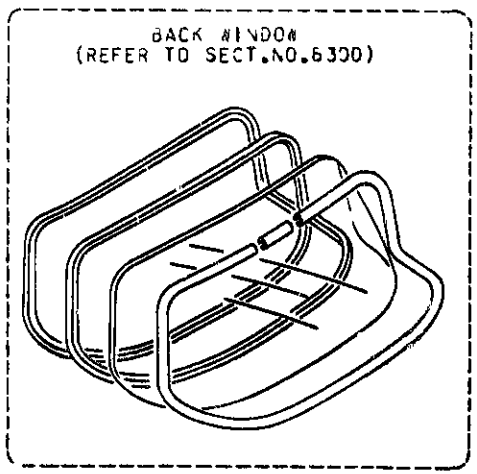

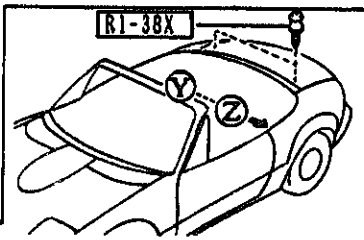

PART NO.	QTY	MODEL/RESTRICTION	MODEL/RESTRICTION	MODEL/RESTRICTION	FROM-TO
68-865C		FASTENER			
G032-68-865A	2				9801-
00		NAO BLACK			
68-865Q		FASTENER			
GJ21-68-885A AN(GJ21-68-885B)	2				-9526
00		NAO BLACK			
GJ21-68-885B	2				9526-9801
00		NAO BLACK			

9526 NA3S※※-105742
9801 NA3S※※-116316

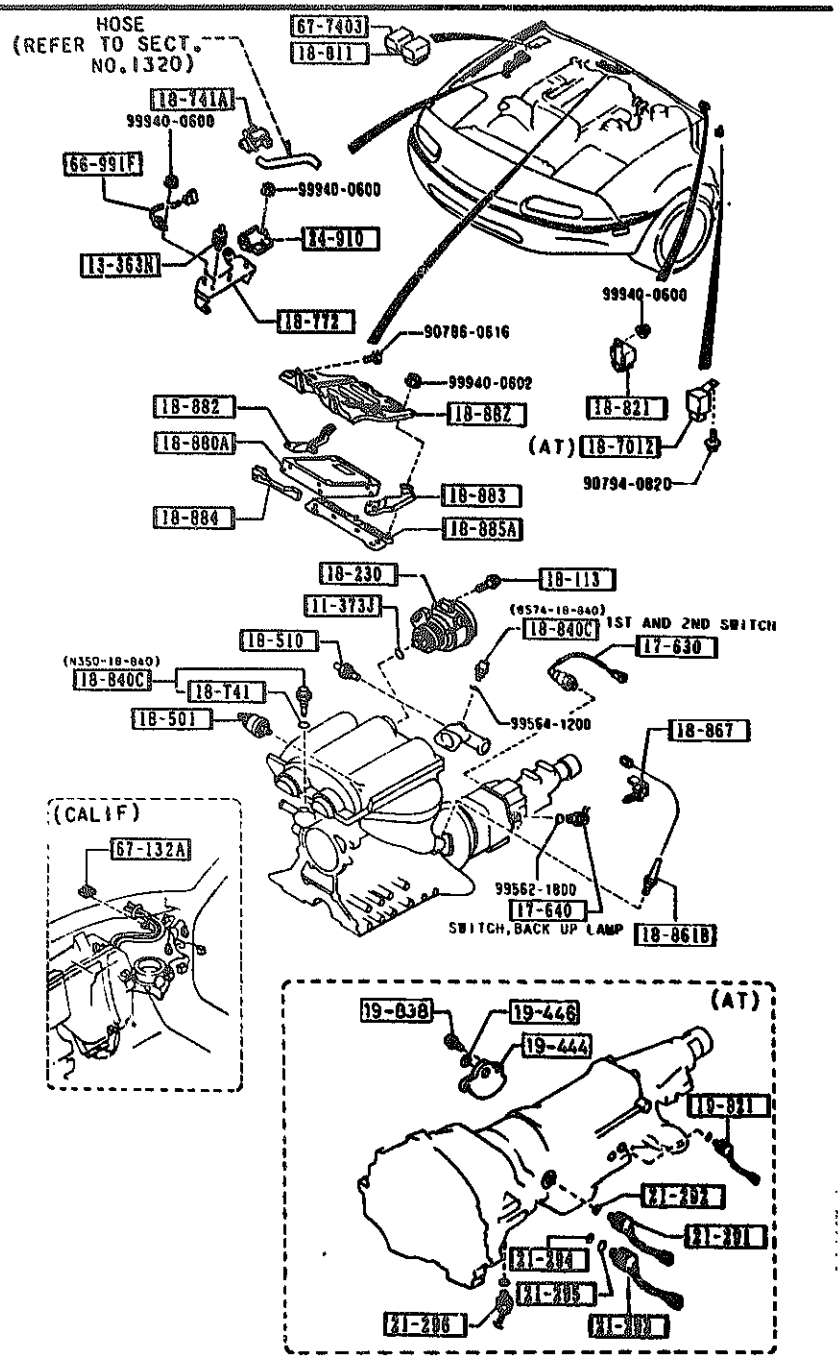

PART NO.	QTY	MODEL/RESTRICTION	MODEL/RESTRICTION	MODEL/RESTRICTION	FROM-TO
11-373J		RING,'O'			
99541-03801	1				
13-363N		RUBBER,MOUNTING			
0222-13-363	1				
17-630		SWITCH			
8118-17-640A A (8118-17-640B)	1				-9501
8118-17-640B	1	(MT)			9501-
17-640		SWITCH,BACK UP LAMP			
1391-17-640	1	(MT)			-9831
M506-17-640	1	(MT)			9831-
18-T41		RING,'O'-WATER THERM O SW.			
F885-18-T41	1				
18-113		BOLT			
B366-18-1A5	1				
18-230		SENSOR,CRANK ANGLE			
B61P-18-230	1				
18-501		SWITCH,OIL PRESSURE			
B61P-18-501	1				
18-510		UNIT,HEAT GAUGE			
B541-18-51X	1				
18-7012		UNIT,CONTROL			
B64J-18-780A A (B64J-18-780B)	1				-0401
B64J-18-780B	1	(AT)			0401-
18-741A		VALVE,THREE WAY			
JE16-18-741	1	NIHON OIL SEAL			
18-772		BRACKET,IGNITER			
B61P-18-2F0A	1				-9A01

9501 NA35##-102613
9831 NA35##-119088
9A01 NA35##-122908
0401 NA35##-146561

6600 -2 SWITCHES & RELAYS (ENGINE)

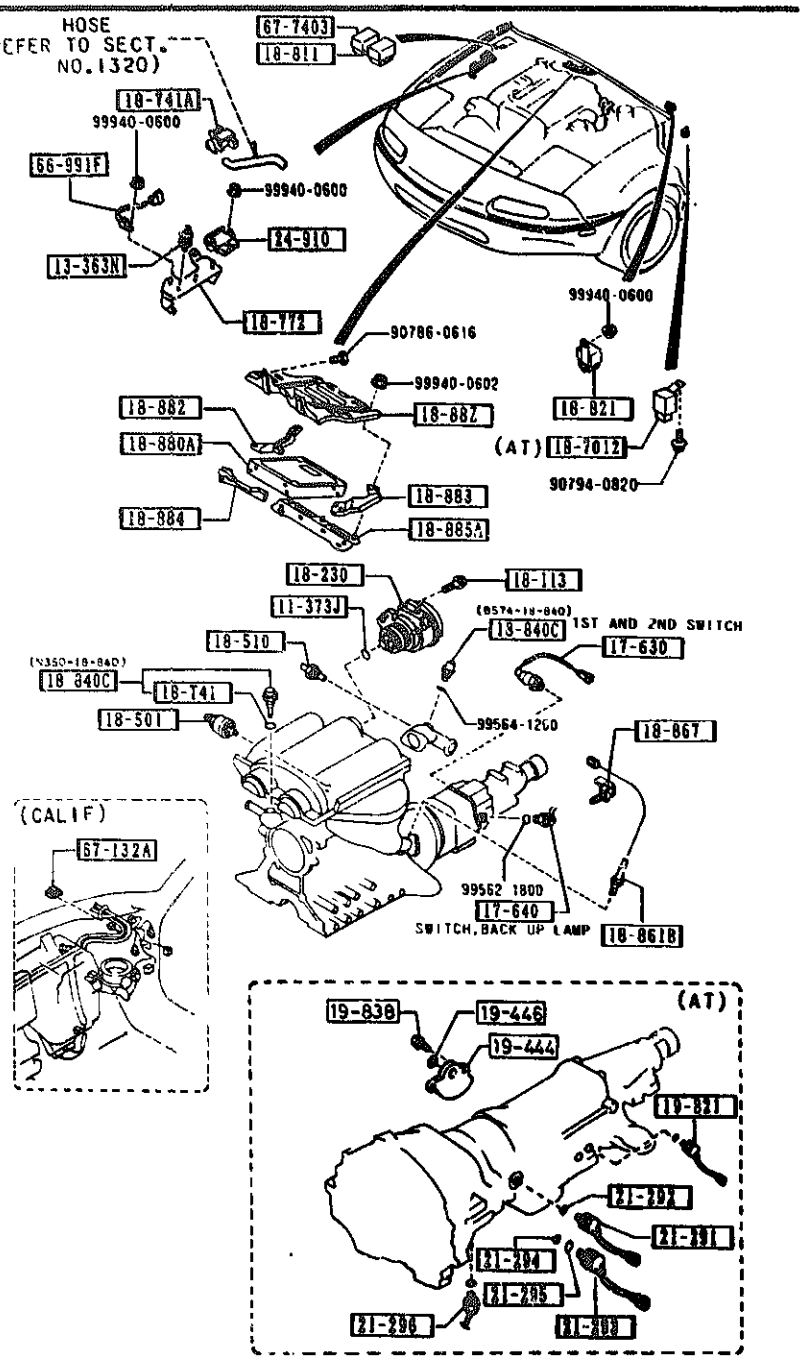

PART NO.	QTY	MODEL/RESTRICTION	MODEL/RESTRICTION	MODEL/RESTRICTION	FROM-TO
CONT'D					
B61P-18-2F0B	1				9A01-
| 18-811 |		RELAY,MAIN			
B6S8-18-811	1				
| 18-821 |		RELAY,CIRCUIT OPEN			
N236-18-821	1				
| 18-840C |		SENSOR,WATER TEMP.			
N350-18-840	1	DENSO			
8574-18-840	1	NIHON THERMOSTAT			
| 18-861B |		SENSOR,OXYGEN			
B61R-18-861A	1				
| 18-867 |		CLIP			
FE30-18-867A	2				
| 18-88Z |		COVER,CONTROL UNIT			
B61P-18-889A	1				
| 18-880A |		CONTROL UNIT,E.G.I.			
B61P-18-881A	1	(MT)			
B64J-18-881	1	(AT)			
| 18-882 |		BRACKET,CONTROL UNIT			
B61P-18-882	1				
| 18-883 |		BRACKET,CONTROL UNIT			
B61P-18-883	1				
| 18-884 |		BRACKET,CONTROL UNIT			
B61P-18-884	1				
| 18-885A |		BRACKET,CONTROL UNIT			
B61P-18-885	1				
| 19-444 |		SWITCH,INHIBITOR			
BU55-19-444A	1	(AT)			

9A01 NA35##-122908

SECTION NAME INDEX (BODY)

LO.NO	SEC.NO	SECTION NAME
2-C05	0900	KEY SETS
2-E05	5000	FRONT BUMPER
2-H05	5010	REAR BUMPER
2-J05	5030	WINDOW MOULDING & COWL GRILLES
2-L05	5100	HEAD LAMPS
2-M05	5103	HEAD LAMP RETRACTORS
2-D06	5105	FRONT COMBINATION LAMPS
2-F06	5110	REAR COMBINATION LAMPS
2-I06	5120	LICENSE LAMPS
2-J06	5180	REAR FINISHER
2-L06	5230	BONNET
2-N06	5260	TRUNK LID
2-D07	5310	BODY PANELS (FRONT)
2-E07	5320	BODY PANELS (FENDER & WHEEL APRON)
2-H07	5330	BODY PANELS (DASH & COWL PANEL)
2-I07	5340	BODY PANELS (SIDE)
2-C08	5370	BODY PANELS (FLOOR)
2-F08	5380	FLOOR ATTACHMENTS (HOLE COVERS)
2-G08	5390	FLOOR ATTACHMENTS
2-C09	5500	DASHBOARD EQUIPMENTS
2-E09	5520	METER HOOD
2-F09	5530	SPEEDOMETER CABLE
2-G09	5540	METER COMPONENTS
2-I09	5560	DASHBOARD & RELATED PARTS
2-L09	5570	CONSOLE
2-C10	5580	VENTILATOR
2-D10	5700	SEATS
2-K10	5790	SEAT BELTS
2-L10	5800	FRONT DOORS
2-C11	5830	FRONT DOOR MECHANISMS
2-F11	5840	FRONT DOOR TRIMS & RELATED PARTS
2-C12	6100	HEATER
2-D12	6110	HEATER UNIT COMPONENTS
2-E12	6115	HEATER CONTROLS COMPONENTS
2-F12	6120	HEATER BLOWER COMPONENTS
2-G12	6130	AIR CONDITIONER
2-K12	6135	O RING SET,PIPING
2-L12	6140	COMPRESSOR COMPONENTS (AIR CONDITIONER)
2-N12	6150	COOLING UNIT (AIR CONDITIONER)
2-C13	6300	WINDOW GLASSES
2-D13	6330	SUNROOF
2-M13	6600	SWITCHES & RELAYS (ENGINE)
2-D14	6610	DASHBOARD SWITCHES
2-E14	6611	COMBINATION SWITCH
2-F14	6630	RELAYS & UNIT (BODY)
2-G14	6635	DOOR SWITCH & HORNS
2-H14	6640	AUTO CRUISE CONTROL SYSTEM
2-I14	6680	AUDIO SYSTEMS (RADIO & TAPE DECK)
2-K14	6682	AUDIO SYSTEMS (ANTENNA & SPEAKER)
2-L14	6700	WIRING HARNESSES(FRONT & REAR)
2-N14	6701	WIRING HARNESSES(ENGINE & T/MISSION)
2-D15	6702	WIRING HARNESSES(DASHBOARD)
2-E15	6703	WIRING HARNESSES(DOOR,FLOOR/CEILING)
2-F15	6704	WIRING HARNESS CLAMPS
2-I15	6720	WINDSHIELD WASHER
2-K15	6730	WINDSHIELD WIPERS
2-M15	6740	WIPER MOTOR COMPONENTS(FRONT)
2-N15	6820	FRONT HEADER TRIM & PILLAR TRIMS
2-C16	6840	TRIMS & SCUFF PLATES
2-E16	6860	FLOOR MATS & PADS
2-G16	6870	SERVICE TOOLS
2-H16	6900	VISORS,ASSIST HANDLES & MIRRORS
2-J16	6930	CAUTION PLATES & LABELS
2-L16	7250	QUARTER WINDOW & TRIMS
3-C03	7900	ACCESSORIES

CATLOG-NO= AUNA01-07

DATE. 1992-02

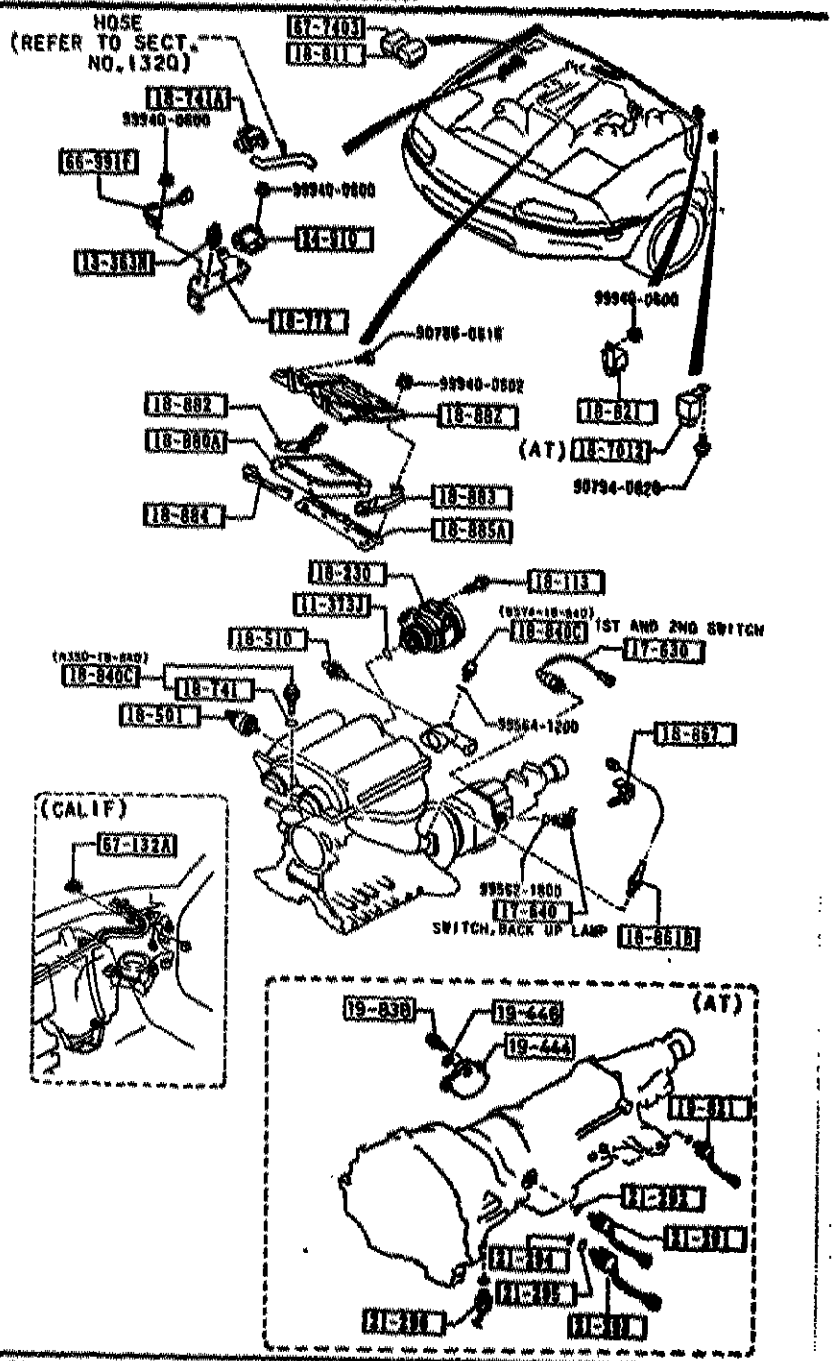

PART NO.	QTY	MODEL/RESTRICTION	MODEL/RESTRICTION	MODEL/RESTRICTION	FROM-TO
19-446		RING,'O'			
0338-19-446	1	(AT)			
19-821		SOLENOID,DOWN SHIFT			
BU55-19-821	1	(AT)			
19-838		BOLT-HEX,HD WASHER			
1758-19-838	2				
21-291		SWITCH,OIL PRESSURE			
BU55-21-2J1	1	(AT)			
21-292		RING 'O'			
BU01-21-292A	1	(AT)			
21-293		SOLENOID,OVER DRIVE			
BU55-21-2J3	1	(AT)			
21-294		RING,'O'			
BU01-21-294	1	(AT)			
21-295		RING,'O'			
BU01-21-295	1	(AT)			
21-296		SOLENOID,LOCK UP CONTROL			
BU55-21-3A5	1	(AT)			
24-910		IGNITER SET			
861P-18-251	1				
66-991F		CONDENSER			
8376-66-991	1				
67-132A		CONNECTOR,SHORT			
MD23-67-741	1	(CALIF.)			
67-740S		RELAY,M.O.			
LA10-67-740	1	10A			

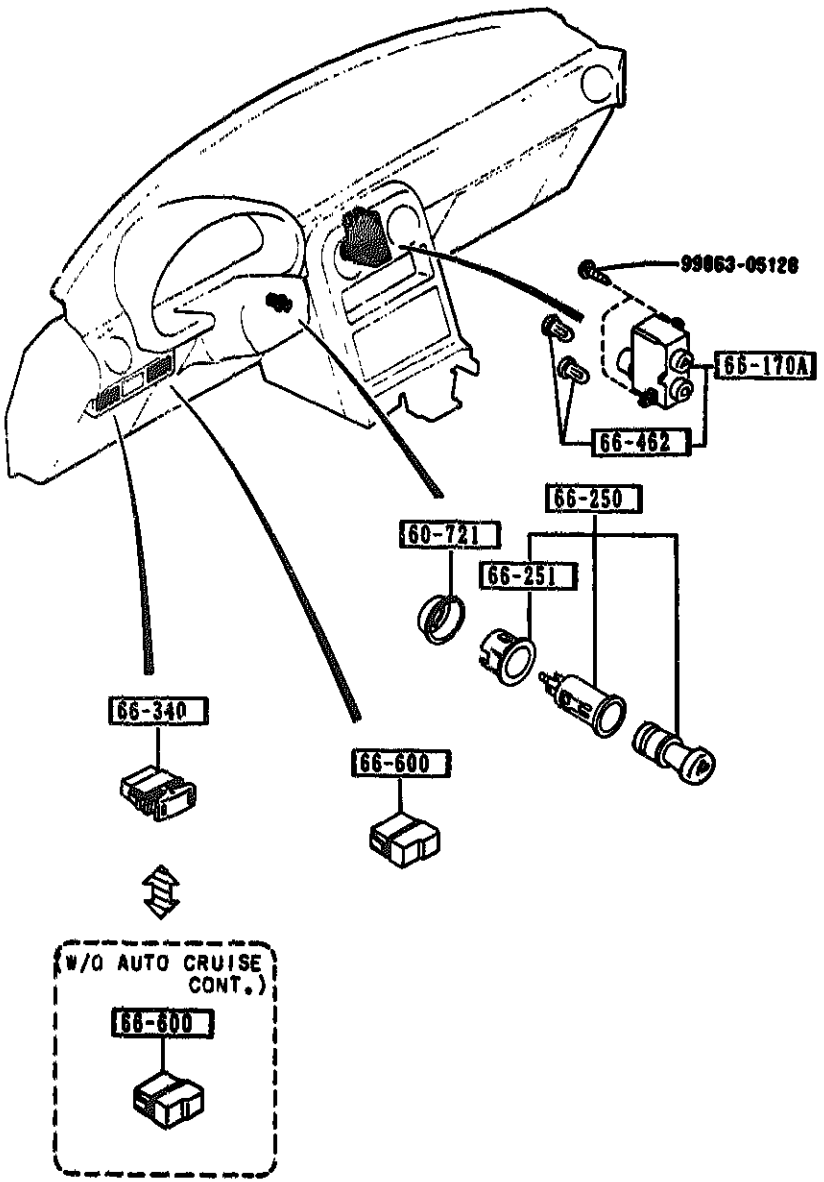

6610 -1 M DASHBOARD SWITCHES

PART NO.	QTY	MODEL/RESTRICTION	MODEL/RESTRICTION	MODEL/RESTRICTION	FROM-TO
60-721		PROTECTOR			
B092-66-241A	1				
66-170A		SWITCH(R),CLUSTER			
NA01-66-170	1				
66-250		LIGHTER.CIGAR			
B150-66-250	1				
66-251		RING,ILLUMINATION			
B001-66-251	1				
66-340		SWITCH,MAIN			
NA01-66-340A	1	PKG-OPT, (W/AUTO CRUISE CONT)			
66-462		BULB'B',SWITCH-RR DE FOGER			
NA01-66-462	2				
66-600		COVER,HOLE			
B481-55-225	1	PKG-OPT, (W/AUTO CRUISE CONT)			
	2	BASE, (W/O AUTO CRUISE CONT.)			

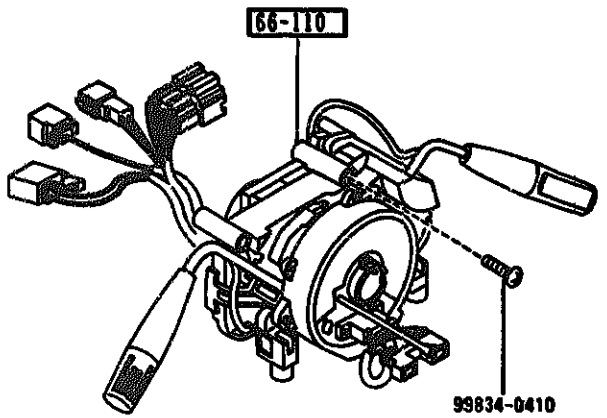

Component parts of COMBINATION SWITCH
are under establishment now.
Parts numbers will be informed you
by the Parts Engineering Change
Bulletin as soon as established.

PART NO.	QTY	MODEL/RESTRICTION	MODEL/RESTRICTION	MODEL/RESTRICTION	FROM-TO
66-110		SWITCH,COMBINATION			
MA01-66-120A	1	BASE, (W/O AUTO CRUISE CONT.)			
MA02-66-120A	1	PKG-OPT, (W/AUTO CRUISE CONT)			

6630 -1 M RELAYS & UNIT (BODY)

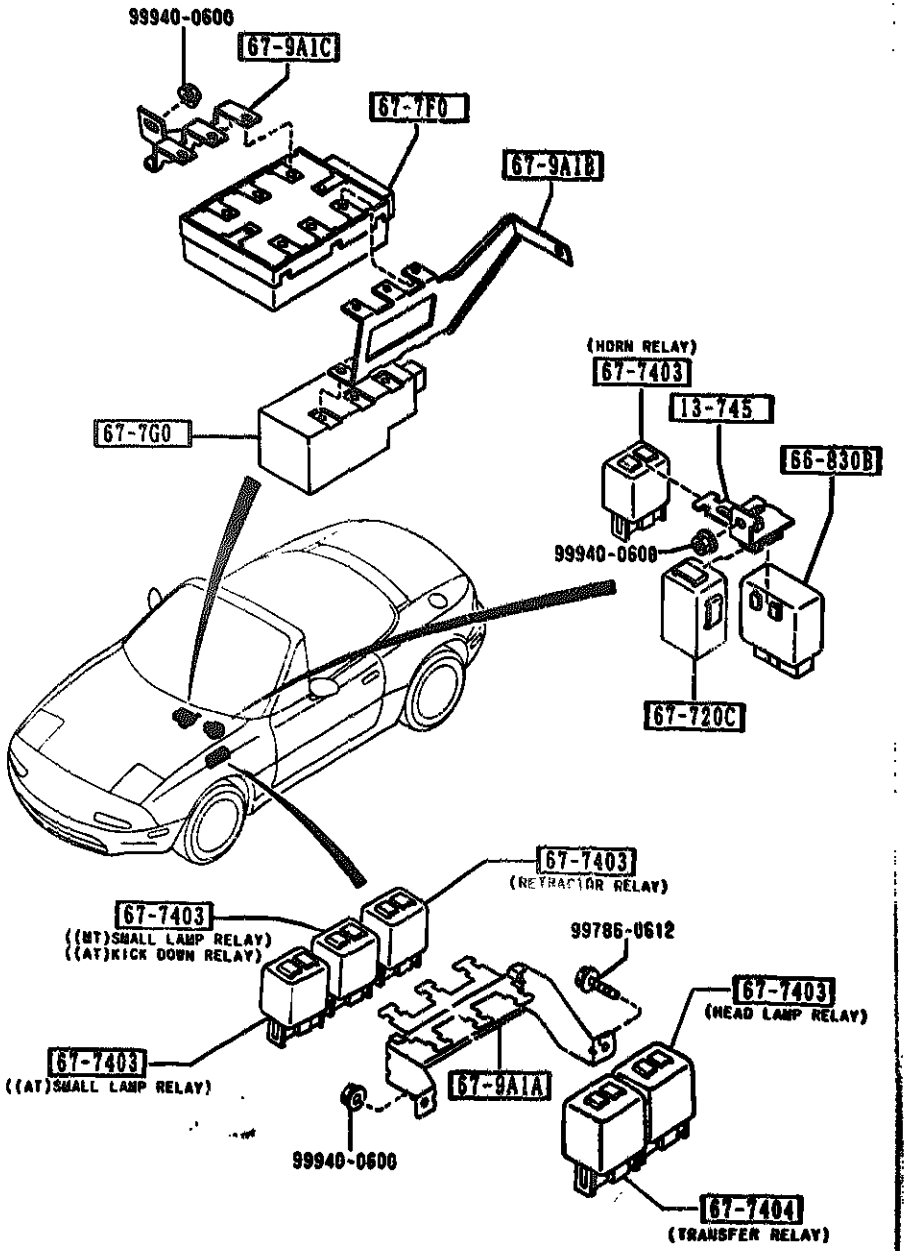

PART NO.	QTY	MODEL/RESTRICTION	MODEL/RESTRICTION	MODEL/RESTRICTION	FROM-TO
13-745		BRACKET,RELAY			
NA02-67-9A1	1				
66-830B		UNIT,FLASHER			
HE01-66-830	1				
67-7F0		UNIT,DIAGNOSIS-AIR BAG			
NA01-67-7F0	1				-9A01
NA01-67-7F0A	1				9A01-
67-7G0		UNIT,BACK UP POWER-A.BAG			
NA01-67-7G0 AN(NA01-67-7G0A)	1				-0302
NA01-67-7G0A	1				0302-
67-720C		TIMER & BUZZER			
NA02-67-720	1				
67-7403		RELAY,N.O.			
H500-67-740	1	30A (HEAD LAMP RELAY)			
LA10-67-740	2	10A (HORN RELAY) (SMALL LAMP RELAY) (MT)			
	3	(HORN RELAY) (SMALL LAMP RELAY) (KICK DOWN RELAY) (AT)			
LA12-67-740	1	(FOR RETRACTOR RELAY)			
67-7404		RELAY,TRANSFER			
HD22-67-740	1	(W/AIR BAG)			
67-9A1A		BRACKET,RELAY			
NA01-67-9A1	1				
67-9A1B		BRKT,DIAGNOSIS UNIT			
NA06-67-9A1B	1				
67-9A1C		BRKT,DIAGNOSIS/POWER UNIT			
NA05-67-9A1B	1				

9A01 NA35MM-122908
0302 NA35MM-142105

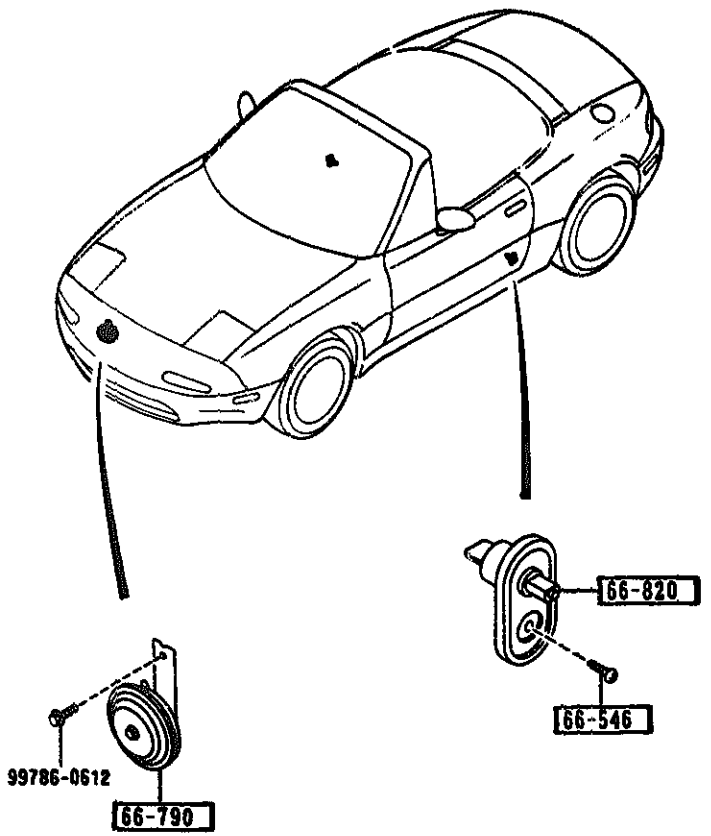

6635 -1 # DOOR SWITCH & HORNS

PART NO.	QTY	MODEL/RESTRICTION	MODEL/RESTRICTION	MODEL/RESTRICTION	FROM-TO
66-546		SCREW,DOOR SWITCH			
LA01-66-546	2				
66-790		HORN,LOW TONE			
SA59-66-790	1				
66-820		SWITCH,DOOR			
8455-66-540	2				

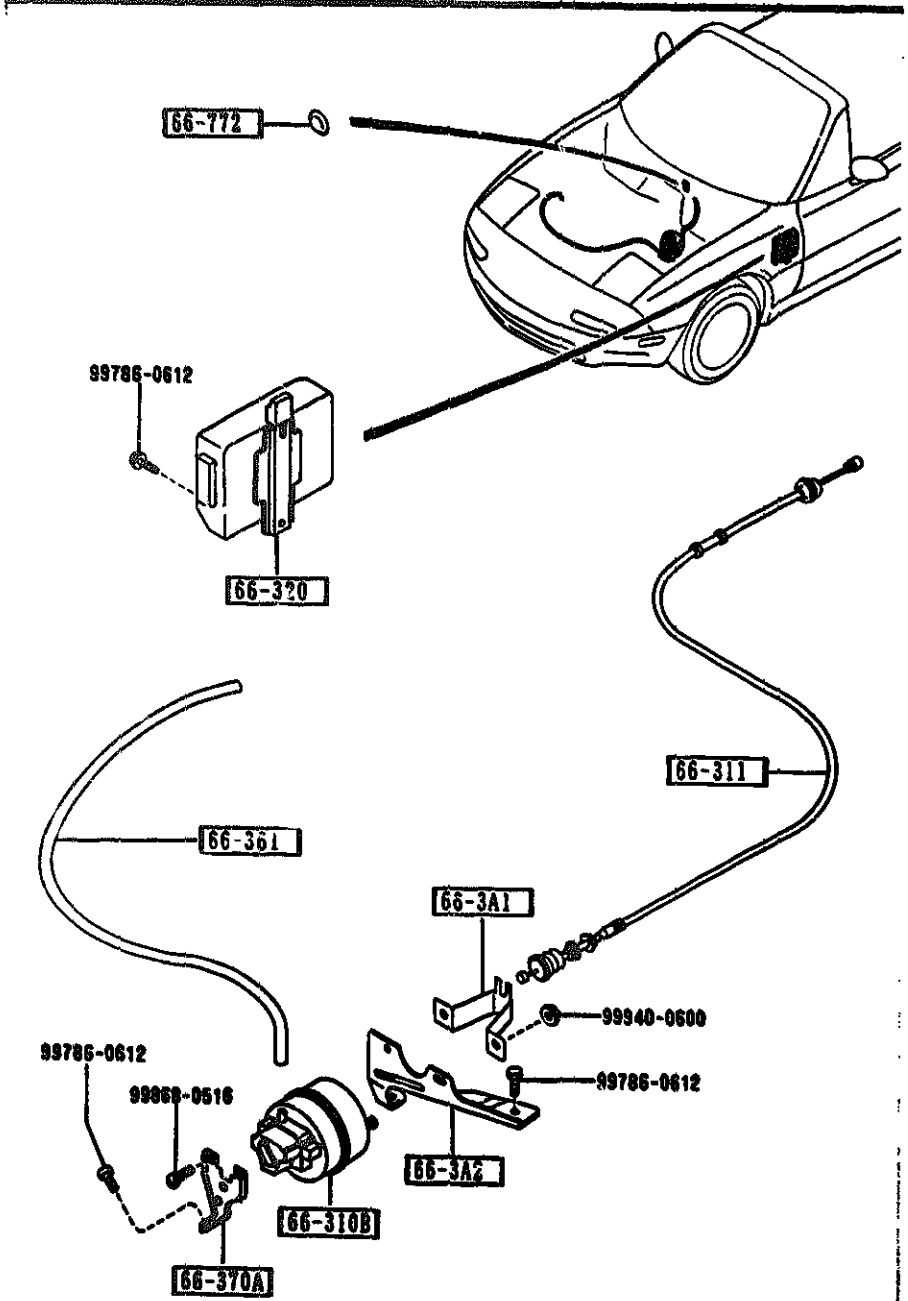

6640 -1 ※ AUTO CRUISE CONTROL SYSTEM

PART NO.	QTY	MODEL/RESTRICTION	MODEL/RESTRICTION	MODEL/RESTRICTION	FROM-TO
66-3A1		BRACKET,ACTUATER-A.C.C.			
LA01-66-3A1	1				
66-3A2		BRACKET,ACTUATOR-FRONT			
NA01-66-3A2A	1				
66-310B		ACTUATOR,A.C.C.			
LA01-66-310A	1				
66-311		WIRE,A.C.C.			
NA01-66-311A	1				
66-320		BOX,A.C.C.			
NA01-66-320	1	(MT)			
NA03-66-320	1	(AT)			
66-361		PIPE,AUTO CRUISE CONTROL			
NA01-66-361	1				
66-370A		BRACKET,ACTUATER			
NA01-66-3A3A	1				
66-772		GROMMET			
B092-41-661	1	BASE, (W/O AUTO CRUISE CONT.)			

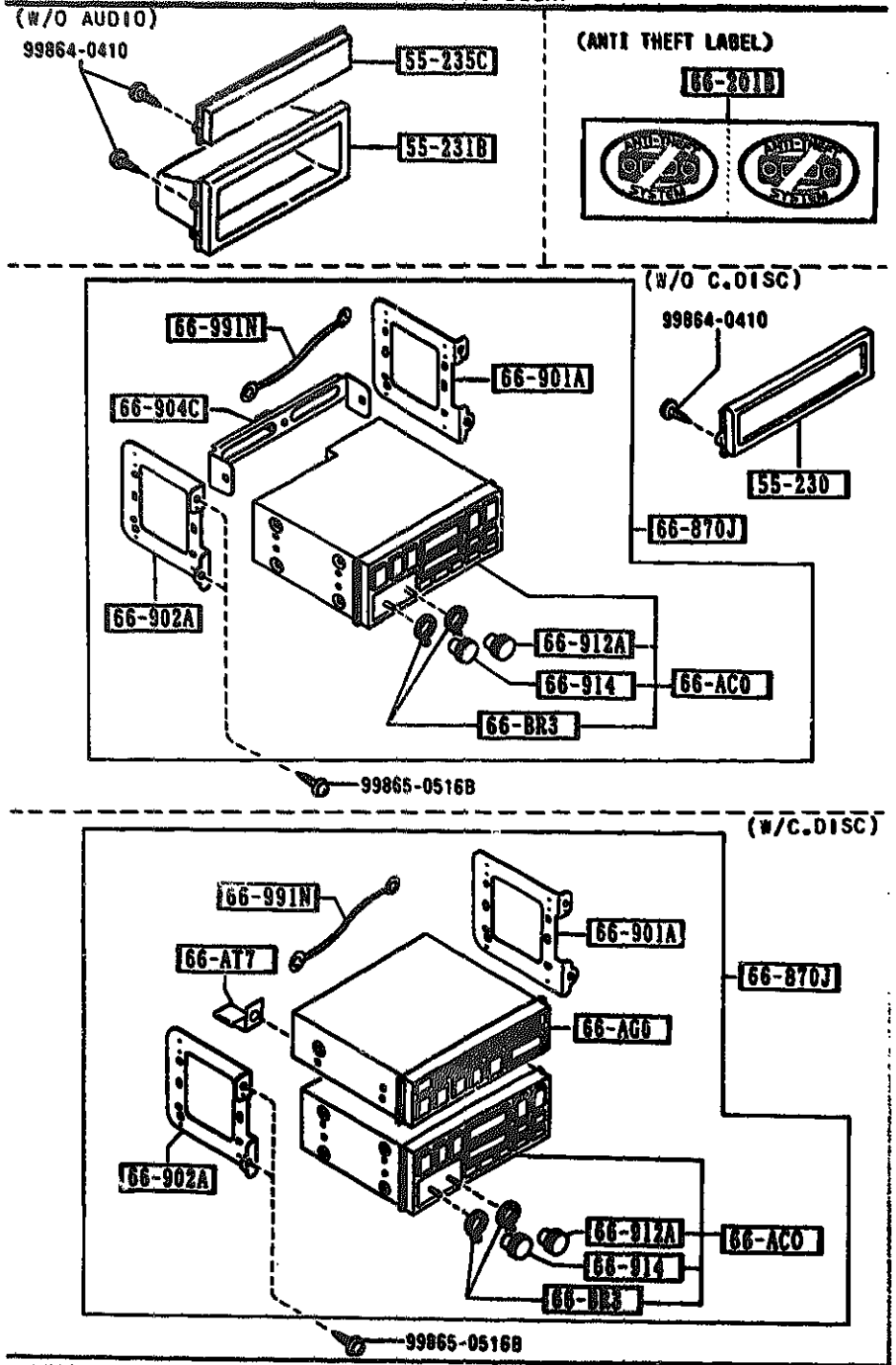

PART NO.	QTY	MODEL/RESTRICTION	MODEL/RESTRICTION	MODEL/RESTRICTION	FROM-TO
55-230		PANEL,AUDIO			
NA01-55-231	1	PKG-OPT, (W/AUDIO)			
55-231B		ORNAMENT,STEREO			
FC02-55-235 A (FC02-55-235A)	1				-9801
FC02-55-235A	1	BASE, (W/O AUDIO)			9801-
55-235C		ORNAMENT,STEREO-LOWER			
LA02-55-235	1	BASE, (W/O AUDIO)			
66-AC0		TUNER & DECK,COMB.			
NA01-66-AC0	1	PKG-OPT, (W/AUDIO)			
66-AG0		PLAYER,COMPACT DISC			
NA01-66-AG0	1	OPTION, (W/C.DISC)			
66-AT7		BRACKET(RR),AUDIO			
NA03-66-AT7	1	OPTION, (W/C.DISC)			
66-BR3		KNOB,BALANCE-TUNER			
NA01-66-BR3	2	PKG-OPT, (W/AUDIO)			
66-201B		LABEL,ANTI THEFT-AUDIO			
NA01-66-201	1	PKG-OPT, (W/AUDIO)			
66-870J		AUDIO SET			
NA02-66-9C0	1	PKG-OPT, (W/O C.DISC)			
NA03-66-9W0	1	OPTION, (W/C.DISC)			
66-901A		BRACKET(R),TUNER			
NA01-66-AT1	1				
66-902A		BRACKET(L),TUNER			
NA01-66-AT2	1				

9801 NA35MM-116316

6680 AUDIO SYSTEMS (RADIO & TAPE DECK)

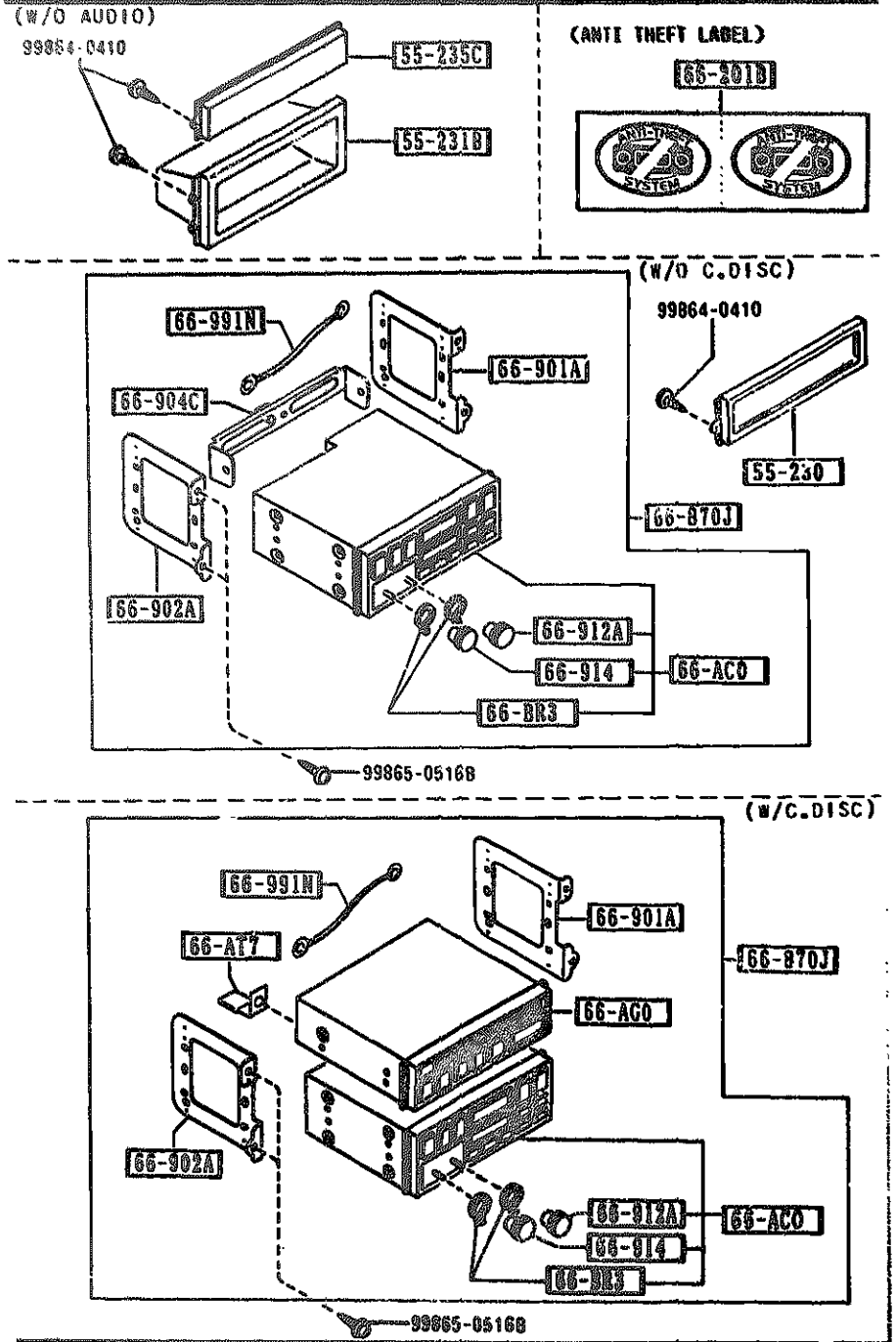

PART NO.	QTY	MODEL/RESTRICTION	MODEL/RESTRICTION	MODEL/RESTRICTION	FROM-TO
66-904C		BRACKET,LOW			
NA01-66-AT6	1	BASE, PKG-OPT, (W/O C.DISC)			
66-912A		KNOB,TONE-TUNER			
NA01-66-BR2	1	PKG-OPT, (W/AUDIO)			
66-914		KNOB,VOLUME-TUNER			
NA01-66-BR1	1	PKG-OPT, (W/AUDIO)			
66-991N		CORD,EARTH			
NA01-66-997	1				

6682 -1 M AUDIO SYSTEMS (ANTENNA & SPEAKER)

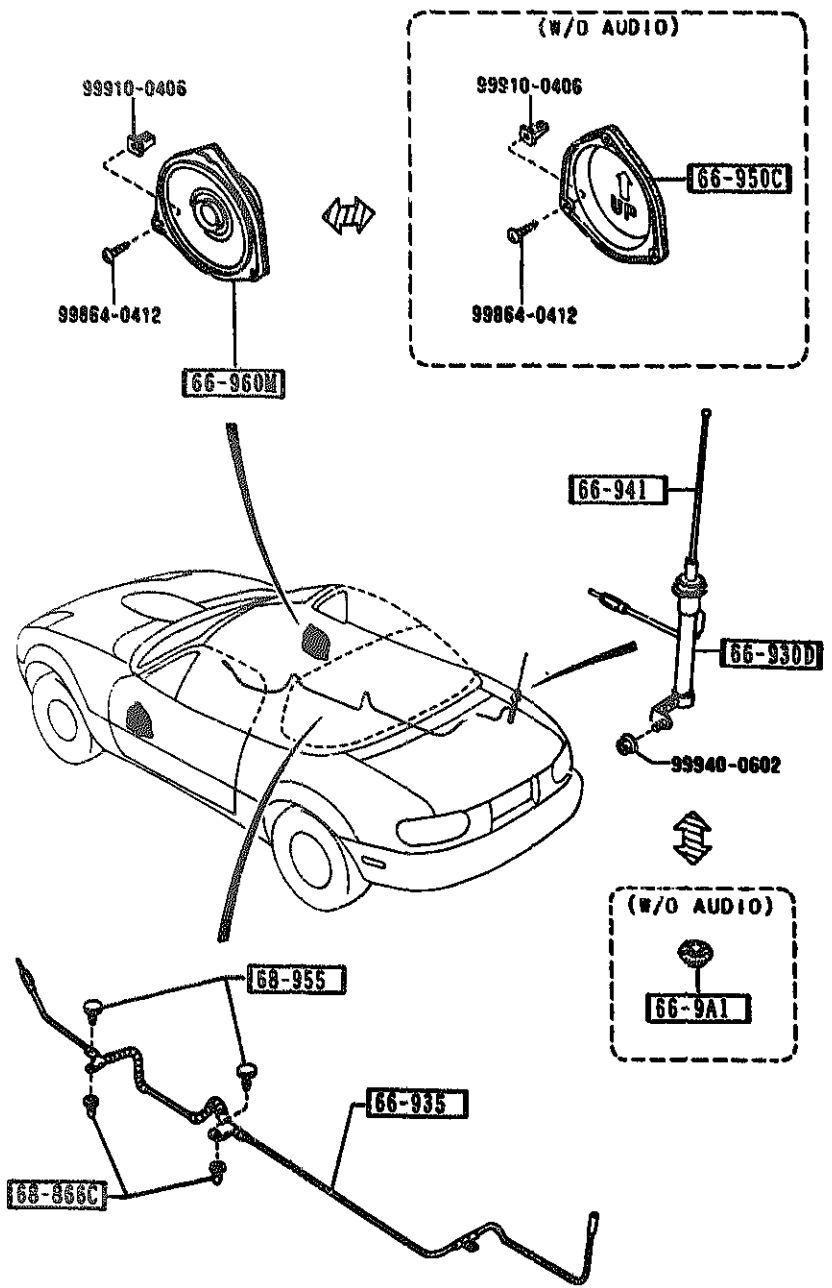

PART NO.	QTY	MODEL/RESTRICTION	MODEL/RESTRICTION	MODEL/RESTRICTION	FROM-TO
66-9A1		COVER,HOLE-ANTENNA			
FB01-66-9A1A	1	BASE, (W/O AUDIO)			
66-930D		BODY,LOW-RADIO ANTENNA			
NA01-66-A3X	1	PKG-OPT, (W/ANTENNA)			
66-935		FEEDER-ANTENNA			
NA01-66-940	1				
66-941		POLE,ANTENNA			
N001-66-A30	1	PKG-OPT, (W/ANTENNA)			
66-950C		BRACKET,LOUD SPEAKER			
NA01-66-9B0A	2	BASE, (W/O AUDIO)			
66-960M		SPEAKER,DOOR			
NA03-66-960A (NA03-66-96X)	2				-0702
NA03-66-96X	2	PKG-OPT, (W/ANTENNA)			0702-
68-866C		FASTENER,SEAL			
B235-68-865A	2				
68-955		FASTENER,LIFT GATE TRIM			
GJ37-68-955	2				
00		NA0 BLACK			

0702 NA35##-200195

6700 -1 WIRING HARNESSES(FRONT & REAR)

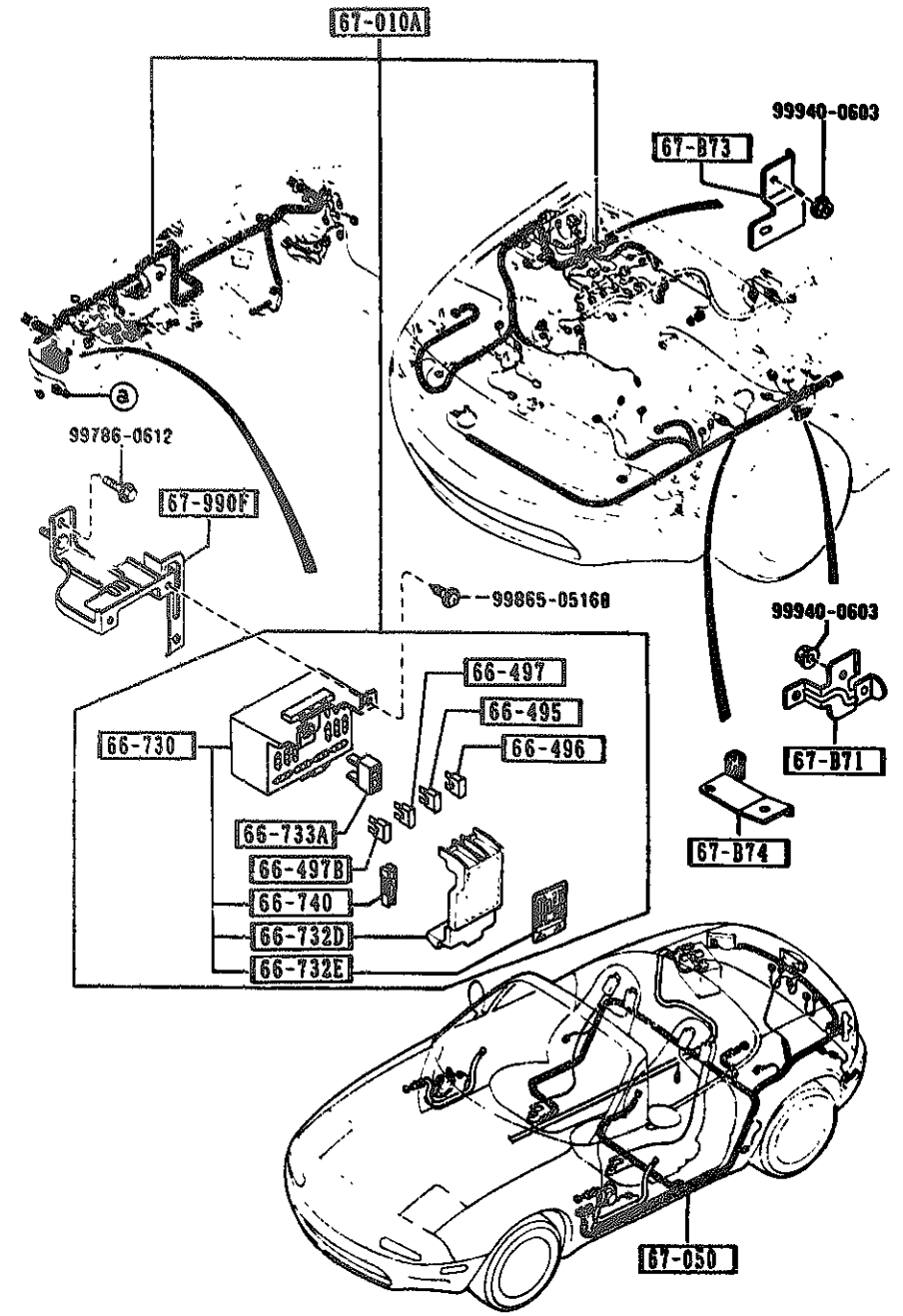

PART NO.	QTY	MODEL/RESTRICTION	MODEL/RESTRICTION	MODEL/RESTRICTION	FROM-TO
66-495		FUSE(10A)			
99705-1110	2				
66-496		FUSE(15A)			
99705-1115	6				
66-497		FUSE(20A)			
99705-1120	1				
66-497B		FUSE(30A)			
99705-1130	1				
66-730		BLOCK,FUSE			
NA01-66-730C	1				
66-732D		COVER,FUSE BLOCK			
NA01-66-731A	1	FURUKAWA			
66-732E		LABEL,CAUTION-FUSE COVER			
NA01-66-732A	1				
66-733A		BREAKER			
H001-66-733	1				
66-740		HOLDER,FUSE			
H001-66-739	1				
67-B71		BRACKET,HARNESS			
NA05-67-BW1B	1	(W/AIR BAG)			
67-B73		BRACKET,HARNESS			
NA05-67-BW2	1	(W/AIR BAG)			
67-B74		BRACKET,HARNESS			
NA05-67-BWDA	1				
67-010A		HARNESS,FRONT			
NA03-67-010D	1	(W/AIR BAG) (AT)			
NA01-67-010J AN(NA01-67-010L)	1				-9701

9701 NA35**-111969

6700 -2 M WIRING HARNESSES(FRONT & REAR)

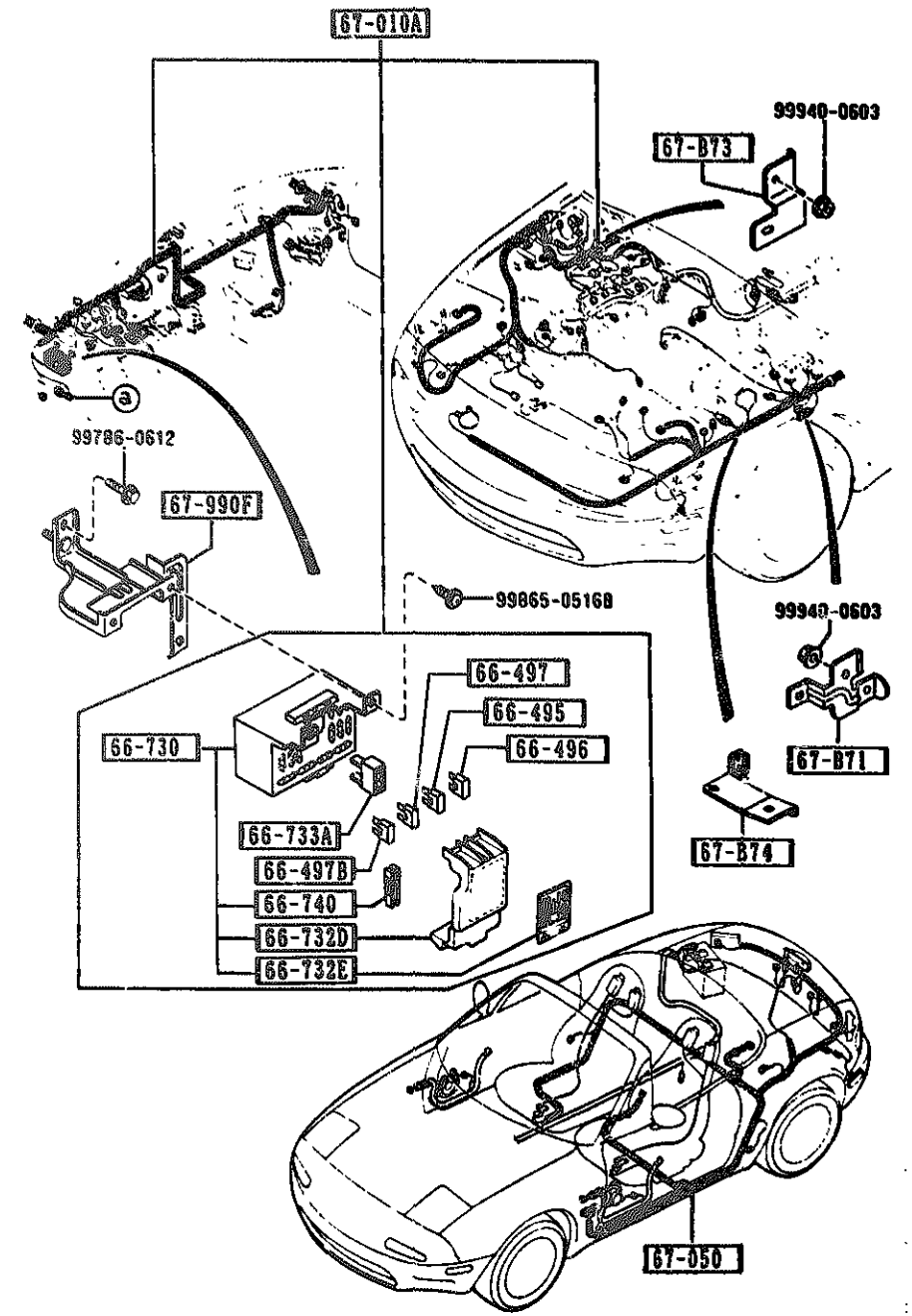

PART NO.	QTY	MODEL/RESTRICTION	MODEL/RESTRICTION	MODEL/RESTRICTION	FROM-TO
CONT'D					
NA02-67-010J AN(NA02-67-010L)	1				-9701
NA01-67-010L	1	BASE, (W/O HEAD SPEAKER) (MT)			9701-9901
NA02-67-010L	1	PKG-OPT, (W/HEAD SPEAKER) (MT)			9701-9901
NA01-67-010U AN(NA01-67-010W)	1				9901-9A01
NA02-67-010U AN(NA02-67-010W)	1				9901-9A01
NA01-67-010W AN(NA04-67-010)	1				9A01-9C01
NA02-67-010W AN(NA05-67-010)	1				9A01-9C01
NA04-67-010 AN(NA04-67-010A)	1				9C01-0401
NA05-67-010 AN(NA05-67-010A)	1				9C01-0401
NA04-67-010A	1	BASE, (W/O HEAD SPEAKER) (MT)			0401-
NA05-67-010A	1	PKG-OPT, (W/HEAD SPEAKER) (MT)			0401-
NA08-67-010	1	(W/O AIR BAG) (MT)			0701-
NA09-67-010D	1	(W/O AIR BAG) (AT)			0701-
67-050		HARNESS,REAR			
NA01-67-050C AN(NA01-67-050D)	1				-9A01
NA02-67-050C AN(NA02-67-050D)	1				-9A01
NA01-67-050D	1	BASE, (W/O HEAD SPEAKER)			9A01-
NA02-67-050D	1	PKG-OPT, (W/HEAD SPEAKER)			9A01-
67-990F		BRACKET,HARNESS			
NA01-67-BJ0	1				

9701 NA35##-111969
9901 NA35##-119257
9A01 NA35##-122908
9C01 NA35##-130310
0401 NA35##-146561
0701 NA35##-200041

6701 -1 WIRING HARNESSES(ENGINE & T/MISSION)

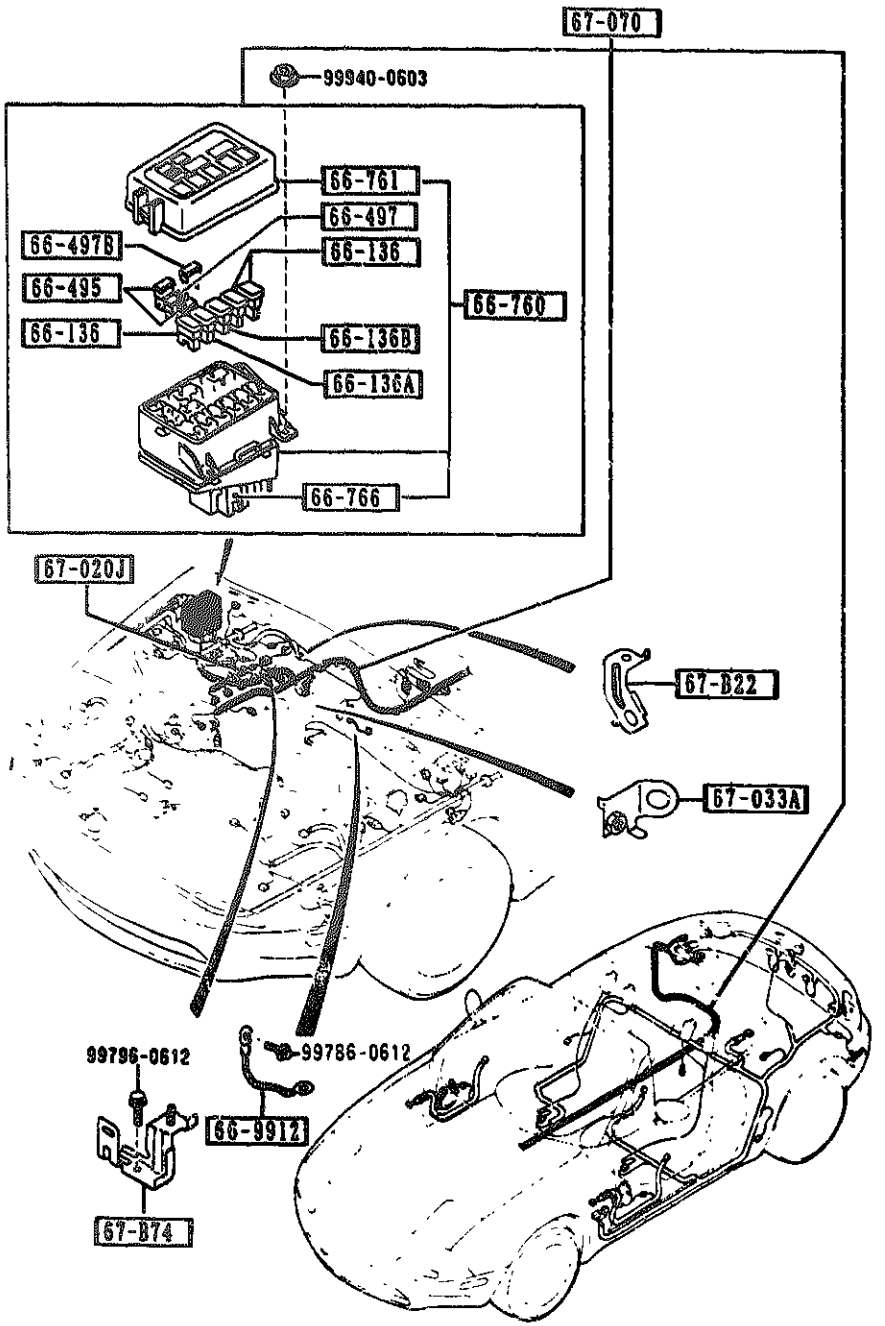

PART NO.	QTY	MODEL/RESTRICTION	MODEL/RESTRICTION	MODEL/RESTRICTION	FROM-TO
66-136		FUSE(30A)			
H115-67-099	3				
66-136A		FUSE(40A)			
H116-67-099	1				
66-136B		FUSE(80A)			
H117-67-099	1				
66-495		FUSE(10A)			
99705-1110	2				
66-497		FUSE(20A)			
99705-1120	1				
66-497B		FUSE(30A)			
99705-1130	1				
66-760		BLOCK,MAIN FUSE			
NA01-66-760B	1				
66-761		COVER,MAIN FUSE BLOK			
NA02-66-762B	1	YAZAKI			
66-766		COVER,UNDER-MAIN FUSE BLK			
B465-66-767	1				9701-
66-9912		WIRE,EARTH			
NA01-67-FW1A AN(NA01-67-EW1B)	1				-9601
NA01-67-EW1B	1				9601-
67-B22		BRACKET,HARNESS			
NA01-67-B20A	1				-9A13
67-B74		BRACKET,HARNESS			
NA01-67-B80A	1				
67-020J		HARNESS,INJECTOR			
NA01-67-080B AN(NA01-67-080C)	1				-9701

9601 NA35##-106797
9701 NA35##-111969
9A13 NA35##-124217

SECTION NAME INDEX (BODY)

LO.NO	SEC.NO	SECTION NAME
2-C05	0900	KEY SETS
2-E05	5000	FRONT BUMPER
2-H05	5010	REAR BUMPER
2-J05	5030	WINDOW MOULDING & COWL GRILLES
2-L05	5100	HEAD LAMPS
2-M05	5103	HEAD LAMP RETRACTORS
2-D06	5105	FRONT COMBINATION LAMPS
2-F06	5110	REAR COMBINATION LAMPS
2-I06	5120	LICENSE LAMPS
2-J06	5180	REAR FINISHER
2-L06	5230	BONNET
2-N06	5260	TRUNK LID
2-D07	5310	BODY PANELS (FRONT)
2-E07	5320	BODY PANELS (FENDER & WHEEL APRON)
2-H07	5330	BODY PANELS (DASH & COWL PANEL)
2-I07	5340	BODY PANELS (SIDE)
2-C08	5370	BODY PANELS (FLOOR)
2-F08	5380	FLOOR ATTACHMENTS (HOLE COVERS)
2-G08	5390	FLOOR ATTACHMENTS
2-C09	5500	DASHBOARD EQUIPMENTS
2-E09	5520	METER HOOD
2-F09	5530	SPEEDOMETER CABLE
2-G09	5540	METER COMPONENTS
2-I09	5560	DASHBOARD & RELATED PARTS
2-L09	5570	CONSOLE
2-C10	5580	VENTILATOR
2-D10	5700	SEATS
2-K10	5790	SEAT BELTS
2-L10	5800	FRONT DOORS
2-C11	5830	FRONT DOOR MECHANISMS
2-F11	5840	FRONT DOOR TRIMS & RELATED PARTS
2-C12	6100	HEATER
2-D12	6110	HEATER UNIT COMPONENTS
2-E12	6115	HEATER CONTROLS COMPONENTS
2-F12	6120	HEATER BLOWER COMPONENTS
2-G12	6130	AIR CONDITIONER
2-K12	6135	O RING SET,PIPING
2-L12	6140	COMPRESSOR COMPONENTS (AIR CONDITIONER)
2-N12	6150	COOLING UNIT (AIR CONDITIONER)
2-C13	6300	WINDOW GLASSES
2-D13	6330	SUNROOF
2-M13	6600	SWITCHES & RELAYS (ENGINE)
2-D14	6610	DASHBOARD SWITCHES
2-E14	6611	COMBINATION SWITCH
2-F14	6630	RELAYS & UNIT (BODY)
2-G14	6635	DOOR SWITCH & HORNS
2-H14	6640	AUTO CRUISE CONTROL SYSTEM
2-I14	6680	AUDIO SYSTEMS (RADIO & TAPE DECK)
2-K14	6682	AUDIO SYSTEMS (ANTENNA & SPEAKER)
2-L14	6700	WIRING HARNESSES(FRONT & REAR)
2-N14	6701	WIRING HARNESSES(ENGINE & T/MISSION)
2-D15	6702	WIRING HARNESSES(DASHBOARD)
2-E15	6703	WIRING HARNESSES(DOOR,FLOOR/CEILING)
2-F15	6704	WIRING HARNESS CLAMPS
2-I15	6720	WINDSHIELD WASHER
2-K15	6730	WINDSHIELD WIPERS
2-M15	6740	WIPER MOTOR COMPONENTS(FRONT)
2-N15	6820	FRONT HEADER TRIM & PILLAR TRIMS
2-C16	6840	TRIMS & SCUFF PLATES
2-E16	6860	FLOOR MATS & PADS
2-G16	6870	SERVICE TOOLS
2-H16	6900	VISORS,ASSIST HANDLES & MIRRORS
2-J16	6930	CAUTION PLATES & LABELS
2-L16	7250	QUARTER WINDOW & TRIMS
3-C03	7900	ACCESSORIES



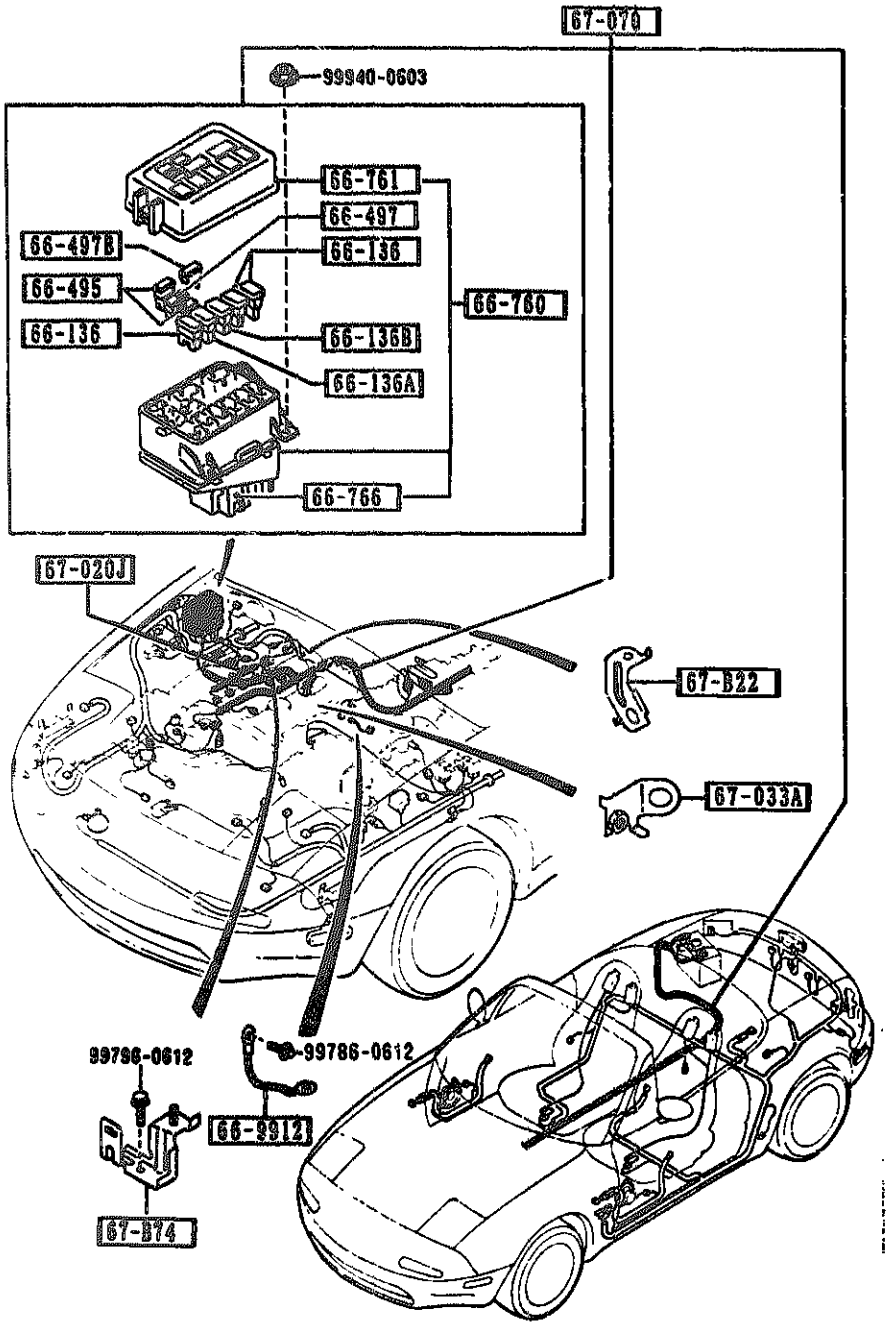

PART NO.	QTY	MODEL/RESTRICTION	MODEL/RESTRICTION	MODEL/RESTRICTION	FROM-TO
CONT'D NA01-67-080C	1				9701-
+----------+ | 67-033A |		BRACKET,WIRING			
+----------+ NA01-67-B10B	1				
+----------+ | 67-070 |		HARNESS,ENGINE			
+----------+ NA03-67-070C	1	(W/AIR BAG) (AT)			
NA01-67-070F AN(NA01-67-070H)	1				-9701
NA01-67-070H AN(NA01-67-070J)	1				9701-9801
NA01-67-070J	1	(W/AIR BAG) (MT)			9801-
NA07-67-070J	1	(W/O AIR BAG) (MT)			0701-
NA09-67-070C	1	(W/O AIR BAG) (AT)			0701-

9701 NA35##-111969
9801 NA35##-116316
0701 NA35##-200041

6702 -1 M WIRING HARNESSES(DASHBOARD)

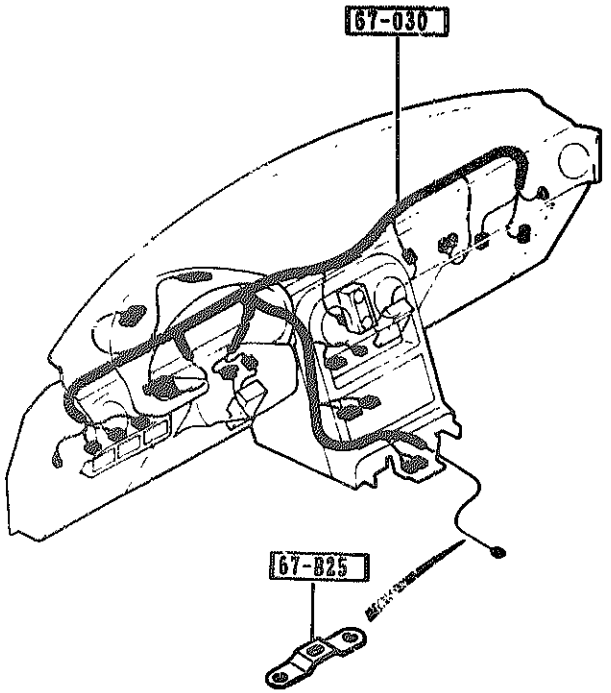

PART NO.	QTY	MODEL/RESTRICTION	MODEL/RESTRICTION	MODEL/RESTRICTION	FROM-TO
67-825		BRACKET,HARNESS			
NA01-67-831	1	(MT)			
67-030		HARNESS,INSTRUMENT			
NA03-67-030C	1	(AT)			
NA01-67-030D A (NA01-67-030H)	1				-9701
NA02-67-030D A (NA02-67-030H)	1				-9701
NA01-67-030H AN(NA01-67-030K)	1				9701-9A01
NA02-67-030H AN(NA02-67-030K)	1				9701-9A01
NA01-67-030K	1	BASE, (W/O HEAD SPEAKER) (MT)			9A01-
NA02-67-030K	1	PKG-OPT, (W/HEAD SPEAKER) (MT)			9A01-

9701 NA3[illegible]-111969
9A01 NA3[illegible]-122998

6703 -1 ■ WIRING HARNESSES(DOOR,FLOOR/CEILING)

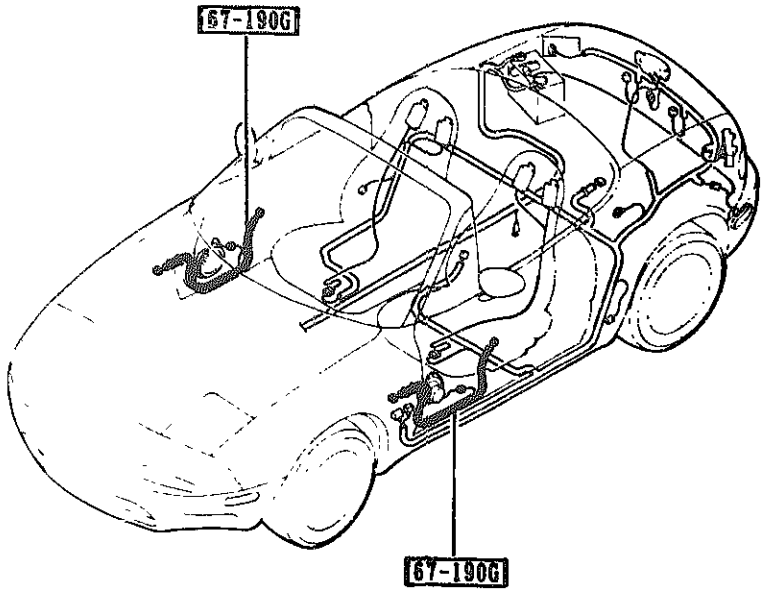

PART NO.	QTY	MODEL/RESTRICTION	MODEL/RESTRICTION	MODEL/RESTRICTION	FROM-TO
67-190G		HARNESS,DOOR			
NA01-67-190 AN(NA01-67-190A)	2				-9701
NA02-67-190 AN(NA02-67-190A)	2				-9701
NA01-67-190A	2	PKG-OPT, (W/O POWER WIND,W/AUDIO)			9701-
NA02-67-190A	2	PKG-OPT, V-SPECIAL, (W/POWER WIND)			9701-

9701 NA35##-111969

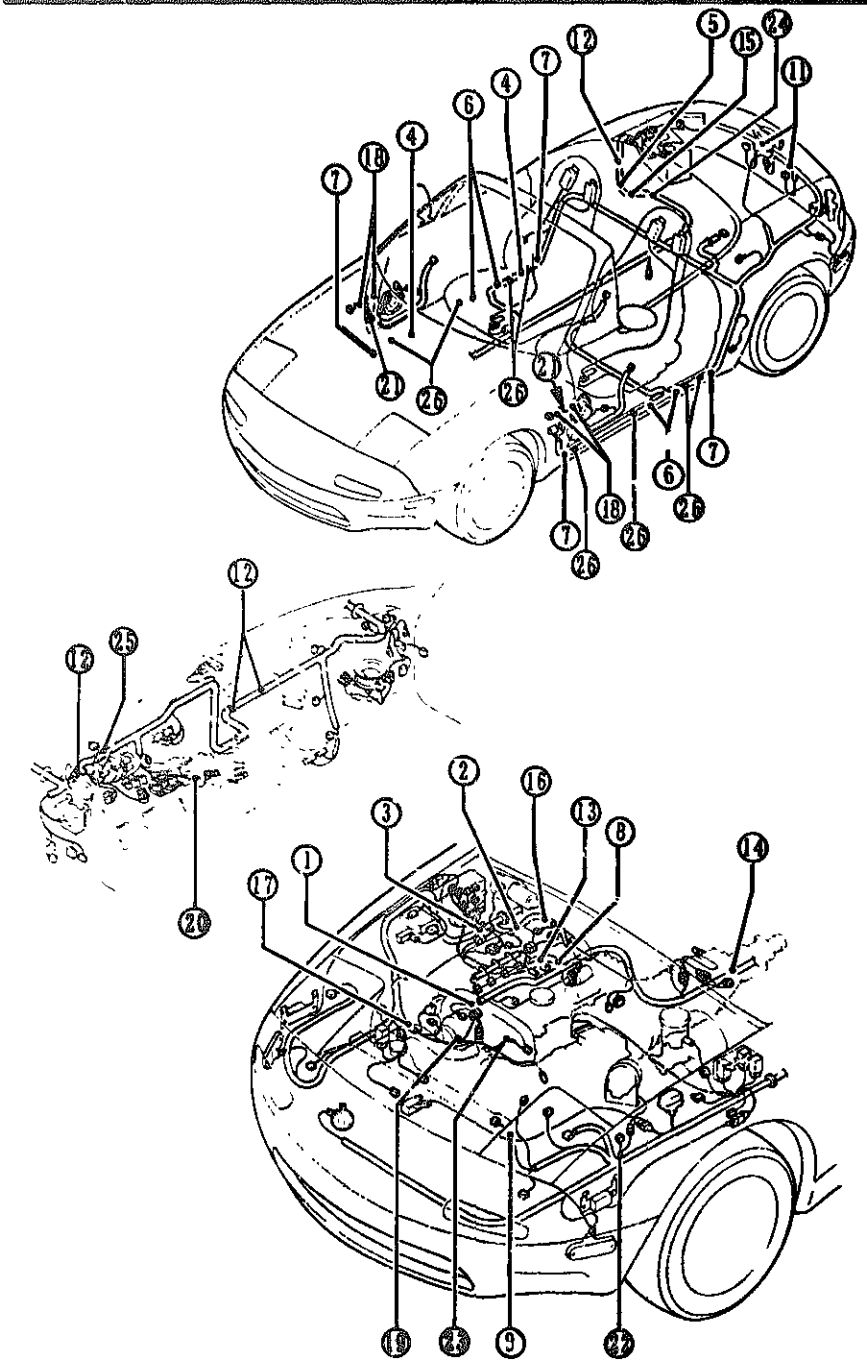

① 18-996A	② 67-CS1	③ 67-013A	④ 67-013D	⑤ 67-014F	⑥ 67-022
	99786-5612			99786-0620	
⑦ 67-026	⑧ 67-048A	⑨ 67-051E	⑩	⑪ 67-051J	⑫ 67-052H
	99786-0612				
⑬ 67-062B	⑭ 67-073	⑮ 67-073A	⑯ 67-073B	⑰ 67-074	⑱ 67-191
99786-0612	90845-0612		99940-0603	99786-0612	
⑲ 83-447C	⑳ 14-726	㉑ 45-961B	㉒ 67-CT2	㉓ 67-011C	㉔ 67-072H
					99786-0620
㉕ 67-076	㉖ 68-865				

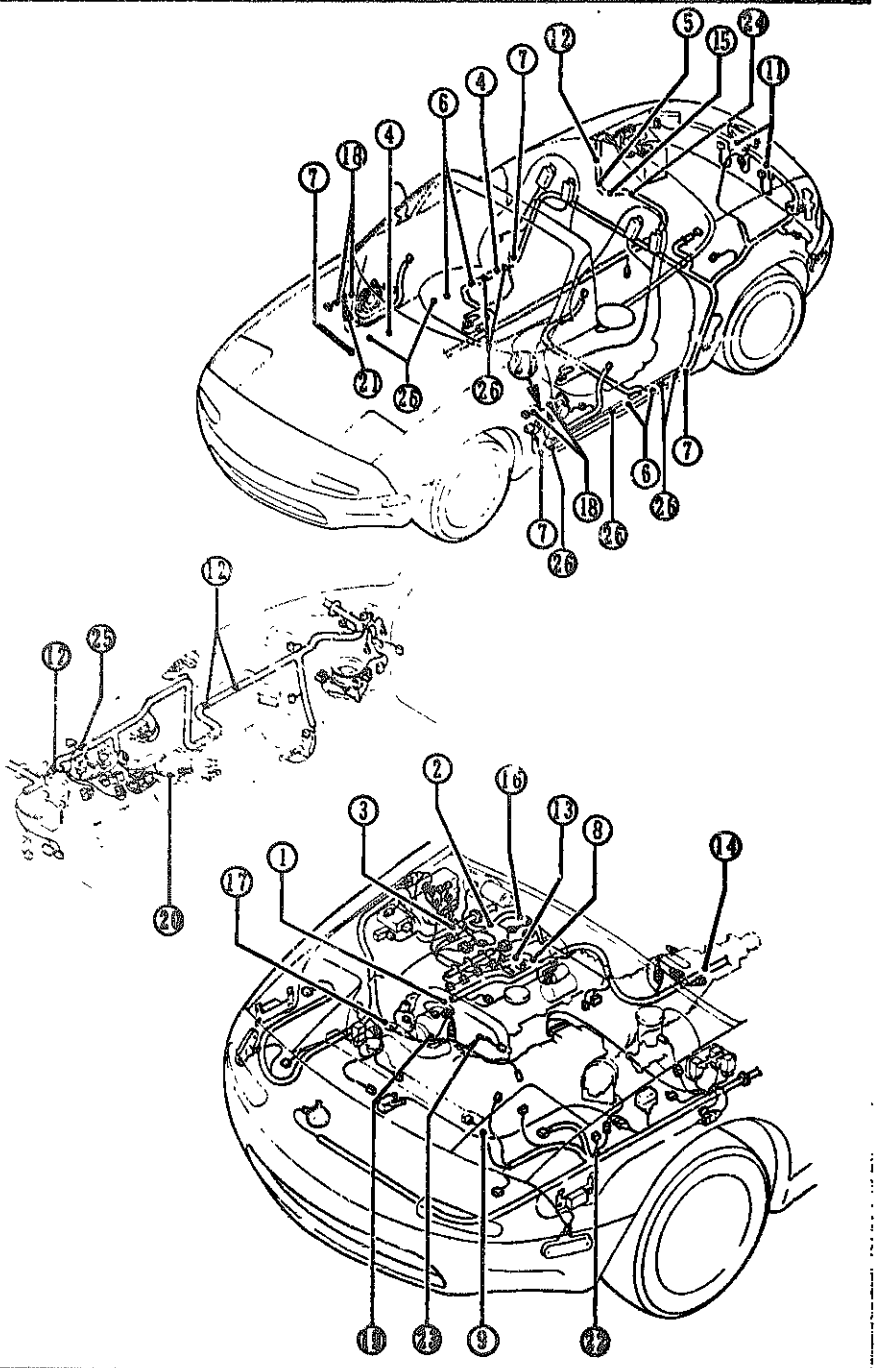

PART NO.	QTY	MODEL/RESTRICTION	MODEL/RESTRICTION	MODEL/RESTRICTION	FROM-TO
13-447C		CLAMP,HOSE			
B61P-13-447	1				-9701
14-726		BAND			
N304-14-726	1				
18-996A		CLIP			
BF67-67-996	1				
45-961B		CAP			
H002-45-961	2				9601-
67-CS1		CLIP,HARNESS			
N001-67-CS1B AN(N001-67-CS1C)	1				-9601
N001-67-CS1C	1				9601-
67-CT2		CLIP,HARNESS			
NA01-67-CH5	1				
67-011C		CLIP			
E356-18-141	1				9701-
67-013A		CLIP			
UB42-67-013	1				
67-013D		PROTECTOR,HARNESS			
NA01-67-P54	3				
67-014F		PROTECTOR,HARNESS			
NA01-67-P71	1				
67-022		CLIP,HARNESS			
NA01-67-CW5A	4				
67-026		CLIP,HARNESS			
NA02-67-CW5A	4				
67-048A		CLIP,HARNESS			
NA01-67-CS1	1				

9401 NA35MM-100090
9601 NA35MM-106797
9701 NA35MM-111969

2 G15

6704 WIRING HARNESS CLAMPS (2/2)

(THIS ILLUSTRATION CONSISTS OF 2 PAGES)

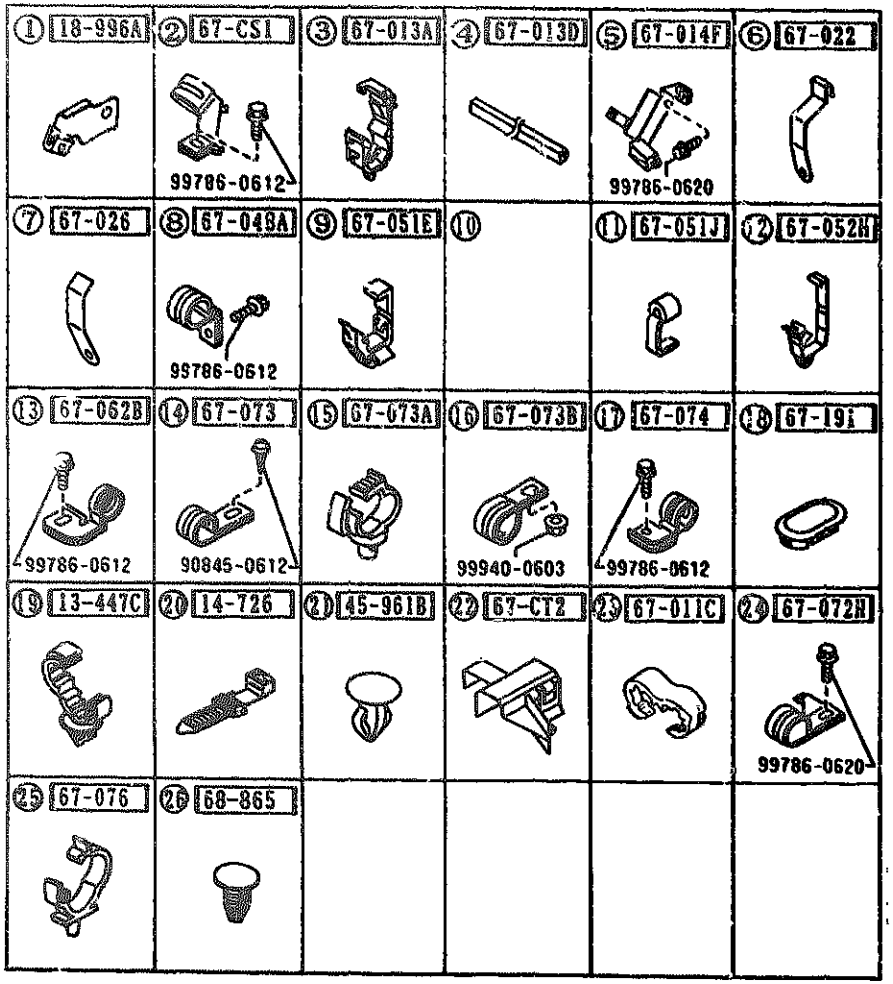

PART NO.	QTY	MODEL/RESTRICTION	MODEL/RESTRICTION	MODEL/RESTRICTION	FROM-TO
67-051E		CLIP			
UB42-67-051	1				
67-051J		CLIP			
GD31-67-051A	2				
67-052H		CLIP			
G030-67-018A	4				-9701
G030-67-018A	3				9701-
67-062B		CLIP,HARNESS			
NA02-67-CS1A	1				
67-072H		CLIP,ENGINE HARNESS			
NA01-67-CS6	1				
67-073		CLIP			
UB73-67-073A	1				
67-073A		CLIP			
NA01-67-CH7	1				
67-073B		CLIP			
H261-67-073	1				
67-074		CLIP,HARNESS			
NA01-67-CS5	1				
67-076		CLIP,ENGINE HARNESS			
NA01-67-CH8	1				
67-191		GROMMET			
8300-67-HD1	4				
68-865		FASTENER			
8003-68-865	8				
00		NA0 BLACK			
81		NA1 BEIGE			

9701 NA35MM-111969

6720 WINDSHIELD WASHER

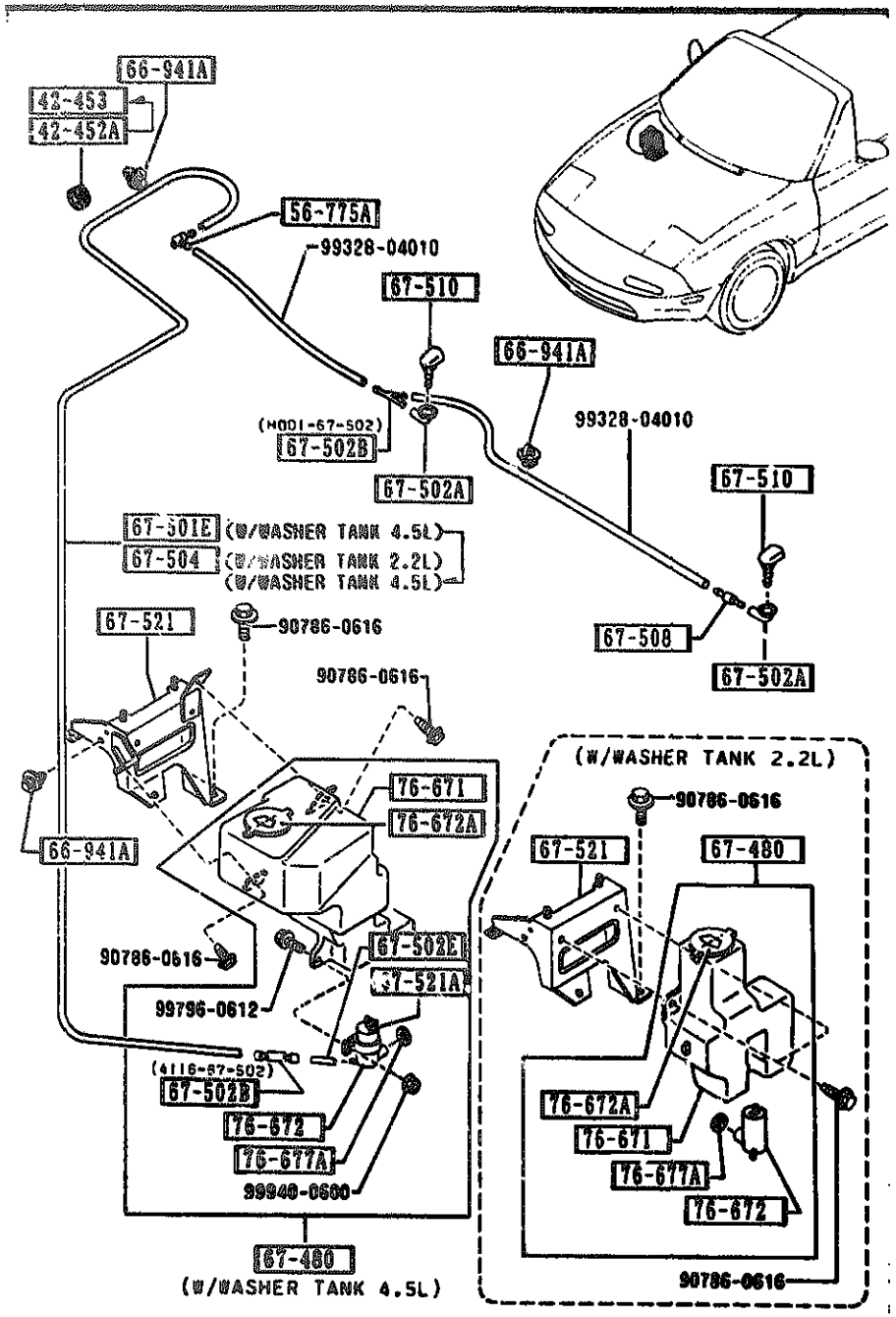

PART NO.	QTY	MODEL/RESTRICTION	MODEL/RESTRICTION	MODEL/RESTRICTION	FROM-TO
42-452A		GROMMET			
0111-41-692	1				-0904
42-453		PROTECTOR,CABLE			
B048-42-453	1				0904-
56-775A		CLIP,WASHER HOSE			
LA01-67-505A	1				
66-941A		CLIP			
GB08-66-941	4				
67-480		TANK,WASHER-FRONT			
NA01-67-480	1	BASE, (W/WASHER TANK 2.2L)			
NA04-67-480A	1	PKG-OPT, (W/WASHER TANK 4.5L)			
67-501E		PIPE,NOZZLE-FRONT WASHER			
NA04-67-501A AN(NA01-67-501A)	1				-9601
67-502A		JOINT,HOSE			
NA01-67-502	2				
67-502B		JOINT,HOSE			
H001-67-502	1				
4116-67-502	1	PKG-OPT, (W/WASHER TANK 4.5L)			
67-502E		JOINT,ELBOW-W.TANK			
S084-67-502	1	PKG-OPT, (W/WASHER TANK 4.5L)			
67-504		HOSE'C',WASHER			
NA01-67-501A	1				9601-
67-508		VALVE,CHECK			
FA54-67-508	1				

9601 NA35##-106797
0904 NA35##-209115

AUNA01

CAT. AUNA01-07

1992-02

6720 -2 # WINDSHIELD WASHER

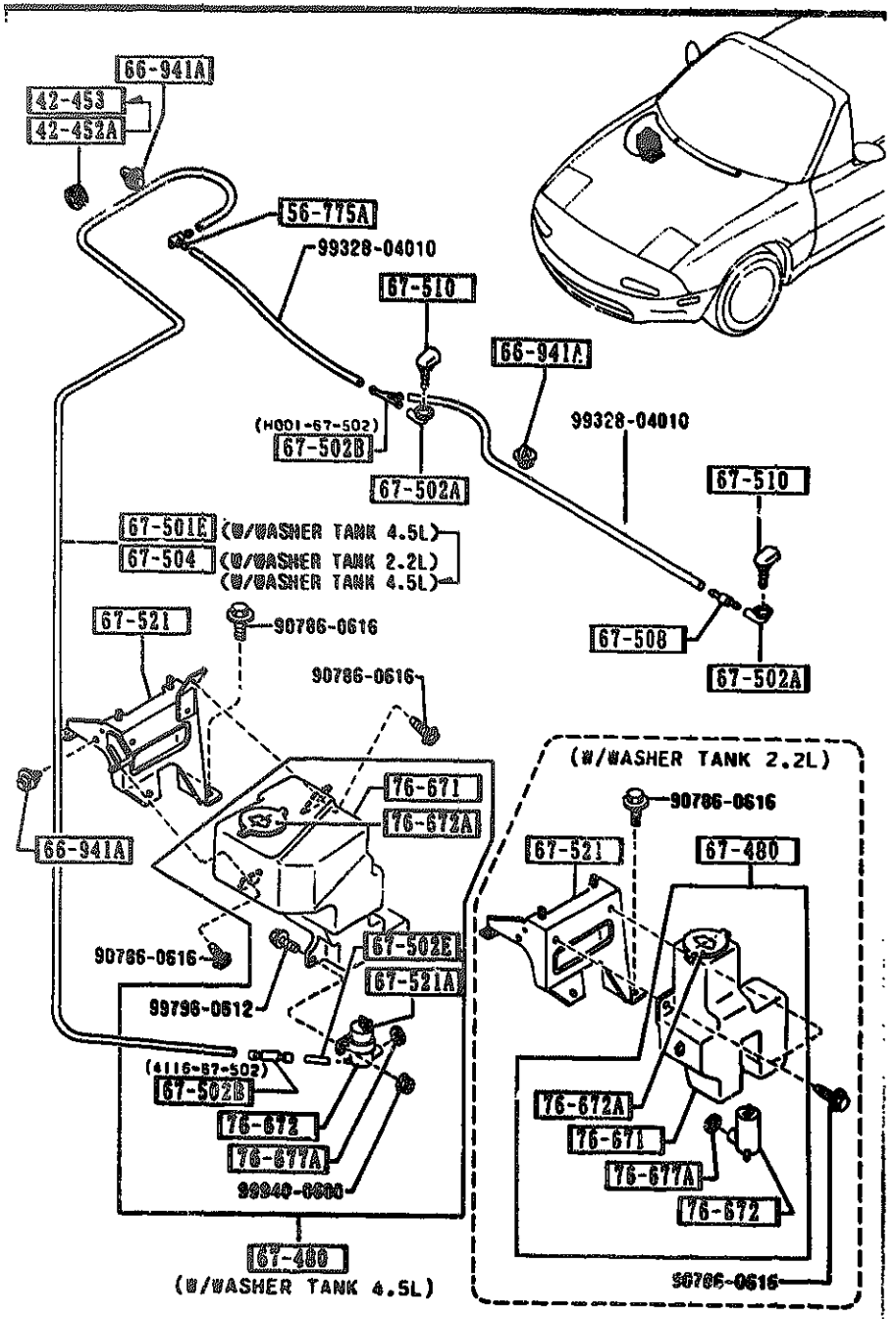

PART NO.	QTY	MODEL/RESTRICTION	MODEL/RESTRICTION	MODEL/RESTRICTION	FROM-TO
67-510		NOZZLE,WASHER-F,WIND			
NA01-67-510	2				
67-521		BRACKET,WASHER TANK			
NA01-67-520	1	BASE, (W/WASHER TANK 2.2L)			
NA04-67-520	1	PKG-OPT, (W/WASHER TANK 4.5L)			
67-521A		BRACKET			
S095-67-521	1	PKG-OPT, (W/WASHER TANK 4.5L)			
76-671		TANK,WASHER			
NA01-67-481	1	BASE, (W/WASHER TANK 2.2L)			
NA04-67-481	1	PKG-OPT, (W/WASHER TANK 4.5L)			
76-672		PUMP,WASHER			
S084-76-672	1				
76-672A		CAP,TANK			
UB39-51-815	1				
76-677A		GROMMET,WASHER TANK			
S084-76-677	1				

6730 WINDSHIELD WIPERS

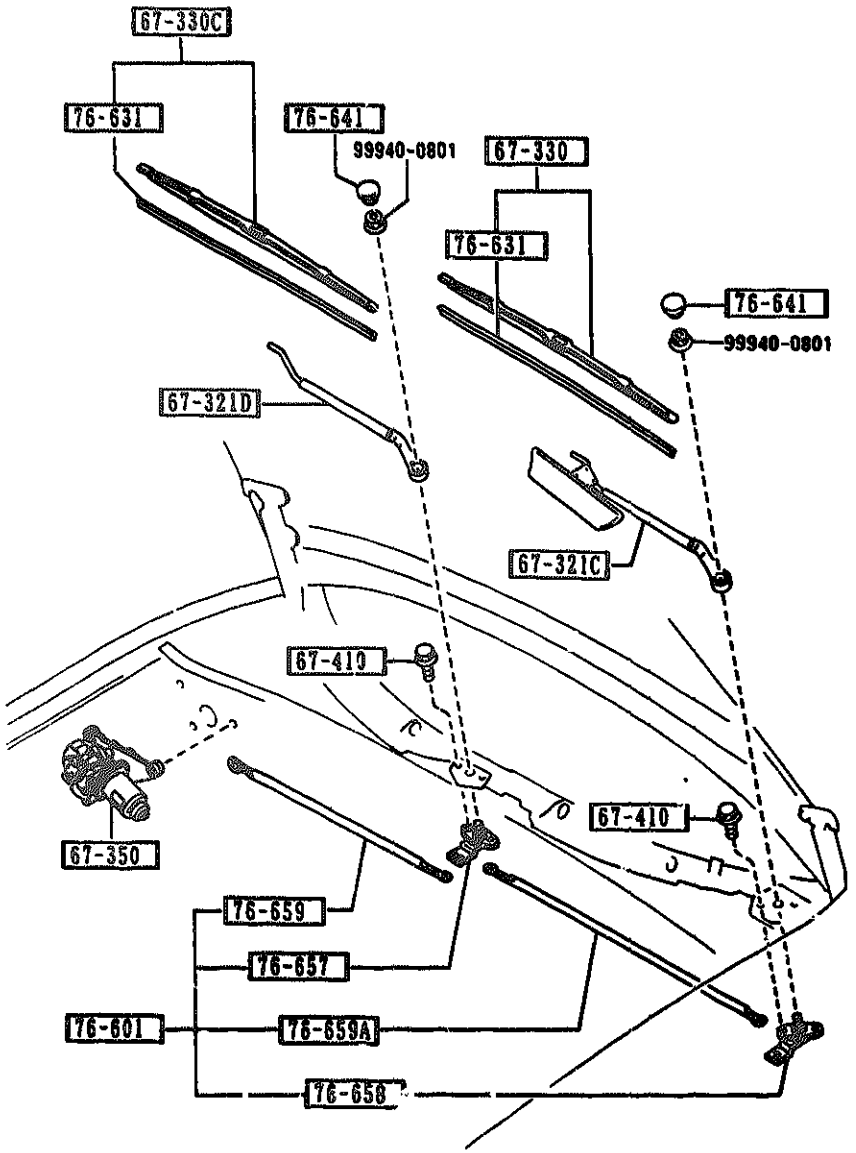

PART NO.	QTY	MODEL/RESTRICTION	MODEL/RESTRICTION	MODEL/RESTRICTION	FROM-TO
67-321C		ARM,WIPER-DRIVER SIDE			
NA01-67-321	1				
67-321D		ARM,WIPER-CO DRIVER SIDE			
NA02-67-321	1				
67-330		BLADE,WIPER-FRONT			
BM90-67-330 A (BM90-67-330A)	1				-9A01
BM90-67-330A	1				9A01-
67-330C		BLADE(R),WIPER-FRONT			
BR71-67-330	1				-9A01
NA02-67-330	1				9A01-
67-350		MOTOR,WIPER			
NA01-67-340A	1	(EXC.COLD SPEC.)			-0701
NA04-67-340	1	(COLD SPEC.)			-0701
NA01-67-340B	1	(EXC.COLD SPEC.)			0701-
NA04-67-340A	1	(W/AIR BAG+COLD SPEC.)			0701-
NA12-67-340A	1	(W/O AIR BAG+COLD SPEC.)			0701-
67-410		BOLT			
8455-67-369	4				
76-601		LINK,WIPER			
NA01-67-360A	1				
76-631		RUBBER,BLADE-FRONT			
BM90-67-331 A (BM90-67-331A)	1				-9A01
KA02-67-331A	1	(PASSENGER SIDE)			-9A01
BM90-67-331A	1	(DRIVER SIDE)			9A01-
NA02-67-331	1	(PASSENGER SIDE)			9A01-
76-641		COVER,WIPER ARM-FRONT			
LA01-67-395 A (LA01-67-395A)	2				-9601
LA01-67-395A	2				9601-

9601 NA35##-106797
9A01 NA35##-122908
0701 NA35##-200041

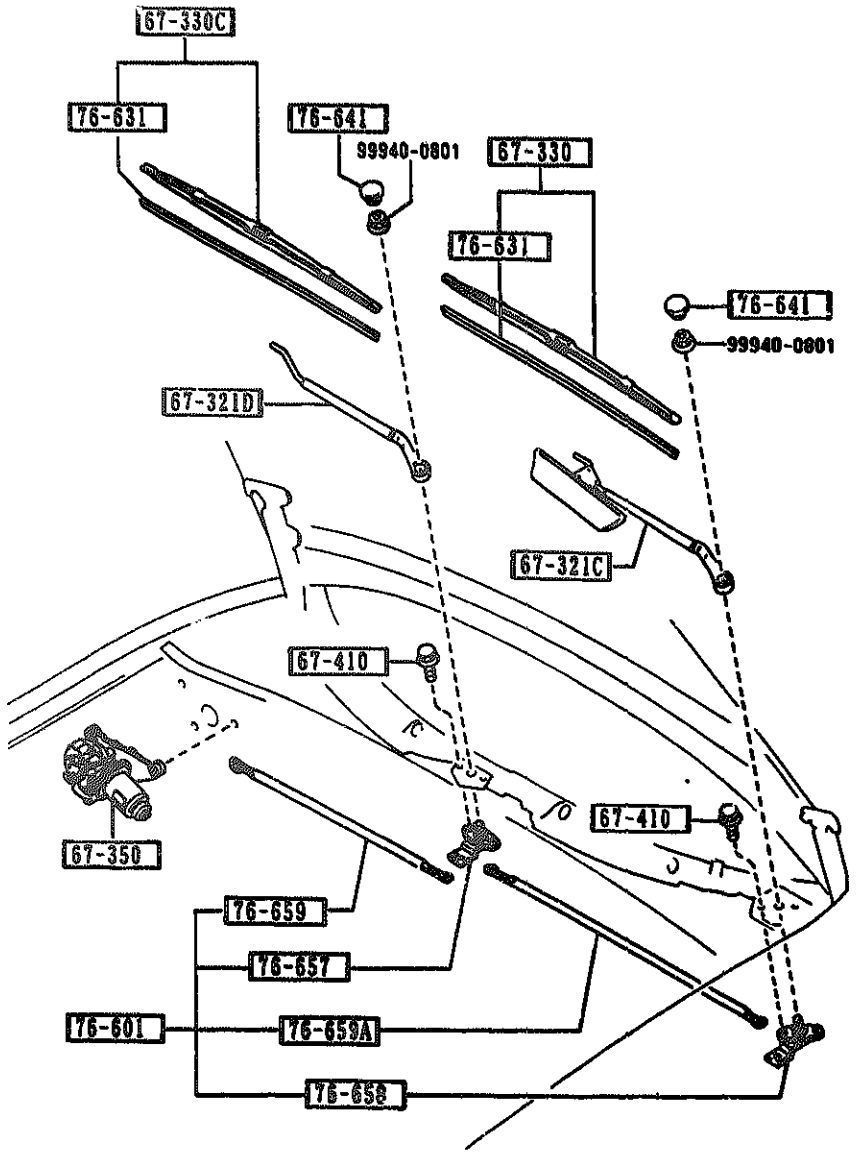

PART NO.	QTY	MODEL/RESTRICTION	MODEL/RESTRICTION	MODEL/RESTRICTION	FROM-TO
76-657		SHAFT,DRIVE NO.1			
NA01-67-363	1				
76-658		SHAFT,DRIVE NO.2			
NA01-67-364	1				
76-659		ARM NO.1,LINK			
NA01-67-361	1				
76-659A		ARM NO.2,LINK			
NA01-67-362	1				

6740 WIPER MOTOR COMPONENTS(FRONT)

COMPONENTS OF NA01-67-340B
NA04-67-340A
NA12-67-340A

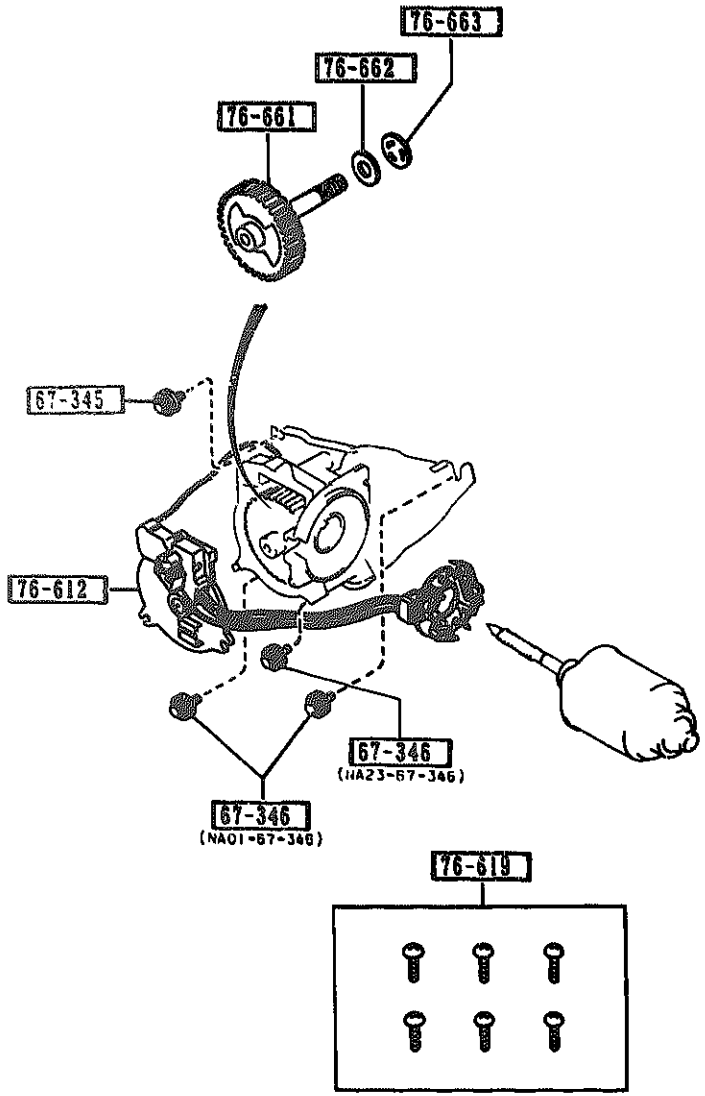

PART NO.	QTY	MODEL/RESTRICTION	MODEL/RESTRICTION	MODEL/RESTRICTION	FROM-TO
67-345		SCREW,EARTH SET-MOTOR BRK			
NA01-67-345	1				
67-346		SCREW,BRACKET-WIPER MOTOR			
NA01-67-346	2				
NA23-67-346	1				0701-
76-612		PLATE,HOLDER-BRUSH			
NA01-67-351	1	(EXC.COLD SPEC.)			-0701
NA04-67-351	1	(COLD SPEC.)			-0701
NA17-67-351	1	(W/O AIR BAG+COLD SPEC.)			0701-
NA23-67-351	1	(EXC.COLD SPEC.)			0701-
NA26-67-351	1	(W/AIR BAG+COLD SPEC.)			0701-
76-619		PARTS SET			
H043-76-619A	1				
76-661		GEAR,SHAFT			
B455-67-354	1	(EXC.COLD SPEC.)			-9801
NA04-67-354	1	(COLD SPEC.)			-9801
B455-67-354	1				9801-0701
GJ21-67-354	1	(W/O AIR BAG+COLD SPEC.)			0701-
NA23-67-354	1	(EXC.COLD SPEC.) (W/AIR BAG+COLD SPEC.)			0701-
76-662		WASHER			
B094-76-662	1				
76-663		WASHER,TOOTHED			
B094-76-663	1				

9801 NA35##-116316
0701 NA35##-200041

6820 -1 M FRONT HEADER TRIM & PILLAR TRIMS

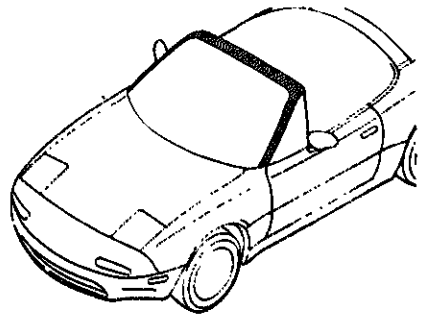

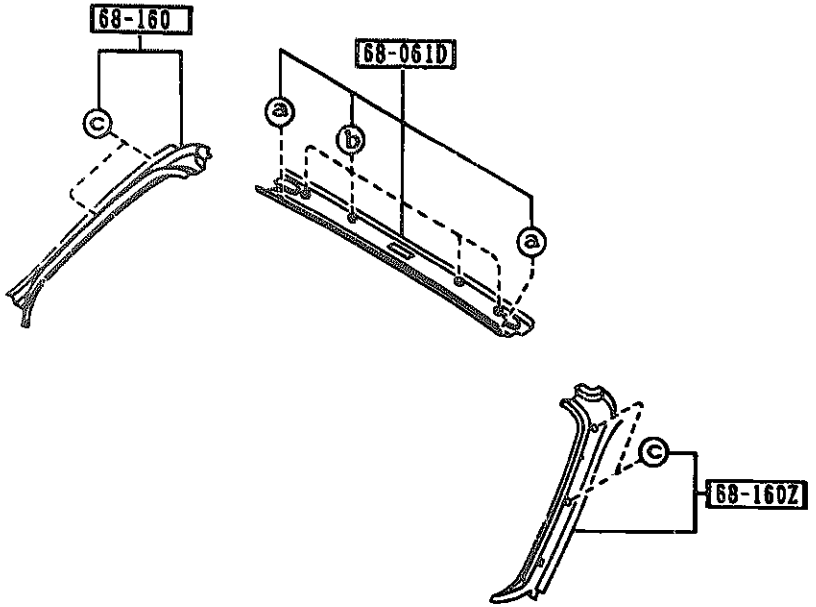

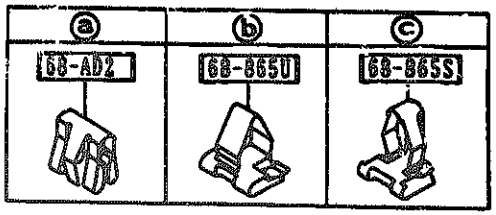

PART NO.	QTY	MODEL/RESTRICTION	MODEL/RESTRICTION	MODEL/RESTRICTION	FROM-TO
68-AD2		CLIP			
B455-68-AD2	2				
68-061D		TRIM,FRONT HEADER			
NA01-68-090	1				-9330
00		NA0 BLACK			
NA01-68-090A	1				9330-
00		NA0 BLACK			
68-160		TRIM(R),'A'PILLAR			
NA01-68-160	1				
00		NA0 BLACK			
68-160Z		TRIM(L),'A'PILLAR			
NA01-68-170	1				
00		NA0 BLACK			
68-865S		CLIP,TRIM			
GJ12-68-865	4				
68-865U		CLIP,TRIM			
GJ11-68-865	4				

9336 NA35**-100072

SECTION NAME INDEX (BODY)

LO.NO	SEC.NO	SECTION NAME
2-C05	0900	KEY SETS
2-E05	5000	FRONT BUMPER
2-H05	5010	REAR BUMPER
2-J05	5030	WINDOW MOULDING & COWL GRILLES
2-L05	5100	HEAD LAMPS
2-M05	5103	HEAD LAMP RETRACTORS
2-D06	5105	FRONT COMBINATION LAMPS
2-F06	5110	REAR COMBINATION LAMPS
2-I06	5120	LICENSE LAMPS
2-J06	5180	REAR FINISHER
2-L06	5230	BONNET
2-N06	5260	TRUNK LID
2-D07	5310	BODY PANELS (FRONT)
2-E07	5320	BODY PANELS (FENDER & WHEEL APRON)
2-H07	5330	BODY PANELS (DASH & COWL PANEL)
2-I07	5340	BODY PANELS (SIDE)
2-C08	5370	BODY PANELS (FLOOR)
2-F08	5380	FLOOR ATTACHMENTS (HOLE COVERS)
2-G08	5390	FLOOR ATTACHMENTS
2-C09	5500	DASHBOARD EQUIPMENTS
2-E09	5520	METER HOOD
2-F09	5530	SPEEDOMETER CABLE
2-G09	5540	METER COMPONENTS
2-I09	5560	DASHBOARD & RELATED PARTS
2-L09	5570	CONSOLE
2-C10	5580	VENTILATOR
2-D10	5700	SEATS
2-K10	5790	SEAT BELTS
2-L10	5800	FRONT DOORS
2-C11	5830	FRONT DOOR MECHANISMS
2-F11	5840	FRONT DOOR TRIMS & RELATED PARTS
2-C12	6100	HEATER
2-D12	6110	HEATER UNIT COMPONENTS
2-E12	6115	HEATER CONTROLS COMPONENTS
2-F12	6120	HEATER BLOWER COMPONENTS
2-G12	6130	AIR CONDITIONER
2-K12	6135	O RING SET,PIPING
2-L12	6140	COMPRESSOR COMPONENTS (AIR CONDITIONER)
2-M12	6150	COOLING UNIT (AIR CONDITIONER)
2-C13	6300	WINDOW GLASSES
2-D13	6330	SUNROOF
2-M13	6600	SWITCHES & RELAYS (ENGINE)
2-D14	6610	DASHBOARD SWITCHES
2-E14	6611	COMBINATION SWITCH
2-F14	6630	RELAYS & UNIT (BODY)
2-G14	6635	DOOR SWITCH & HORNS
2-H14	6640	AUTO CRUISE CONTROL SYSTEM
2-I14	6680	AUDIO SYSTEMS (RADIO & TAPE DECK)
2-K14	6682	AUDIO SYSTEMS (ANTENNA & SPEAKER)
2-L14	6700	WIRING HARNESSES(FRONT & REAR)
2-N14	6701	WIRING HARNESSES(ENGINE & T/MISSION)
2-D15	6702	WIRING HARNESSES(DASHBOARD)
2-E15	6703	WIRING HARNESSES(DOOR,FLOOR/CEILING)
2-F15	6704	WIRING HARNESS CLAMPS
2-I15	6720	WINDSHIELD WASHER
2-K15	6730	WINDSHIELD WIPERS
2-M15	6740	WIPER MOTOR COMPONENTS(FRONT)
2-N15	6820	FRONT HEADER TRIM & PILLAR TRIMS
2-C16	6840	TRIMS & SCUFF PLATES
2-E16	6860	FLOOR MATS & PADS
2-G16	6870	SERVICE TOOLS
2-H16	6900	VISORS,ASSIST HANDLES & MIRRORS
2-J16	6930	CAUTION PLATES & LABELS
2-L16	7250	QUARTER WINDOW & TRIMS
3-C03	7900	ACCESSORIES



6840 -1 TRIMS & SCUFF PLATES

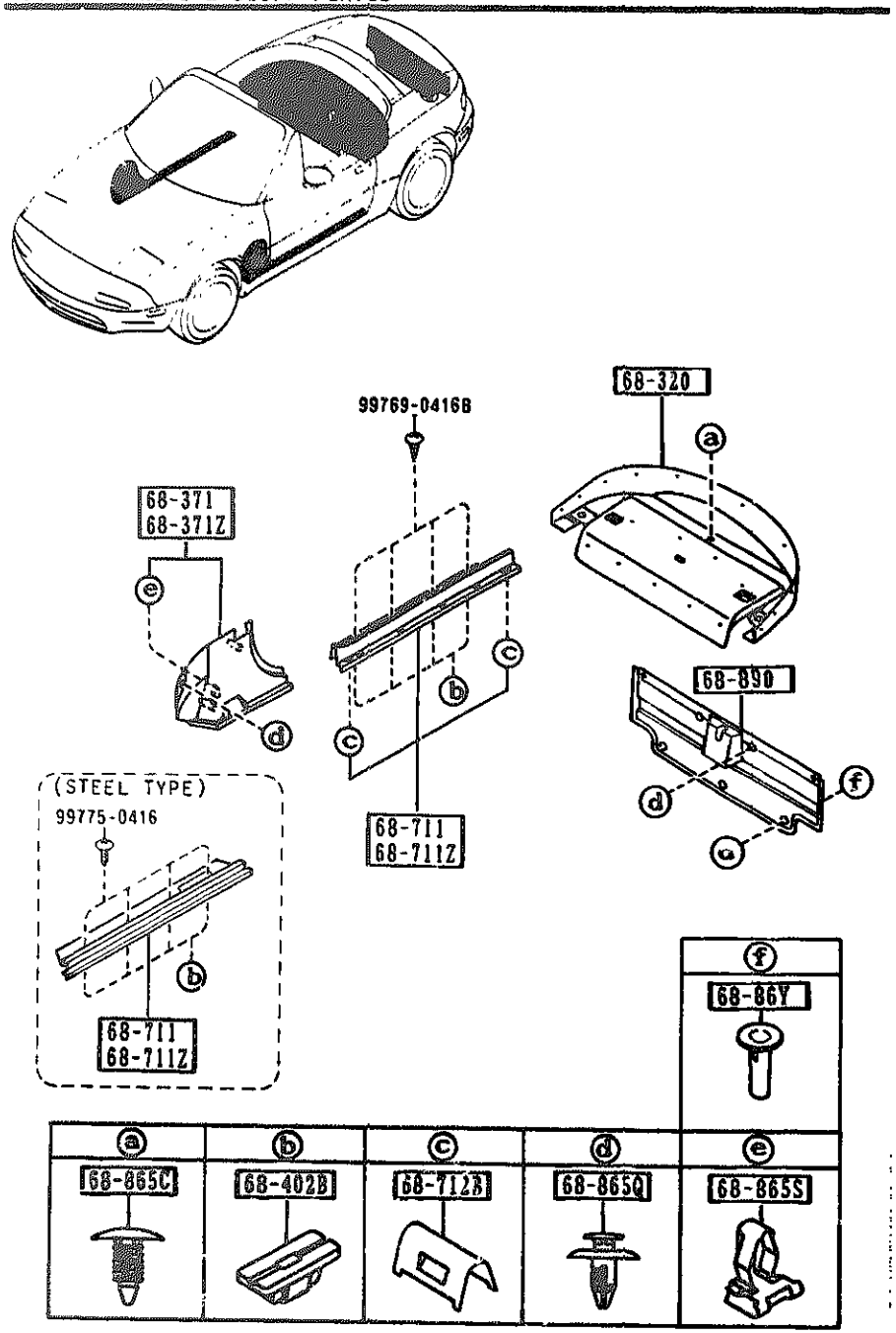

PART NO.	QTY	MODEL/RESTRICTION	MODEL/RESTRICTION	MODEL/RESTRICTION	FROM-TO
68-320		TRAY,REAR PACKAGE			
NA01-68-3F18	1				
00		NAO BLACK			
68-371		TRIM(R),FRONT SIDE			
NA01-68-370	1				
00		NAO BLACK			
68-371Z		TRIM(L),FRONT SIDE			
NA01-68-390	1				
00		NAO BLACK			
68-402B		GROMMET,SCREW			
FA54-68-7190	8				
68-711		PLATE(R),FRONT SCUFF			
NA01-68-710	1	BASE, (PLASTIC TYPE)			
00		NAO BLACK			
68-711Z		PLATE(L),FRONT SCUFF			
NA01-68-720	1	BASE, (PLASTIC TYPE)			
00		NAO BLACK			
68-712B		CLIP			
B235-68-712	4	BASE, (PLASTIC TYPE)			
68-86Y		CAP,SEAL-TRUNK END TRIM			
KA01-68-86Y	3				
68-865C		FASTENER			
G032-68-865A	20				
00		NAO BLACK			
68-8650		FASTENER			
GJ21-68-865A	9				-9526
AN(GJ21-68-8650)					
00		NAO BLACK			
GJ21-68-865B	9				9526-

9526 NA35##-105742

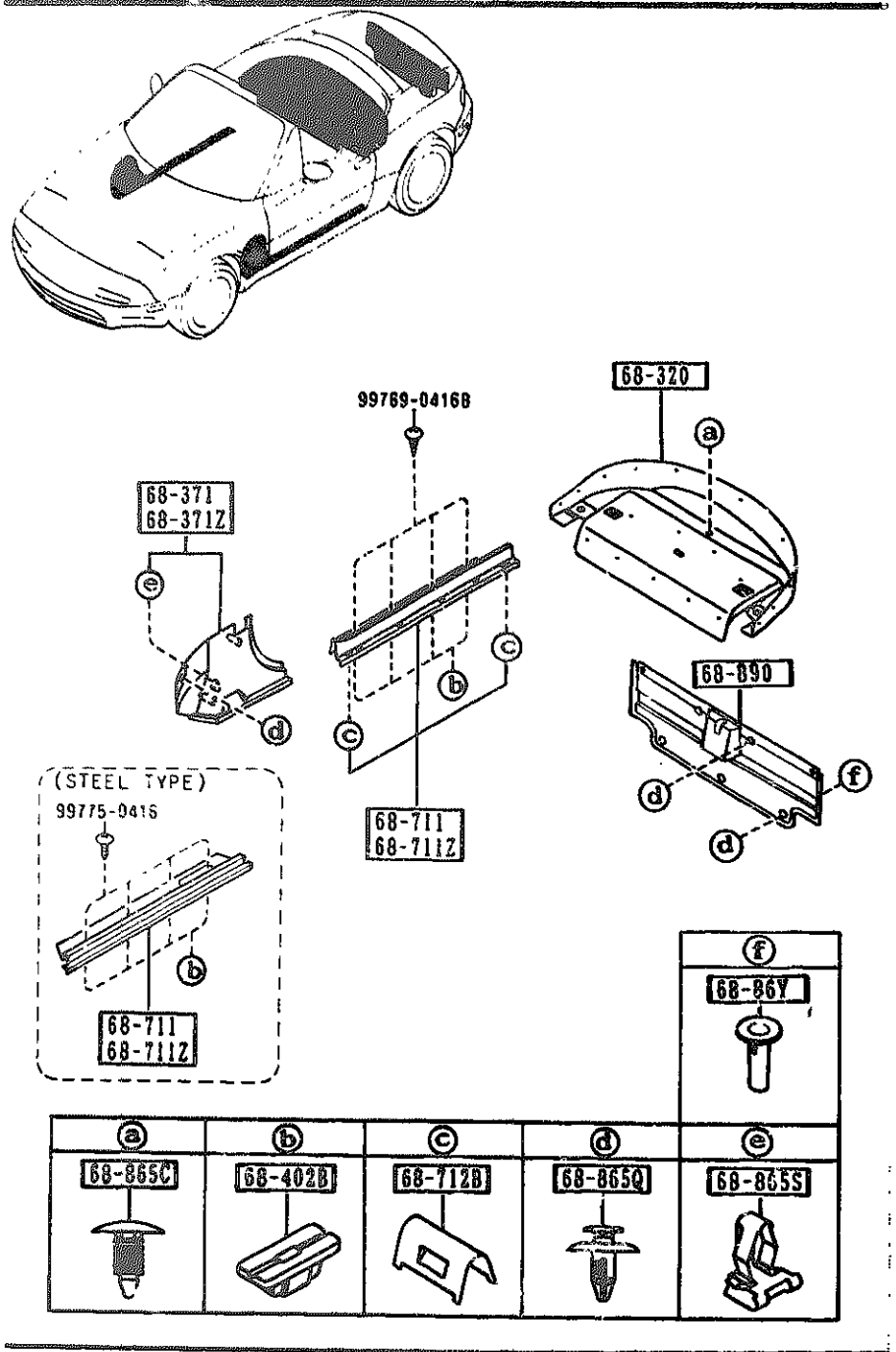

PART NO.	QTY	MODEL/RESTRICTION	MODEL/RESTRICTION	MODEL/RESTRICTION	FROM-TO
CONT'D					
00		NA0 BLACK			
68-865S		CLIP,TRIM			
GJ12-68-865	2				
68-890		TRIM,TRUNK END			
NA01-68-891	1				
00		NA0 BLACK			

6860 FLOOR MATS & PADS

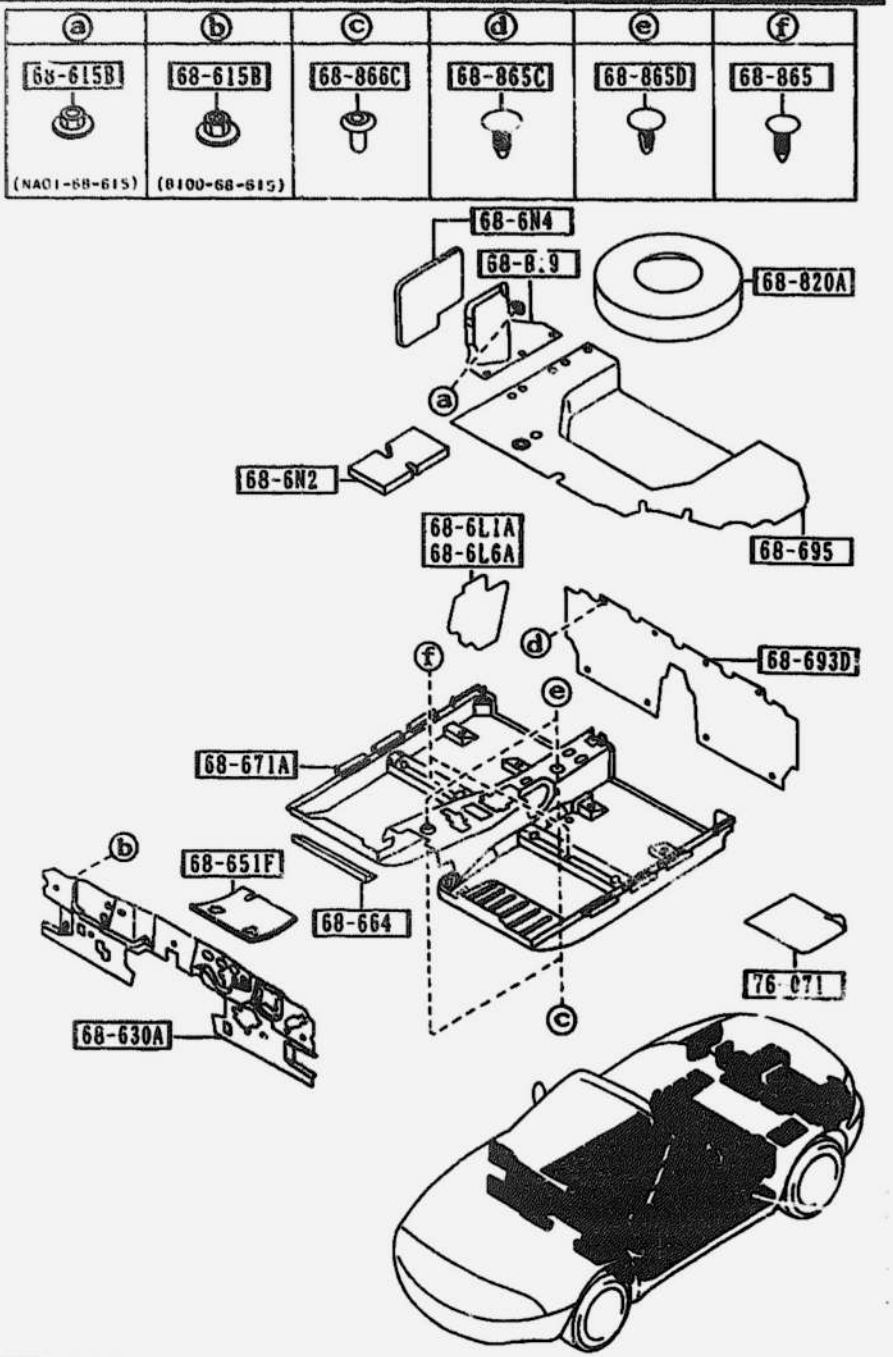

PART NO.	QTY	MODEL/RESTRICTION	MODEL/RESTRICTION	MODEL/RESTRICTION	FROM-TO
68-6L1A		COVER(R),HOLE			
NA01-68-6L1	1				
68-6L6A		COVER(L),HOLE			
NA01-68-6L6	1				
68-6N2		INSULATOR,RR FLOOR			
NA01-68-6N2	2				
68-6N4		PAD,RR FENDER			
NA01-68-6N4	1				
68-615B		NUT,FLANGE-CAP			
8100-68-615	5				
NA01-68-615	1				
68-630A		INSULATOR,DASHBOARD			
NA01-68-631A	1				-0701
A (NA01-68-631B)					
NA01-68-631B	1				0701-
68-651F		PAD,FRONT FLOOR			
FB01-68-652	1				
68-664		CUSHION,UNIT COVER			
NA01-68-664A	1				0701-
68-671A		MAT,FLOOR			
NA01-68-671	1				-0401
A (NA01-68-67XB)					
00		NA0 BLACK			
NA01-68-67XB	1				0401-
00		BLACK			
68-693D		MAT,REAR END			
NA01-68-693	1	(BLACK-USA)			
00		NA0 BLACK			
68-695		MAT,TRUNK ROOM			
NA01-68-811	1				

0401 NA35##-146561
0701 NA35##-200041

6860 FLOOR MATS & PADS

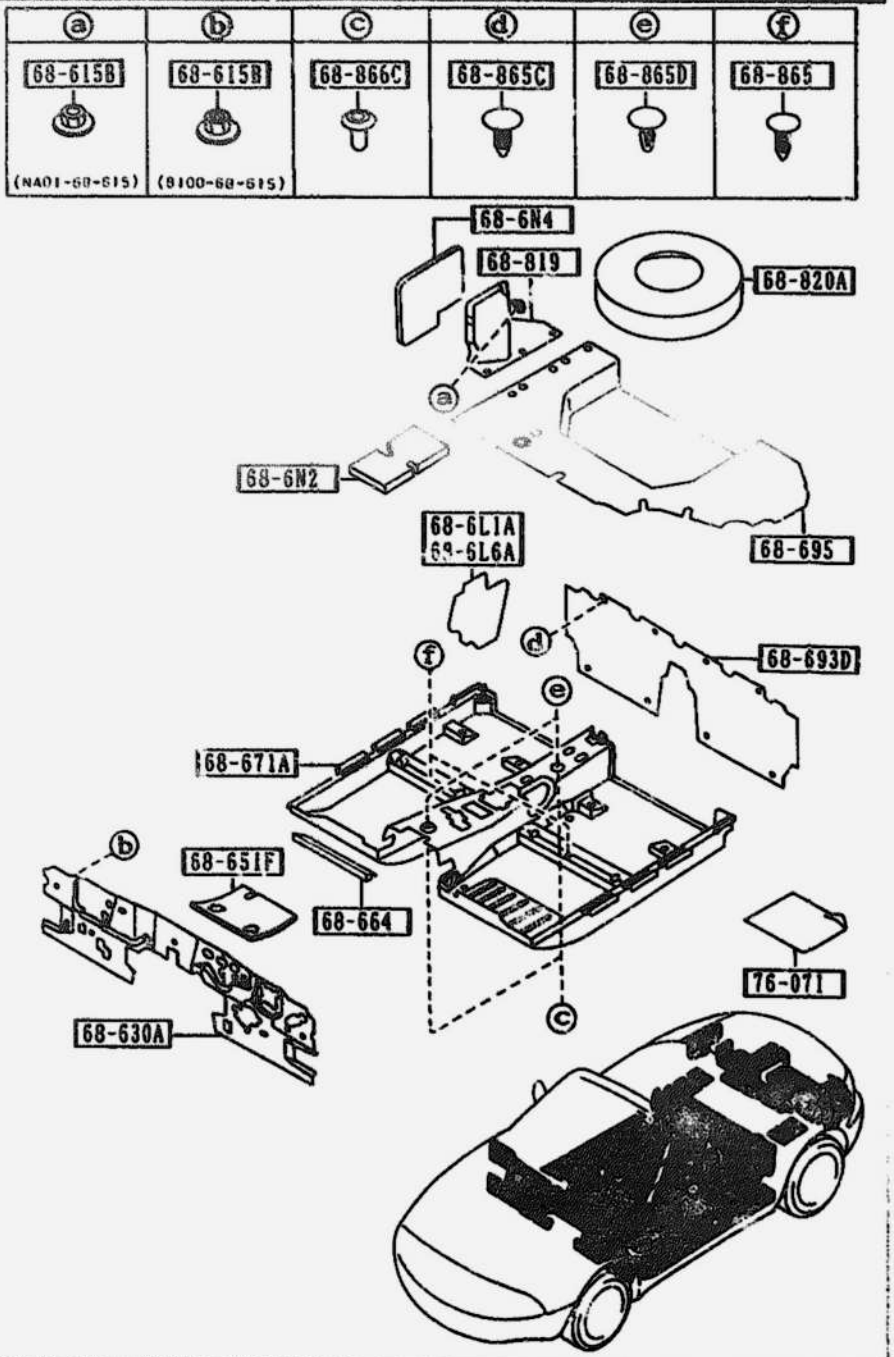

PART NO.	QTY	MODEL/RESTRICTION	MODEL/RESTRICTION	MODEL/RESTRICTION	FROM-TO
CONT'D					
00		NA0 BLACK			
68-819		COVER,BATTERY			
NA01-68-819B	1				
00		NA0 BLACK			
68-820A		COVER,SPARE TIRE			
NA01-68-8P9A	1				
68-865		FAS.ENER			
B003-68-865	2				
00		NA0 BLACK			
68-865		FASTENER			
G032-68-865A	4				
00		NA0 BLACK			
68-865D		FASTENER			
S083-68-865A	6				
00		NA0 BLACK			
68-866C		FASTENER,SEAL			
B235-68-865A	6				
76-071		SILENCER,FLOOR			
0208-76-071	1	30CMX30CM			

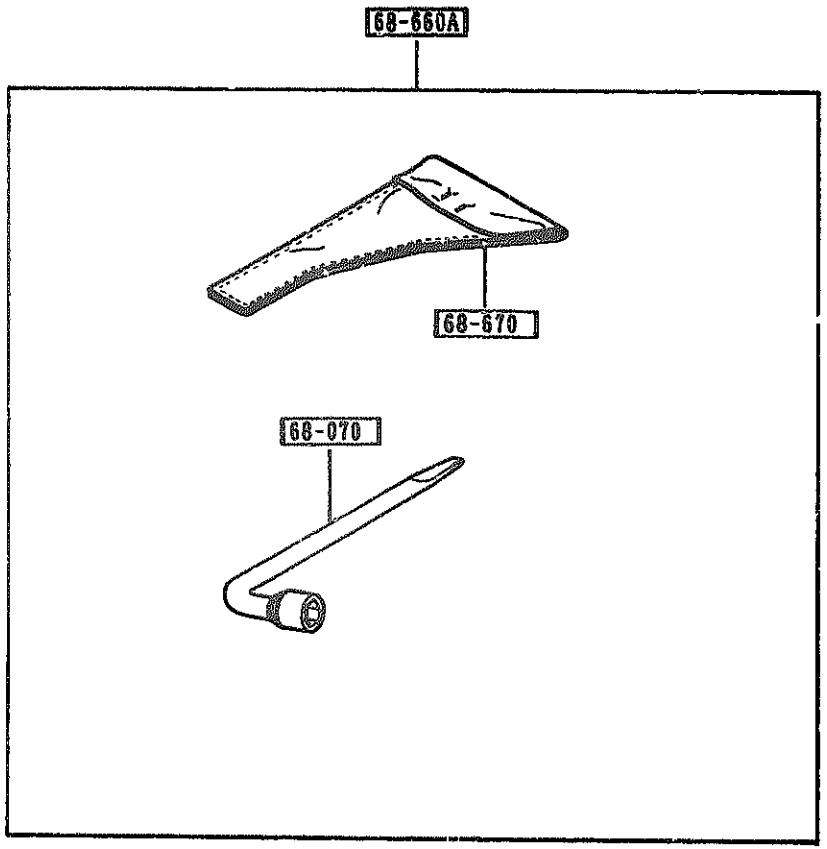

PART NO.	QTY	MODEL/RESTRICTION	MODEL/RESTRICTION	MODEL/RESTRICTION	FROM-TO
68-070		WRENCH,HUB NUT			
0810-68-070D	1				-9421
NA01-68-070	1				9421-
68-660A		TOOL SET			
NA01-69-650	1				
68-670		BAG,TOOL			
8173-69-670	1				-9601
NA01-69-670	1				9601-

9421 NA35##-101369
9601 NA35##-106797

6900 -1 VISORS,ASSIST HANDLES & MIRRORS

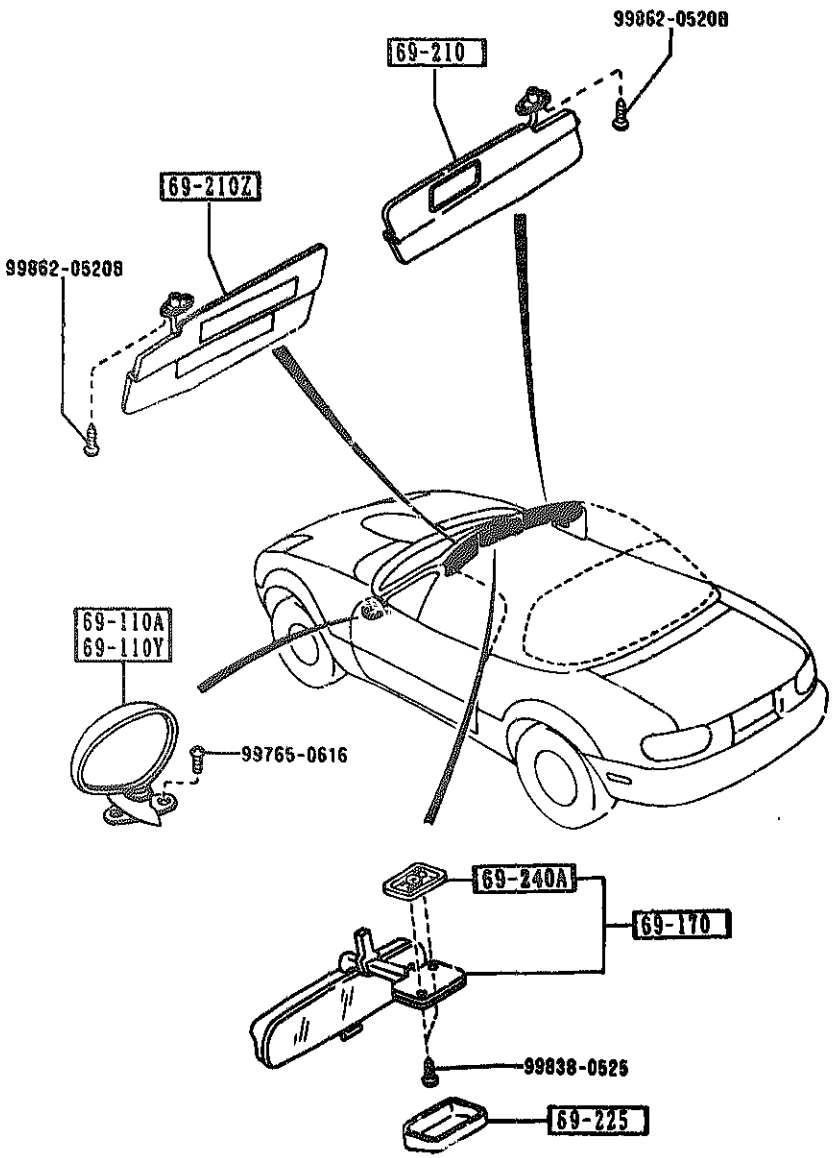

PART NO.	QTY	MODEL/RESTRICTION	MODEL/RESTRICTION	MODEL/RESTRICTION	FROM-TO
69-110A		MIRROR(R),DOOR			
NA05-69-120	1				
DU		DU MARINER BLUE			
HU		HU NEO GREEN			
SU		SU CLASSIC RED			
UC		UC CRYSTAL WHITE			
3L		3L SILVER STONE METALLIC			
69-110Y		MIRROR(L),DOOR			
NA05-69-180	1				
DU		DU MARINER BLUE			
HU		HU NEO GREEN			
SU		SU CLASSIC RED			
UC		UC CRYSTAL WHITE			
3L		3L SILVER STONE METALLIC			
69-170		MIRROR,INTERIOR			
NA01-69-220	1				
00		NA0 BLACK			
69-210		SUN VISOR(R)			
NA01-69-270A AN(-NA01-69-270B)	1				-9601
02		NA0 BLACK			
NA01-69-270B	1				9601-
02		NA0 BLACK			
69-210Z		SUN VISOR(L)			
NA01-69-320B AN(NA01-69-320C)	1				-9601
02		NA0 BLACK			
NA01-69-320C	1	(W/AIR BAG)			9601-
02		NA0 BLACK			
NA07-69-320B	1	(W/O AIR BAG)			0701-
02		NA0 BLACK			

9601 NA35##-106797
0701 NA35##-200041

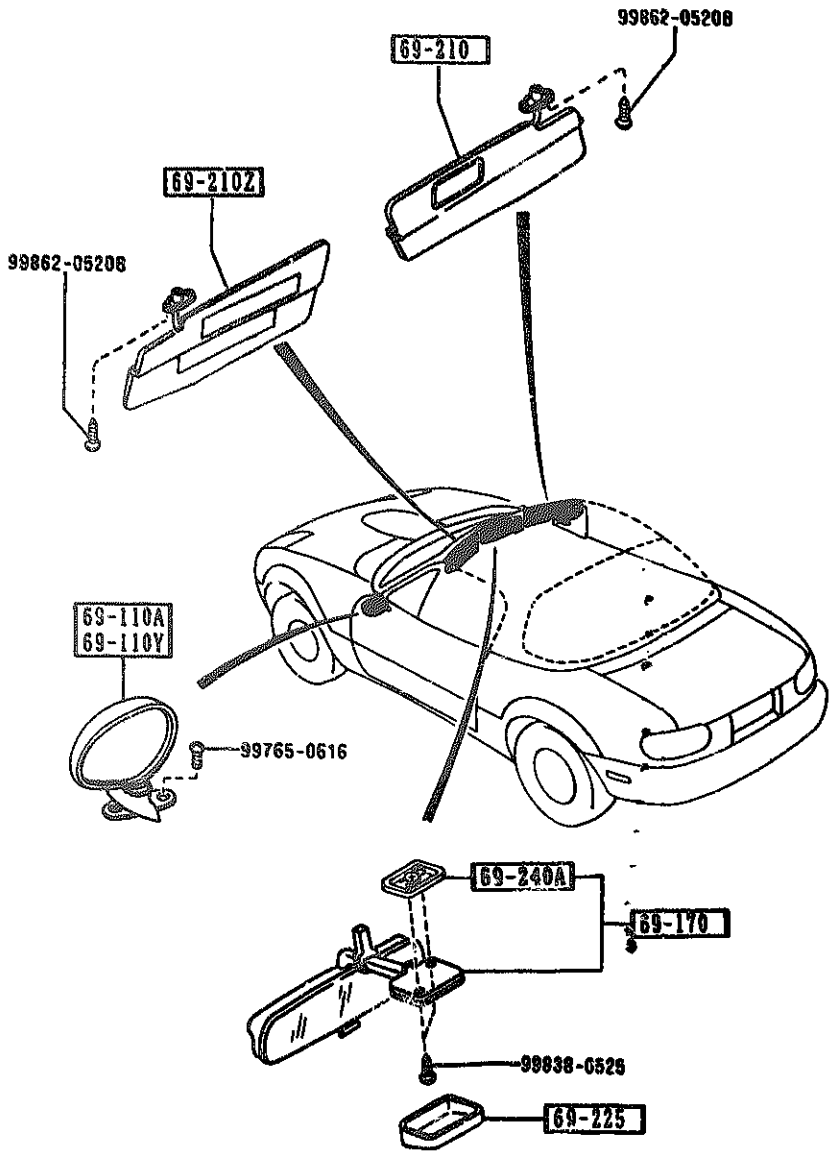

AUNA01

PART NO.	QTY	MODEL/RESTRICTION	MODEL/RESTRICTION	MODEL/RESTRICTION	FROM-TO
69-225		COVER,INTERIOR MIRRO R			
GJ21-69-225	1				
00		NA0 BLACK			
69-240A		BASE,INTERIOR MIRROR			
NA01-69-240	1				

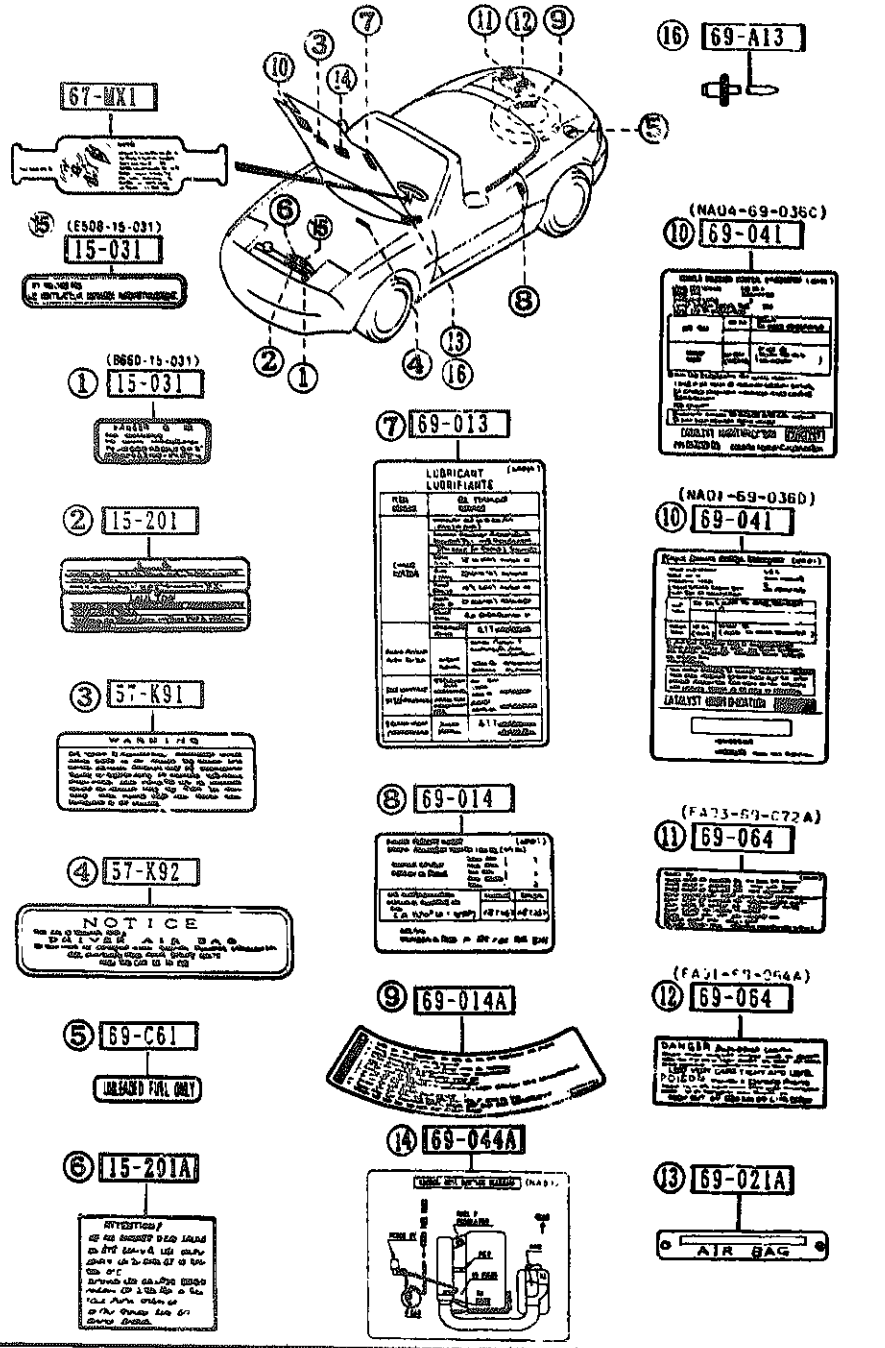

PART NO.	QTY	MODEL/RESTRICTION	MODEL/RESTRICTION	MODEL/RESTRICTION	FROM-TO
15-031		LABEL,CAUTION			
B660-15-031	1				
E508-15-031	1				
15-201		PLATE,CAUTION			
0488-15-201	1				
15-201A		LABEL,CAUTION-RADTOR			
8791-15-201	1				
57-K91		LABEL'A',CAUTION-A/B			
NA01-57-K91	1	(W/AIR BAG)			-0701
57-K92		LABEL'B',CAUTION-A/B			
NA01-57-K92	1	(W/AIR BAG)			-0701
67-MX1		LABEL,CAUTION-AIR BAG			
NA01-67-MX1	1	(W/AIR BAG)			
69-A13		RIVET,BUND-MODEL PLATE			
GJ21-69-A13	2				0701-
69-C61		LABEL,UNLEADED FUEL			
UB40-69-C61	1				
69-013		LABEL,OIL			
NA01-69-D21A (NA01-69-D21C)	1				-0201
NA01-69-D21C	1				0201-
69-014		LABEL,TIRE			
NA01-69-014	1				
69-014A		LABEL,TEMPORARY TIRE			
BF68-69-073	1	ENGLISH			
69-021A		PLATE,CAUTION			
NA01-69-068	1	(VIN PLATE-USA)			
69-041		LABEL,EMISSION			

0201 NA35##-137180
0701 NA35##-206041

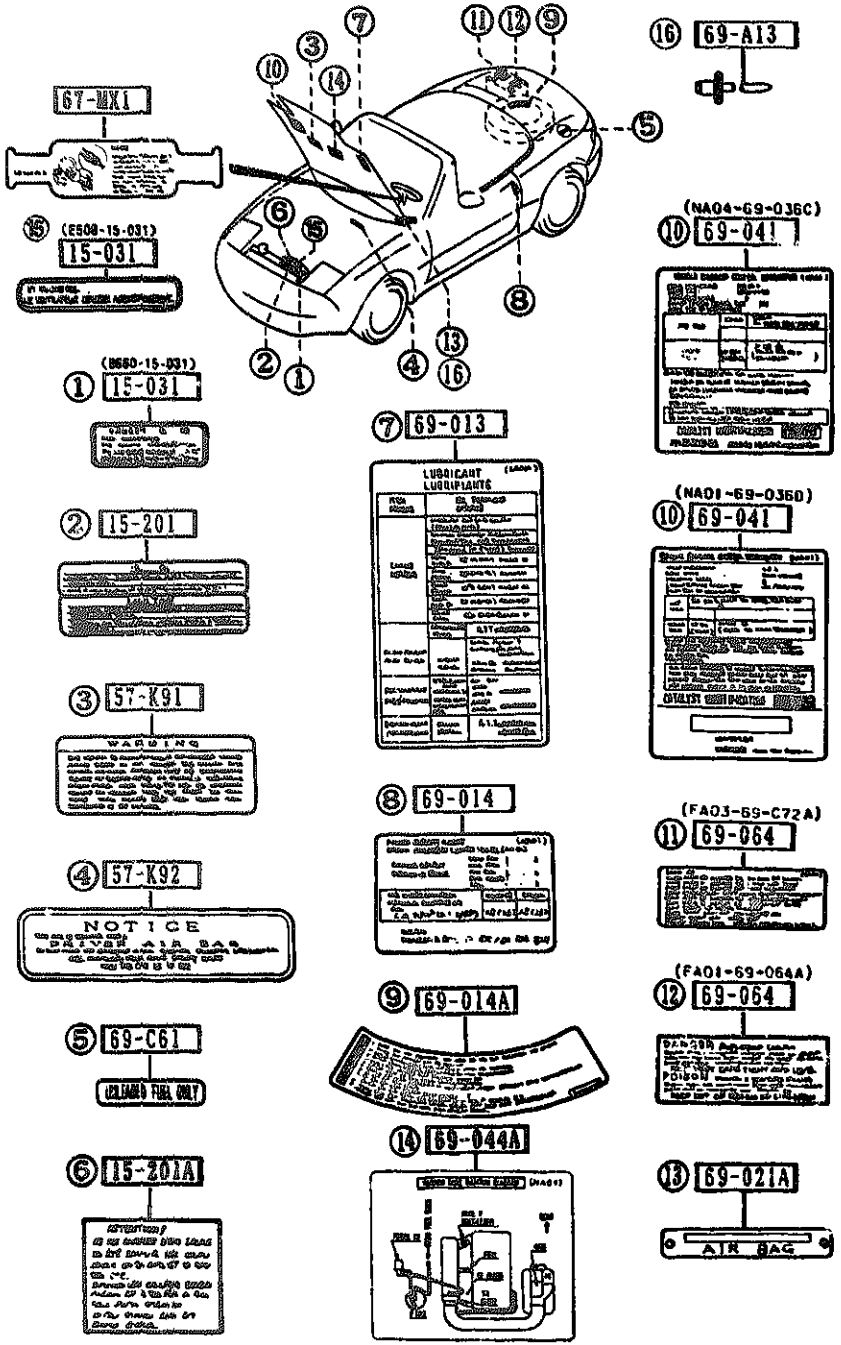

PART NO.	QTY	MODEL/RESTRICTION	MODEL/RESTRICTION	MODEL/RESTRICTION	FROM-TO
CONT'D					
NA01-69-036A A (NA01-69-036C)	1				-9C20
NA04-69-036 A (NA04-69-036B)	1				-9C20
NA01-69-036C	1	(CALIF)			9C20-0701
NA04-69-036B	1	(FED)			9C20-0701
NA01-69-036D	1	(CALIF)			0701-
NA04-69-036C	1	(FED)			0701-
69-044A		LABEL,VAC.DIAPHRAGM			
NA01-69-044	1	(CALIF)			-0701
69-064		LABEL,BATTERY			
FA01-69-064A	1	(W/BATTERY LABEL)			
FA03-69-C72 A (FA03-69-C72A)	1				-9728
FA03-69-C72A	1	(W/BATTERY LABEL)			9728-

9728 NA35※※-115823
9C20 NA35※※-132500
0701 NA35※※-200041

7250 -1 ※ QUARTER WINDOW & TRIMS

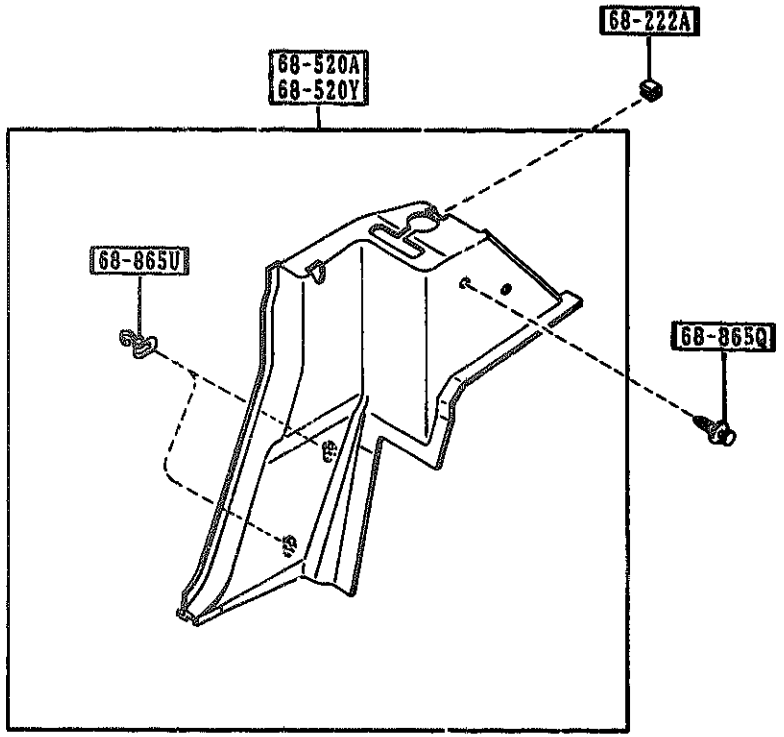

PART NO.	QTY	MODEL/RESTRICTION	MODEL/RESTRICTION	MODEL/RESTRICTION	FROM-TO
68-222A		COVER,HOLE			
NA01-68-222A	2				
00		NA0 NA1 BLACK			
68-520A		TRIM(R),QUARTER			
NA01-68-52.A	1	BASE, (W/O DETACHABLE TOP)			
00		NA0 NA1 BLACK			
NA02-68-520A	1	OPTION, (W/DETACHABLE TOP)			
00		NA0 NA1 BLACK			
68-520Y		TRIM(L),QUARTER			
NA01-68-550A	1	BASE, (W/O DETACHABLE TOP)			
00		NA0 NA1 BLACK			
NA02-68-550A	1	OPTION, (W/DETACHABLE TOP)			
00		NA0 NA1 BLACK			
68-865Q		FASTENER			
GJ21-68-885A	2				-9526
AN(GJ21-68-885B)					
00		NA0 BLACK			
GJ21-68-885B	2				9526-
00		NA0 BLACK			
68-865U		CLIP,TRIM			
GJ21-68-865	4				

9526 NA35ᴹᴹ-105742