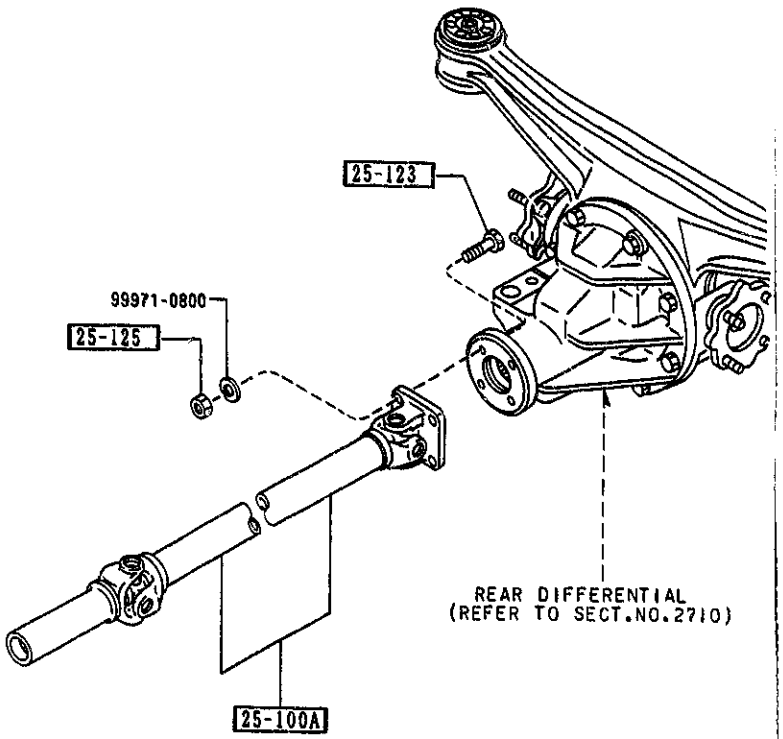

2505 -1 * REAR PROPELLER SHAFT

PART NO.	QTY	MODEL/RESTRICTION	MODEL/RESTRICTION	MODEL/RESTRICTION	FROM·TO
25-100A		SHAFT,PROPELLER			
M091-25-100	1				
25-123		BOLT			
N010-25-123	4				
25-125		NUT			
1496-25-125	4				

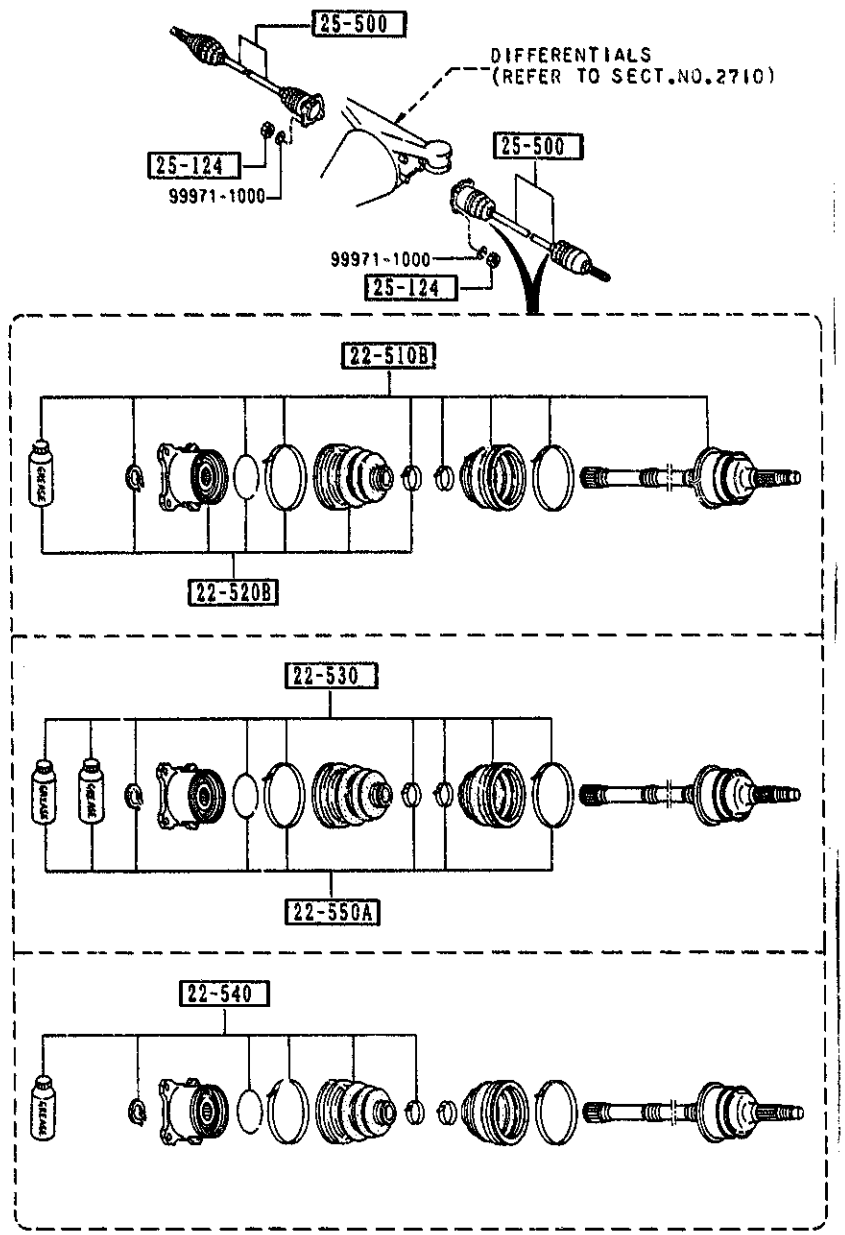

PART NO.	QTY	MODEL/RESTRICTION	MODEL/RESTRICTION	MODEL/RESTRICTION	FROM TO
22-510B		JOINT SET,OUTER			
M090-22-510	2	(W/O A.LOCK BRAKE)			
M091-22-510	2	(A.LOCK BRAKE)			
22-520B		JOINT SET(R),INNER			
M090-22-520	2				
22-530		BOOT SET,OUTER JOINT			
M090-22-530	2				
22-540		BOOT SET,INNER JOINT			
M090-22-540	2				
22-550A		CLIP SET,DRIVE SHAFT			
M090-22-550	2				
25-124		NUT			
1368-25-124	8				
25-500		SHAFT,DRIVE			
M090-25-500	2	(W/O A.LOCK BRAKE)			
M091-25-500	2	(A.LOCK BRAKE)			

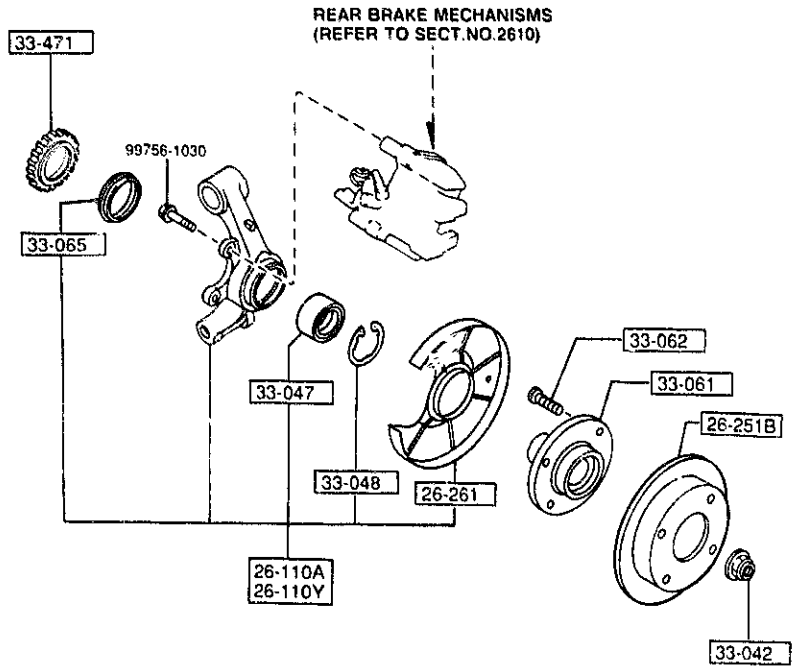

PART NO.	QTY	MODEL/RESTRICTION	MODEL/RESTRICTION	MODEL/RESTRICTION	FROM TO
26-110A		KNUCKLE(R),REAR			
NA01-26-130A	1	(W/O A.LOCK BRAKE)			-2101
NA23-26-130	1	(A.LOCK BRAKE)			-2101
NA01-26-130B	1	(W/O A.LOCK BRAKE)			2101-
NA23-26-130A	1	(A.LOCK BRAKE)			2101-
26-110Y		KNUCKLE(L),REAR			
NA01-26-140A	1	(W/O A.LOCK BRAKE)			-2101
NA23-26-140	1	(A.LOCK BRAKE)			-2101
NA01-26-140B	1	(W/O A.LOCK BRAKE)			2101-
NA23-26-140A	1	(A.LOCK BRAKE)			2101-
26-251B		PLATE,DISC			
NA01-26-251A	2				
26-261		COVER,DUST			
NA01-26-261A	2				
33-042		NUT			
NA01-33-042A (NA01-33-042B)	2	W/WASHER			-0820
NA01-33-042B	2	W/WASHER			0820-
33-047		BEARING,WHEEL			
B455-33-047A	2				-2101
B455-33-047B	2				2101-
33-048		RING,RETAINING-DISC PLATE			
H260-33-048	2				
33-061		HUB,WHEEL			
B455-33-061	2				
33-062		BOLT,HUB			
B455-33-062	8				
33-065		SEAL,OIL-AXLE			
G304-33-065	2				

0820 NA35**-206394
2101 NA35**-313937

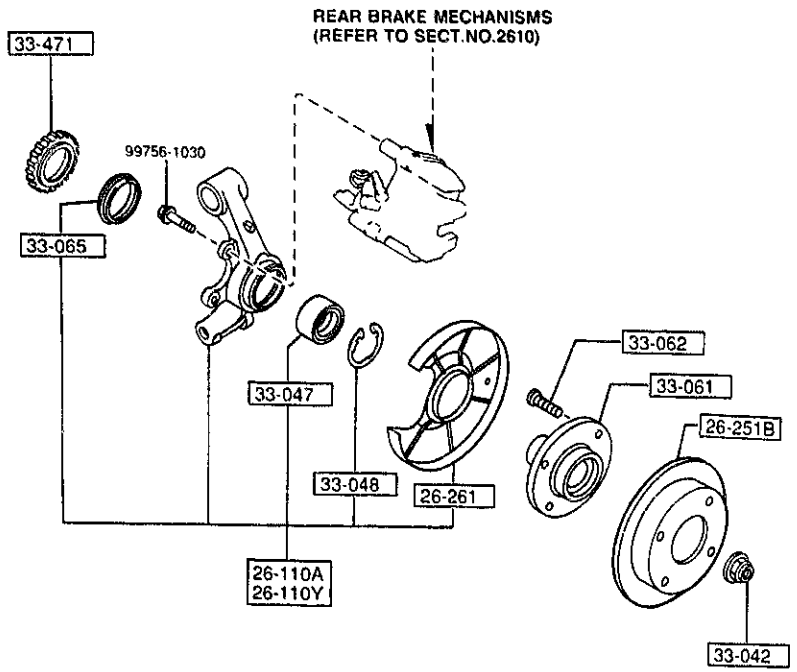

PART NO.	QTY	MODEL/RESTRICTION	MODEL/RESTRICTION	MODEL/RESTRICTION	FROM TO
33-471		ROTOR,SENSOR-FRT A.B.S.			
B603-33-471	2				

2610 -1 REAR BRAKE MECHANISMS

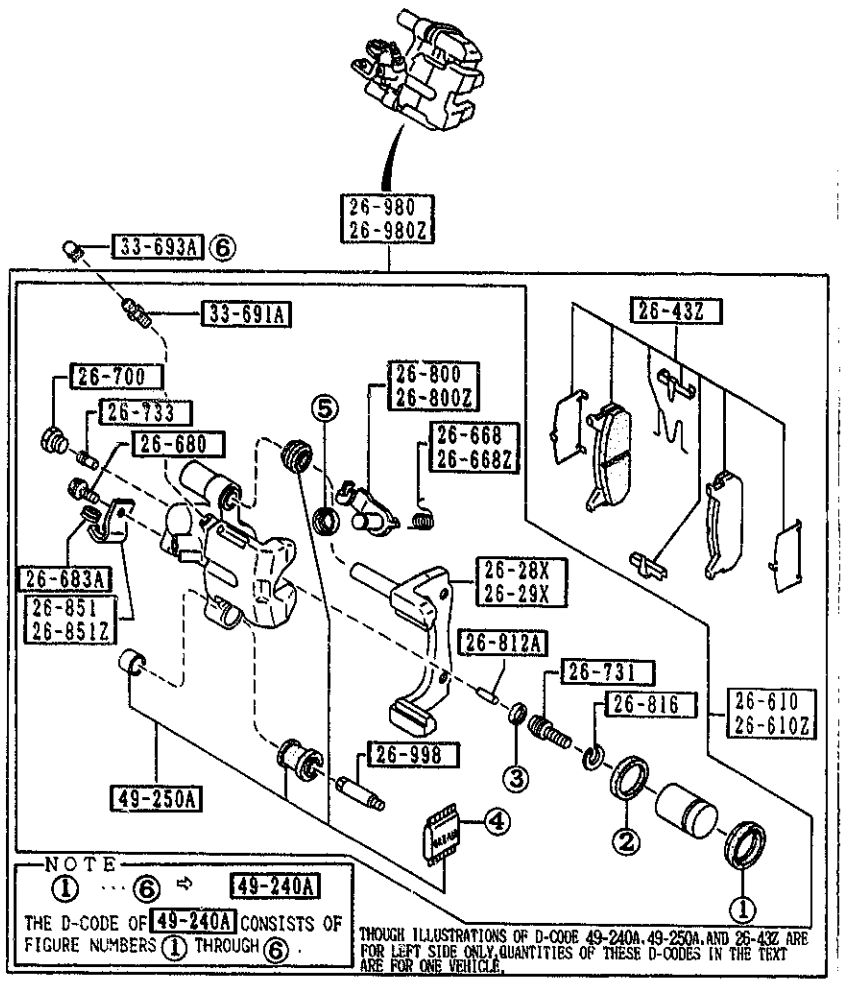

PART NO.	QTY	MODEL/RESTRICTION	MODEL/RESTRICTION	MODEL/RESTRICTION	FROM-TO
26-28X NA10-26-28X	1	SUPPORT(R),MOUNTING			
26-29X NA10-26-29X	1	SUPPORT(L),MOUNTING			
26-43Z NAY0-26-43Z	1	PAD SET,RR CALIPER NON ASBESTOS			
26-610 NA01-26-61X	1	BODY & PISTON(R),CALIPER			
26-610Z NA01-26-71X	1	BODY & PISTON(L),CALIPER			
26-668 BW0H-26-668	1	SPRING(R),LEVER			
26-668Z BW0H-26-669	1	SPRING(L),LEVER			
26-680 BW0H-26-680	2	BOLT			
26-683A BW0H-26-683	2	PROTECTOR			
26-700 BW0H-26-700	2	PLUG,SCREW			
26-731 BW0H-26-731	2	SPINDLE,ADJUSTER			
26-733 BW0H-26-733	2	GEAR,ADJUST			
26-800 BW0H-26-800	1	LEVER(R),OPERATING			
26-800Z		LEVER(L),OPERATING			

2610 -2 * REAR BRAKE MECHANISMS

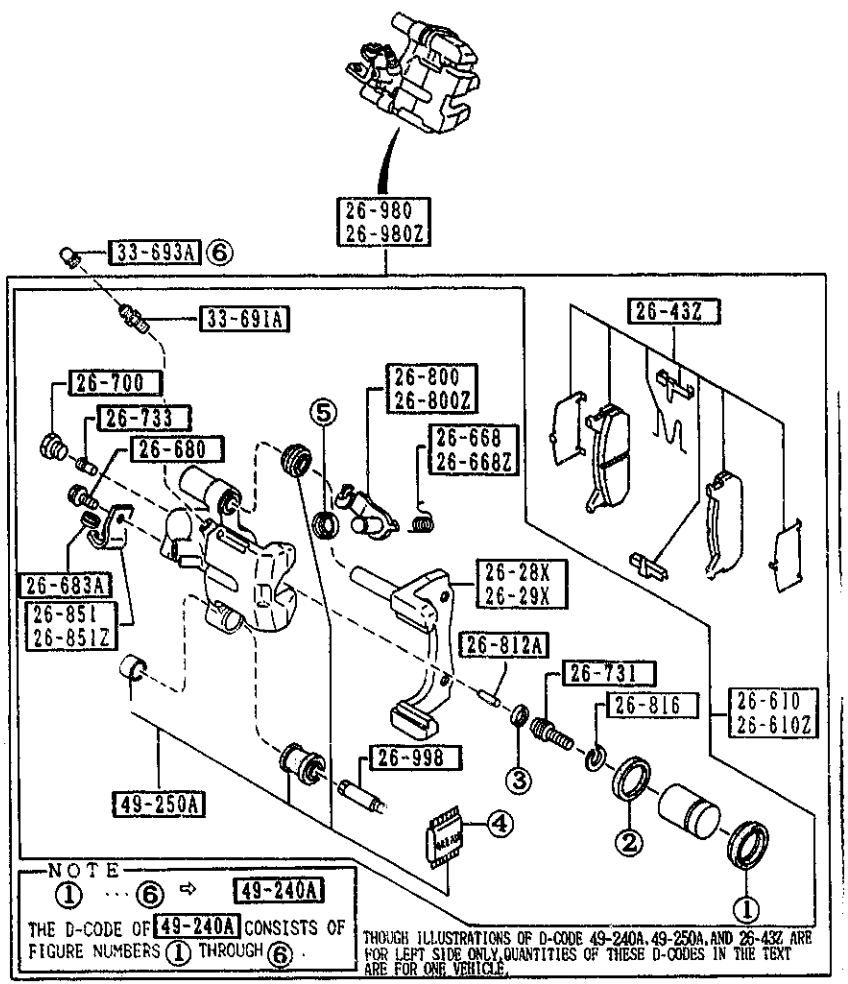

PART NO.	QTY	MODEL/RESTRICTION	MODEL/RESTRICTION	MODEL/RESTRICTION	FROM-TO
CONT'D					
BW0H-26-810	1				
26-812A		ROD,PUSH-FRT CALIPER			
BW0H-26-812	2				
26-816		RING,SNAP-RR CALIPER			
BW0H-26-816	2				-2401
GA2E-26-816	2				2401-
26-851		BRACKET(R),CABLE			
BW0H-26-851	1				
26-851Z		BRACKET(L),CABLE			
BW0H-26-861	1				
26-980		CALIPER(R),RR BRAKE			
NA01-26-980A	1				
26-980Z		CALIPER(L),RR BRAKE			
NA01-26-990A	1				
26-998		PIN,GUIDE			
BW0H-26-998A	2				
33-691A		SCREW,BLEEDER			
BW0H-26-691	2				
33-693A		CAP,BLEEDER SCREW			
0259-33-693	2				
49-240A		SEAL KIT,CALIPER-RR			
NAY1-26-44Z	1				
49-250A		BOOT KIT,RR CALIPER			
BWYH-26-45Z	1				

2401 NA35**-321905

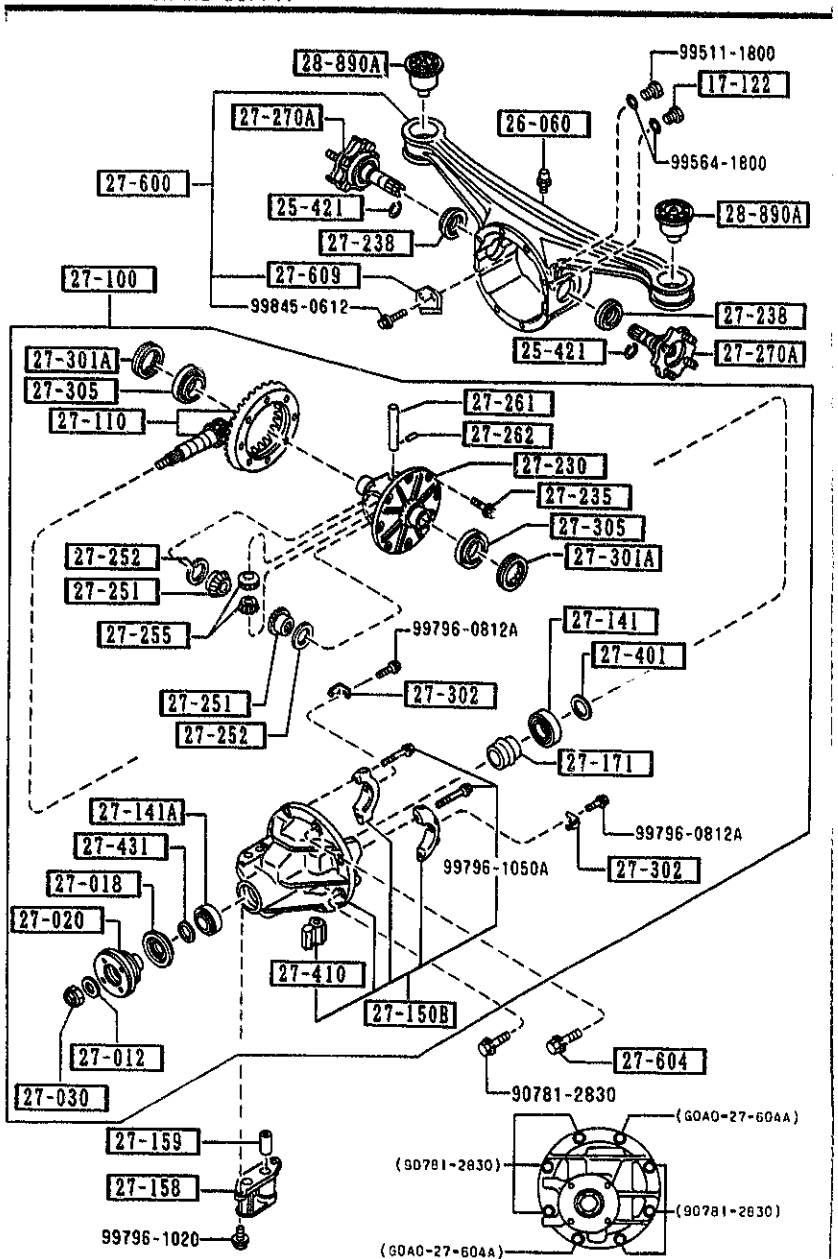

AUNA02

PART NO.	QTY	MODEL/RESTRICTION	MODEL/RESTRICTION	MODEL/RESTRICTION	FROM-TO
17-122		PLUG,MAGNET			
0810-17-121	1				
25-421		CLIP			
F001-25-421A	2				-2301
F002-25-421	2				2301-
26-060		BREATHER			
0730-26-060	1				
27-012		WASHER			
3919-27-012	1				
27-018		SEAL,OIL			
T020-27-165	1				
27-020		FLANGE,COMPANION			
T002-27-120B	1				
27-030		NUT,LOCK			
3919-27-130	1				
27-100		DRIVING & DIFF.			
T020-27-100K C (T020-27-100L)	1				-2301
T020-27-100L	1				2301-
27-110		GEAR SET,FINAL			
T020-27-110B C (T020-27-110C)	1	R=4.300			-2301
T020-27-110C	1	R=4.300			2301-
27-141		BEARING,PINION			
0755-27-210	1				
27-141A		BEARING,PINION			
3919-27-220	1				
27-150B		CARRIER,DIFFERENTIAL -FRT			
T020-27-150D A (T020-27-150E)	1				-2301

T020-27-100K	T006-27-403	T006-27-412	2301 NA35**-319568
C T020-27-100L	T006-27-404	T006-27-413	
T020-27-600G	T006-27-405	T006-27-414	
T020-27-110B	T006-27-406	T006-27-415	
C T020-27-110C	T006-27-407		
T020-27-150E	T006-27-408		
T006-27-401	T006-27-409		
T006-27-402	T006-27-411		

CAT. AUNA02-07 1993-12

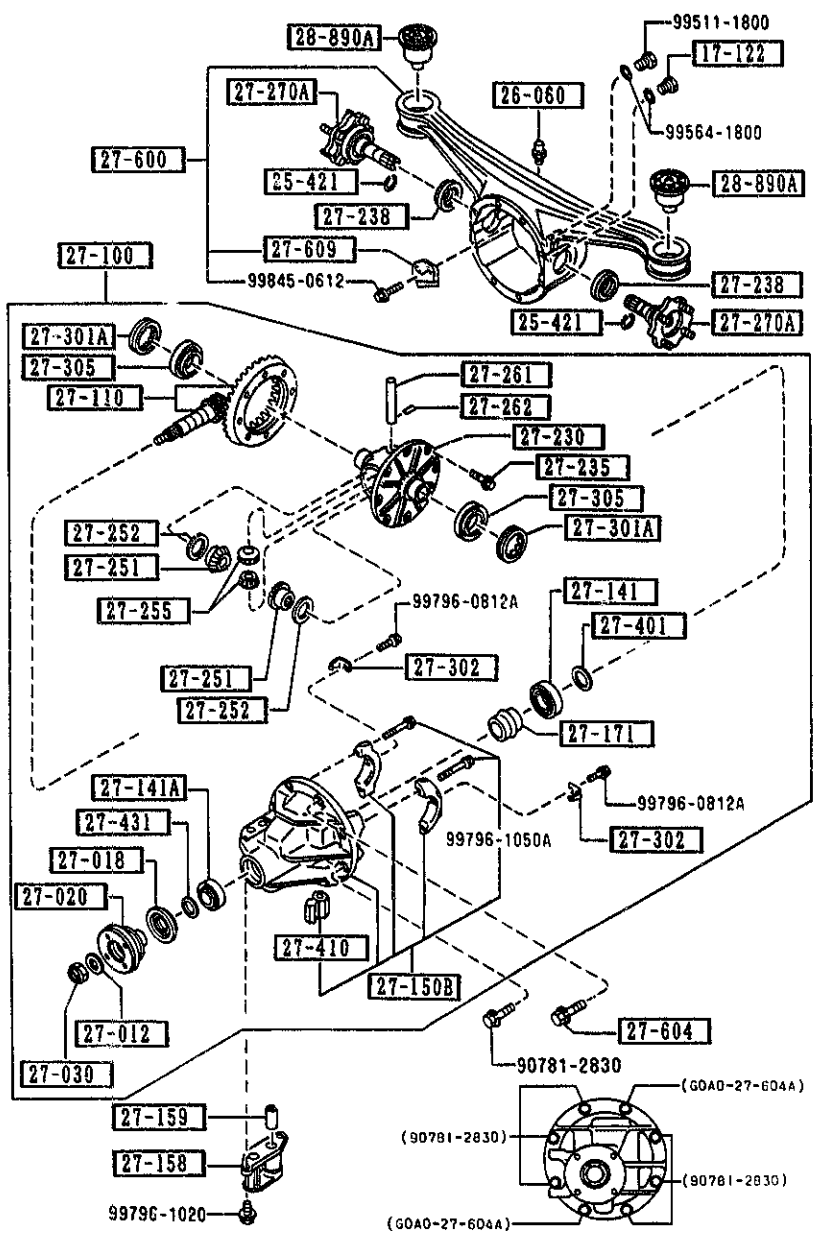

PART NO.	QTY	MODEL/RESTRICTION	MODEL/RESTRICTION	MODEL/RESTRICTION	FROM-TO
CONT'D					
T020-27-150E	1				2301-
27-158		SPACE			
T020-27-158A	1				
27-159		PIN,TUBULAR			
T020-27-159A	1				
27-171		PIECE,DISTANCE			
T020-27-171	1				
27-230		CASE			
T005-27-231	1				
27-235		BOLT,RING GEAR			
3919-27-235	8	D=10.2MM			
3919-27-236	8	D=10MM			
27-238		SEAL,OIL			
T020-27-238	2				
27-251		GEAR,DIFF.SIDE			
F035-27-251	2				
27-252		WASHER			
F001-27-252	2	T=2MM			
F001-27-253	2	T=2.1MM			
F001-27-254	2	T=2.2MM			
27-255		PINION,DIFFERENTIAL			
T020-27-255 AN(T020-27-255A)	2				-1501
T020-27-255A	2				1501-
27-261		SHAFT,DIFF. PINION			
F001-27-261A	1				

1501 NA35**-233754
2301 NA35**-3 0568

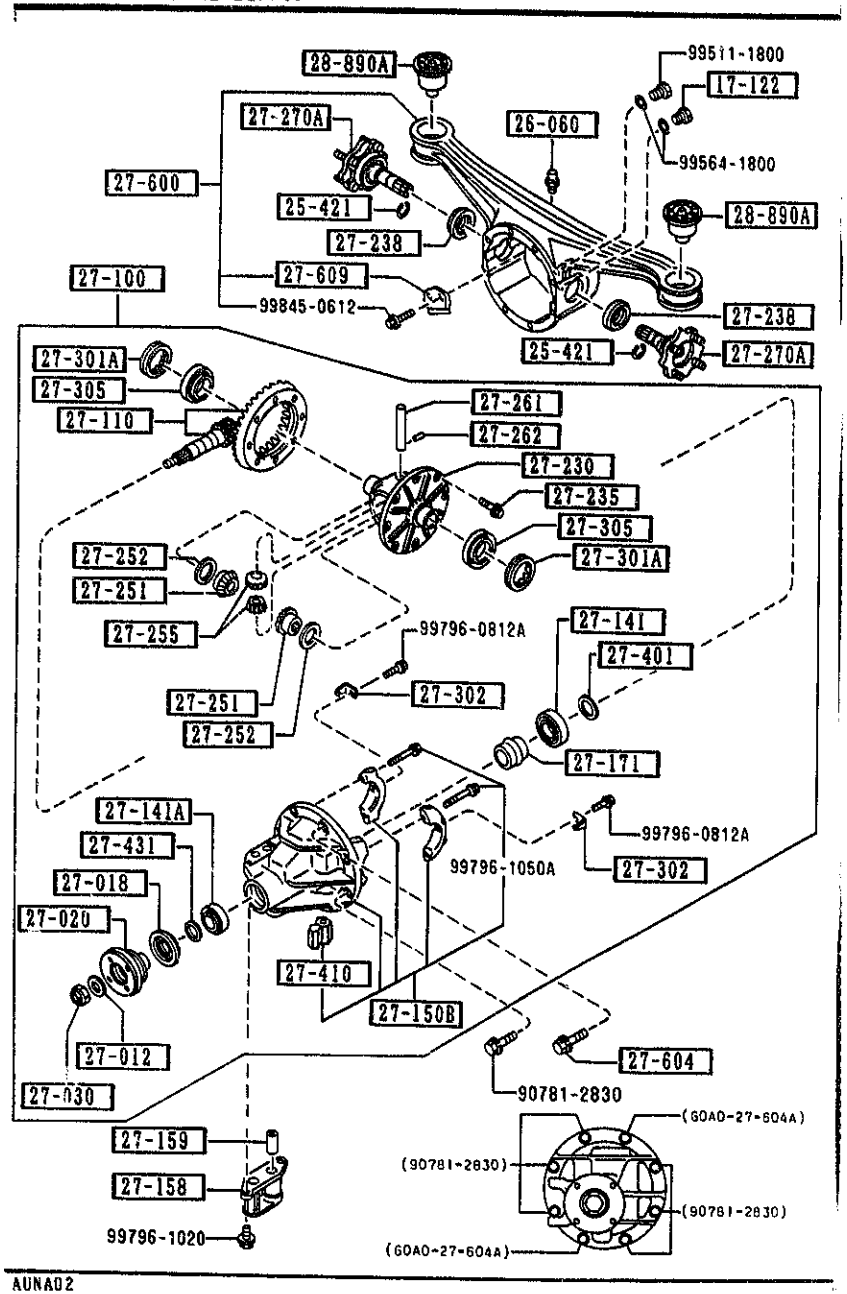

AUNA02

PART NO.	QTY	MODEL/RESTRICTION	MODEL/RESTRICTION	MODEL/RESTRICTION	FROM-TO
27-262		PIN			
0114-27-262	1				
27-270A		SHAFT,OUTPUT			
T005-27-270B	2				-2301
T005-27-270C	2				2301-
27-301A		SCREW,ADJUST			
0180-27-301A	2				
27-302		PLATE,LOCK			
0290-27-302	2				
27-305		BEARING			
0249-27-350	2				
27-401		SPACER			
0259-27-401	1	T=3.08MM			-2301
0259-27-402	1	T=3.11MM			-2301
0259-27-403	1	T=3.14MM			-2301
0259-27-404	1	T=3.17MM			-2301
0259-27-405	1	T=3.2MM			-2301
0259-27-406	1	T=3.23MM			-2301
0259-27-407	1	T=3.26MM			-2301
0259-27-408	1	T=3.29MM			-2301
0259-27-409	1	T=3.32MM			-2301
0259-27-411	1	T=3.35MM			-2301
0259-27-412	1	T=3.38MM			-2301
0259-27-413	1	T=3.41MM			-2301
0259-27-414	1	T=3.44MM			-2301

2301 NA35**-319568

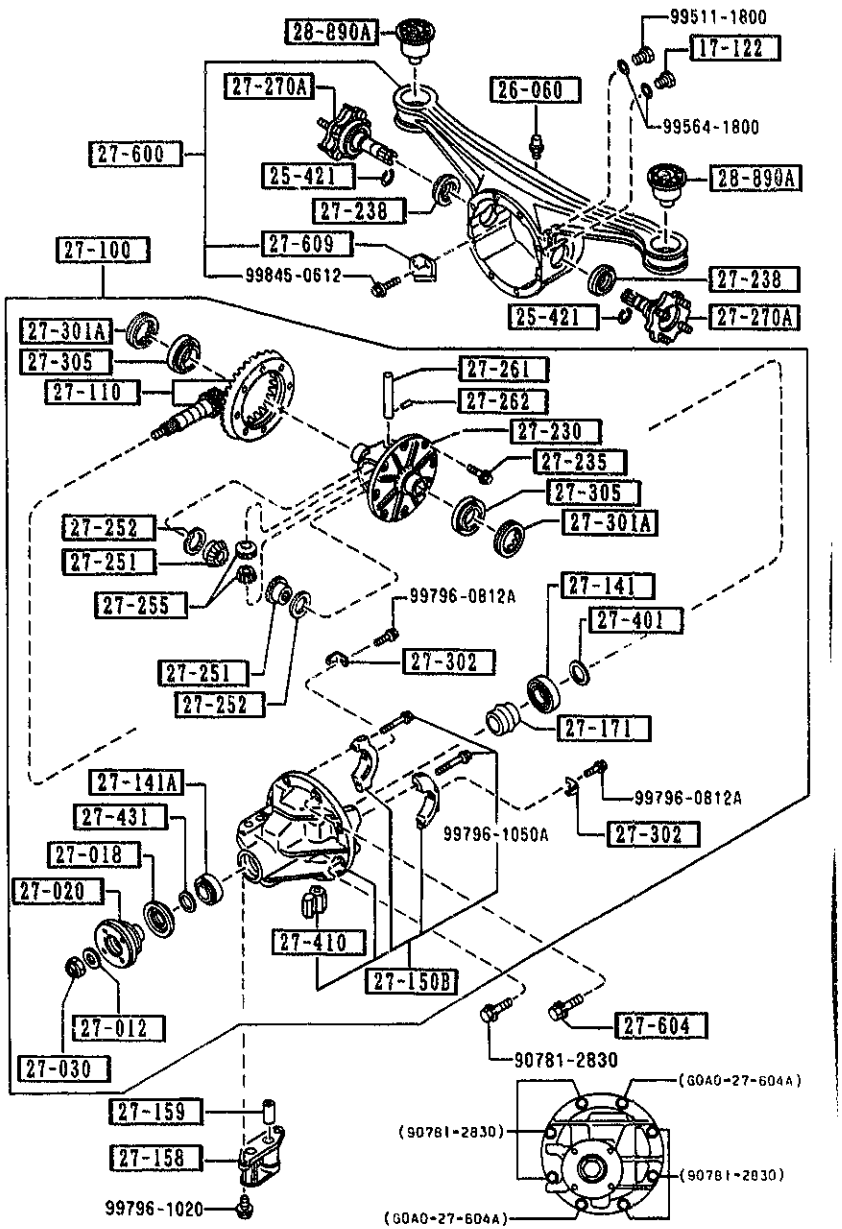

PART NO.	QTY	MODEL/RESTRICTION	MODEL/RESTRICTION	MODEL/RESTRICTION	FROM-TO
CONT'D					
0259-27-415	1	T=3.47MM			-2301
T006-27-401	1	T=2.08MM			2301-
T006-27-402	1	T=2.11MM			2301-
T006-27-403	1	T=2.14MM			2301-
T006-27-404	1	T=2.17MM			2301-
T006-27-405	1	T=2.2MM			2301-
T006-27-406	1	T=2.23MM			2301-
T006-27-407	1	T=2.26MM			2301-
T006-27-408	1	T=2.29MM			2301-
T006-27-409	1	T=2.32MM			2301-
T006-27-411	1	T=2.35MM			2301-
T006-27-412	1	T=2.38MM			2301-
T006-27-413	1	T=2.41MM			2301-
T006-27-414	1	T=2.44MM			2301-
T006-27-415	1	T=2.47MM			2301-
+----------+					
| 27-410 |		SPACER			
+----------+					
*T020-27-410	1	L=50.850			
*T021-27-410	1	L=50.875			
*T022-27-410	1	L=50.900			
*T023-27-410	1	L=50.925			
*T024-27-410	1	L=50.950			
*T025-27-410	1	L=50.975			
*T026-27-410	1	L=51.000			

2301 NA35**-319568

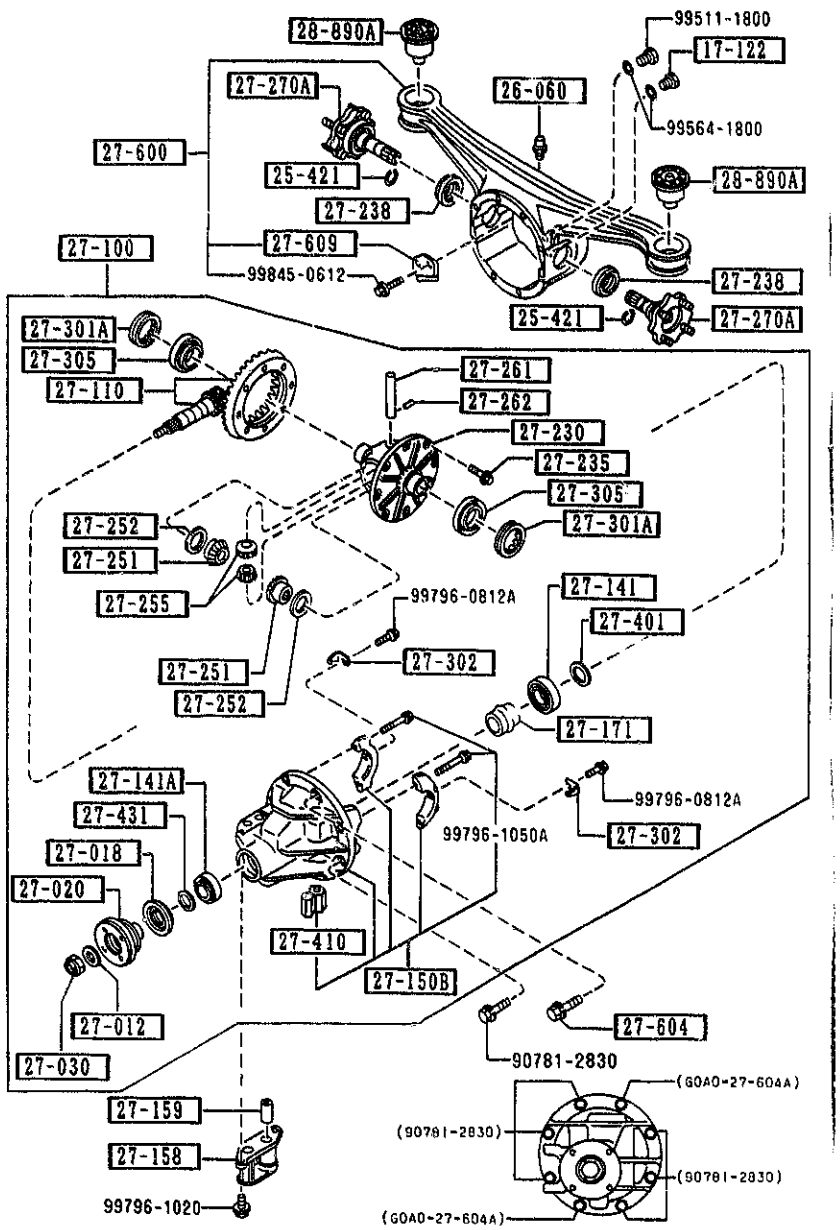

PART NO.	QTY	MODEL/RESTRICTION	MODEL/RESTRICTION	MODEL/RESTRICTION	FROM-TO
CONT'D					
*T027-27-410	1	L=51.025			
*T028-27-410	1	L=51.050			
27-431		SPACER			
T001-27-431	1				-2701
TA01-27-431	1				2701-
27-600		CASING,DIFFERENTIAL			
T020-27-600F A (T020-27-600G)	1				-2301
T020-27-600G	1				2301-
27-604		BOLT,CARRIER			
G0A0-27-604A	2				
27-609		PLATE,BAFFLE-DIFF CASING			
M0A1-27-609A	1				-0801
T025-27-609	1				0801-
28-890A		RUBBER,SUB FRAME MTG			
NA01-28-890	2				

0801 NA35**-205068
2301 NA35**-319568

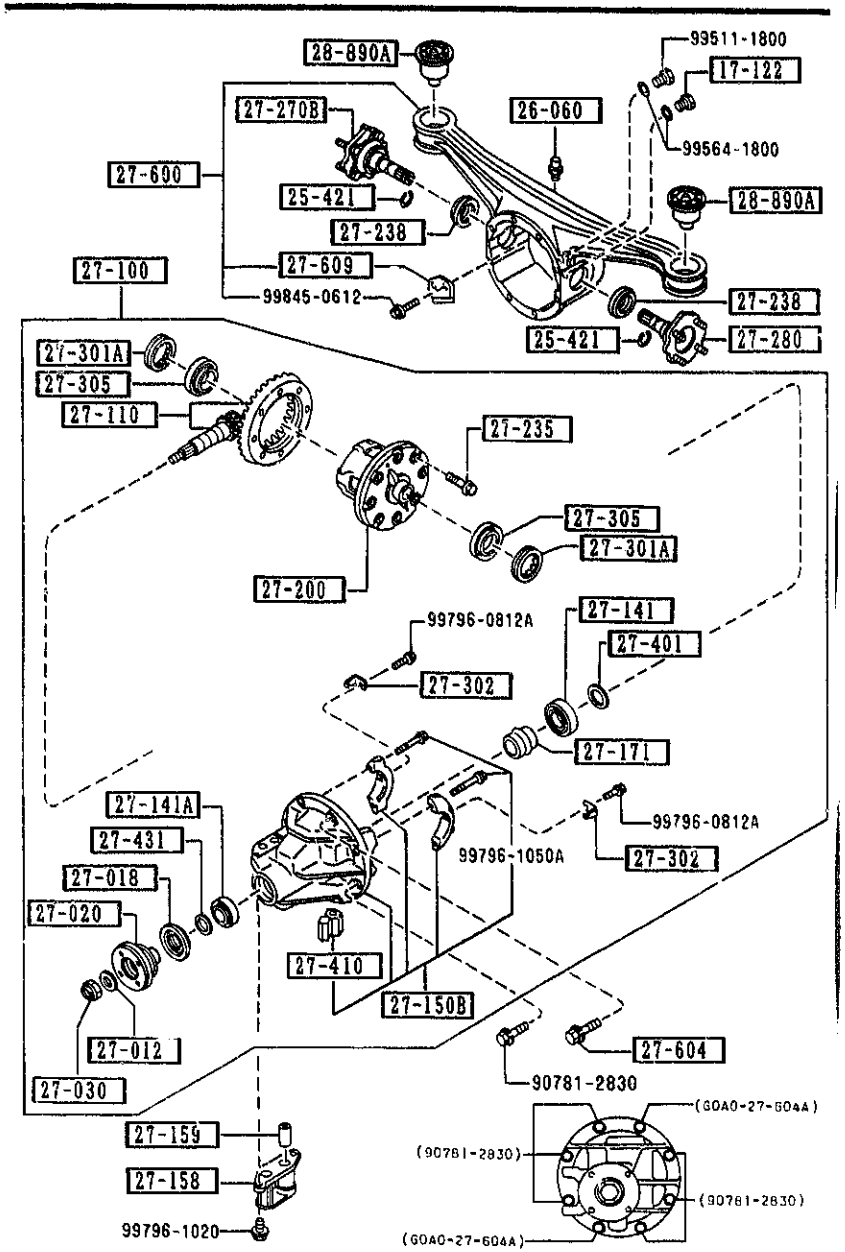

AUNA02

PART NO.	QTY	MODEL/RESTRICTION	MODEL/RESTRICTION	MODEL/RESTRICTION	FROM-TO
17-122		PLUG,MAGNET			
0810-17-121	1				
25-421		CLIP			
F001-25-421A	2				-2301
F002-25-421	2				2301-
26-060		BREATHER			
0730-26-060	1				
27-012		WASHER			
3919-27-012	1				
27-018		SEAL,OIL			
T020-27-165	1				
27-020		FLANGE,COMPANION			
T002-27-120B	1				
27-030		NUT,LOCK			
3919-27-130	1				
27-100		DRIVING & DIFF.			
T025-27-100J	1				-2301
T025-27-100L	1				2301-
27-110		GEAR SET,FINAL			
T020-27-110B C (T020-27-110C)	1	R=4.300			-2301
T020-27-110C	1	R=4.300			2301-
27-141		BEARING,PINION			
0755-27-210	1				
27-141A		BEARING,PINION			
3919-27-220	1				
27-150B		CARRIER,DIFFERENTIAL -FRT			
T020-27-150D A (T020-27-150E)	1				-2301

T020-27-110B
C T020-27-110C
T020-27-150E
T006-27-401
T006-27-402
T006-27-403
T006-27-404
T006-27-405
T006-27-406
T006-27-407
T006-27-408
T006-27-409
T006-27-411
T006-27-412
T006-27-413
T006-27-414

T006-27-415

2301 NA35**-319568

CAT. AUNA02-07

1993-12

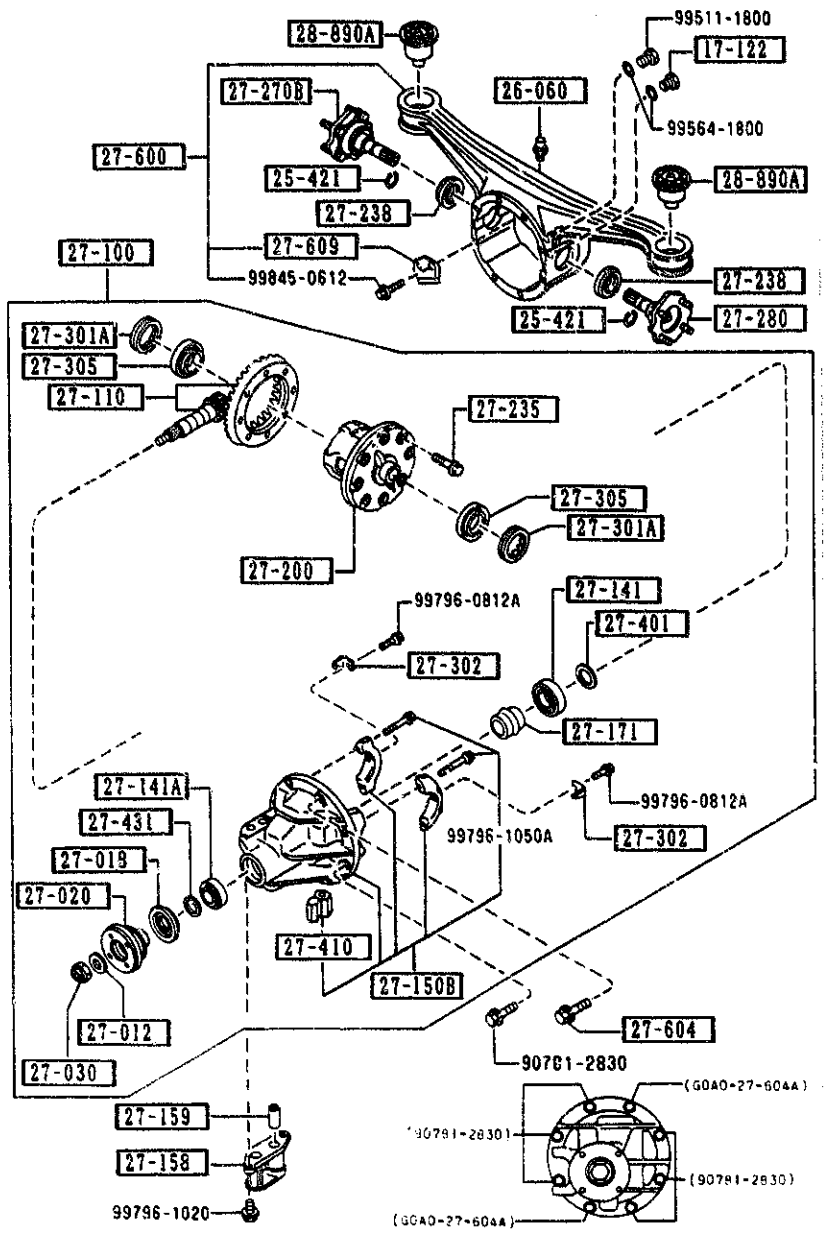

PART NO.	QTY	MODEL/RESTRICTION	MODEL/RESTRICTION	MODEL/RESTRICTION	FROM-TO
CONT'D					
T020-27-150E	1				2301-
27-158		SPACE			
T020-27-158A	1				
27-159		PIN,TUBULAR			
T020-27-159A	1				
27-171		PIECE,DISTANCE			
T020-27-171	1				
27-200		DIFFERENTIAL			
T016-27-200B	1				-2301
T016-27-200C	1				2301-
27-235		BOLT,RING GEAR			
3919-27-235	8	D=10.2MM			
3919-27-236	8	D=10MM			
27-238		SEAL,OIL			
T020-27-238	2				
27-270B		SHAFT(R),OUTPUT			
T015-27-270	1				-2301
T015-27-270A	1				2301-
27-280		SHAFT(L),OUTPUT			
T015-27-280	1				-2301
T015-27-280A	1				2301-
27-301A		SCREW,ADJUST			
0180-27-301A	2				
27-302		PLATE,LOCK			
0290-27-302	2				
27-305		BEARING			
0249-27-350	2				

2301 NA35**-319568

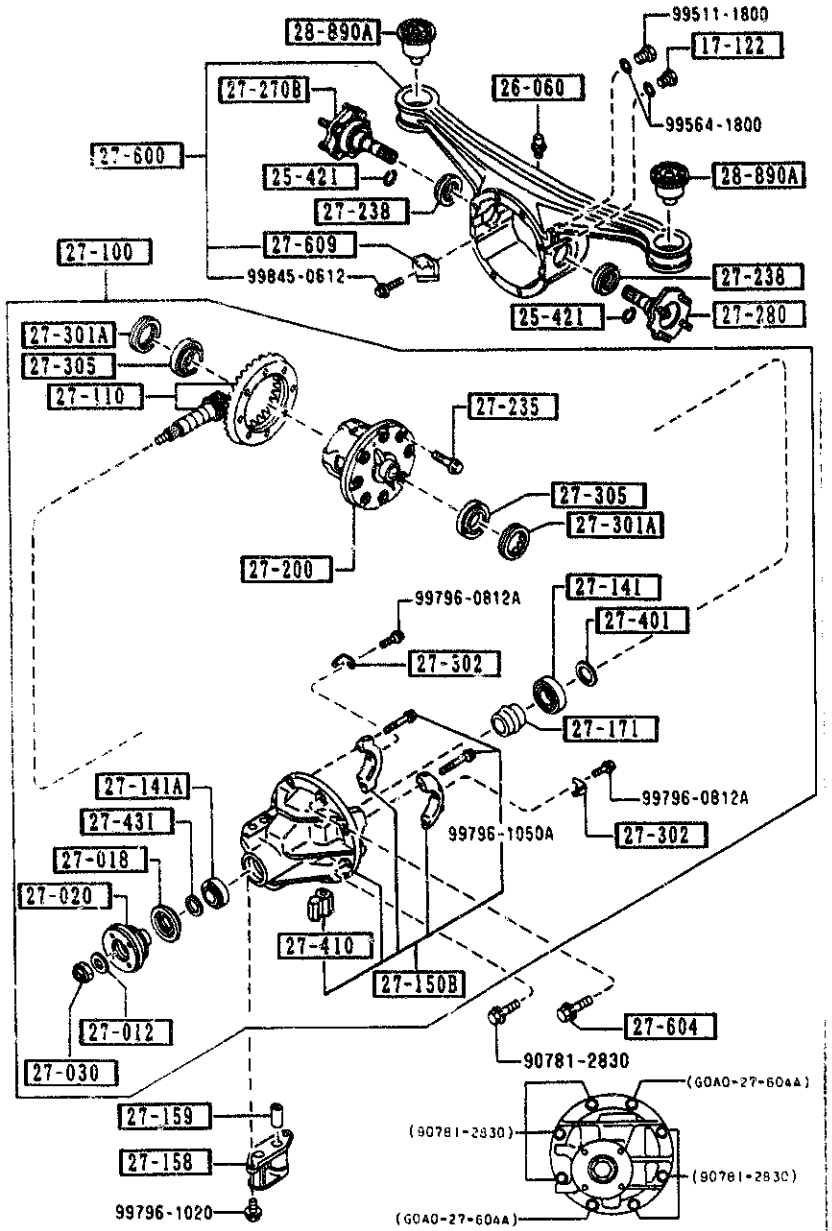

PART NO.	QTY	MODEL/RESTRICTION	MODEL/RESTRICTION	MODEL/RESTRICTION	FROM-TO
27-401		SPACER			
0259-27-401	1	T=3.08MM			-2301
0259-27-402	1	T=3.11MM			-2301
0259-27-403	1	T=3.14MM			-2301
0259-27-404	1	T=3.17MM			-2301
0259-27-405	1	T=3.2MM			-2301
0259-27-406	1	T=3.23MM			-2301
0259-27-407	1	T=3.26MM			-2301
0259-27-408	1	T=3.29MM			-2301
0259-27-409	1	T=3.32MM			-2301
0259-27-411	1	T=3.35MM			-2301
0259-27-412	1	T=3.38MM			-2301
0259-27-413	1	T=3.41MM			-2301
0259-27-414	1	T=3.44MM			-2301
0259-27-415	1	T=3.47MM			-2301
T006-27-401	1	T=2.08MM			2301-
T006-27-402	1	T=2.11MM			2301-
T006-27-403	1	T=2.14MM			2301-
T006-27-404	1	T=2.17MM			2301-
T006-27-405	1	T=2.2MM			2301-
T006-27-406	1	T=2.23MM			2301-
T006-27-407	1	T=2.26MM			2301-
T006-27-408	1	T=2.29MM			2301-

2301 NA35**-319568

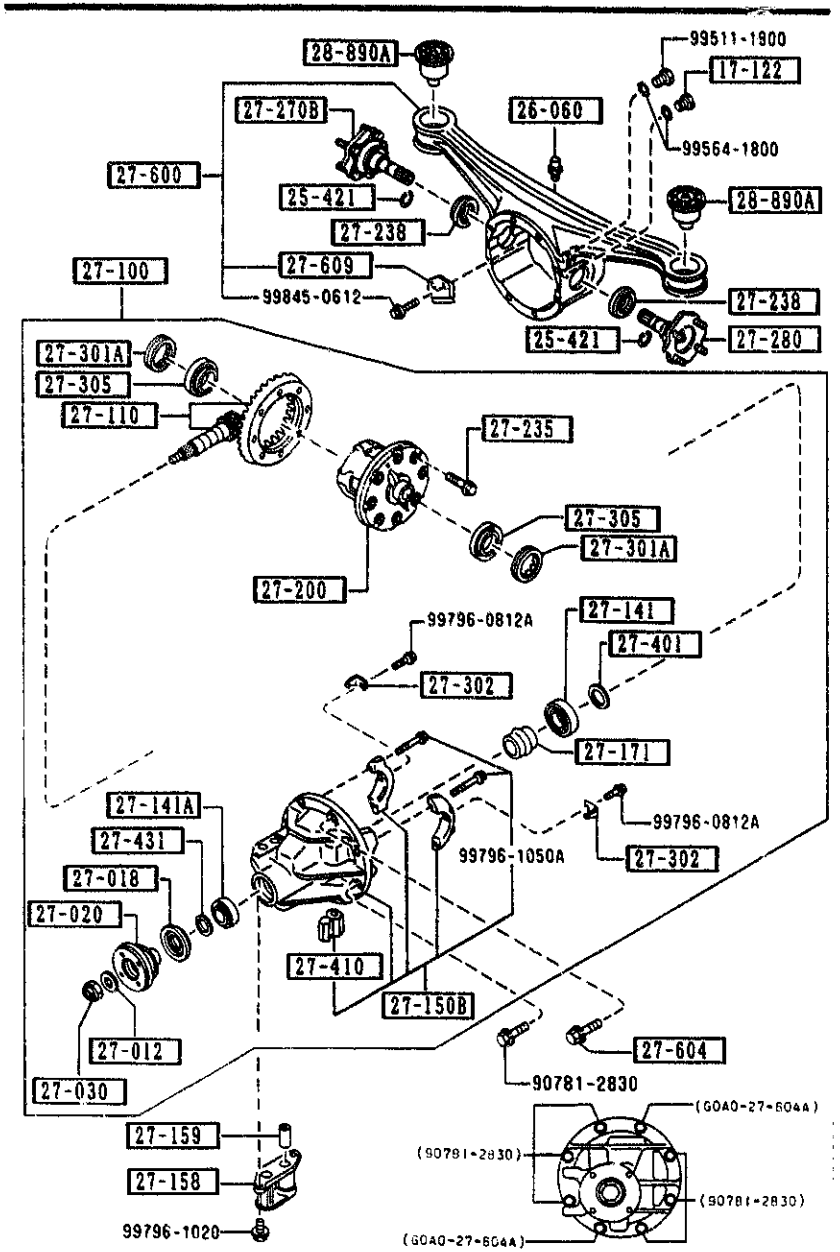

PART NO.	QTY	MODEL/RESTRICTION	MODEL/RESTRICTION	MODEL/RESTRICTION	FROM-TO
CONT'D					
T006-27-409	1	T=2.32MM			2301-
T006-27-411	1	T=2.35MM			2301-
T006-27-412	1	T=2.38MM			2301-
T006-27-413	1	T=2.41MM			2301-
T006-27-414	1	T=2.44MM			2301-
T006-27-415	1	T=2.47MM			2301-
| 27-410 |		SPACER			
*T020-27-410	1	L=50.850			
*T021-27-410	1	L=50.875			
*T022-27-410	1	L=50.900			
*T023-27-410	1	L=50.925			
*T024-27-410	1	L=50.950			
*T025-27-410	1	L=50.975			
*T026-27-410	1	L=51.000			
*T027-27-410	1	L=51.025			
*T028-27-410	1	L=51.050			
| 27-431 |		SPACER			
T001-27-431	1				-2701
TA01-27-431	1				2701-
| 27-600 |		CASING,DIFFERENTIAL			
T020-27-600F A (T020-27-600G)	1				-2301
T020-27-600G	1				2301-
| 27-604 |		BOLT,CARRIER			
G0A0-27-604A	2				

2301 NA35**-319568

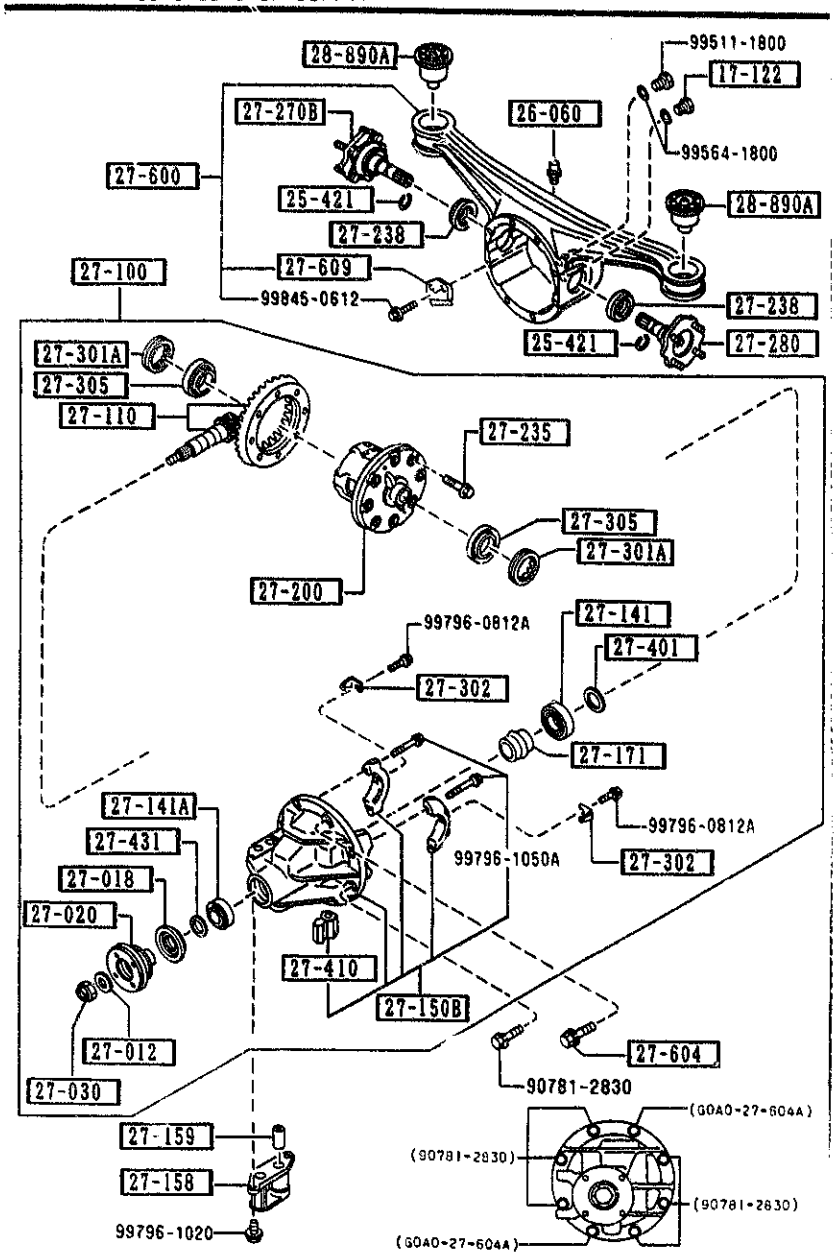

AUNA02

PART NO.	QTY	MODEL/RESTRICTION	MODEL/RESTRICTION	MODEL/RESTRICTION	FROM TO
27-609		PLATE,BAFFLE-DIFF CASING			
M0A1-27-609A	1				-0801
T025-27-609	1				0801-
28-890A		RUBBER,SUB FRAME MTG			
NA01-28-890	2				

0801 NA35**-205068

CAT. AUNA02-07 1993-12

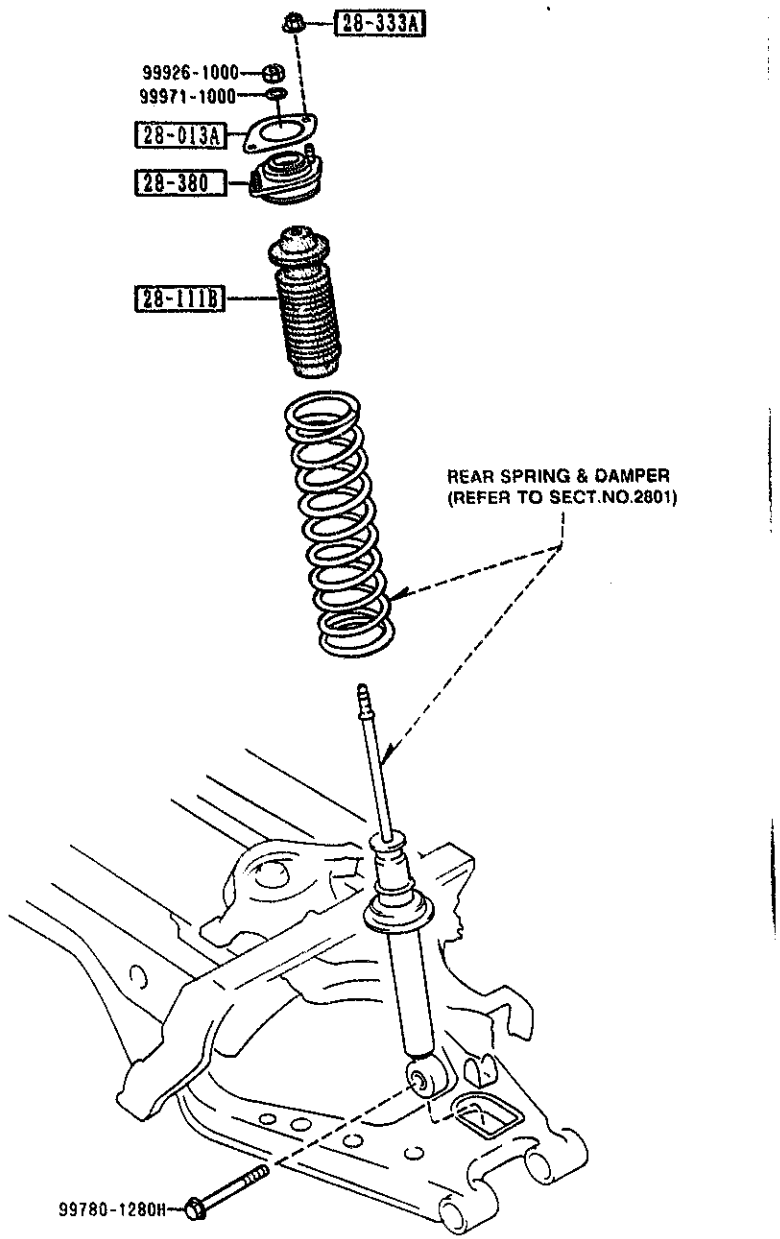

PART NO.	QTY	MODEL/RESTRICTION	MODEL/RESTRICTION	MODEL/RESTRICTION	FROM-TO
28-013A G030-28-013A	2	SHEET,RUBBER			
28-111B NA01-28-111	2	STOPPER,BUMP			
28-333A H001-28-333	4	NUT,FLANGE			
28-380 NA01-28-380A A (NA01-28-380B)	2	RUBBER,MOUNTING			-2310
NA01-28-380B	2				2310-

2310 NA35✱✱-319561

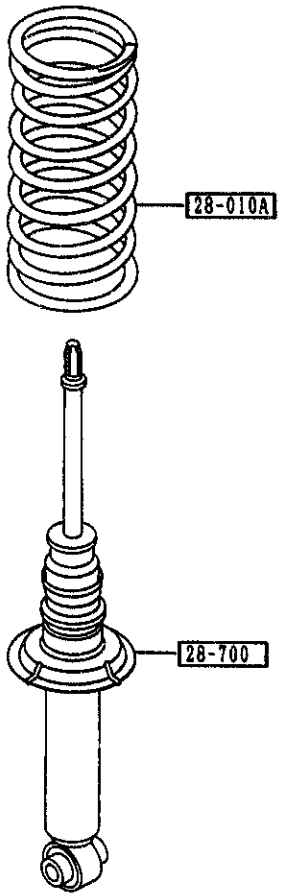

2801 -1 * REAR SPRING & DAMPER

PART NO.	QTY	MODEL/RESTRICTION	MODEL/RESTRICTION	MODEL/RESTRICTION	FROM-TO
28-010A		SPRING,COIL-REAR			
NA01-28-011B A (NA01-28-011C)	2				-1C01
NA03-28-011 A (NA03-28-011A)	2				-1C01
NA01-28-011C	2	(MT)			1C01-
NA03-28-011A	2	(AT)			1C01-
28-700		DAMPER,REAR			
NA01-28-700	2				

1C01 NA35**-309801

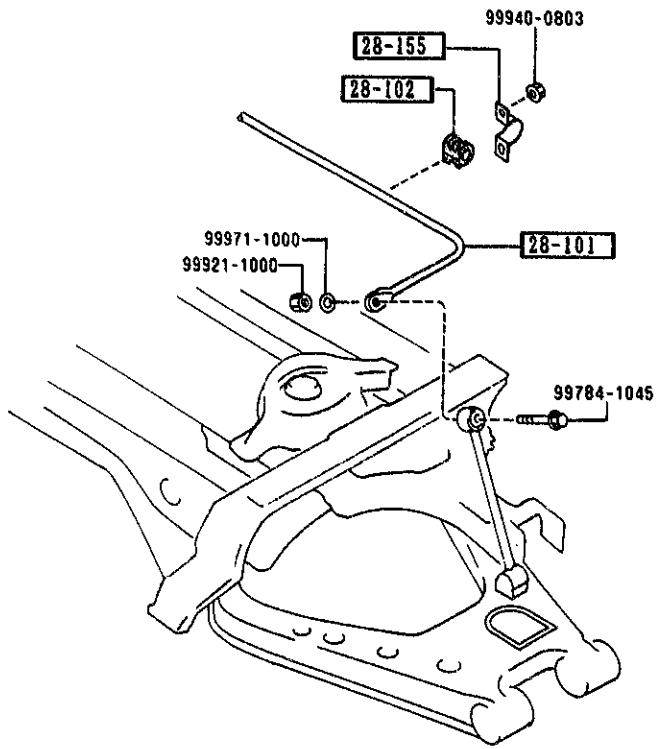

PART NO.	QTY	MODEL/RESTRICTION	MODEL/RESTRICTION	MODEL/RESTRICTION	FROM-TO
28-101		STABILIZER,RR			
NA01-28-151A	1				
28-102		BUSH,STABILIZER-RR			
FB01-28-156	2				
28-155		PLATE,STABILIZER-RR			
FB01-28-155	2				

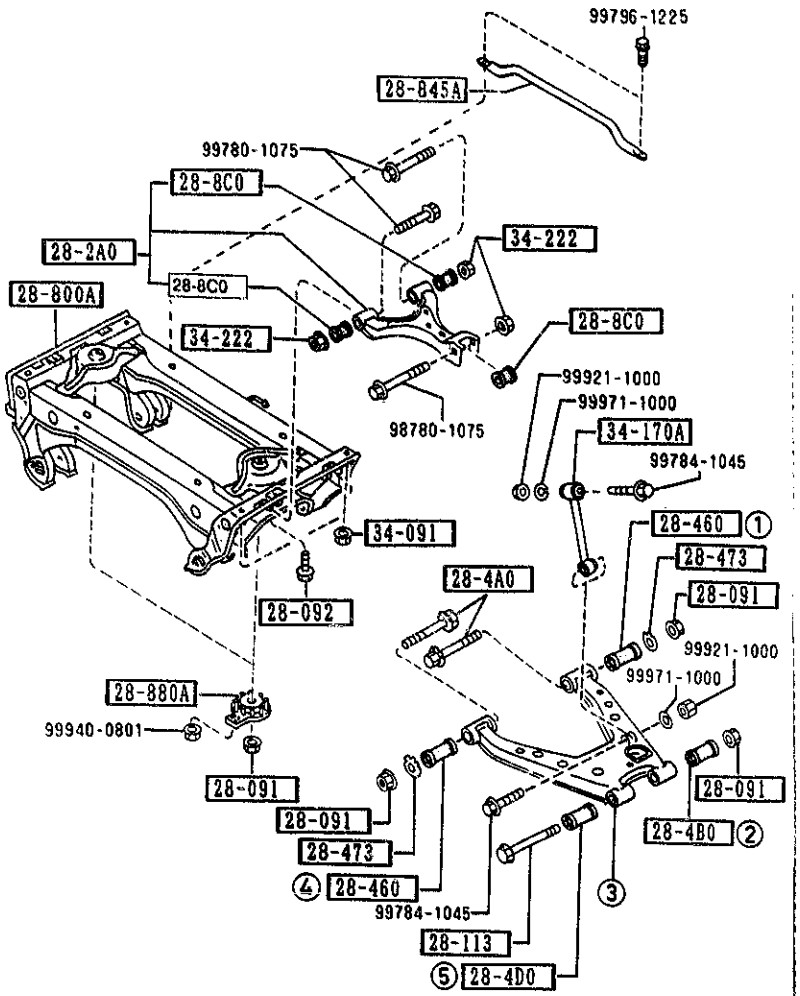

NOTE

① ... ⑤ ⇨ 28-300 28-300Z

THE D-CODE OF 28-300 28-300Z CONSISTS OF FIGURE NUMBERS ① THROUGH ⑤.

PART NO.	QTY	MODEL/RESTRICTION	MODEL/RESTRICTION	MODEL/RESTRICTION	FROM-TO
28-091 B037-28-091	8	NUT			
28-092 NA01-28-092	2	BOLT,CONTROL LINK			
28-113 NA01-28-113	2	BOLT			
28-2A0 NA01-28-2A0B	2	ARM,UPPER-REAR			
28-300 NA01-28-300	1	ARM(R),LOWER-REAR			
28-300Z NA01-28-350	1	ARM(L),LOWER-REAR			
28-4A0 NA01-28-4A0	4	BOLT,ADJUST			
28-4B0 NA01-28-4B0	2	BUSHING,RUBBER-LOWER ARM			
28-4D0 NA01-28-4D0	2	BUSHING,RUBBER-LOWER ARM			
28-460 NA01-28-460	4	BUSHING,LOWER ARM			
28-473 NA01-28-473	4	PLATE,CAM-SUB FRAME			
28-8C0 NA01-28-8C0B	6	BUSHING,RUBBER			
28-800A NA23-28-800	1	MEMBER,CROSS			-1801
N007-28-800C A (N007-28-800D)	1				1801-2101
N007-28-800D	1				2101-

1801 NA35**-235561
2101 NA35**-313937

2830 REAR LOWER ARMS & SUB FRAME

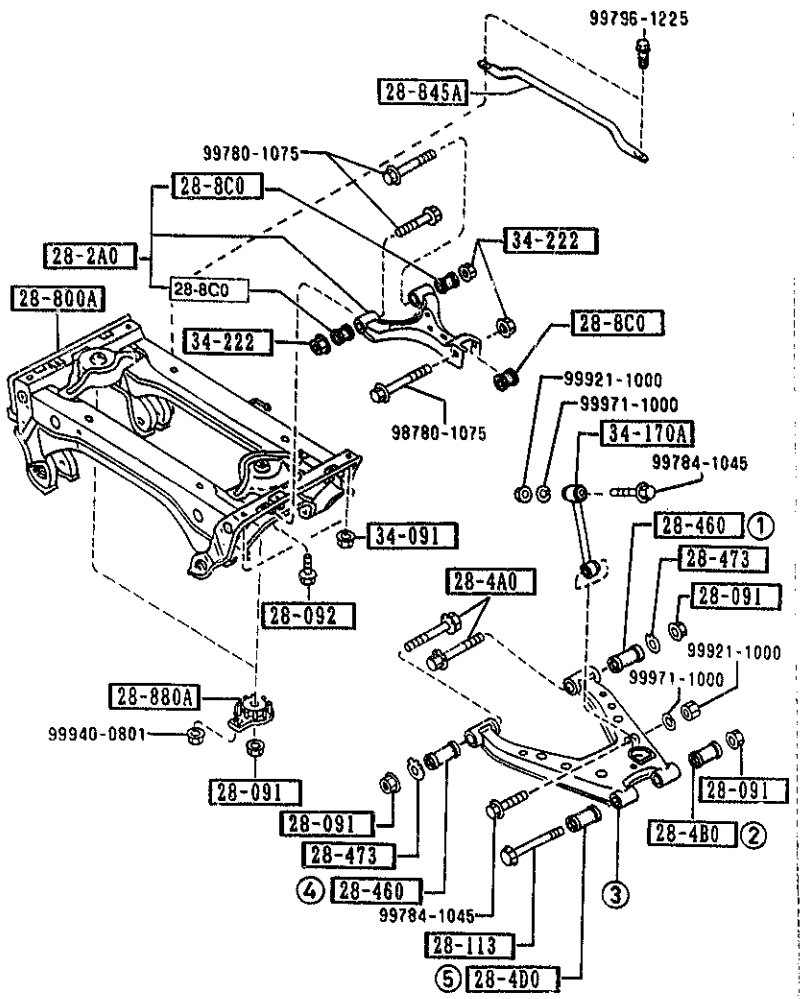

NOTE

① ... ⑤ ⇨ 28-300 28-300Z

THE D-CODE OF 28-300 28-300Z CONSISTS OF FIGURE NUMBERS ①THROUGH⑤.

PART NO.	QTY	MODEL/RESTRICTION	MODEL/RESTRICTION	MODEL/RESTRICTION	FROM-TO
28-845A		BAR,REAR SUSPENSION			
N007-28-845A	1				1801-
28-880A		WASHER,STOP			
NA01-28-880B	2				
34-091		NUT			
FB01-34-091	4				
34-170A		LINK,CONTROL-STAB			
NA01-34-170	2				
34-222		NUT			
8871-34-222	6				

1801 NA35**-235561

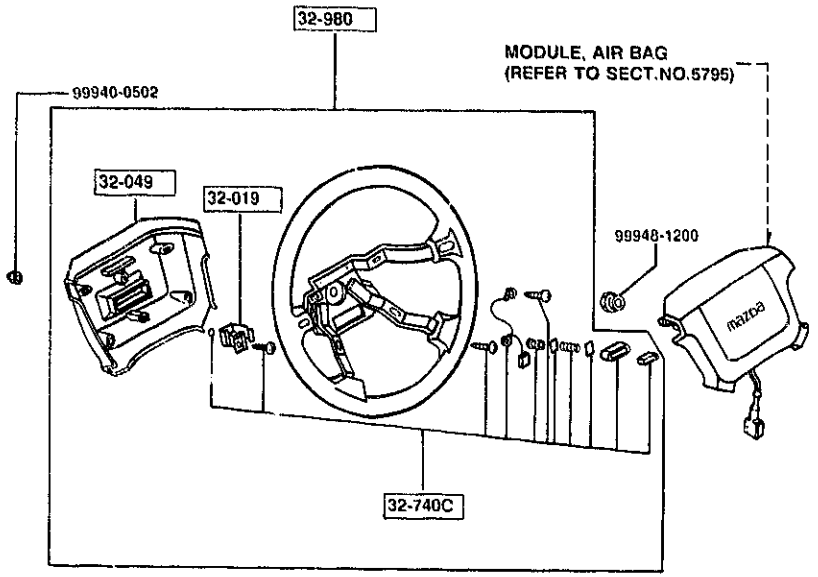

3200 -1 * STEERING WHEEL

PART NO.	QTY	MODEL/RESTRICTION	MODEL/RESTRICTION	MODEL/RESTRICTION	FROM-TO
32-019		BRACKET,COUPLER			
NA01-32-019	1				
32-049		COVER,WHEEL CORE			
NA01-32-049	1				
32-740C		PARTS SET,ST. WHEEL			
NA01-32-750	1				
32-980		BOSS,STEERING WHEEL			
NA01-32-980B A (NA01-32-980C)	1				-2417
NA02-32-980B A (NA02-32-980C)	1				-2417
*NA01-32-980C	1	BASE, (URETHANE)			2417-
*NA02-32-980C	1	PKG-OPT, V-SPECIAL, (LEATHER)			2417-

2417 NA35**-324605

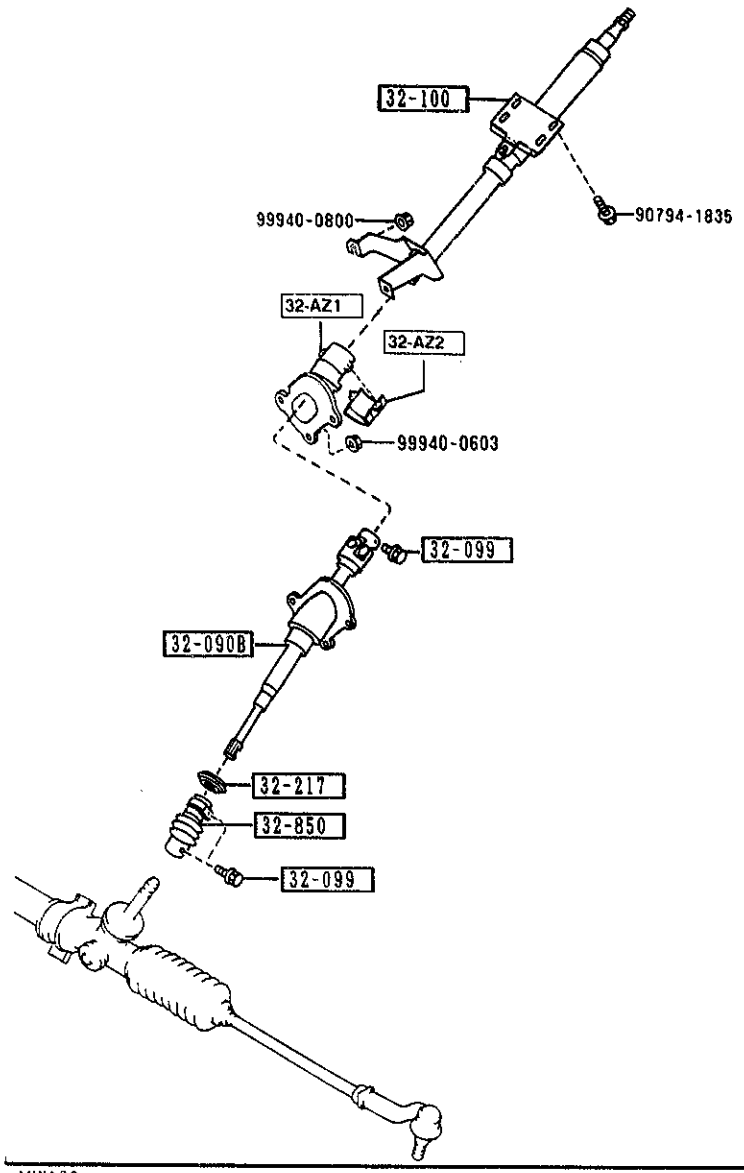

AUNA02

3210 -1 * STEERING COLUMN & SHAFTS

PART NO.	QTY	MODEL/RESTRICTION	MODEL/RESTRICTION	MODEL/RESTRICTION	FROM-TO
32-AZ1		COVER,JOINT-UPPER			
NA01-32-AZ1B	1				
32-AZ2		COVER,JOINT-LOWER			
NA01-32-AZ2A	1				
32-090B		SHAFT,INTERMED.			
NA01-32-090B	1	(W/O P.S.)			-1C01
NA02-32-090B	1	(W/P.S.)			-1C01
NA01-32-090C	1	(W/O P.S.)			1C01-
NA02-32-090C	1	(W/P.S.)			1C01-
32-099		BOLT,SHAFT			
B455-32-099	3				
32-100		SHAFT,ENGY.ABSORBER			
NA01-32-100B	1				
32-217		GROMMET			
NA01-32-217	1				
32-850		JOINT,STEERING			
NA01-32-850	1				-1C01
NA01-32-850A	1				1C01-

1C01 NA35**-309801

CAT. AUNA02-07 1993-12

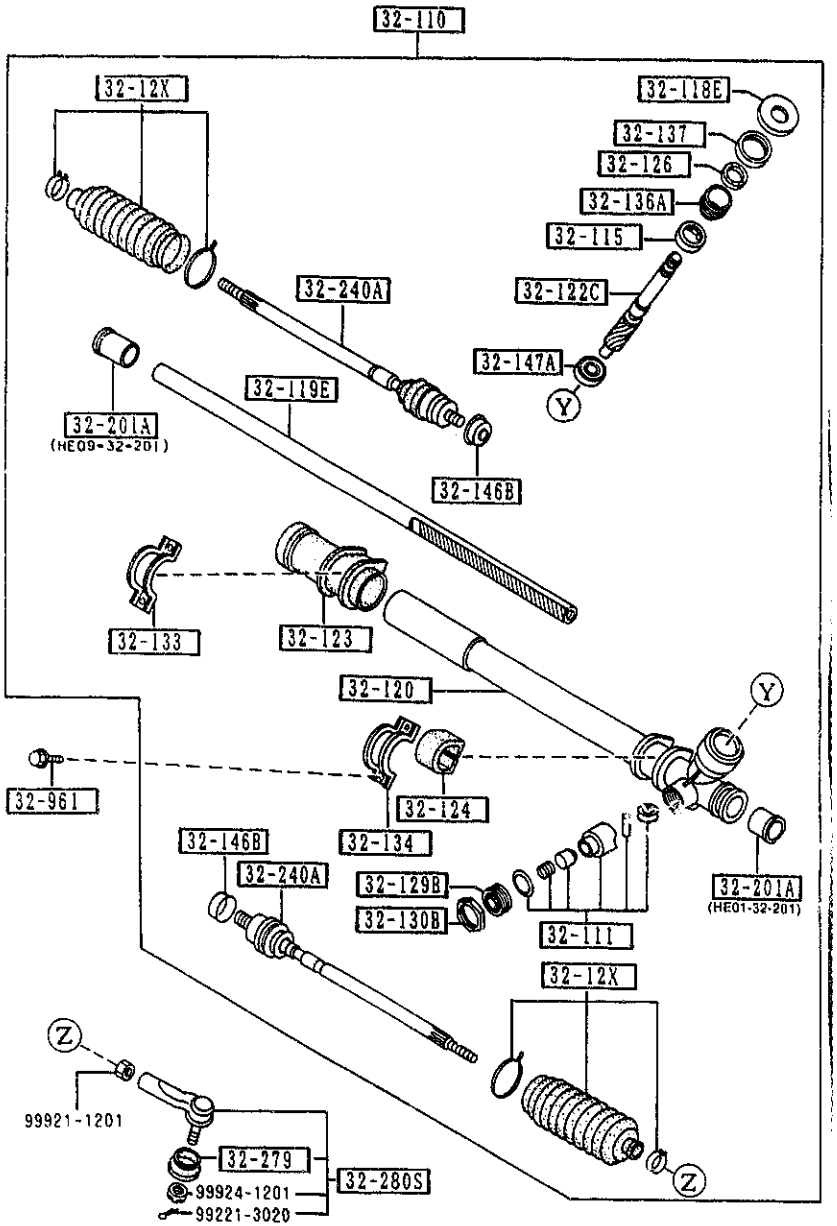

AUNA02

3220 -1 STEERING GEAR
(W/O POWER STEERING)

PART NO.	QTY	MODEL/RESTRICTION	MODEL/RESTRICTION	MODEL/RESTRICTION	FROM-TO
32-110		GEAR,STEERING			
NA01-32-110	1				
32-111		YOKE,SUPPORT			
GJ21-32-111	1				
32-115		BEARING,ST. GEAR			
G030-32-115	1				
32-118E		COVER,DUST-ST. GEAR			
NA01-32-118	1				
32-119E		RACK,STEERING GEAR			
NA01-32-119	1				
32-12X		BOOT SET,ST. GEAR			
NA01-32-12X	2				
32-120		HOUSING,GEAR			
NA01-32-120	1				
32-122C		PINION,STEERING GEAR			
NA01-32-122	1				
32-123		RUBBER,MOUNTING			
NA01-32-123	1				
32-124		RUBBER,MOUNTING			
NA01-32-124	1				
32-126		SEAL,SHAFT			
G030-32-126	1				
32-129B		PLUG,PINION			
HE01-32-129	1				
32-130B		NUT,LOCK			
S083-32-137	1				
32-133		PLATE,CLAMP			
BC51-32-133	1				

3220 STEERING GEAR
(W/O POWER STEERING)

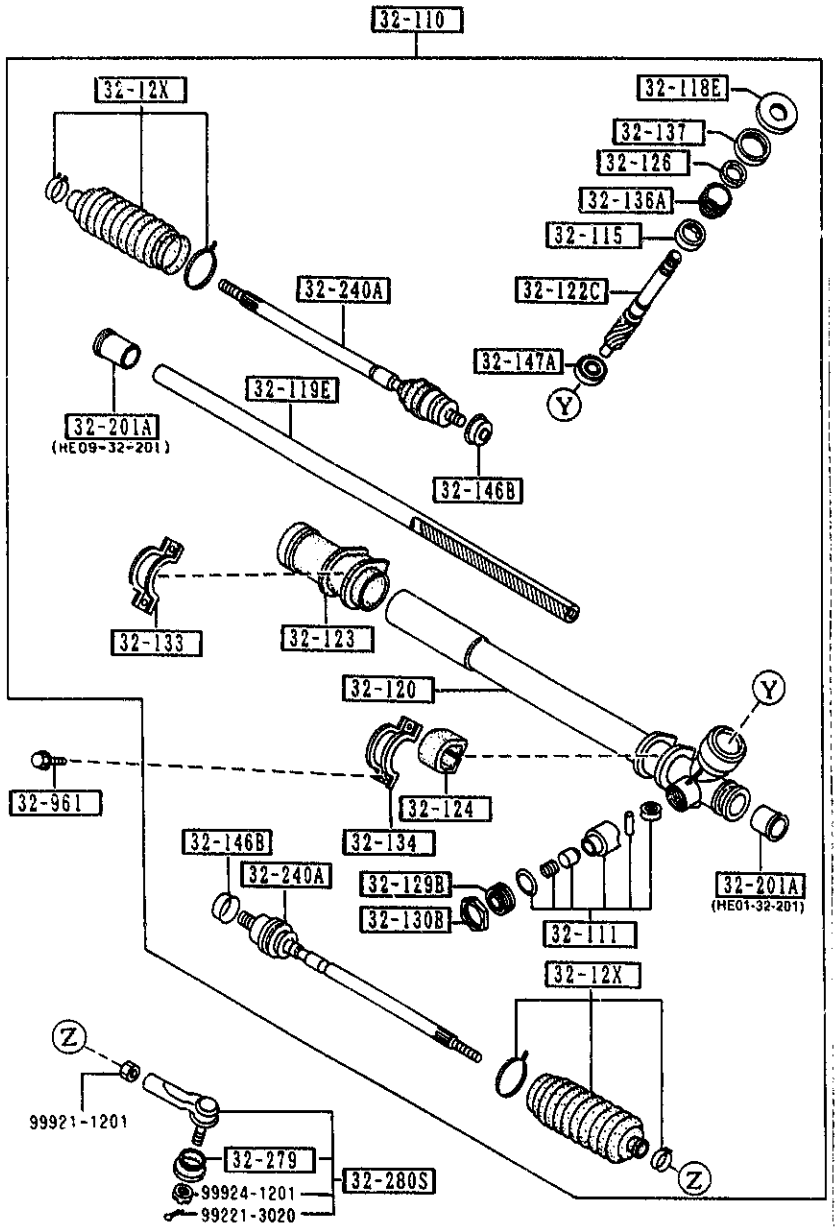

AUNA02

3220 -2 * STEERING GEAR
(W/O POWER STEERING)

PART NO.	QTY	MODEL/RESTRICTION	MODEL/RESTRICTION	MODEL/RESTRICTION	FROM TO
32-134		PLATE,CLAMP			
NA01-32-134	1				
32-136A		COVER,REAR			
G030-32-136	1				
32-137		NUT,LOCK			
S030-32-137	1				
32-146B		WASHER			
HA14-32-146	2				
32-147A		BEARING,PINION			
G030-32-147	1				
32-201A		BUSHING,RACK-ST. GEAR			
HE01-32-201	1				
HE09-32-201	1				
32-240A		JOINT,BALL			
NA01-32-240	2				
32-279		SEAL,DUST-BALL JOINT			
B455-32-279	2				
32-280S		JOINT SET,BALL			
8AN1-32-280	2				
32-961		BOLT			
G030-32-961	4				

CAT. AUNA02-07

1993-12

3220 A STEERING GEAR
(W/ POWER STEERING)

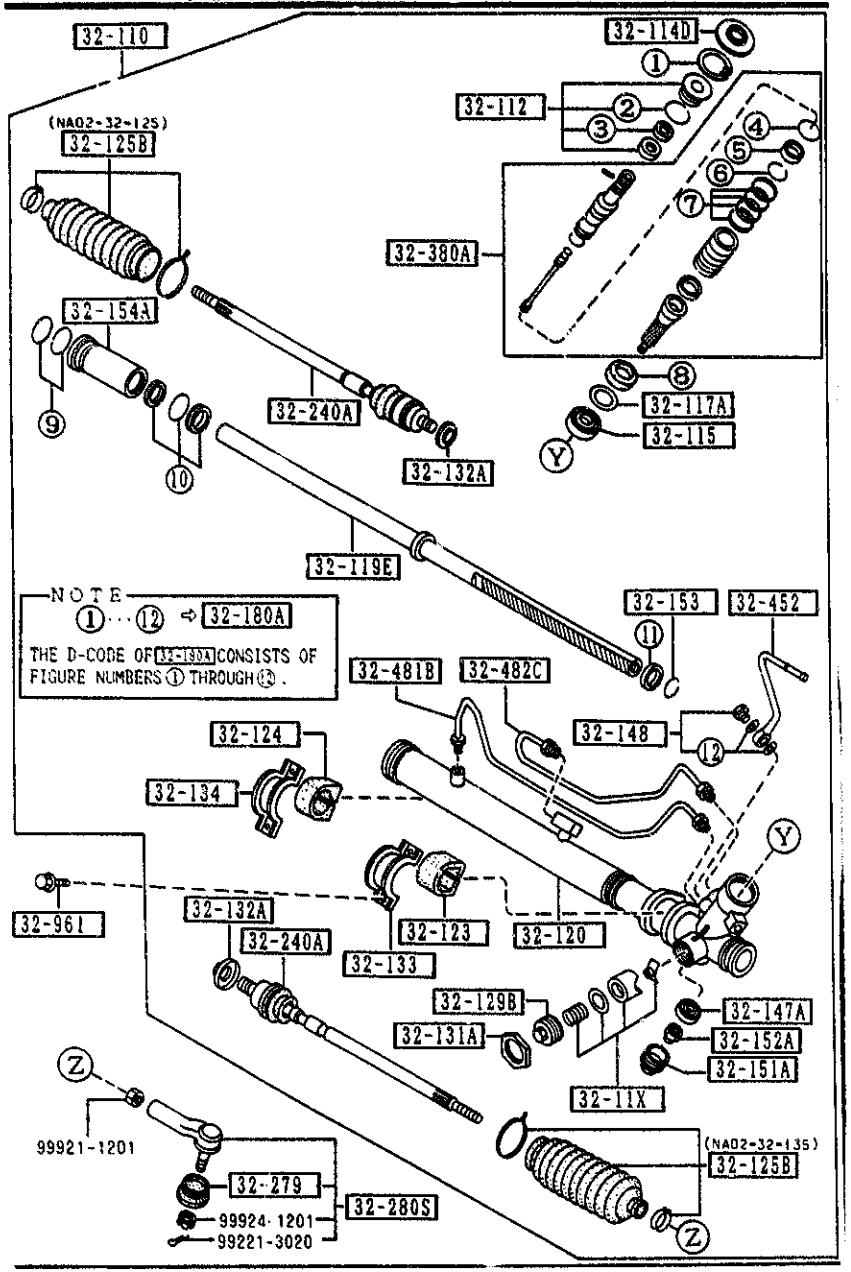

AUNA02

3220 A-1 STEERING GEAR
(W/ POWER STEERING)

PART NO.	QTY	MODEL/RESTRICTION	MODEL/RESTRICTION	MODEL/RESTRICTION	FROM-TO
32-11X NA02-32-11X	1	YOKE SET,SUPPORT-ST. GEAR			
32-110 NA02-32-110	1	GEAR,STEERING			
32-112 NA02-32-112	1	COVER,DUST			
32-114D NA02-32-114	1	COVER,DUST-ST. GEAR			
32-115 NA02-32-115	1	BEARING,ST. GEAR			
32-117A NA02-32-121	1	SPACER,STEERING GEAR			
32-119E NA02-32-119	1	RACK,STEERING GEAR			
32-120 NA02-32-120	1	HOUSING,GEAR			
32-123 NA02-32-123	1	RUBBER,MOUNTING			
32-124 NA02-32-124	1	RUBBER,MOUNTING			
32-125B NA02-32-125	1	BOOT,RACK			
NA02-32-135	1				
32-129B NA02-32-129	1	PLUG,PINION			
32-131A NA02-32-131	1	NUT,LOCK-RACK			

CAT. AUNA02-07

1993-12

3220 A STEERING GEAR
(W/ POWER STEERING)

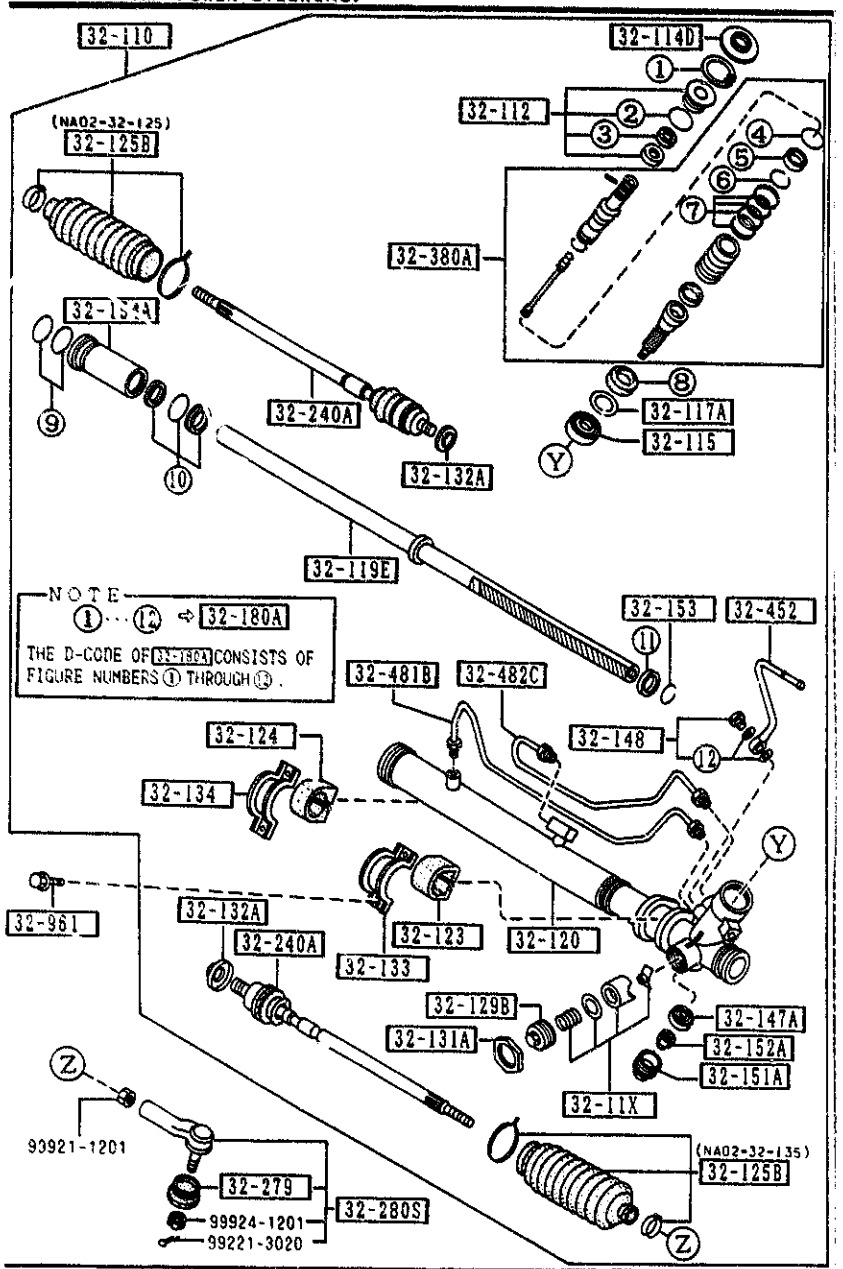

AUNA02

3220 A-2 STEERING GEAR
(W/ POWER STEERING)

PART NO.	QTY	MODEL/RESTRICTION	MODEL/RESTRICTION	MODEL/RESTRICTION	FROM-TO
32-132A NA02-32-126	2	WASHER			
32-133 NA02-32-133	1	PLATE,CLAMP			
32-134 NA02-32-134	1	PLATE,CLAMP			
32-147A NA02-32-147	1	BEARING,PINION			
32-148 C002-32-148	1	EYE BOLT KIT,ST. GEAR			
32-151A NA02-32-151	1	PLUG,PINION-ST.GEAR			
32-152A NA02-32-152	1	NUT,ADJUST			
32-153 NA02-32-153	1	RING,BACK UP			
32-154A NA02-32-154	1	HOLDER,STEERING GEAR			
32-180A NA02-32-180	1	SEAL KIT,ST. GEAR			
32-240A NA02-32-240	2	JOINT,BALL			
32-279 B455-32-279	2	SEAL,DUST-BALL JOINT			
32-280S 8AN1-32-280	2	JOINT SET,BALL			
32-380A NA02-32-380	1	VALVE,ST. GEAR			

CAT. AUNA02-07

1993-12

3220 A STEERING GEAR
(W/ POWER STEERING)

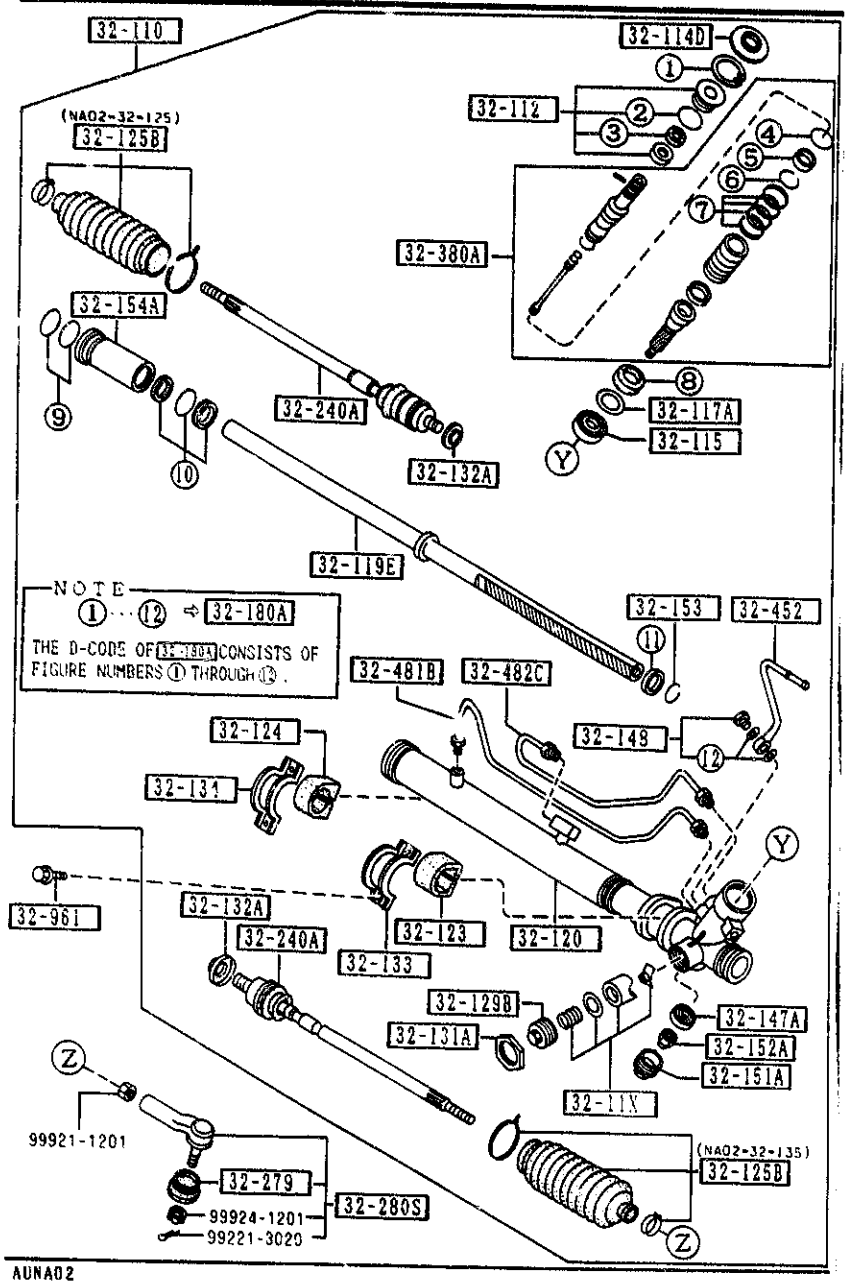

AUNA02

3220 A-3 * STEERING GEAR
(W/ POWER STEERING)

PART NO.	QTY	MODEL/RESTRICTION	MODEL/RESTRICTION	MODEL/RESTRICTION	FROM-TO
32-452		PIPE'B',ST. GEAR			
NA02-32-452	1				
32-481B		PIPE'A',CYLINDER			
NA02-32-481	1				
32-482C		PIPE'B',CYLINDER			
NA02-32-482	1				
32-961		BOLT			
G030-32-961	4				

CAT. AUNA02-07

1993-12

3240 POWER STEERING SYSTEM

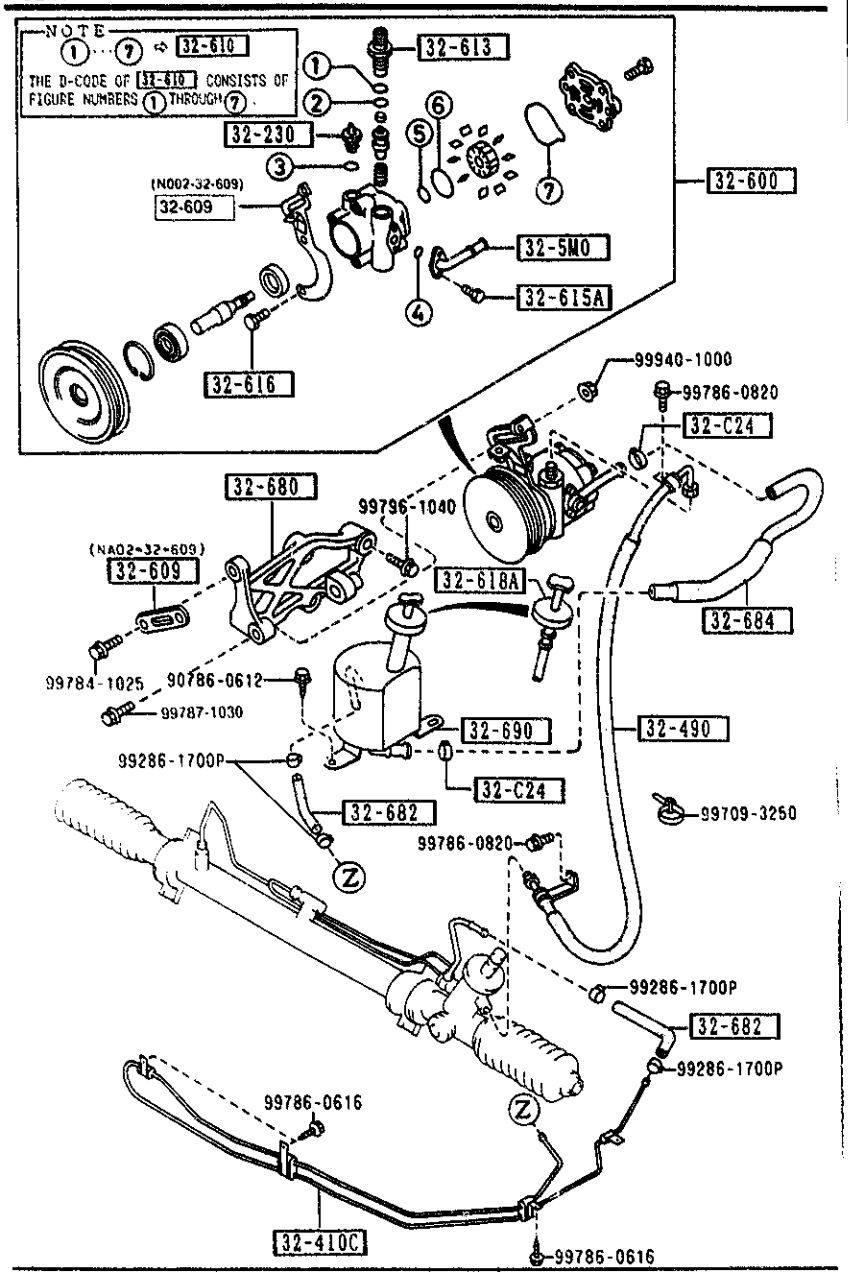

AUNA02

PART NO.	QTY	MODEL/RESTRICTION	MODEL/RESTRICTION	MODEL/RESTRICTION	FROM-TO
32-C24 G238-32-C24	2	CLAMP,HOSE-P.S.			
32-230 B456-32-230	1	SENSOR,STEERING PRESSURE			
32-410C NA02-32-410A	1	PIPE,RETURN			
32-490 NA02-32-490B A (NA02-32-490C)	1	HOSE,PRESSURE			-1301
NA02-32-490C	1				1301-
32-5M0 N002-32-5M0	1	PIPE,SUCTION			
32-600 N002-32-600B	1	PUMP,VANE			
32-609 NA02-32-609	1	BRACKET,VANE PUMP KUROISHI TEKKO			
N002-32-609	1	NIHON POWER STEERING			
32-610 N002-32-610	1	SEAL KIT,VANE PUMP			
32-613 N002-32-613	1	NIPPLE,VANE PUMP			
32-615A B456-32-615	2	BOLT			
32-616 B456-32-616	2	BOLT,VANE PUMP			
32-618A NA02-32-691	1	CAP,VANE PUMP TANK			

1301 NA35**-231464

CAT. AUNA02-07

1993-12

3240 POWER STEERING SYSTEM

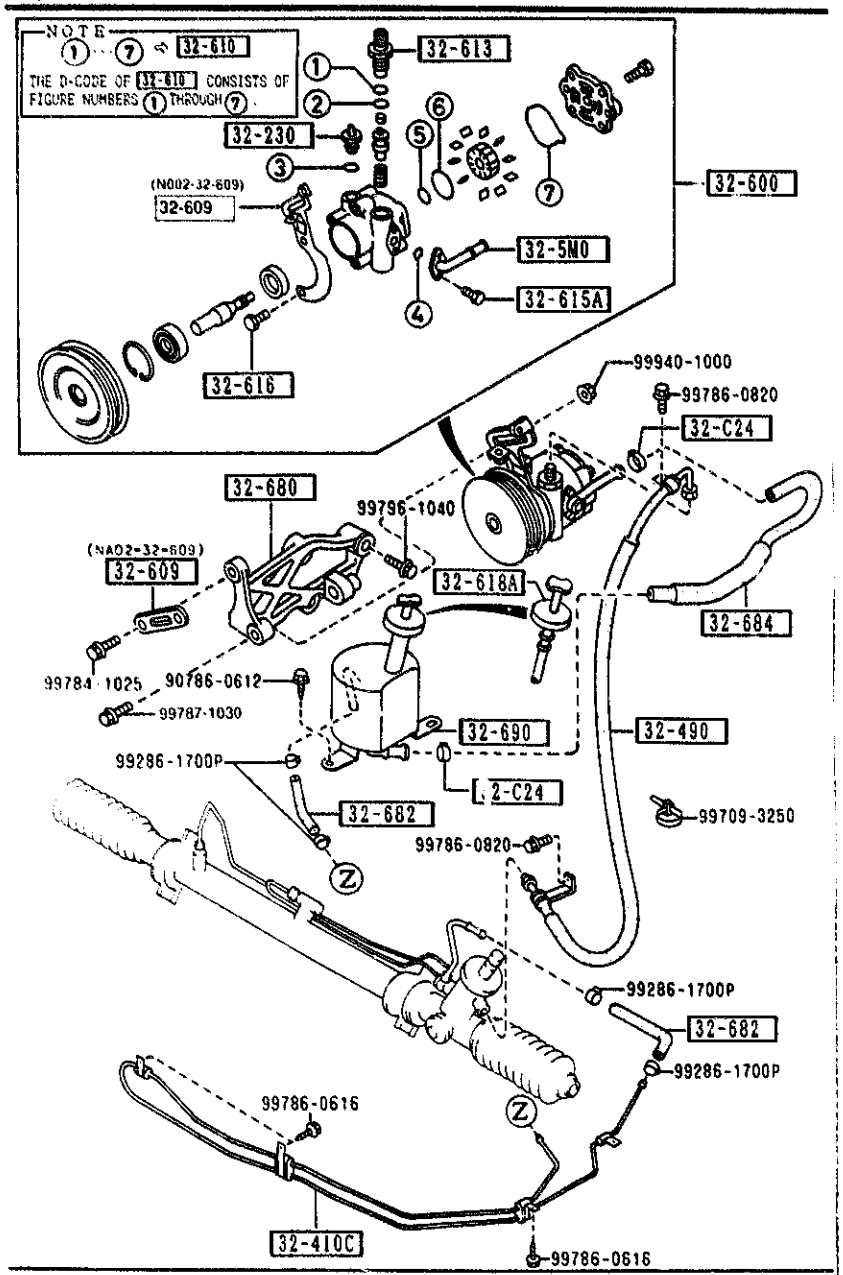

PART NO.	QTY	MODEL/RESTRICTION	MODEL/RESTRICTION	MODEL/RESTRICTION	FROM-TO
32-680		BRACKET,VANE PUMP			
NA02-32-680	1				
32-682		HOSE,RETURN			
NA02-32-682	2				
32-684		HOSE,RETURN			
NA02-32-684B	1				
32-690		TANK,VANE PUMP			
NA02-32-690A	1				

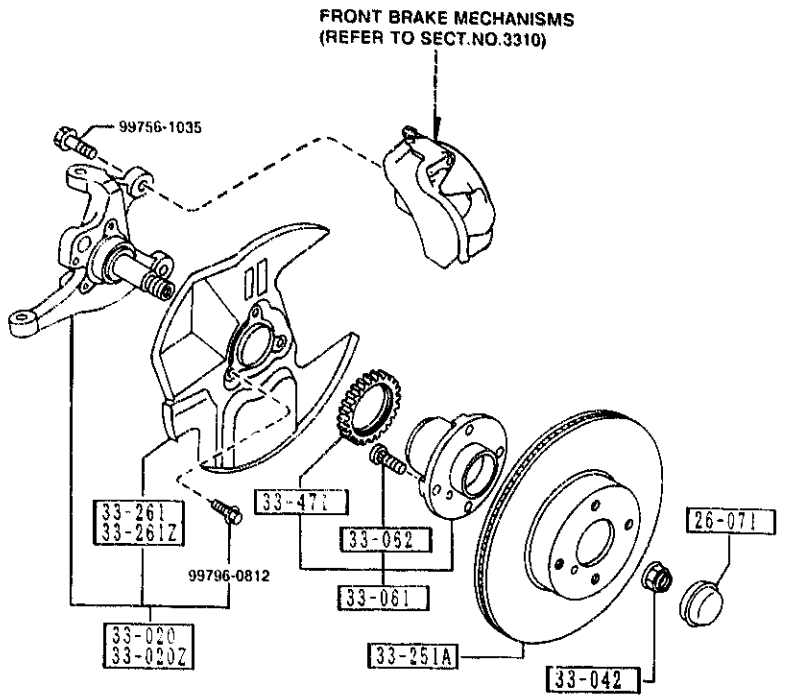

3300 -1 * FRONT AXLE

PART NO.	QTY	MODEL/RESTRICTION	MODEL/RESTRICTION	MODEL/RESTRICTION	FROM-TO
26-071		CAP,HUB			
B455-26-071	2				
33-020		KNUCKLE(R),STEERING			
NA01-33-020A	1	(W/O A.LOCK BRAKE)			
NA23-33-021A	1	(A.LOCK BRAKE)			
33-020Z		KNUCKLE(L),STEERING			
NA01-33-030A	1	(W/O A.LOCK BRAKE)			
NA23-33-031A	1	(A.LOCK BRAKE)			
33-042		NUT			
NA01-33-042A (NA01-33-042B)	2	W/WASHER			-0820
NA01-33-042B	2	W/WASHER			0820-
33-061		HUB,WHEEL			
NA01-33-04X	2	(W/O A.LOCK BRAKE)			
NA23-33-04XA	2	(A.LOCK BRAKE)			
33-062		BOLT,HUB			
B455-33-062	8				
33-251A		PLATE,DISC			
NA01-33-25X	2				
33-261		COVER(R),DUST			
NA01-33-261	1	(W/O A.LOCK BRAKE)			
NA23-33-261	1	(A.LOCK BRAKE)			
33-261Z		COVER(L),DUST			
NA01-33-271	1	(W/O A.LOCK BRAKE)			
NA23-33-271	1	(A.LOCK BRAKE)			
33-471		ROTOR,SENSOR-FRT A.B.S.			
NA23-33-471B	2				

0820 NA35**-206394

3310 -1 FRONT BRAKE MECHANISMS

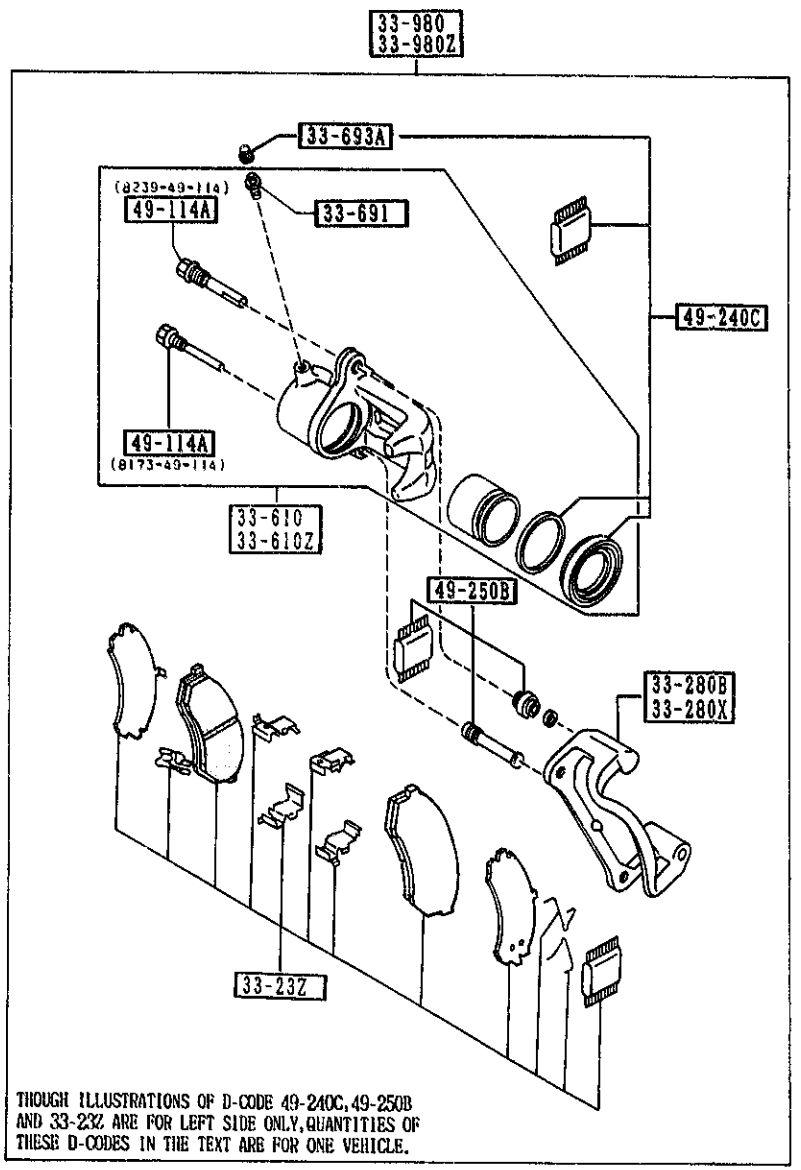

THOUGH ILLUSTRATIONS OF D-CODE 49-240C, 49-250B AND 33-23Z ARE FOR LEFT SIDE ONLY, QUANTITIES OF THESE D-CODES IN THE TEXT ARE FOR ONE VEHICLE.

PART NO.	QTY	MODEL/RESTRICTION	MODEL/RESTRICTION	MODEL/RESTRICTION	FROM-TO
33-23Z		PAD SET,FRT CALIPER			
NAY0-33-23ZA	1	NON ASBESTOS			-1801
NOY1-33-23Z	1				1801-
33-280B		SUPPORT(R),MOUNTING			
NA01-33-281	1				
33-280X		SUPPORT(L),MOUNTING			
NA01-33-291	1				
33-610		BODY & PISTON(R),CALIPER			
NA01-33-61X	1				
33-610Z		BODY & PISTON(L),CALIPER			
NA01-33-71X	1				
33-691		SCREW,BLEEDER			
B001-33-691	2				
33-693A		CAP,BLEEDER SCREW			
0259-33-693	2				
33-980		CALIPER(R),FRT BRAKE			
NA10-33-980A (NA10-33-980C)	1				-0C25
NA10-33-980C	1				0C25-1801
N001-33-980	1				1801-
33-980Z		CALIPER(L),FRT BRAKE			
NA10-33-990A (NA10-33-990C)	1				-0C25
NA10-33-990C	1				0C25-1801
N001-33-990	1				1801-
49-114A		PIN,SLIDER			
8173-49-114	2				
8239-49-114	2				
49-240C		SEAL KIT,CALIPER-FRT			
NAY1-33-24Z	1				

0C25 NA35**-223235
1801 NA35**-235561

3310 -2 * FRONT BRAKE MECHANISMS

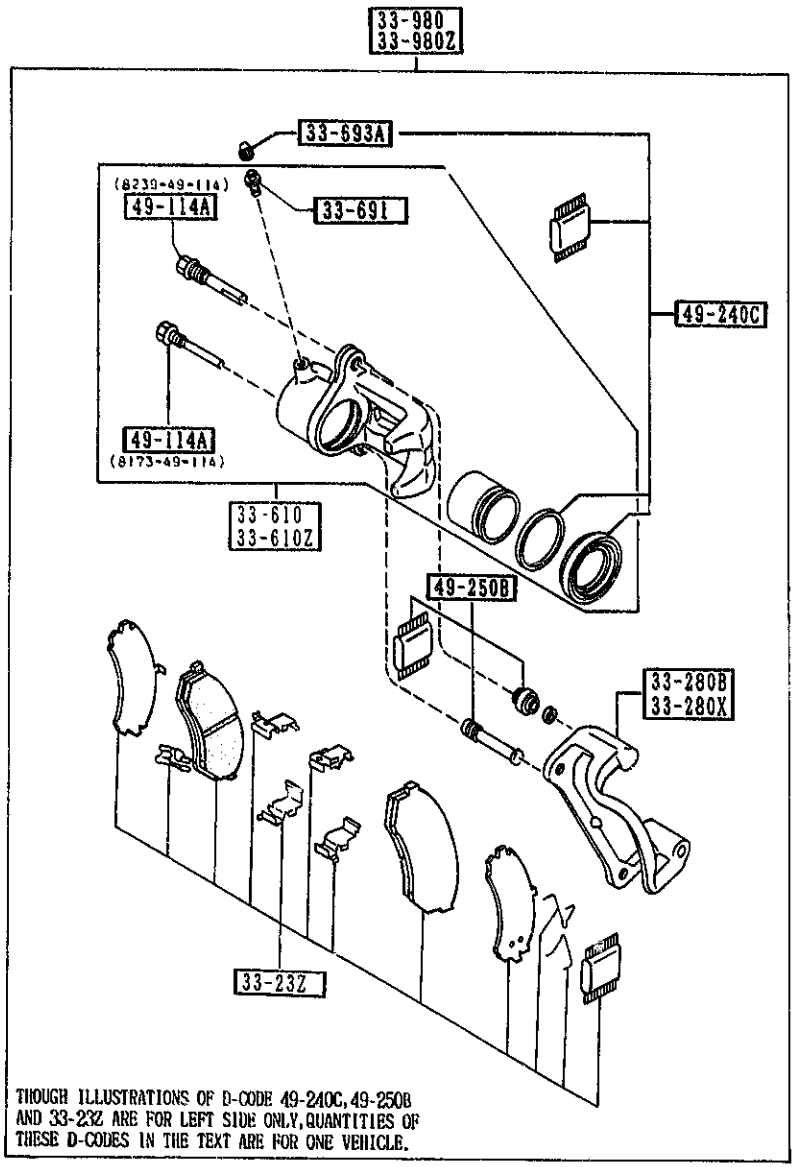

THOUGH ILLUSTRATIONS OF D-CODE 49-240C, 49-250B AND 33-23Z ARE FOR LEFT SIDE ONLY, QUANTITIES OF THESE D-CODES IN THE TEXT ARE FOR ONE VEHICLE.

PART NO.	QTY	MODEL/RESTRICTION	MODEL/RESTRICTION	MODEL/RESTRICTION	FROM-TO
49-250B		BOOT KIT,FRT CALIPER			
NAY1-33-25Z	1				

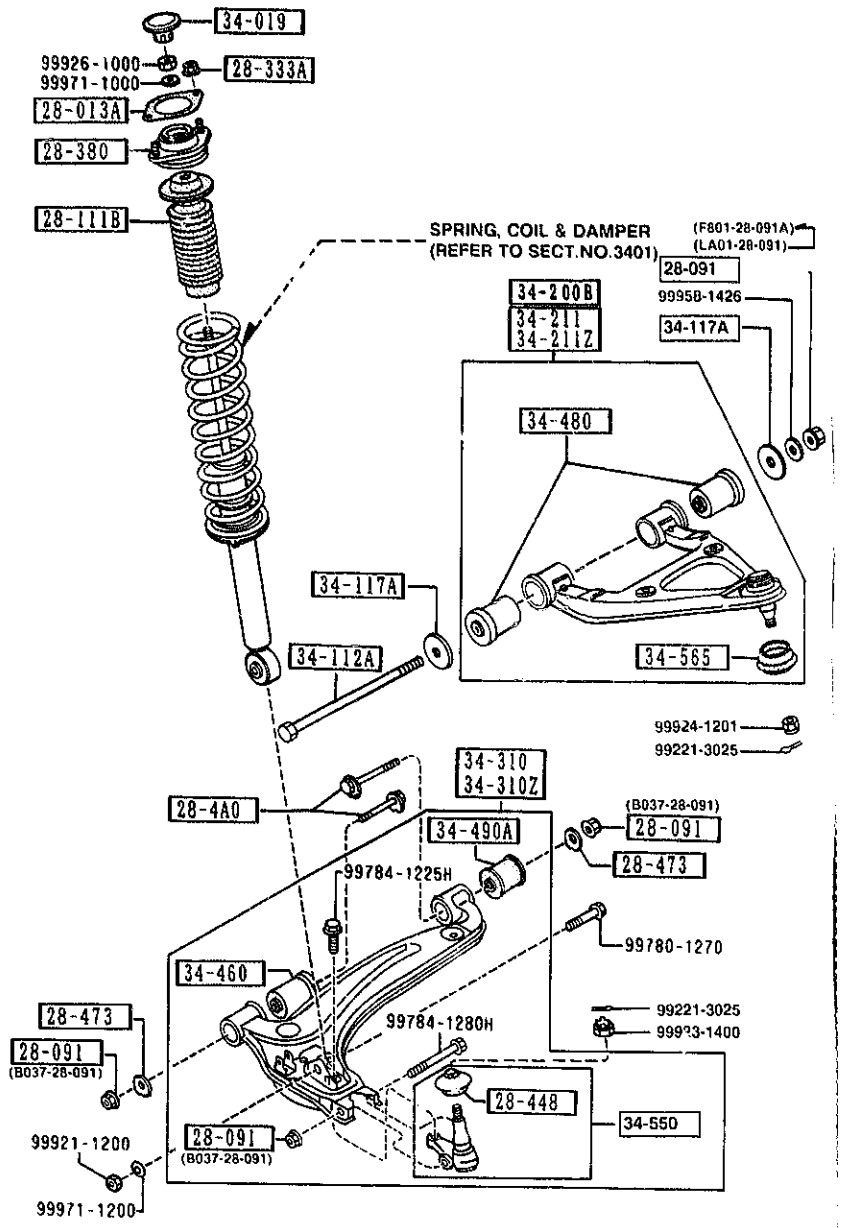

PART NO.	QTY	MODEL/RESTRICTION	MODEL/RESTRICTION	MODEL/RESTRICTION	FROM-TO
28-013A		SHEET,RUBBER			
G030-28-013A	2				
28-091		NUT			
B037-28-091	6				
LA01-28-091	2				-1510
FB01-28-091A	2				1510-
28-111B		STOPPER,BUMP			
NA01-28-111	2				
28-333A		NUT,FLANGE			
H001-28-333	4				
28-380		RUBBER,MOUNTING			
NA01-28-380A (NA01-28-380B)	2				-2310
NA01-28-380B	2				2310-
28-4A0		BOLT,ADJUST			
NA01-28-4A0	4				
28-448		SEAL,DUST-BALL JOINT			
H266-28-448	2				
28-473		PLATE,CAM-SUB FRAME			
NA01-28-473	4				
34-019		CAP,DAMPER			
NA01-34-019	2				
34-112A		BOLT			
NA01-34-112	2				
34-117A		WASHER			
NA01-34-117A	4				
34-200B		ARM,UPPER-FRT			
NA01-34-200A	2	(W/O A.LOCK BRAKE)			

1510 NA35**-234121
2310 NA35**-319561

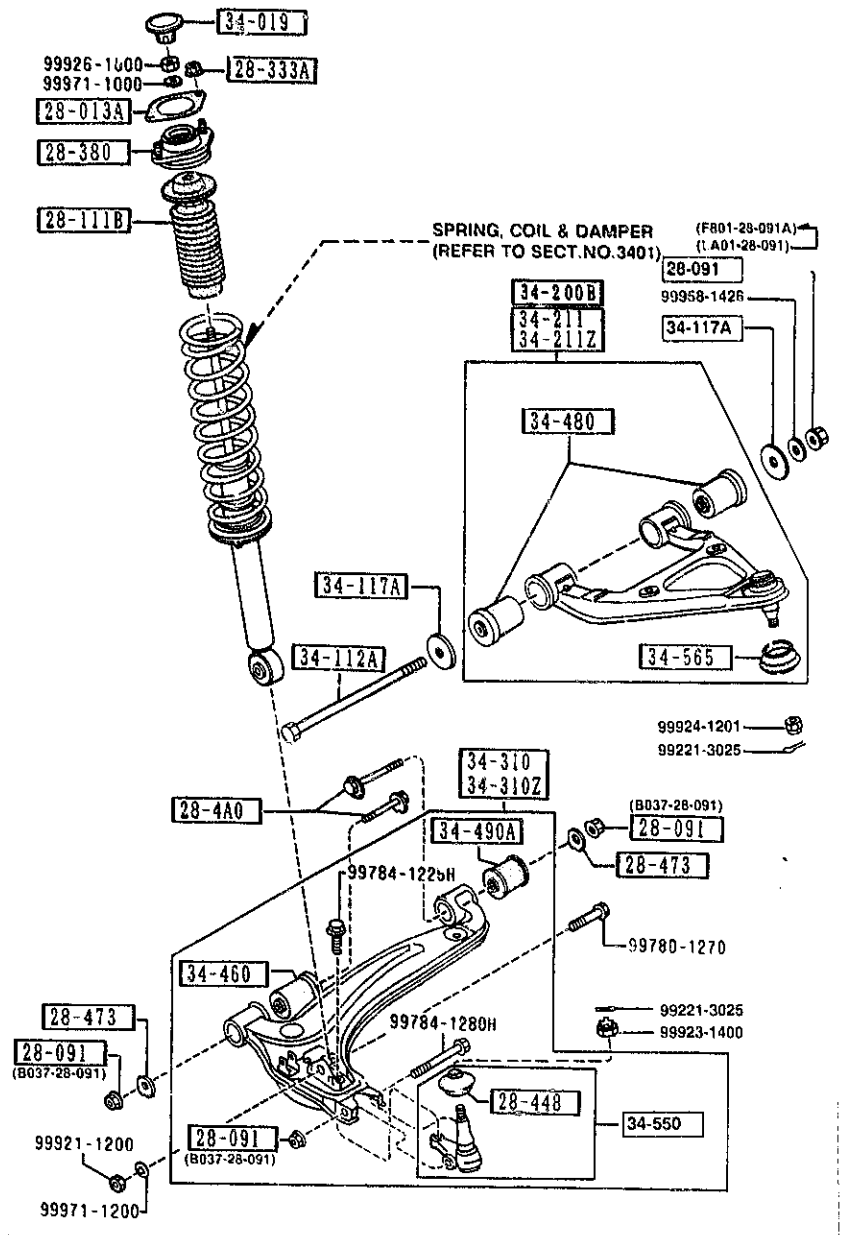

PART NO.	QTY	MODEL/RESTRICTION	MODEL/RESTRICTION	MODEL/RESTRICTION	FROM-TO
34-211		ARM(R),UPPER			
NA23-34-200	1	(A.LOCK BRAKE)			
34-211Z		ARM(L),UPPER			
NA23-34-250	1	(A.LOCK BRAKE)			
34-310		ARM(R),LOWER			
NA01-34-300A	1				
34-310Z		ARM(L),LOWER			
NA01-34-350A	1				
34-460		BUSH,RUBBER-LWR ARM			
NA01-34-460A	2				
34-480		BUSHING,RUBBER-LOWER ARM			
NA01-34-480A	4				
34-490A		BUSHING,RUBBER			
NA01-34-490	2				
34-550		BALL JOINT,LOWER			
NA01-34-550	2				
34-565		SEAL,DUST			
NA01-34-548	2				

3401 -1 * FRONT SPRING & DAMPER

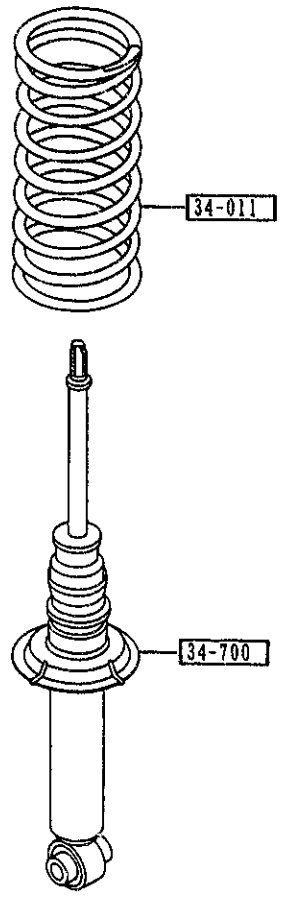

PART NO.	QTY	MODEL/RESTRICTION	MODEL/RESTRICTION	MODEL/RESTRICTION	FROM-TO
34-011		SPRING,COIL-FRONT			
NA01-34-011A	2	(MT)			
NA03-34-011	2	(AT)			
34-700		DAMPER,FRONT			
NA01-34-700	2	(W/O A.LOCK BRAKE)			
NA23-34-700B	2	(A.LOCK BRAKE)			

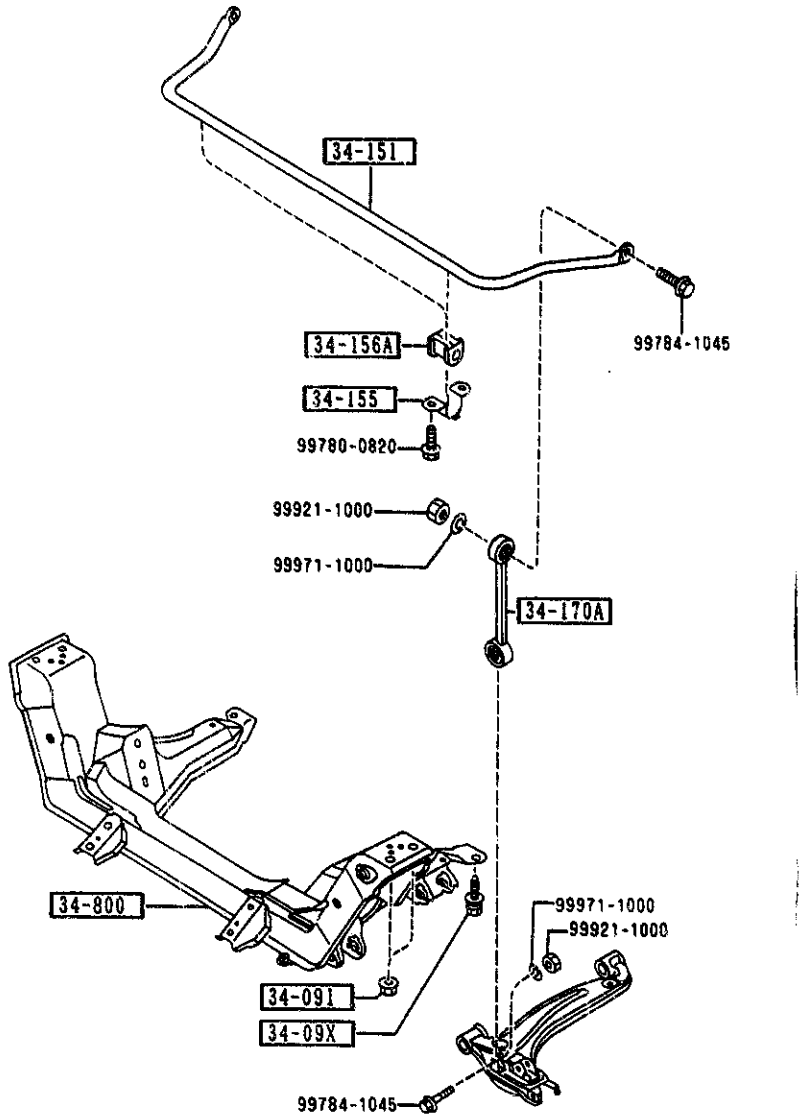

PART NO.	QTY	MODEL/RESTRICTION	MODEL/RESTRICTION	MODEL/RESTRICTION	FROM-TO
34-09X		BOLT			
NA01-34-09XA	4				
34-091		NUT			
FB01-34-091	4				
34-151		STABILIZER,FRONT			
NAC1-34-151A	1				
34-155		PLATE,STABILIZER			
FB01-34-155	2				
34-156A		RUBBER,STAB -FRT			
NA01-34-156A	2				
34-170A		LINK,CONTROL-STAB			
NA01-34-170	2				
34-800		MEMBER,CROSS			
NA01-34-800A	1				

3700 TIRES & JACK

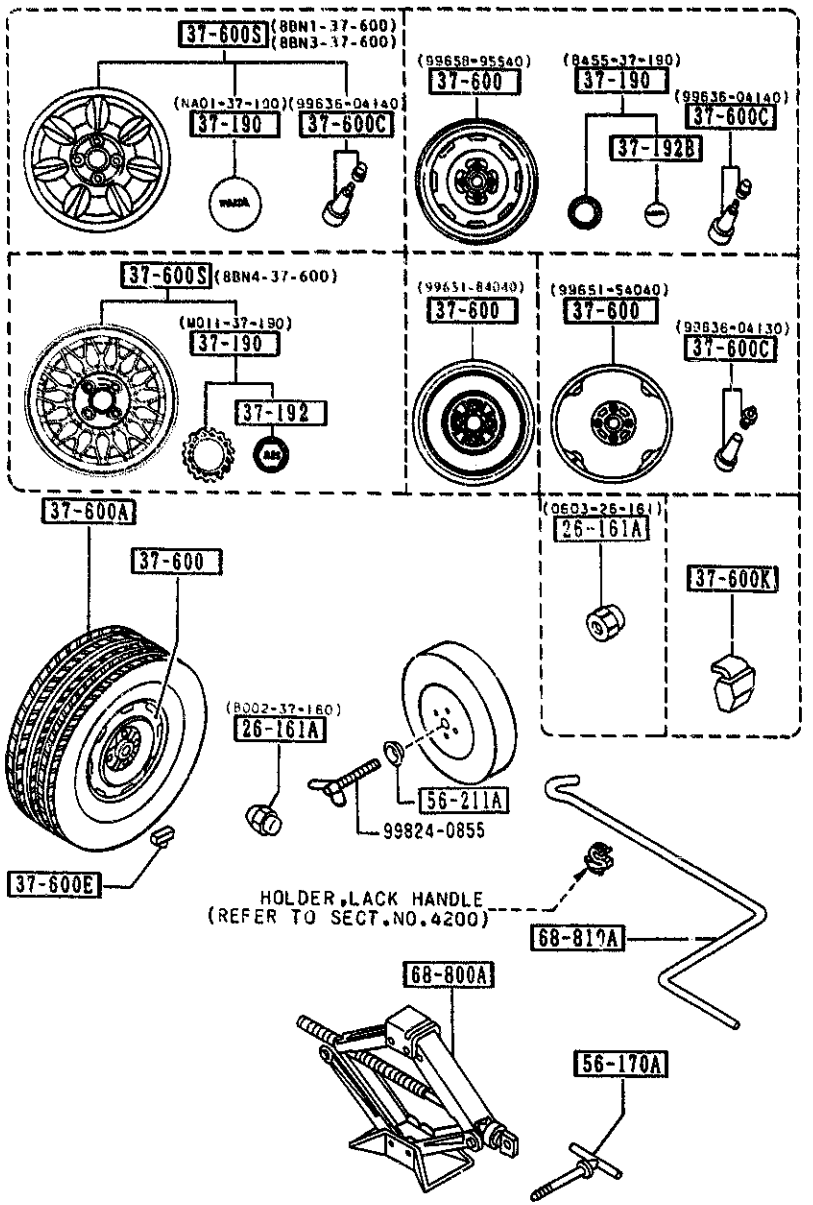

PART NO.	QTY	MODEL/RESTRICTION	MODEL/RESTRICTION	MODEL/RESTRICTION	FROM-TO
26-161A		NUT,HUB			
0603-26-161	16	NON BRIGHT PKG-OPT,			
B002-37-160	16	PLATED BASE,			
37-190		CAP,CENTER			
B455-37-190	4	BASE,			
NA01-37-190	4	PKG-OPT,			
M011-37-190	4	SP-AD, (BBS ALUMI.WHEEL)			1801-
37-192		EMBLEM,CAP-WHEEL			
M011-37-192	4	SP-AD, (BBS ALUMI.WHEEL)			1801-
37-192B		EMBLEM,CENTER			
B001-37-192	4	BASE			
37-600		WHEEL,DISC-STEEL			
99658-95540	4	5.5JJX14 P=100/0=45 BASE,			
99651-54040	1	4TX14 P=100/0=45			-2501
99651-84040	1	4TX14 P=100/0=45			2501-
37-600A		TIRE			
90620-47614	1	T155/70D14			
90623-06684	4	P185/60R14 DUNLOP SP-AD, (BBS ALUMI.WHEEL)			
90624-26684	4	P185/60R14 BS			
37-600C		VALVE,AIR			
99636-04130	1	TR413			
99636-04140	4	TR414			
37-600E		WEIGHT,DISC WHEEL-STEEL			
99655-30005	4	5G			

1801 NA35**-235561
2501 NA35**-326361

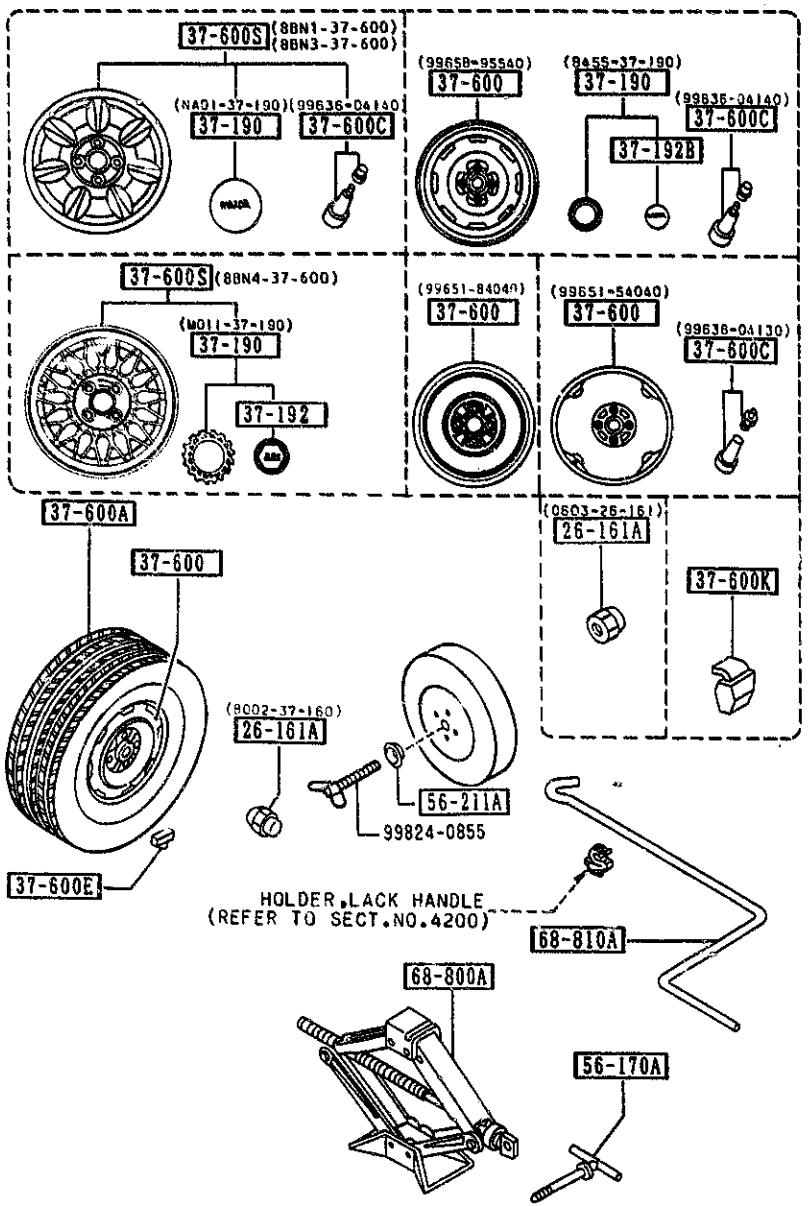

PART NO.	QTY	MODEL/RESTRICTION	MODEL/RESTRICTION	MODEL/RESTRICTION	FROM-TO
CONT'D					
99655-30010	4	10G			
99655-30015	4	15G			
99655-30020	4	20G			
99655-30025	4	25G			
99655-30030	4	30G			
99655-30035	4	35G			
99655-30040	4	40G			
99655-30045	4	45G			
99655-30050	4	50G			
99655-30055	4	55G			
99655-30060	4	60G			
37-600K		WEIGHT,DISC WHEEL-ALUMI			
99655-90005	4	5G FOR 1-PIECE WHL			
99655-90010	4	10G FOR 1-PIECE WHL			
99655-90015	4	15G FOR 1-PIECE WHL			
99655-90020	4	20G FOR 1-PIECE WHL			
99655-90025	4	25G FOR 1-PIECE WHL			
99655-90030	4	30G FOR 1-PIECE WHL			
99655-90035	4	35G FOR 1-PIECE WHL			
99655-90040	4	40G FOR 1-PIECE WHL			
99655-90045	4	45G FOR 1-PIECE WHL			
99655-90050	4	50G FOR 1-PIECE WHL			
99655-90055	4	55G FOR 1-PIECE WHL			

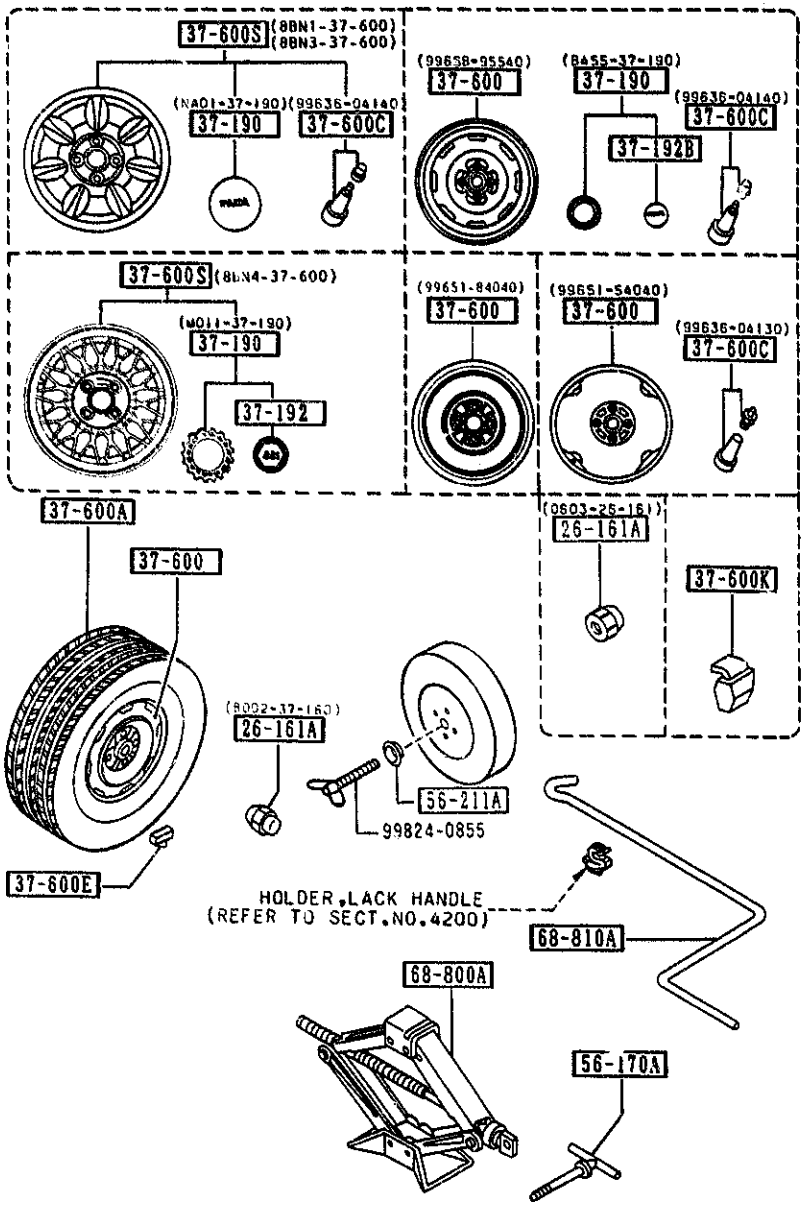

PART NO.	QTY	MODEL/RESTRICTION	MODEL/RESTRICTION	MODEL/RESTRICTION	FROM-TO
CONT'D					
99655-90060	4	60G FOR 1-PIECE WHL			
37-600S		WHEEL SET,DISC-ALUMI			
8BN1-37-600	4	5.5JJX14 NKK MAKE PKG-OPT,			
8BN3-37-600	4	5.5JJX14 ENKEI MAKE PKG-OPT,			
8BN4-37-600	4	6JJX14 BBS SP-AD, (BBS ALUMI.WHEEL)			1801-
56-170A		BOLT,JACK SET			
B001-56-170C	1				
56-211A		PLATE,CLAMP-JACK			
1219-56-211	1				
68-800A		JACK			
B455-37-790A	1				
68-810A		HANDLE,JACK			
GJ21-37-810	1				

1801 NA35**-235561

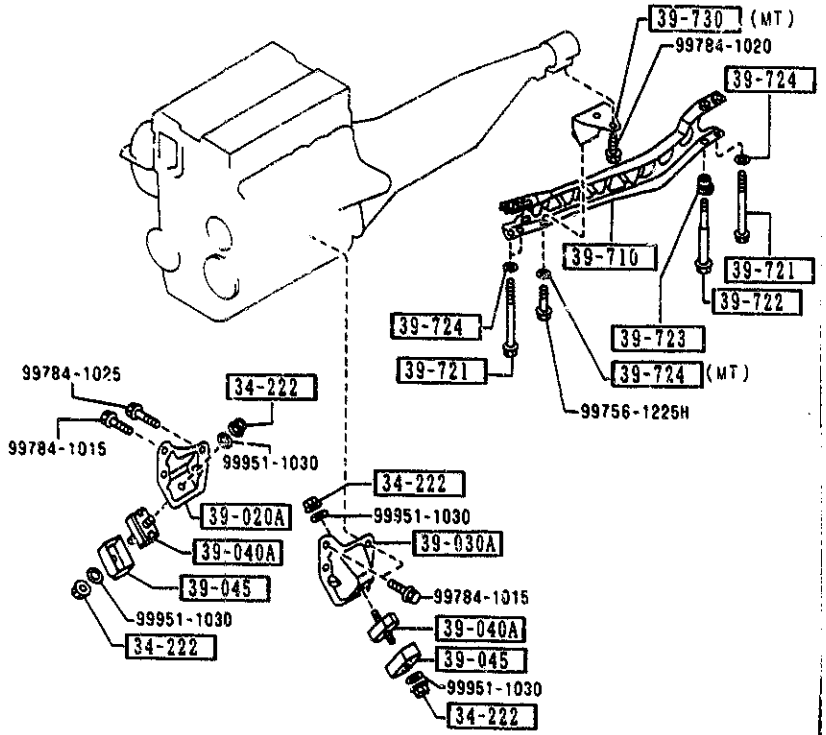

PART NO.	QTY	MODEL/RESTRICTION	MODEL/RESTRICTION	MODEL/RESTRICTION	FROM-TO
34-222		NUT			
8871-34-222	4				
39-020A		BRACKET(R),ENGINE			
NA01-39-020	1				
39-030A		BRACKET(L),ENGINE			
NA01-39-030	1				
39-040A		RUBBER,ENGINE MT.			
NA01-39-040	2				
39-045		CASING,STOPPER			
NA01-39-041	2	(MT)			
S231-39-041	2	(AT)			
39-710		FRAME,POWER PLANT			
NA01-39-710	1	(MT)			
NA03-39-710	1	(AT)			
39-721		BOLT,PLANT FRAME			
NA01-39-721	3				
39-722		BOLT,PLANT FRAME			
NA01-39-722	1				
39-723		SPACER,PLANT FRAME			
NA01-39-723	1				
39-724		WASHER,PLAIN-FRAME			
NA01-39-724	3	(AT)			
NA01-39-724	4	(MT)			
39-730		BRACKET,PLANT FRAME			
NA01-39-730A	1	(MT)			

4000 -1 EXHAUST SYSTEM

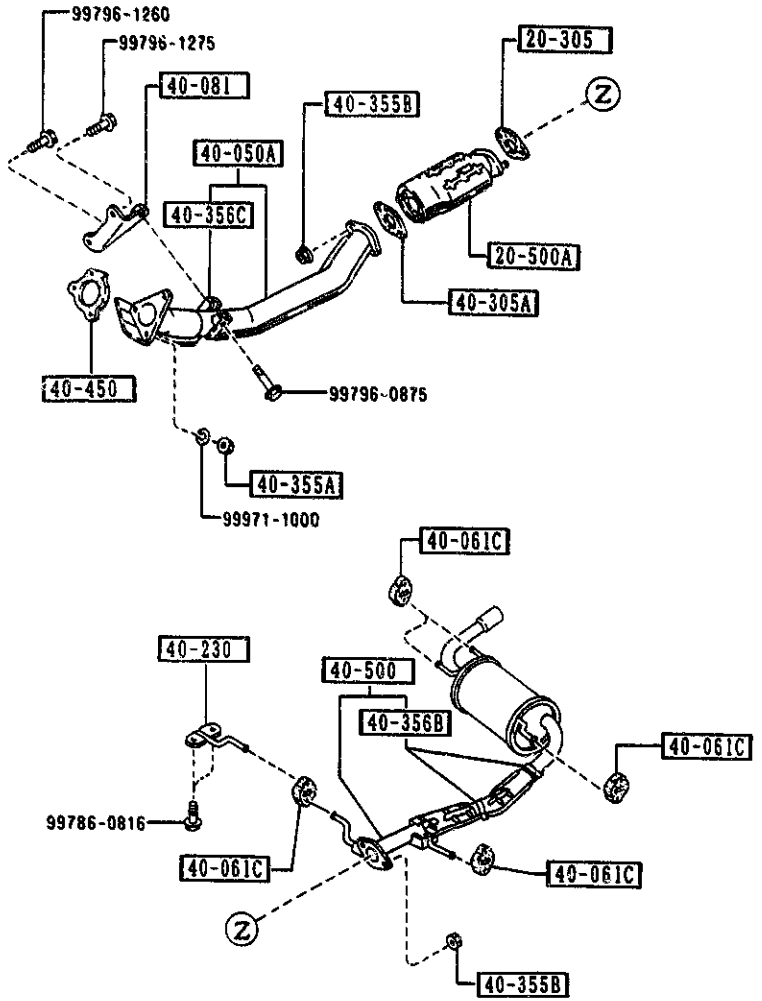

PART NO.	QTY	MODEL/RESTRICTION	MODEL/RESTRICTION	MODEL/RESTRICTION	FROM 10
20-305 B690-40-305	1	GASKET,EXH.PIPE-CONVERTER NON ASBESTOS			
20-500A B61P-20-600	1	CATALYST,THREE WAY			
40-050A B690-40-500A	1	PIPE,EXHAUST-FRONT			
40-061C RF03-40-061	5	HANGER,SILENCER			
40-081 B690-40-080A	1	BRACKET,HANGER			
40-230 B690-40-690	1	BRACKET,HANGER			
40-305A B322-40-305	1	GASKET NON ASBESTOS			
40-355A 2158-40-355	3	NUT			
40-355B JE10-40-355	4	NUT			
40-356B B6A5-40-356	2	BAND			
40-356C B690-40-356	1	BAND			
40-450 B690-40-450	1	GASKET,CONVERTER NON ASBESTOS			
40-500 B6B4-40-100B AN(B6B4-40-100C)	1	SILENCER,MAIN			-1601

1601 NA35**-235561

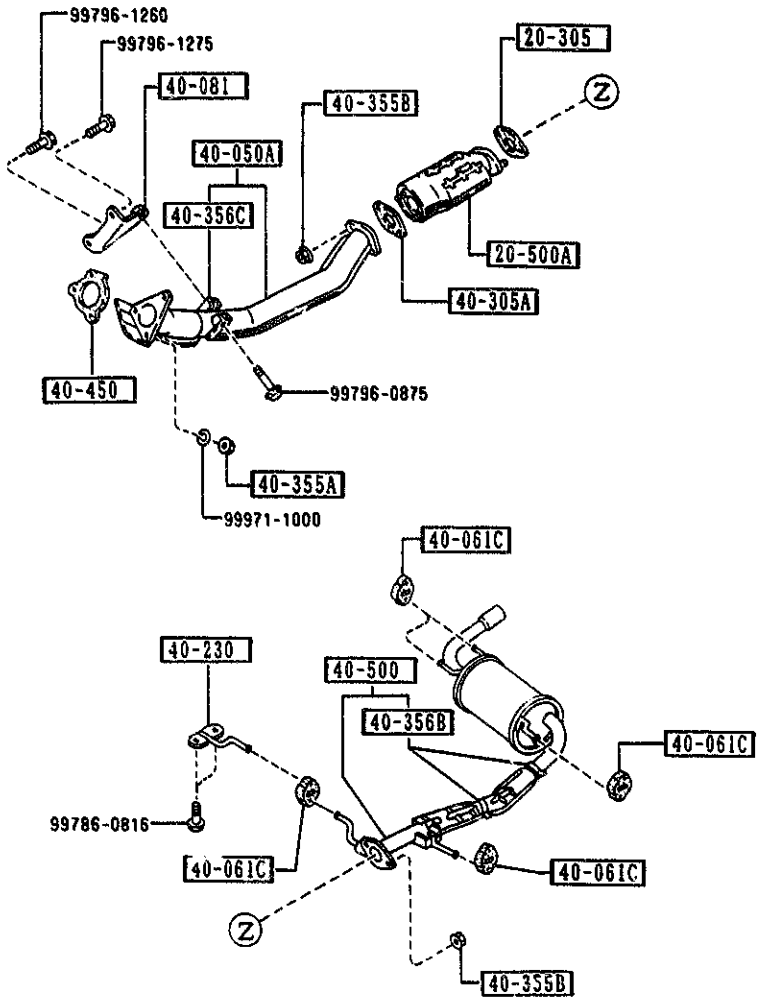

PART NO.	QTY	MODEL/RESTRICTION	MODEL/RESTRICTION	MODEL/RESTRICTION	FROM TO
CONT'D					
B690-40-100F AN(B690-40-100G)	1				-1601
B6B4-40-100C A (B6B4-40-100D)	1				1601-1826
B690-40-100G A (B690-40-100H)	1				1601-1826
B690-40-100H AN(B690-40-100J)	1				1826-2407
B6B4-40-100D AN(B6B4-40-100E)	1				1826-2408
B690-40-100J	1	(MT)			2407-
B6B4-40-100E	1	(AT)			2408-

1601 NA35✱✱-235561
1826 NA35✱✱-309171
2407 NA35✱✱-322783
2408 NA35✱✱-323024

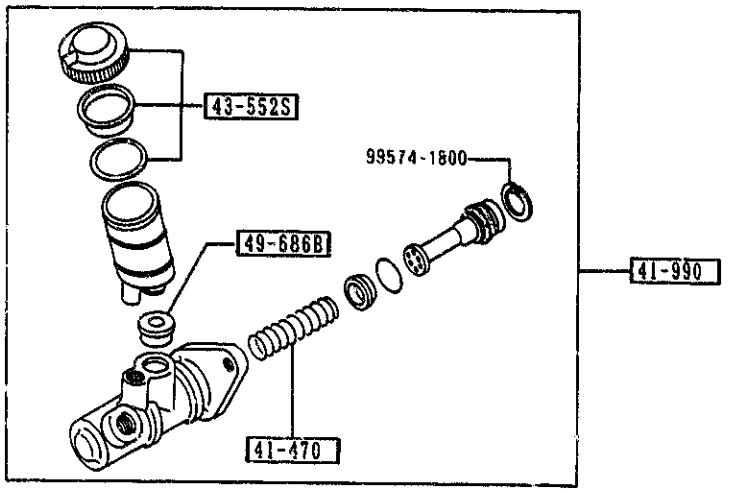

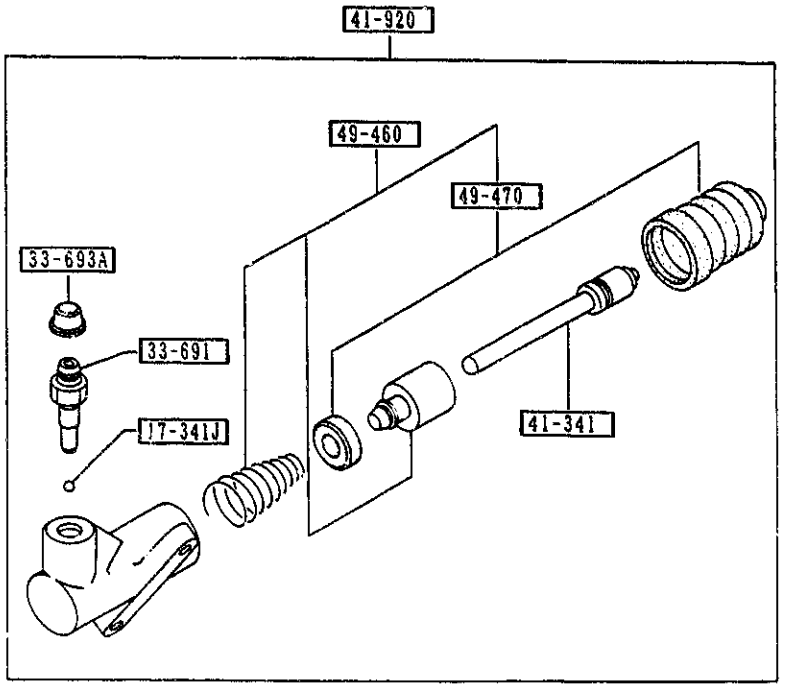

AUNA02

4140 -1 * CLUTCH RELEASE & MASTER CYLINDERS (MANUAL TRANSMISSION)

PART NO.	QTY	MODEL/RESTRICTION	MODEL/RESTRICTION	MODEL/RESTRICTION	FROM TO
17-341J 99611-1500	1	BALL,STEEL			
33-691 0259-33-691	1	SCREW,BLEEDER			
33-693A 0259-33-693	1	CAP,BLEEDER SCREW			
41-341 H266-41-341	1	ROD,PUSH			
41-470 B312-41-470	1	SPRING			
41-920 NA01-41-920	1	CYL.,CLUTCH RELEASE			
41-990 NA01-41-400A	1	CYL.,CLUTCH MASTER			
43-552S B093-49-580	1	CAP SET,RESERVE TANK			
49-460 H005-49-460	1	PARTS KIT,INNER			
49-470 H005-49-470	1	SEAL KIT			
49-686B 0305-49-686B	1	BUSH,ELBOW JOINT			

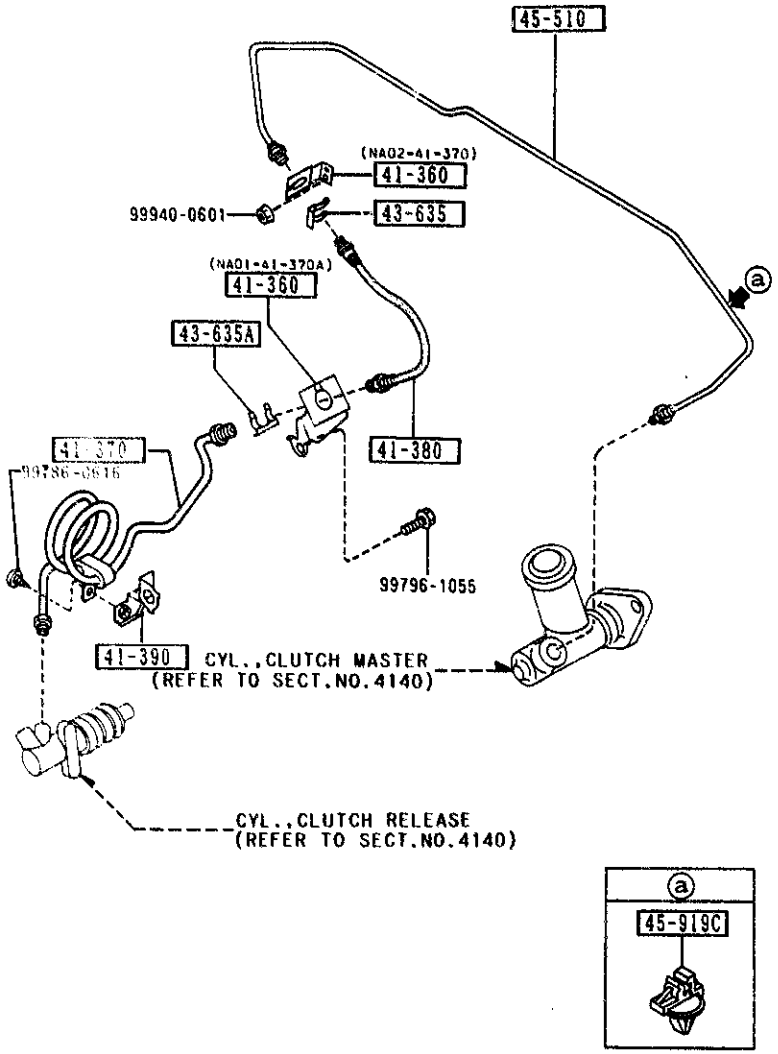

4145 -1 ✱ CLUTCH PIPINGS (MANUAL TRANSMISSION)

PART NO.	QTY	MODEL/RESTRICTION	MODEL/RESTRICTION	MODEL/RESTRICTION	FROM TO
41-360		HOLDER,CLUTCH			
NA01-41-370A	1	SUMINO KOGYO			
NA02-41-370	1	MIDORI			
41-370		PIPE,CLUTCH			
NA01-41-360A	1				
41-380		HOSE,FLEXIBLE			
GK67-41-380A	1				
41-390		HOLDER,PIPE			
NA01-41-390	1				
43-635		CLIP,FLEXIBLE HOSE			
W023-43-635	1				0723-
43-635A		CLIP,FLEXIBLE HOSE			
0136-43-635	2				-0723
0136-43-635	1				0723-
45-510		PIPE,CLUTCH			
NA20-45-510D	1				
45-919C		CLIP,PIPE			
G030-45-919	1				

0723 NA35✱✱-203719

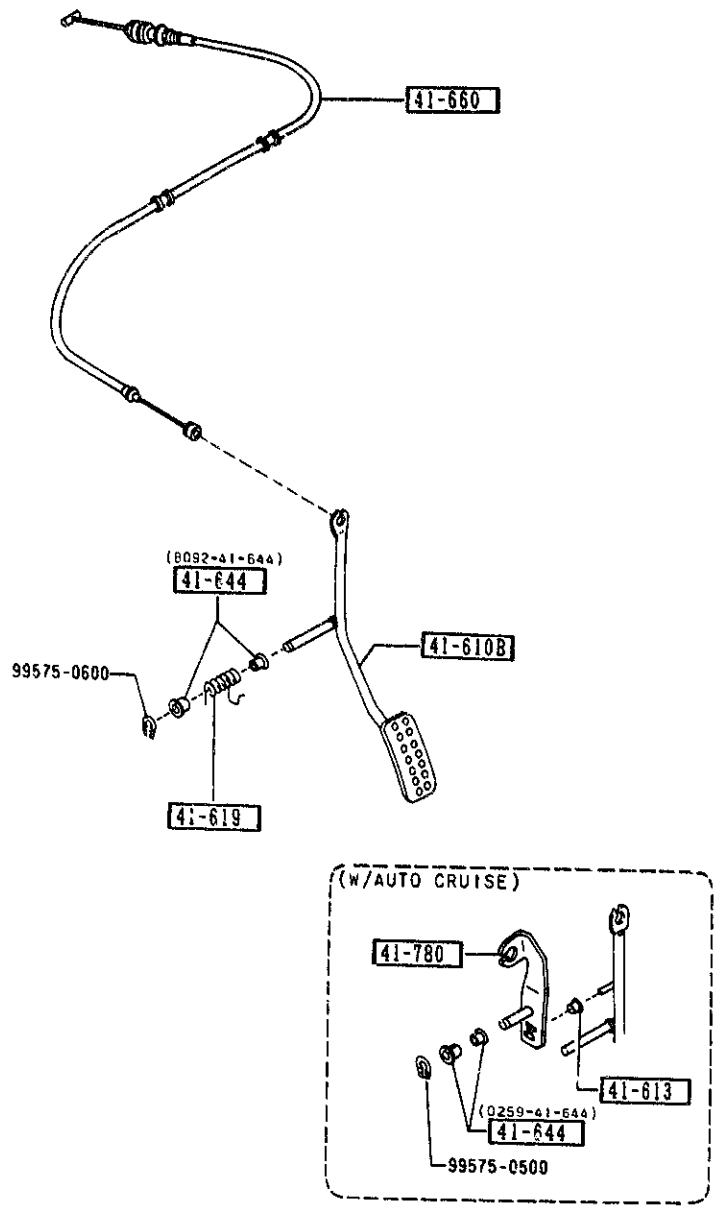

PART NO.	QTY	MODEL/RESTRICTION	MODEL/RESTRICTION	MODEL/RESTRICTION	FROM-TO
41-610B		PEDAL & ARM			
NA01-41-610A	1	BASE, (W/O AUTO CRUISE CONT.)			
NA02-41-610A	1	PKG-OPT, (W/AUTO CRUISE CONT)			
41-613		ROLLER			
B104-41-114	1	PKG-OPT, (W/AUTO CRUISE CONT)			
41-619		SPRING,RETURN			
NA01-41-619	1				
41-644		BUSH			
B092-41-644	2	OIRES KOGYO			
0259-41-644	2	ONDO KOSAKUSHO PKG-OPT, (W/AUTO CRUISE CONT)			
41-660		CABLE,ACCEL.			
NA01-41-660A	1				
41-780		LEVER,ACCELERATOR			
NA01-41-130A	1	PKG-OPT, (W/AUTO CRUISE CONT)			

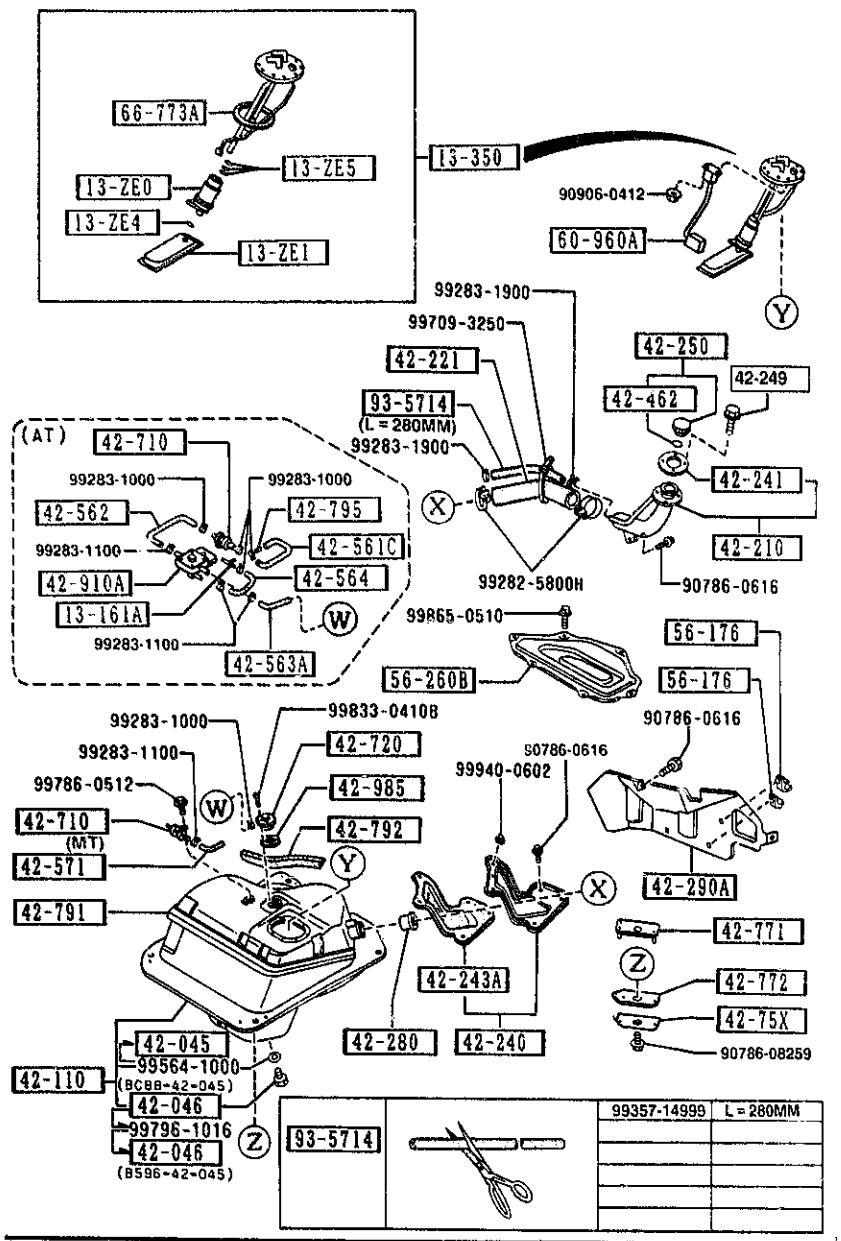

PART NO.	QTY	MODEL/RESTRICTION	MODEL/RESTRICTION	MODEL/RESTRICTION	FROM-TO
13-ZE0		PUMP,FUEL			
B61P-13-ZE0	1				
13-ZE1		FILTER,FUEL PUMP			
B61P-13-ZE1	1				
13-ZE4		WASHER,LOCK-PUMP FIL TER			
FEH2-13-ZE4	1	DENSO			
13-ZE5		RING,'O'-FUEL PUMP			
B61P-13-ZE5	1				
13-161A		JOINT'T'			
E580-13-161	1	(AT)			
13-350		PUMP,FUEL			
B61P-13-350B	1				
42-045		GASKET,DRAIN PLUG			
0866-42-046	1				1B01-
42-046		PLUG,DRAIN			
BC88-42-045	1				-1B01
B596-42-045	1				2201-
42-110		TANK,FUEL			
NA01-42-110A	1	(MT)			
NA03-42-110	1	(AT)			
42-210		PIPE,FILLER			
NA01-42-210A	1				
42-221		HOSE,FILLER			
NA01-42-241B	1				
42-240		COVER,DUST			
NA01-42-230	1				
42-241		GASKET,FILLER PIPE			
0866-42-366B	1				

1B01 NA35**-306993
2201 NA35**-316887

4200 FUEL TANK

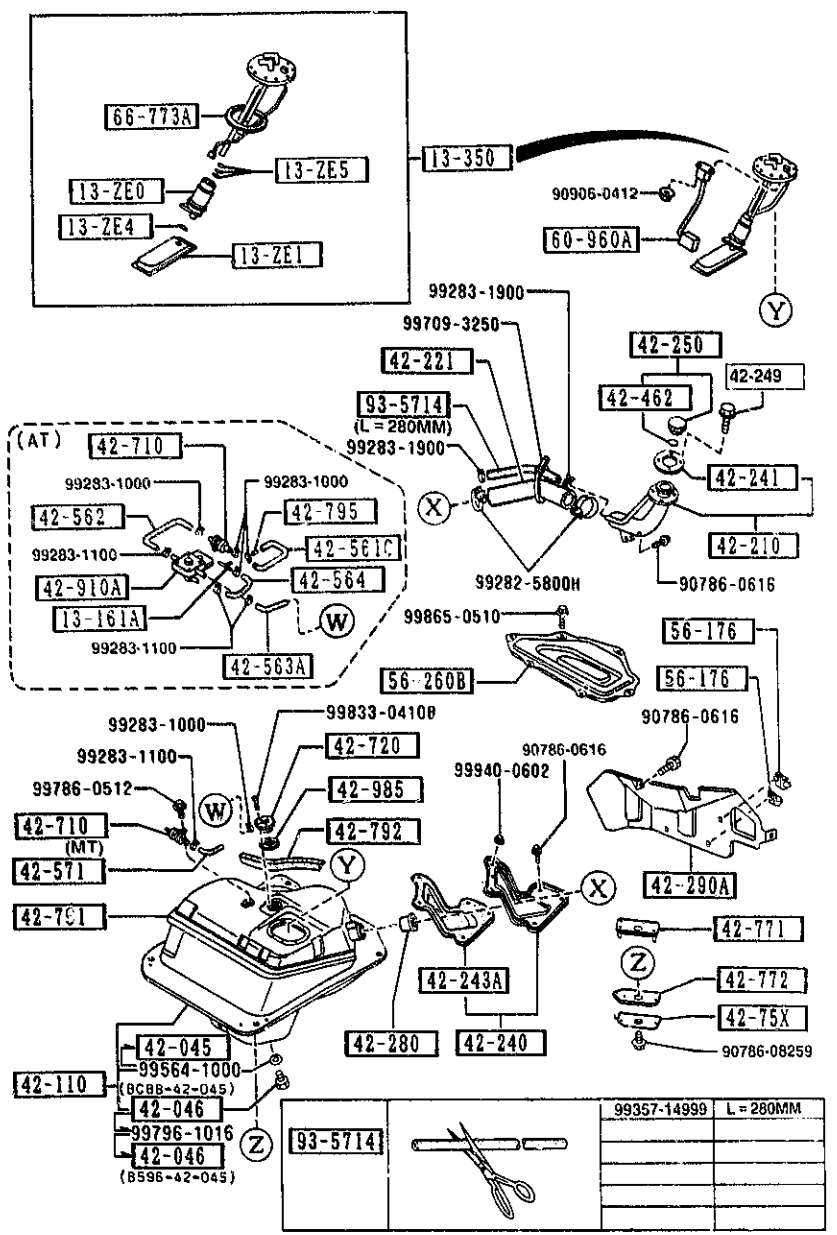

PART NO.	QTY	MODEL/RESTRICTION	MODEL/RESTRICTION	MODEL/RESTRICTION	FROM TO
42-243A NA01-42-233	1	GASKET'A',DUST COVER			
42-249 NA01-42-249B	4	BOLT,FILLER PIPE			
42-250 NA02-42-250	1	CAP,FILLER			
42-280 H260-42-270	1	VALVE,NON RETURN			
42-290A NA01-42-291A	1	PROTECTOR'A',FILLER PIPE			
42-462 *BF67-42-252	1	GASKET,CAP			
42-561C NA03-42-561	1	HOSE NO.1,BREATHER (AT)			
42-562 NA03-42-562	1	HOSE NO.2,BREATHER (AT)			
42-563A NA03-42-563	1	HOSE NO.3,BREATHER (AT)			
42-564 NA03-42-564	1	HOSE NO.4,BREATHER (AT)			
42-571 NA01-42-561	1	HOSE,VENT (MT)			
42-710 H260-42-910B	1	VALVE,CHECK			
42-720 FB01-42-980	1	VALVE,FUEL VAPOR.			
42-75X NA01-42-77X	4	REINF.,FUEL TANK			

AUNA02

CAT. AUNA02-07

1993-12

4200 FUEL TANK

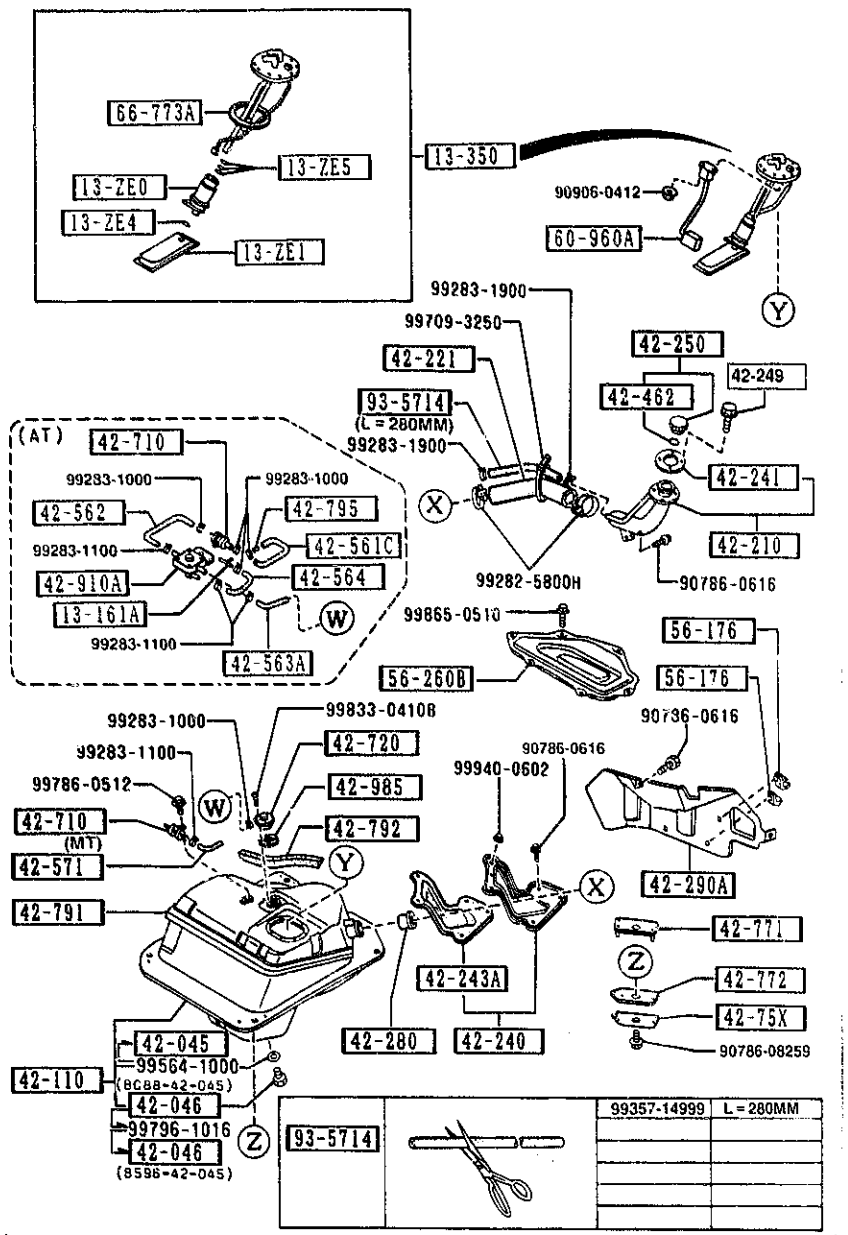

PART NO.	QTY	MODEL/RESTRICTION	MODEL/RESTRICTION	MODEL/RESTRICTION	FROM-TO
42-771		RUBBER(UP),MOUNT-TANK			
NA01-42-771	4				
42-772		RUBBER(LWR),MOUNT-TANK			
NA01-42-772	4				
42-791		PAD,FUEL TANK			
NA01-42-761	1				
42-792		PAD,FUEL TANK			
NA01-42-762	1				
42-795		INSERT			
GN51-42-795	1	(AT)			
42-910A		VALVE'A',CHECK-BREATHER			
NA03-42-910	1	(AT)			
42-985		GASKET,VAPOR VALVE			
FB01-42-985	1				
56-176		HOLDER,JACK HANDLE			
G030-56-176	3				
56-260B		COVER,GAUGE-FUEL TANK			
NA01-56-260	1				
60-960A		GAUGE,FUEL TANK			
NA01-60-960	1				
66-773A		GASKET			
NA01-60-962	1				
93-5714		HOSE			
99357-14999	1				

99357-14999	L=280MM

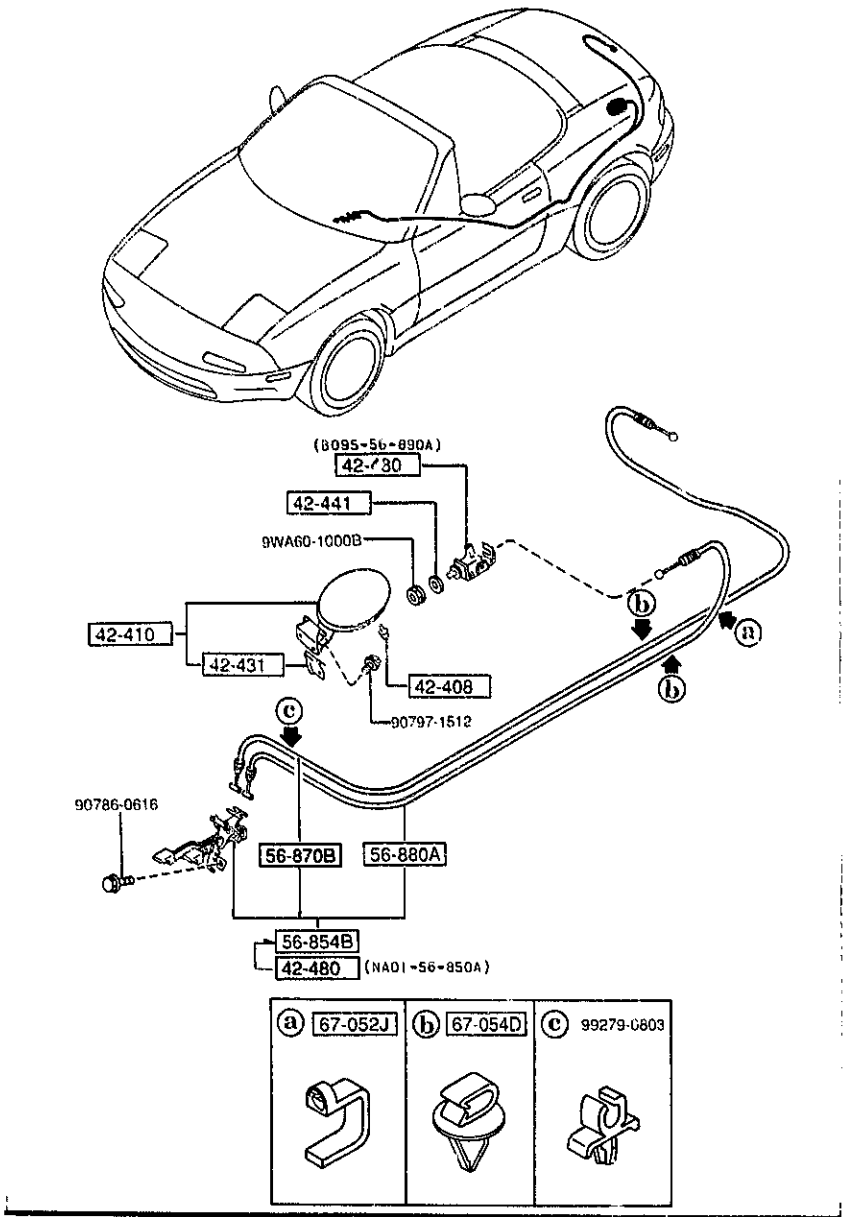

AUNA02

4210 -1 * FUEL LID OPENER

PART NO.	QTY	MODEL/RESTRICTION	MODEL/RESTRICTION	MODEL/RESTRICTION	FROM-TO
42-408		STOPPER,FILLER LID			
0187-70-491	2				
42-410		LID,FUEL FILLER			
NA01-42-410A	1				
42-431		SPRING LIFT,LID			
H043-42-431D	1				
42-441		WASHER,LID OPENER			
NA01-56-896	1				
42-480		OPENER,FILLER LID			
B095-56-890A	1				
NA01-56-850A	1				-1801
56-854B		OPENER,T/LID & F/LID			
N007-56-850A	1				1801-
56-870B		CABLE,T/LID OPENER			
N007-56-880A	1				1801-
56-880A		CABLE,F/LID OPENER			
NA01-56-890A	1				
67-052J		CLIP			
B001-67-051	1				
67-054D		CLIP			
H260-67-054	2				

1801 NA35**-235561

CAT. AUNA02-07 1993-12

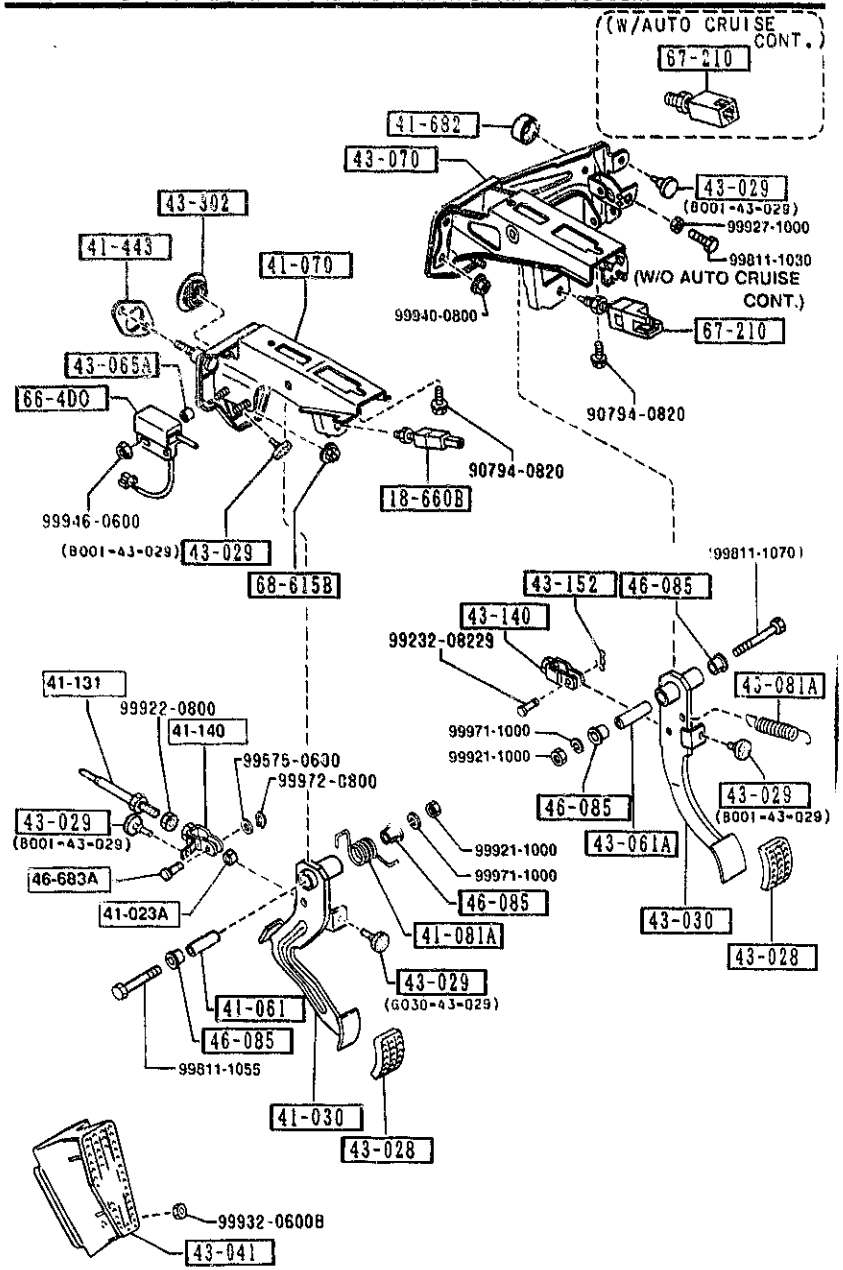

PART NO.	QTY	MODEL/RESTRICTION	MODEL/RESTRICTION	MODEL/RESTRICTION	FROM-TO
18-660B LA01-66-490A	1	SWITCH,CLUTCH			
41-023A 0727-41-023	1	BUSH			
41-030 NA01-41-030B	1	PEDAL,CLUTCH			-1101
A (NA01-41-030C)					
NA01-41-030C	1				1101-
41-061 0727-41-061	1	SPACER			
41-070 NA01-41-070A	1	BRACKET,MASTER CYL.			
41-081A BR70-41-081	1	SPRING,RETURN			
41-131 0824-41-131	1	ROD,PUSH			
41-140 NA01-41-140B	1	FORK,CLUTCH			
41-443 NA01-41-443	1	GASKET			
41-682 1456-41-682	1	RUBBER,STOP PKG-OPT, (W/AUTO CRUISE CONT)			
43-028 B092-43-028	2	PAD,PEDAL			
43-029 B001-43-029	4	RUBBER,STOPPER KUROISHI TEKKO			
G030-43-029	1	OIRES KOGYO			

1101 NA35**-223636

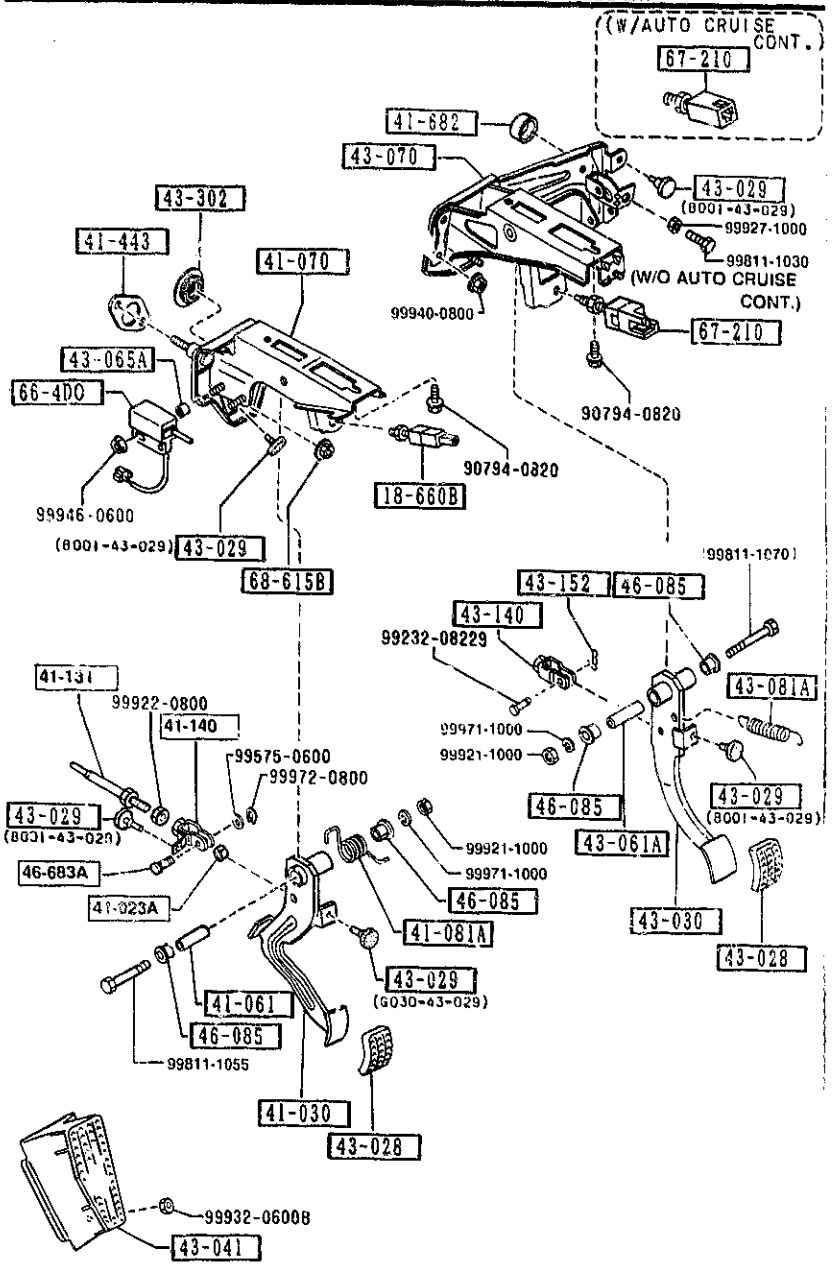

AUNA02

PART NO.	QTY	MODEL/RESTRICTION	MODEL/RESTRICTION	MODEL/RESTRICTION	FROM-TO
43-030		PEDAL,BRAKE			
NA01-43-030	1				
43-041		REST,FOOT			
NA01-43-041	1				
43-061A		PIPE,PEDAL			
0866-43-062	1				
43-065A		SPACER			
BR70-43-065	2				
43-070		BRACKET,MASTER CYL.			
NA01-43-070A	1	BASE, (W/O AUTO CRUISE CONT.)			
NA02-43-070A	1	PKG-OPT, (W/AUTO CRUISE CONT)			
43-081A		SPRING,RETURN-BRAKE			
B092-43-081	1				
43-140		FORK,BRAKE			
1524-43-140	1				-2620
*1524-43-141	1				2620-
43-152		PIN,SNAP			
D001-43-152	1				
43-302		GROMMET,BRAKE PEDAL			
B180-43-302	1				
46-085		BUSH			
1015-46-085	4				
46-683A		PIN			
0223-46-683	1				
66-4D0		SWITCH,CLUTCH CUT			
FB01-66-4D0	1				

2620 NA35**-330122

CAT. AUNA02-07

1993-12

4300 CLUTCH & BRAKE PEDALS (MANUAL TRANSMISSION)

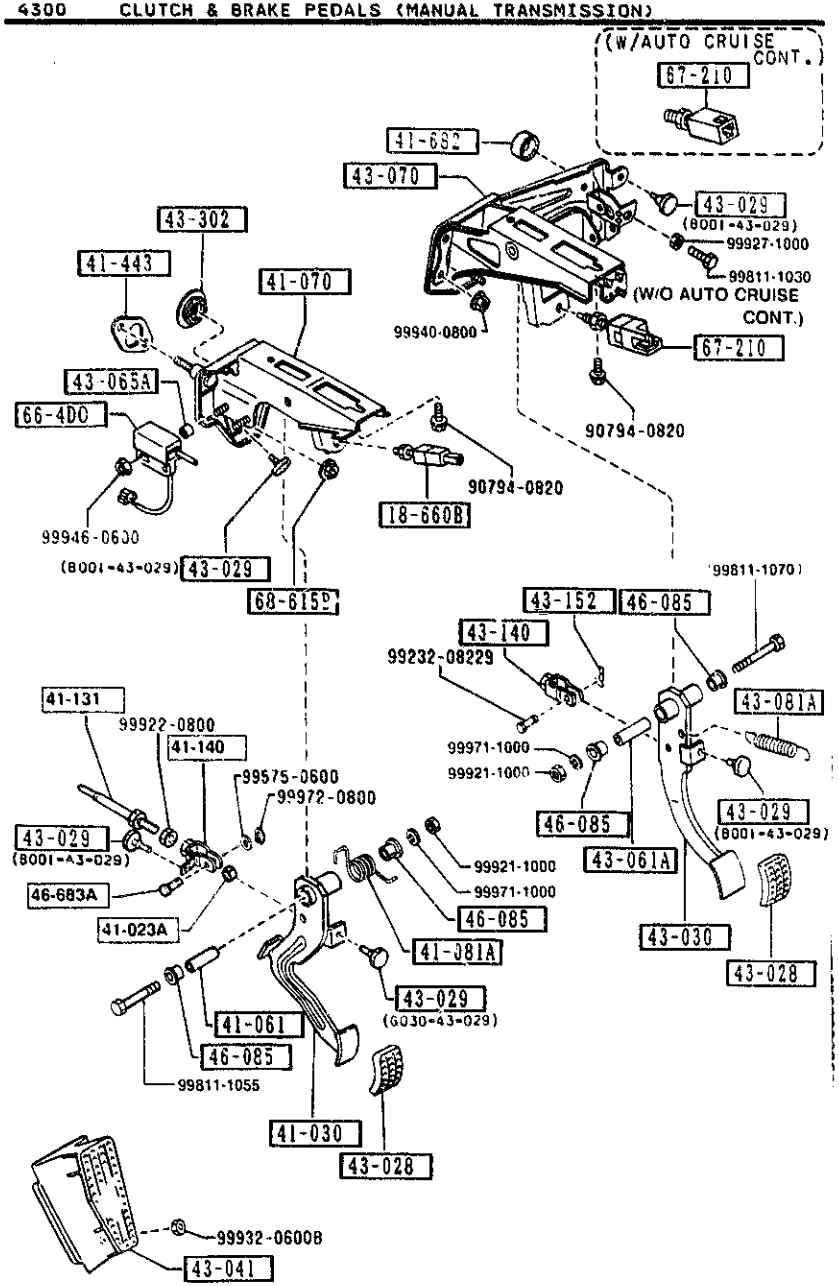

PART NO.	QTY	MODEL/RESTRICTION	MODEL/RESTRICTION	MODEL/RESTRICTION	FROM-TO
67-210		SWITCH,STOP			
BR70-66-490A	1	PKG-OPT, (W/AUTO CRUISE CONT)			
B001-66-490A	1	BASE, (W/O AUTO CRUISE CONT.)			
68-615B		NUT,FLANGE-CAP			
B100-68-615	1				

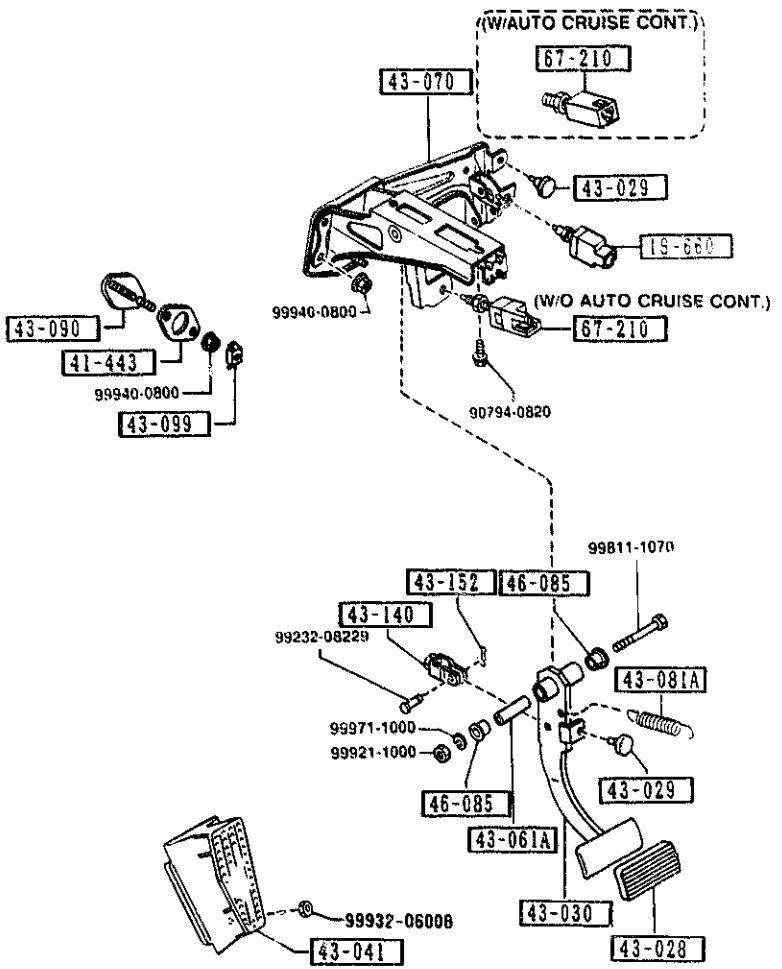

PART NO.	QTY	MODEL/RESTRICTION	MODEL/RESTRICTION	MODEL/RESTRICTION	FROM TO
18-660		SWITCH,KICK DOWN			
H118-66-470	1				
41-443		GASKET			
NA01-41-443	1				
43-028		PAD,PEDAL			
0268-43-028	1				
43-029		RUBBER,STOPPER			
B001-43-029	2	KUROISHI TEKKO			
43-030		PEDAL,BRAKE			
NA03 43-030	1				
43-041		REST,FOOT			
NA01-43-041	1				
43-061A		PIPE,PEDAL			
0866-43-062	1				
43-070		BRACKET,MASTER CYL.			
NA01-43-070A	1	BASE, (W/O AUTO CRUISE CONT.)			
NA02-43-070A	1	PKG-OPT, (W/AUTO CRUISE CONT)			
43-081A		SPRING,RETURN-BRAKE			
B092-41-081	1				
43-090		PLATE			
NA03-43-090	1				
43-099		HOLDER,PLATE			
HF23-43-099	1				
43-140		FORK,BRAKE			
1524-43-140	1				-2620
*1524-43-141	1				2620-

2620 NA35**-330122

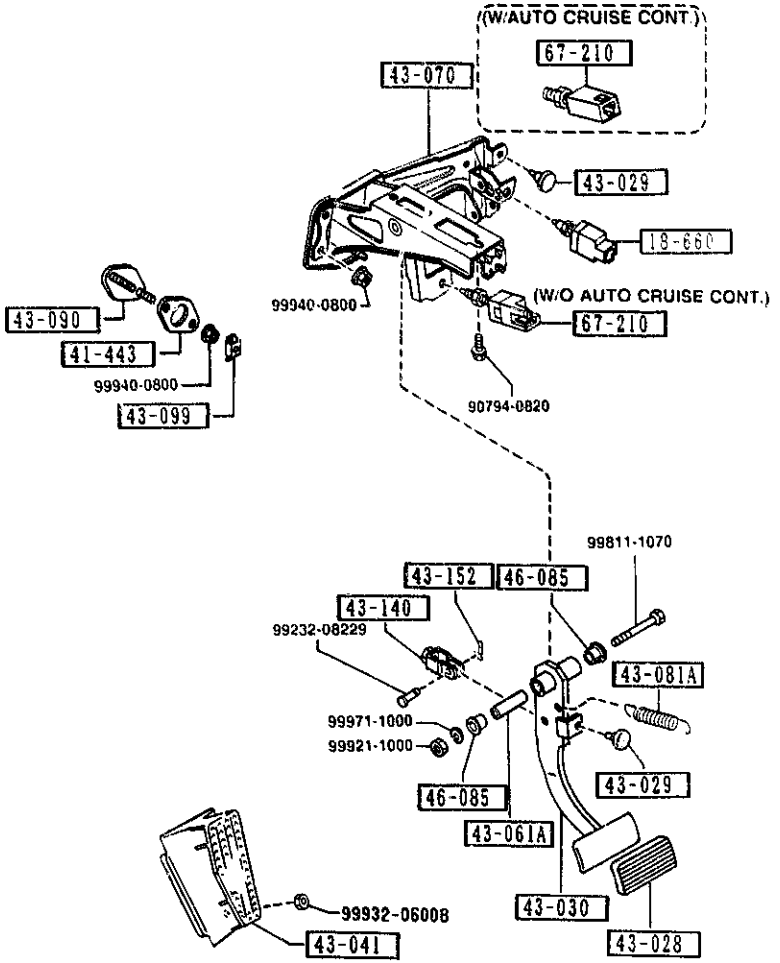

PART NO.	QTY	MODEL/RESTRICTION	MODEL/RESTRICTION	MODEL/RESTRICTION	FROM-TO
43-152		PIN,SNAP			
0001-43-152	1				
46-085		BUSH			
1015-46-085	2				
67-210		SWITCH,STOP			
BR70-66-490A	1	PKG-OPT, (W/AUTO CRUISE CONT)			
0001-66-490A	1	BASE, (W/O AUTO CRUISE CONT.)			

4340 BRAKE MASTER CYLINDER & POWER BRAKE

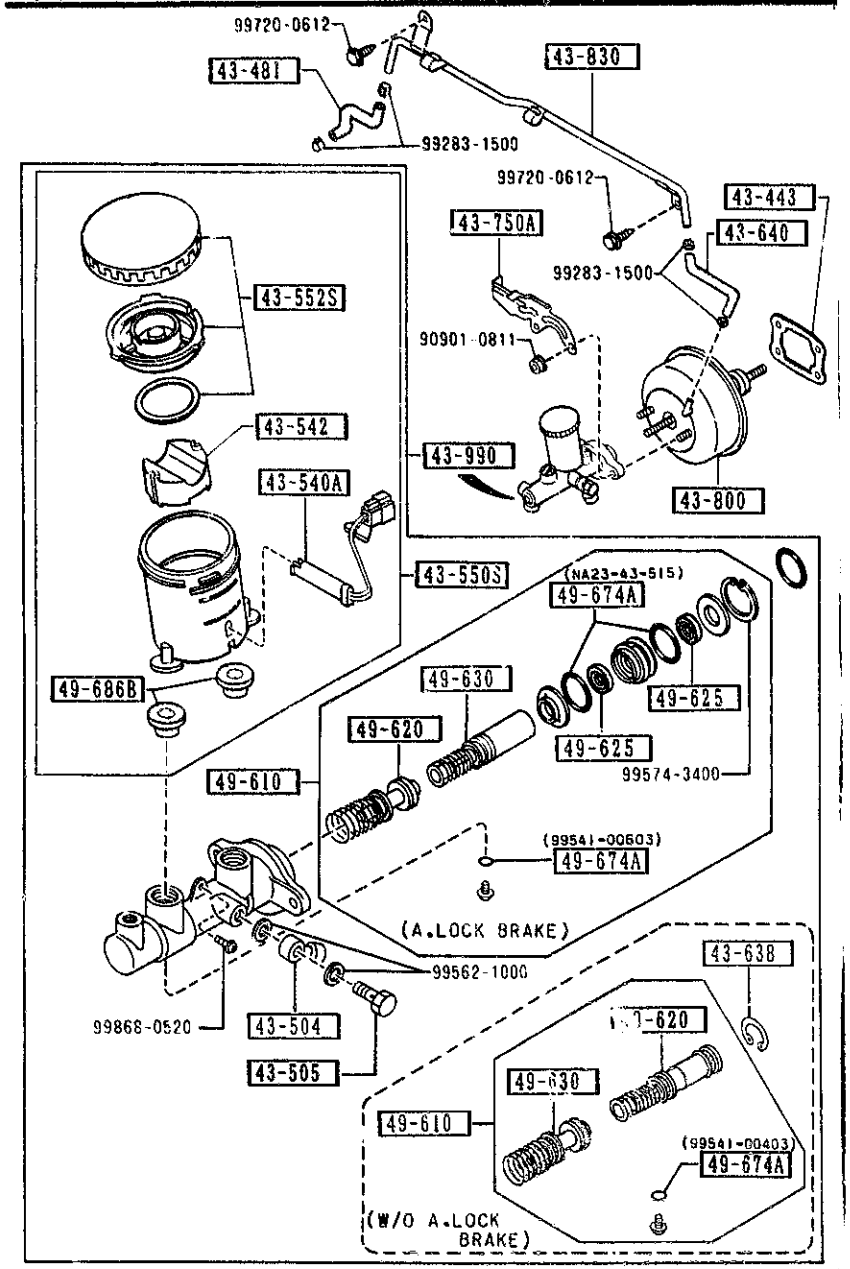

PART NO.	QTY	MODEL/RESTRICTION	MODEL/RESTRICTION	MODEL/RESTRICTION	FROM-TO
43-443		GASKET,VAC POWER ASSIST			
H001-43-443	1	NON ASBESTOS			
43-481		HOSE,VACUUM			
NA01-43-481	1				
43-504		JOINT,PIPE			
W023-43-504	1				
43-505		BOLT,CONNECTOR			
W023-43-505	1				
43-540A		SENSOR,RESERVE TANK			
GA97-43-540	1				
43-542		FLOAT			
3597-43-542	1				
43-550S		TANK SET,RESERVE			
NA23-43-55Z	1	(A.LOCK BRAKE)			
B216-49-680A	1	(W/O A.LOCK BRAKE)			
43-552S		CAP SET,RESERVE TANK			
D001-49-650A	1				
43-638		RING,RETAINING			
GA02-49-638	1	(W/O A.LOCK BRAKE)			
43-640		HOSE,VACUUM			
NA01-43-640	1				
43-750A		HOLDER,P.B.VALVE			
NA01-43-750	1	(W/O A.LOCK BRAKE)			
NA02-43-750A	1	(A.LOCK BRAKE)			
43-800		VACUUM POWER ASSIST			
NA01-43-800	1	(W/O A.LOCK BRAKE)			
NA23-43-800	1	(A.LOCK BRAKE)			

4340 BRAKE MASTER CYLINDER & POWER BRAKE

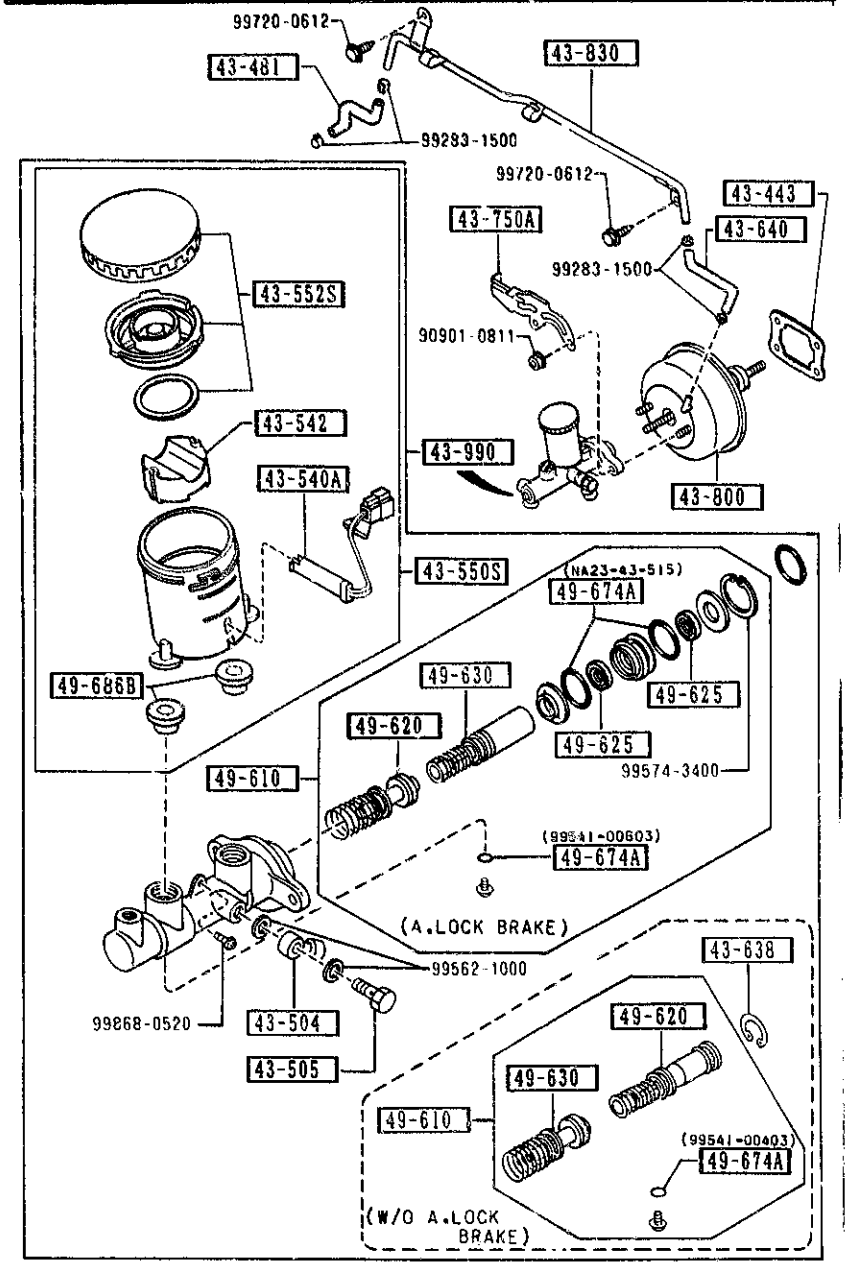

PART NO.	QTY	MODEL/RESTRICTION	MODEL/RESTRICTION	MODEL/RESTRICTION	FROM-TO
43-830		PIPE,VACUUM			
NA01-43-830A	1	(W/O A.LOCK BRAKE)			
NA23-43-830A	1				-0A01
A (NA23-43-830B)					
NA23-43-830B	1	(A.LOCK BRAKE)			0A01-
43-990		CYL.,TANDEM MASTER			
NAY3-43-40Z	1	(A.LOCK BRAKE)			
NA01-43-[illegible]0D	1	(W/O A.LOCK BRAKE)			
49-610		PARTS KIT,INN.-BRAKE			
NAY3-43-41Z	1	(A.LOCK BRAKE)			
BW0A-43-61Z	1	(W/O A.LOCK BRAKE)			
49-620		PISTON,PRIMARY			
BW0A-43-62Z	1	(W/O A.LOCK BRAKE)			
B252-49-620A	1	(A.LOCK BRAKE)			
49-625		CUP,SECONDARY			
NA23-43-625	2	(A.LOCK BRAKE)			
49-630		PISTON,FLOATING			
BW0A-43-63Z	1	(W/O A.LOCK BRAKE)			
NA23-43-63Z	1	(A.LOCK BRAKE)			
49-674A		RING,'O'-MASTER CYL.			
NA23-43-515	2	SHINEI KOGYO (A.LOCK BRAKE)			
99541-00403	1	(W/O A.LOCK BRAKE)			
99541-00603	1	NOK (A.LOCK BRAKE)			
49-686B		BUSH,ELBOW JOINT			
0305-49-686B	2				

0A01 NA35**-213219

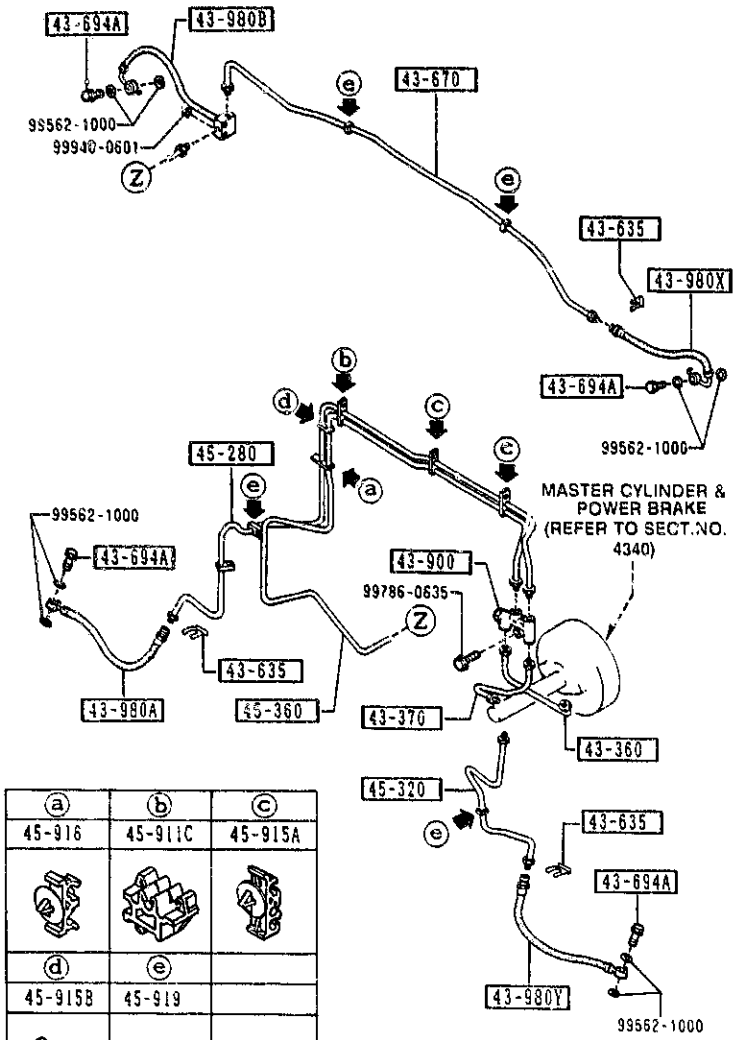

ⓐ	ⓑ	ⓒ
45-916	45-911C	45-915A
ⓓ	ⓔ	
45-915B	45-919	

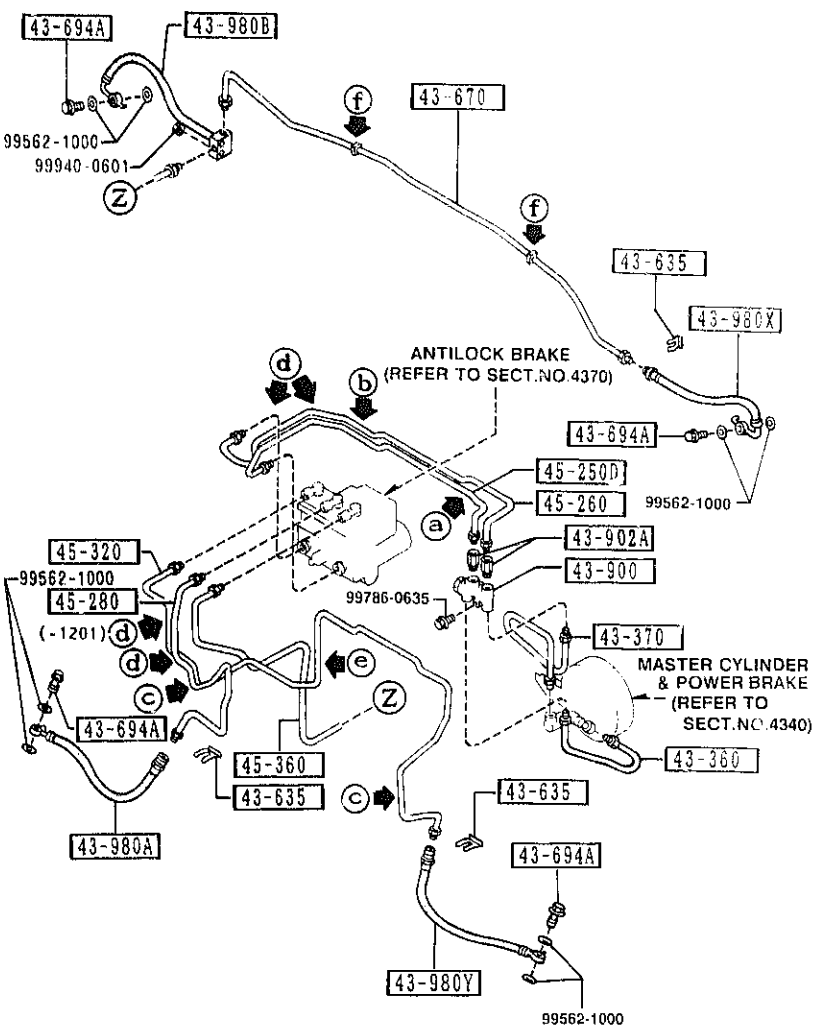

ⓐ	ⓑ	ⓒ	ⓓ	ⓔ	ⓕ
45-910E	45-920	43-607	43-919A	45-919C	45-919

(W/O A,LOCK BRAKE)

(THIS ILLUSTRATION CONSISTS OF 2 PAGES)

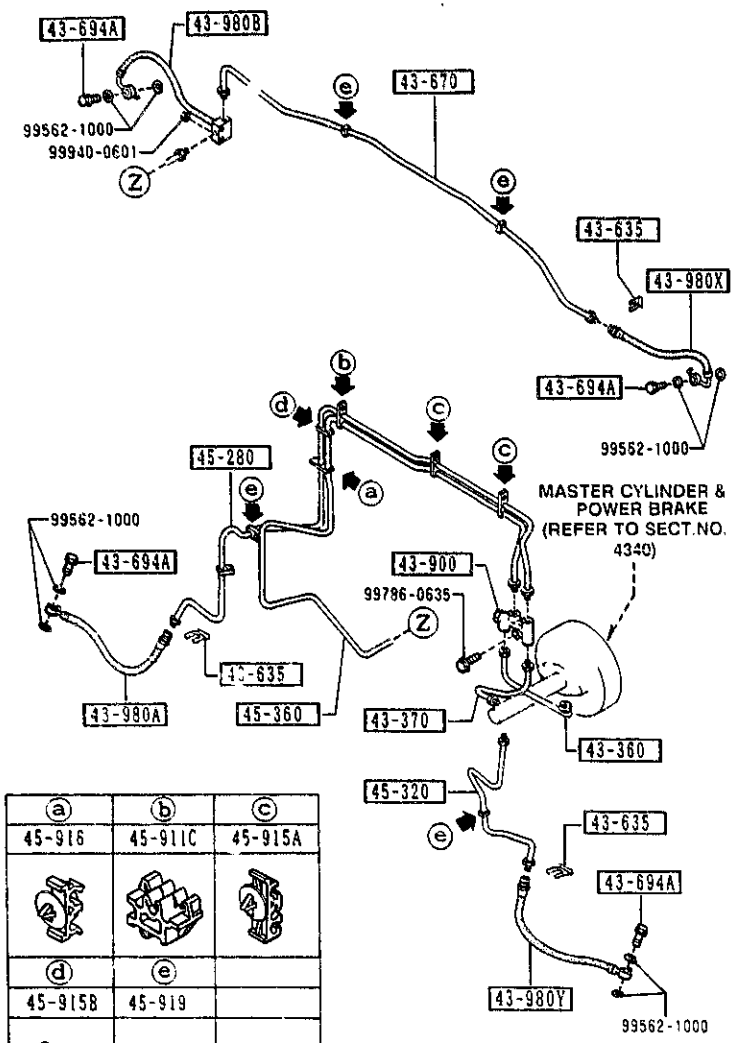

ⓐ	ⓑ	ⓒ
45-916	45-911C	45-915A
ⓓ	ⓔ	
45-915B	45-919	
		

PART NO.	QTY	MODEL/RESTRICTION	MODEL/RESTRICTION	MODEL/RESTRICTION	FROM-TO
43-360		PIPE,BRAKE			
NA01-43-360A	1	(W/O A.LOCK BRAKE)			
NA23-43-360A	1	(A.LOCK BRAKE)			
43-370		PIPE,BRAKE			
NA01-43-370	1	(W/O A.LOCK BRAKE)			
NA23-43-370A	1	(A.LOCK BRAKE)			
43-607		CLIP,RR BRAKE PIPE			
G309-43-607	2	(A.LOCK BRAKE)			
43-635		CLIP,FLEXIBLE HOSE			
W023-43-635	3				
43-670		PIPE,BRAKE-REAR			
NA01-43-670A	1				
43-694A		BOLT,CONNECTOR			
B001-43-694A	4				
43-900		VALVE,DUAL PROPORTIONING			
NA23-43-9Z0A	1	(A.LOCK BRAKE)			
NA01-43-900	1	(W/O A.LOCK BRAKE)			
43-902A		RING'O'			
NA17-43-902	2	(A.LOCK BRAKE)			
43-919A		HOLDER,BRAKE PIPE			
NA20-45-915	4	(A.LOCK BRAKE)			-1201
NA20-45-915	3	(A.LOCK BRAKE)			1201-
43-980A		HOSE(R),FLEXIBLE-FRT			
NA01-43-810A	1				
43-980B		HOSE(R),FLEXIBLE-RR			
NA01-43-980	1				
43-980X		HOSE(L),FLEXIBLE-RR			
NA01-43-990	1				

1201 NA35**-228219

(A.LOCK BRAKE)

(THIS ILLUSTRATION CONSISTS OF 2 PAGES)

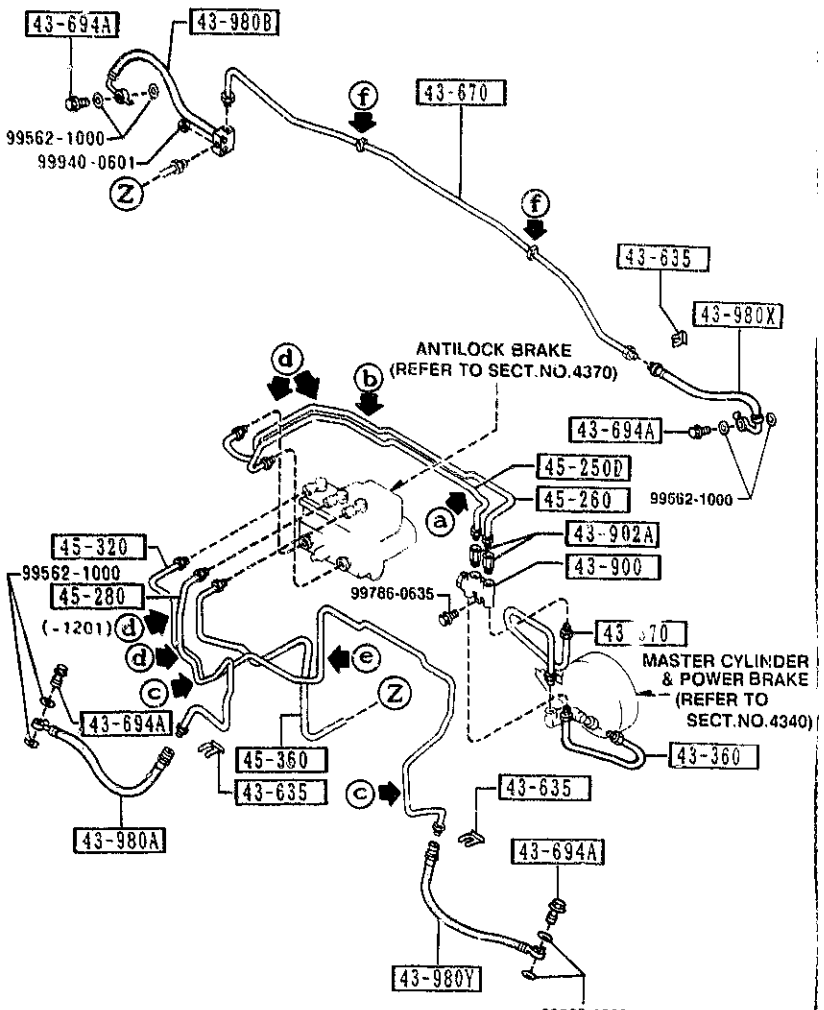

ⓐ	ⓑ	ⓒ	ⓓ	ⓔ	ⓕ
45-910E	45-920	43-607	43-919A	45-919C	45-919
	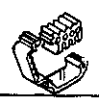				

AUNA02

PART NO.	QTY	MODEL/RESTRICTION	MODEL/RESTRICTION	MODEL/RESTRICTION	FROM-TO
43-980Y		HOSE(L),FLEXIBLE-FRT			
NA01-43-820A	1				
45-250D		PIPE NO.1,BRAKE-FRT			
NA20-45-230C	1	(A.LOCK BRAKE)			
45-260		PIPE NO.2,BRAKE-FRT.			
NA20-45-240C	1	(A.LOCK BRAKE)			
45-230		PIPE(R),BRAKE-FRONT			
NA01-45-280B	1	(W/O A.LOCK BRAKE)			
NA20-45-280B	1	(A.LOCK BRAKE)			
45-320		PIPE(L),BRAKE-FRONT			
NA20-45-320C	1	(A.LOCK BRAKE)			
NA01-45-320B AN(NA01-45-320C)	1				-1B01
NA01-45-320C	1	(W/O A.LOCK BRAKE)			1B01-
45-360		PIPE NO.2,BRAKE-REAR			
NA01-45-360B	1	(W/O A.LOCK BRAKE)			
NA20-45-360D	1	(A.LOCK BRAKE)			
45-910E		HOLDER,PIPE			
NA20-45-910A	1	(A.LOCK BRAKE)			
45-911C		CLIP,PIPE			
NA01-45-911	1	(W/O A.LOCK BRAKE)			
45-915A		HOLDER,PIPE			
B001-45-915	2	(W/O A.LOCK BRAKE)			
45-915B		HOLDER,PIPE			
B001-45-915A	1	(W/O A.LOCK BRAKE)			
45-916		HOLDER,PIPE			
B001-45-916	1	(W/O A.LOCK BRAKE)			
45-919		CLIP,PIPE			
B001-45-919B	2	(A.LOCK BRAKE)			

1B01 NA35**-306993

CAT. AUNA02-07

1993-12

(W/O A.LOCK BRAKE)

(THIS ILLUSTRATION CONSISTS OF 2 PAGES)

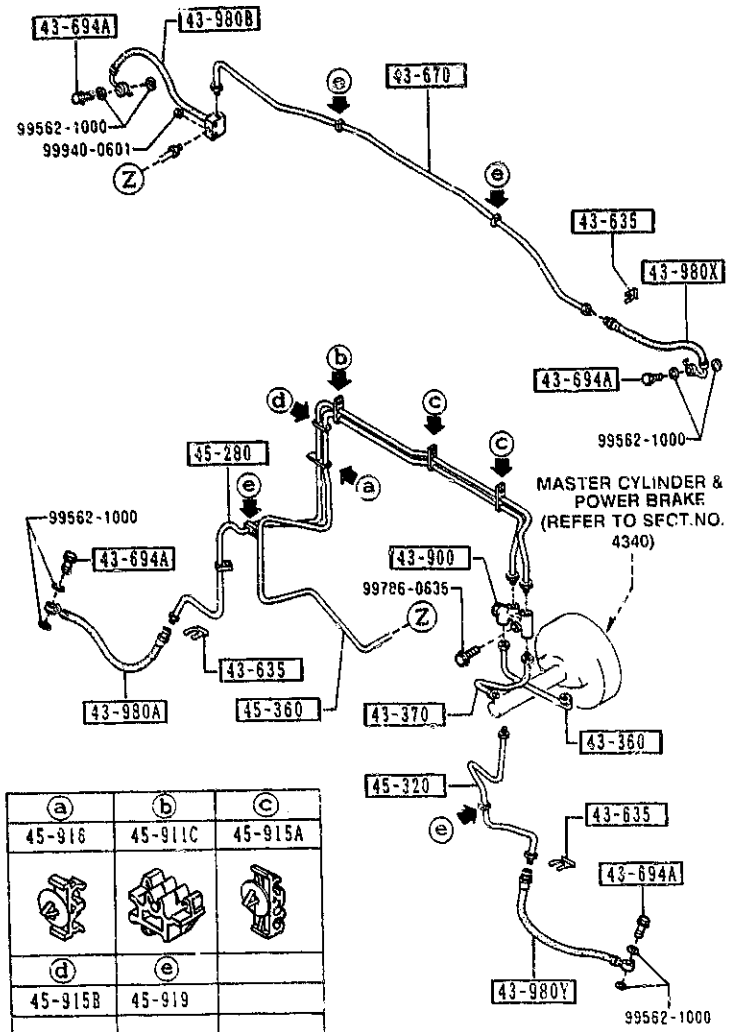

ⓐ	ⓑ	ⓒ
45-916	45-911C	45-915A
ⓓ	ⓔ	
45-915B	45-919	
		

PART NO.	QTY	MODEL/RESTRICTION	MODEL/RESTRICTION	MODEL/RESTRICTION	FROM-TO
CONT'D					
B001-45-919B	4	(W/O A.LOCK BRAKE)			
+---------+					
| 45-919C |		CLIP,PIPE			
+---------+					
G030-45-919	1	(A.LOCK BRAKE)			
+---------+					
| 45-920 |		BRACKET			
+---------+					
NA20-45-920A	1				-2121
A (NA20-45-920B)					
NA20-45-920B	1	(A.LOCK BRAKE)			2121-

2121 NA35✱✱-315566

4370 ANTILOCK BRAKE SYSTEM

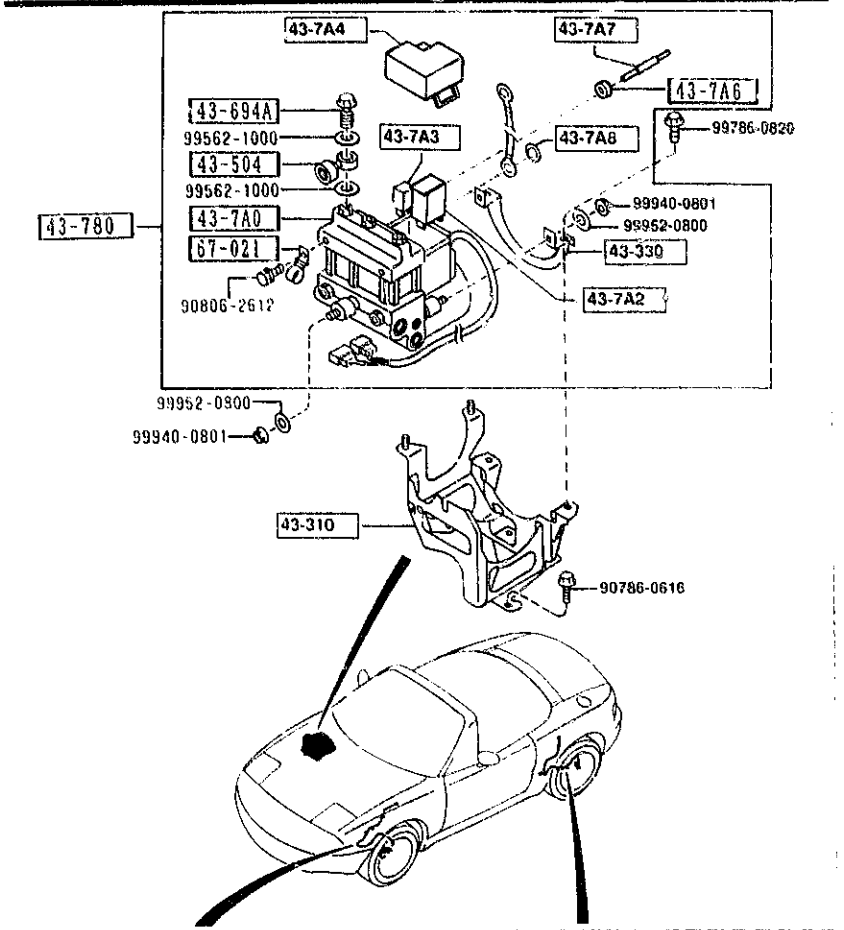

PART NO.	QTY	MODEL/RESTRICTION	MODEL/RESTRICTION	MODEL/RESTRICTION	FROM-TO
43-310		BRACKET NO 1,A.B.S.			
NA23-43-310B	1				
43-330		BRACKET NO.5,A.B.S.			
NA23-43-330B	1				
43-504		JOINT,PIPE			
W023-43-504	3				
43-694A		BOLT,CONNECTOR			
B001-43-694A	3				
43-7A0		HYDRAULIC UNIT,A B S			
NA23-43-7A0B	1				
43-7A2		RELAY,MOTOR-HYD. UNIT			
NA23-43-7A2	1				
43-7A3		RELAY,VALVE-HYD. UNIY			
NA23-43-7A3	1				
43-7A4		COVER'L',HYDRAULIC UNIT			
NA23-43-7A4	1				
43-7A6		RUBBER,MOUNT-HYD. UNIT			
NA23-43-7A6	1				
43-7A7		STUD,HEX-HYD. UNIT			
NA23-43-7A7	1				
43-7A8		WASHER,HYD. UNIT			
NA23-43-7A8	1				
43-701		SENSOR(R),FRT-A.B.S.			
NA23-43-70XB A (NA23-43-70XD)	1				-0B01
NA23-43-70XD	1				0B01-
43-701Z		SENSOR(L),FRT-A.B.S.			
NA23-43-73XB A (NA23-43-73XD)	1				-0B01

0B01 NA35**-217311

4370 ANTILOCK BRAKE SYSTEM

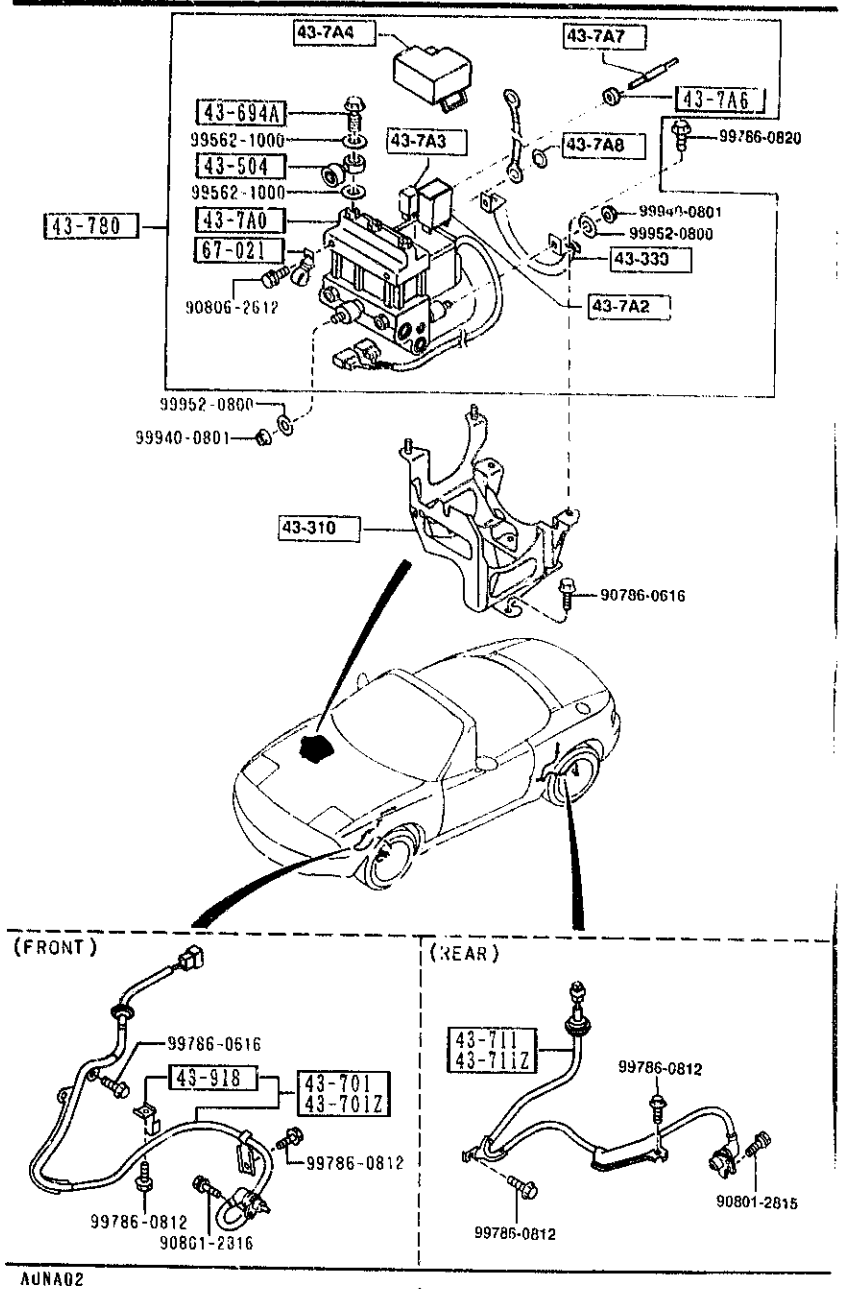

PART NO.	QTY	MODEL/RESTRICTION	MODEL/RESTRICTION	MODEL/RESTRICTION	FROM TO
CONT'D					
NA23-43-73XD	1				0B01-
43-711		SENSOR(R),RR A.B.S.			
NA23-43-71YB	1				
43-711Z		SENSOR(L),RR-A.B.S.			
NA23-43-72YB	1				
43-780		ANTILOCK BRAKE			
NA23-43-780D AN(NA23-43-780E)	1				-0901
NA23-43-780E	1				0901-
43-918		CLIP,SENSOR HARNESS			
NA23-43-705	2				
67-021		CLIP			
BE32-67-021	2				

0901 NA35**-208969
0B01 NA35**-217311