Parts Catalog

Mazda MX-5 MIATA
U.S.A.
('91►'92)

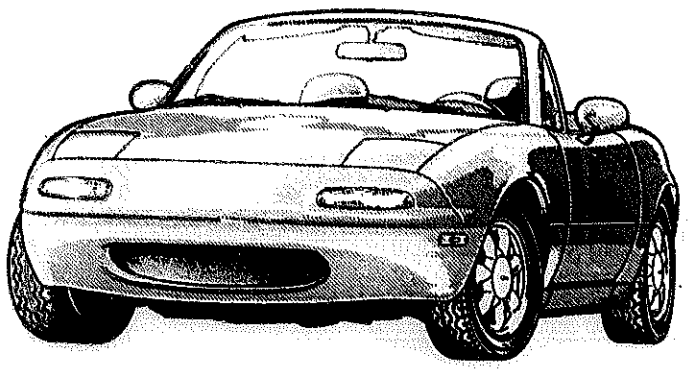

NA35**-200001-350000

Jan.'94 (FINAL)

Catalog No. AU-NA02-07

mazda

©1994 Mazda Motor Corporation

LAYOUT OF CONTENTS / DISPOSITION TYPOGRAPHIQUE DE CONTENU / DISPOSICION DEL CONTENIDO / ANORDNUNG DES INHALTS

- The following is a typical example of the layout of contents on Mazda microfiche parts catalog.
- Voici un exemple typique de la disposition typographique de contenu dans les microfiches de catalogue des pièces de Mazda.
- El siguiente es un ejemplo típico de la disposición del contenido en una microficha del catálogo de repuestos de Mazda.
- Folgendes ist ein typisches Beispiel der Inhaltsanordnung des Mazda Mikrofiche Teilekatalogs.

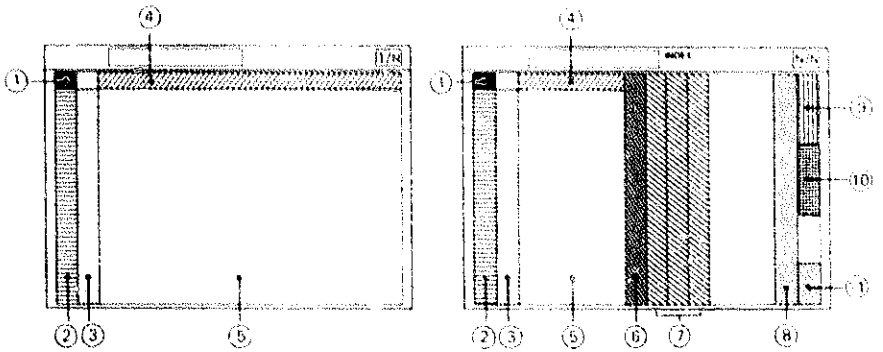

Remark : The items listed under ④ have been deleted from each fiche since Dec. '93

① · Layout of contents
· Disposition Typographique de Contenu
· Disposición del contenido
· Anordnung des Inhalts

② · Pictorial Index
· Index par Schémas
· Indice Gráfico
· Illustrierter Index

③ · Master Section No. Index
· Index des Numéros des Sections Totale
· Indice del Número de la Sección Maéstra
· Hauptabschnittsnummer-Index

④ ~~· Section No. Index for the Column~~
~~· Index des Numéros des Sections pour les Colonnes~~
~~· N° de la Sección para el Indice~~
~~· Abschnittsnummer-Index für die Spalte~~

⑤ · Illustration & Text
· Illustrations et Textes
· Ilustración y Texto
· Abbildung und Text

⑥ · Part No. Index
· Index des Numéros des Pièces
· Indice del N° de Pieza
· Teile-Nr.-Index

⑦ · Alphabetical Index
· Index Alphabétique
· Indice Alfabético
· Alphabetischer Index

⑧ · Model Identification
· Identification des Modèles
· Identificación del Modelo
· Modell-Kennzeichnung

⑨ · Vehicle Identification System
· Système d'Identification de Véhicule
· Sistema de Identification de Vehículo
· Fahrzeug-Identifikationssystem

PICTORIAL INDEX

ENGINE (1/2)

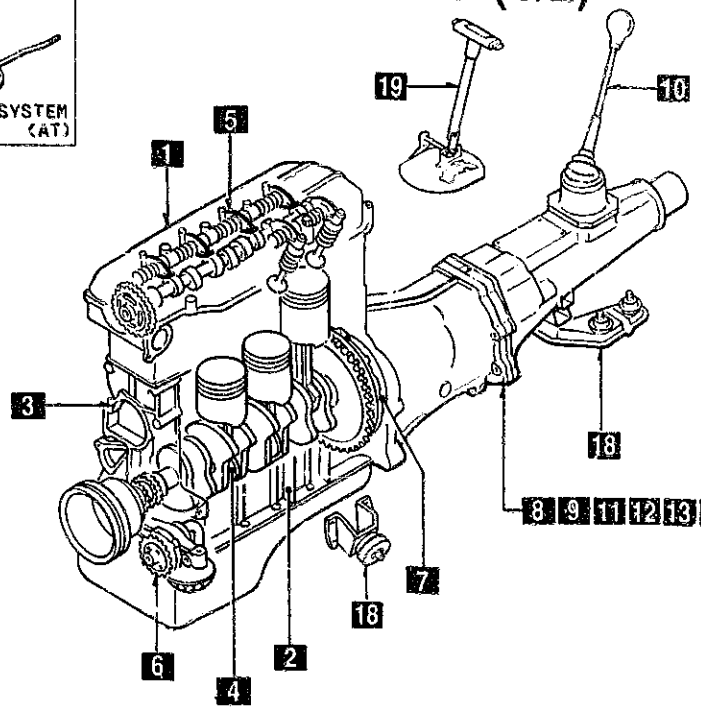

As this illustration is prepared to be applicable to all models, some parts are different in specifications from the parts listed in this parts Catalog.

1000

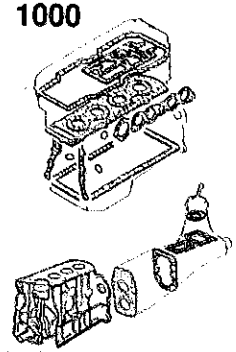

SHORT ENGINE & GASKET SETS

1 1010

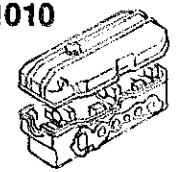

CYLINDER HEAD & COVER

2 1030

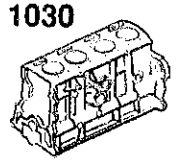

CYLINDER BLOCK

3 1040

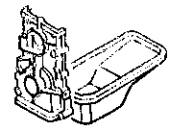

OIL PAN & TIMING COVER

4 1100

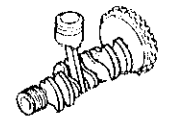

PISTON, CRANKSHAFT & FLYWHEEL

5 1200

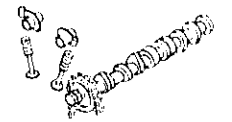

VALVE SYSTEM

19 4600

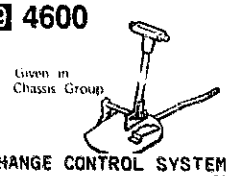

CHANGE CONTROL SYSTEM (AT)

6 1400

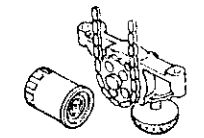

OIL PUMP & FILTER

18 3900

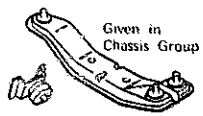

ENGINE & T/MISSION MOUNTINGS

7 1600

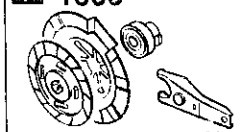

CLUTCH DISC & COVER (MANUAL)

17 1960



GASKET & SEAL KIT (AUTOMATIC)

8 1700

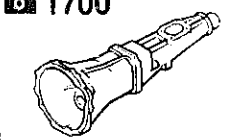

TRANSMISSION CASE (MANUAL)

16 1950

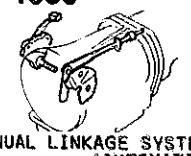

MANUAL LINKAGE SYSTEM (AUTOMATIC)

9 1710

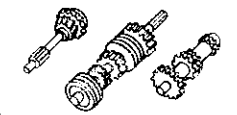

TRANSMISSION GEARS (MANUAL)

15 1940

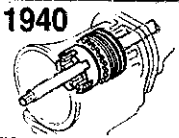

GOVERNOR, LOW & REVERSE PISTON (AUTOMATIC)

14 1930

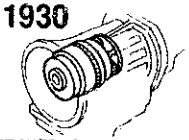

CLUTCHES & PLANETARY GEARS (AUTOMATIC)

13 1925



CONTROL VALVE (AUTOMATIC)

12 1920

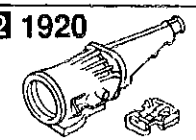

TRANSMISSION CASE & MAIN CONTROL SYSTEM (AUTOMATIC)

11 1910

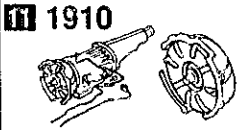

TORQUE CONVERTER, OIL PUMP & PIPINGS (AUTOMATIC)

10 1720

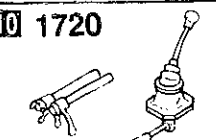

CHANGE CONTROL SYSTEM (MANUAL)

PICTORIAL INDEX

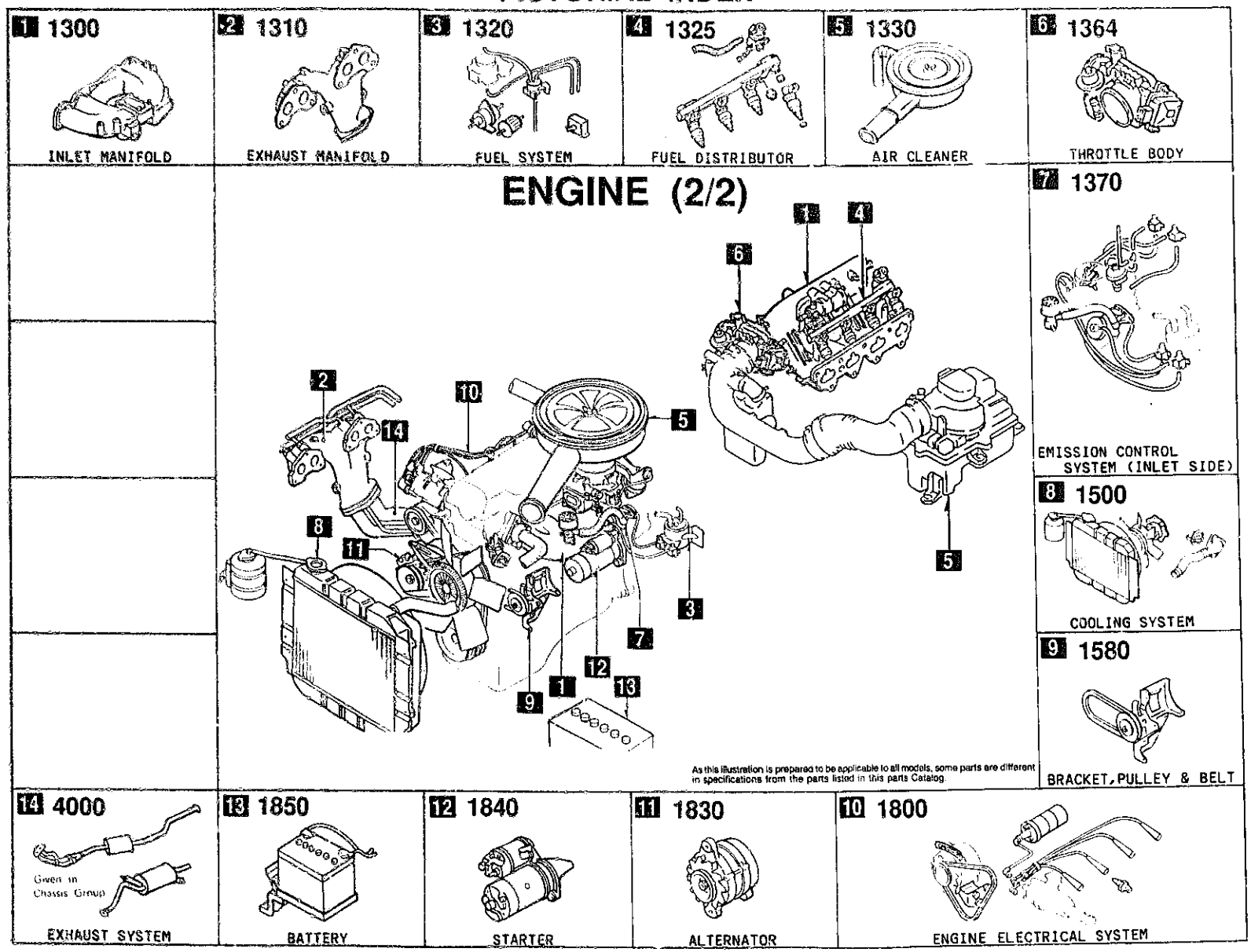

PICTORIAL INDEX

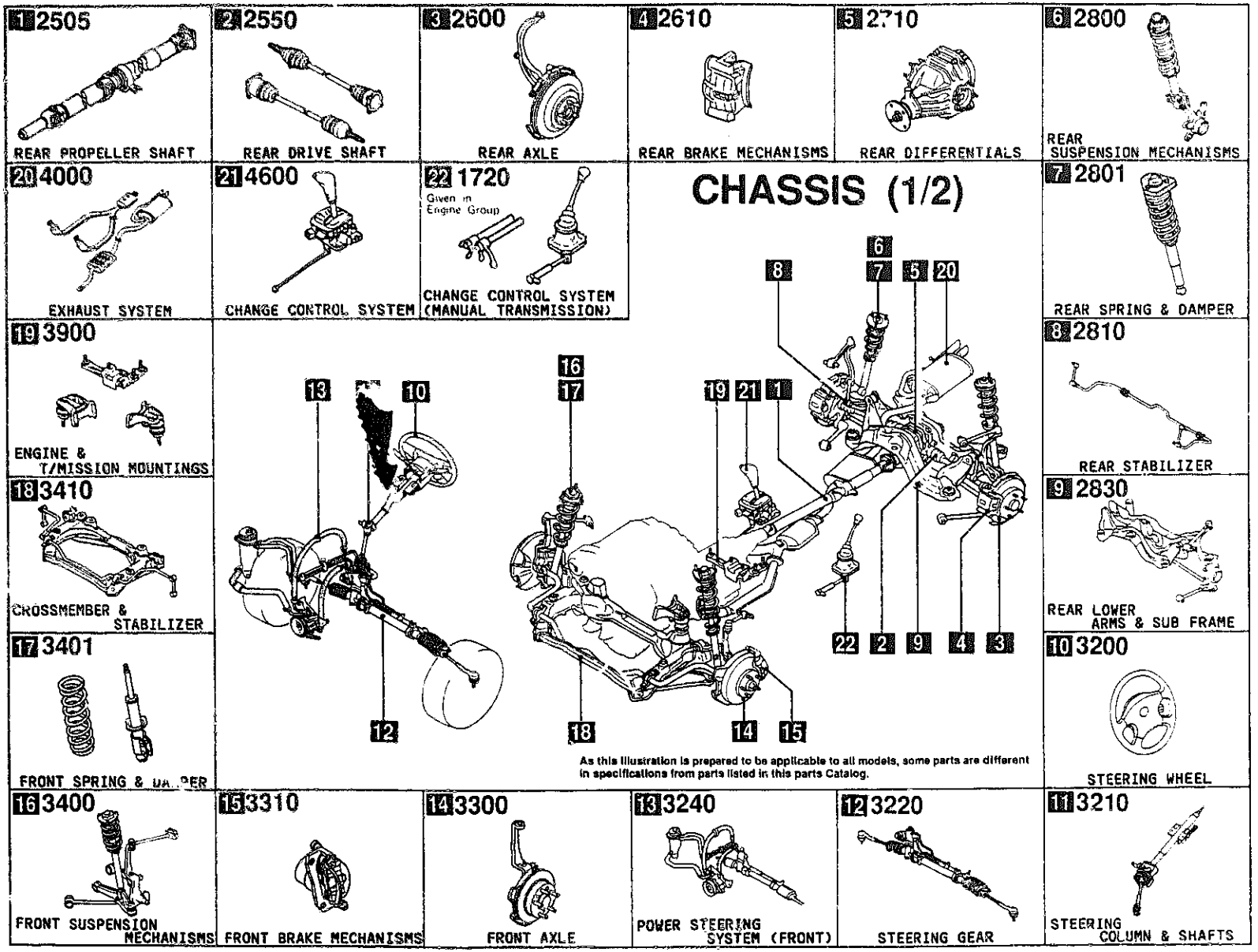

PICTORIAL INDEX

1 3700 — TIRES & JACK

2 4140 — CLUTCH RELEASE & MASTER CYLINDERS

3 4145 — CLUTCH PIPINGS

4 4160 — ACCELERATOR CONTROL SYSTEM

5 4200 — FUEL TANK

6 4210 — FUEL LID OPENER

7 4300 — CLUTCH & BRAKE PEDALS

8 4340 — BRAKE MASTER CYLINDER & POWER BRAKE

9 4360 — BRAKE PIPINGS

10 4370 — ANTILOCK BRAKE SYSTEM

11 4400 — PARKING BRAKE SYSTEM

12 4500 — FUEL PIPINGS

CHASSIS (2/2)

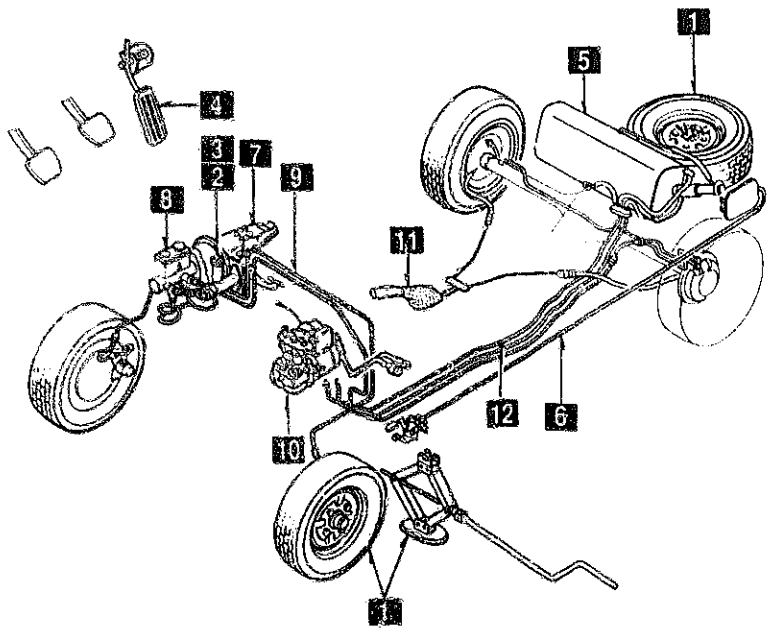

As this illustration is prepared to be applicable to all models, some parts are different in specifications from parts listed in this parts Catalog.

PICTORIAL INDEX

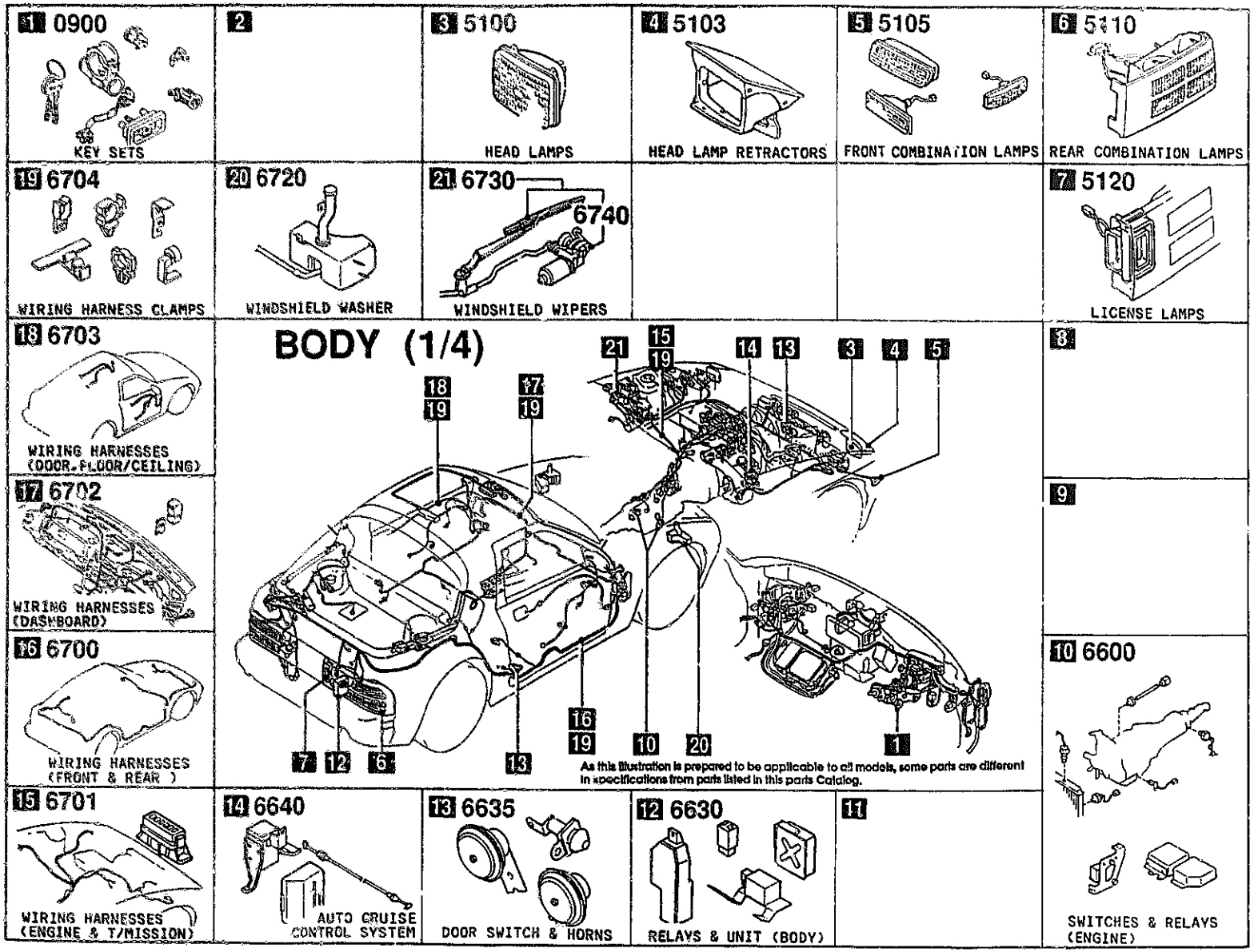

PICTORIAL INDEX

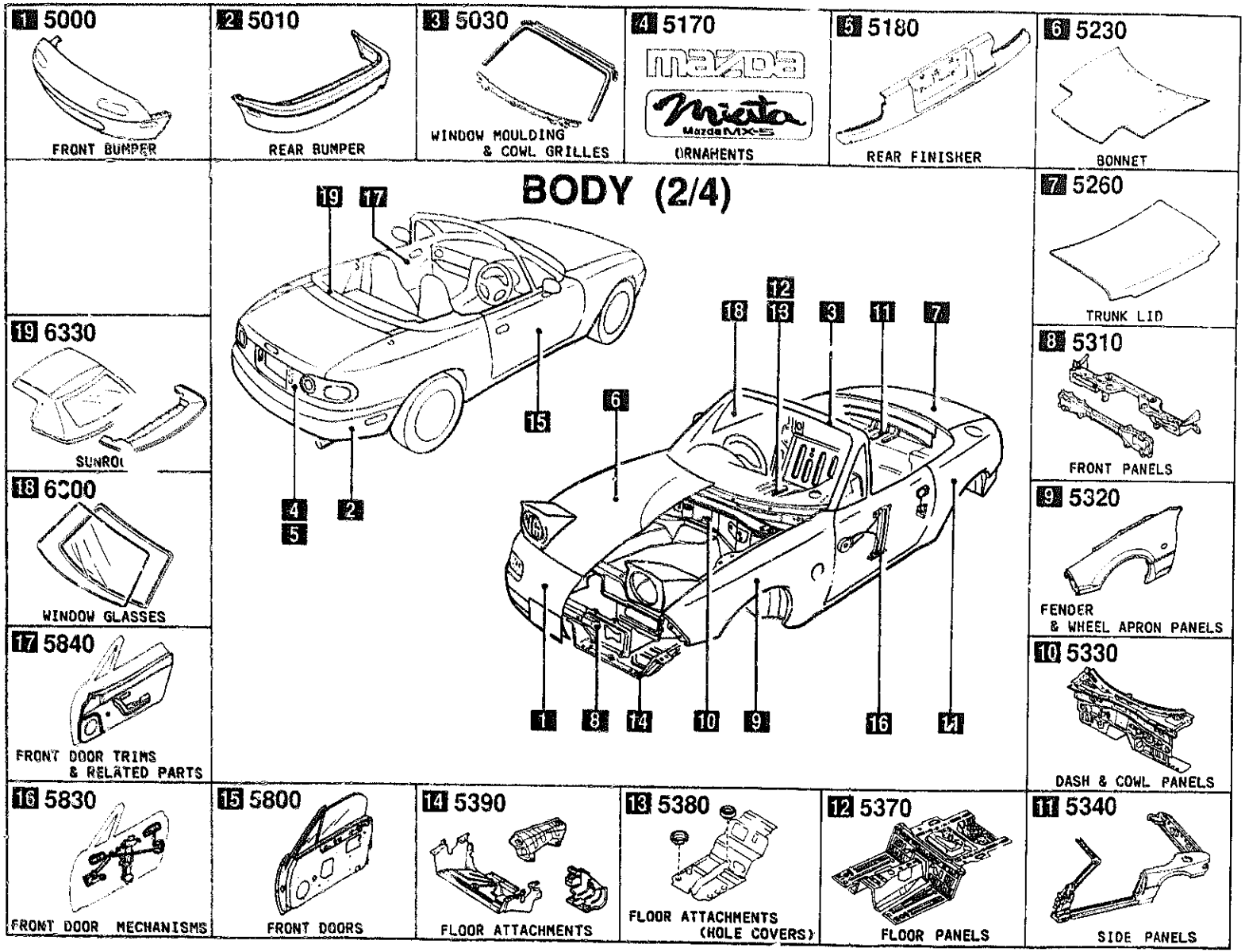

PICTORIAL INDEX

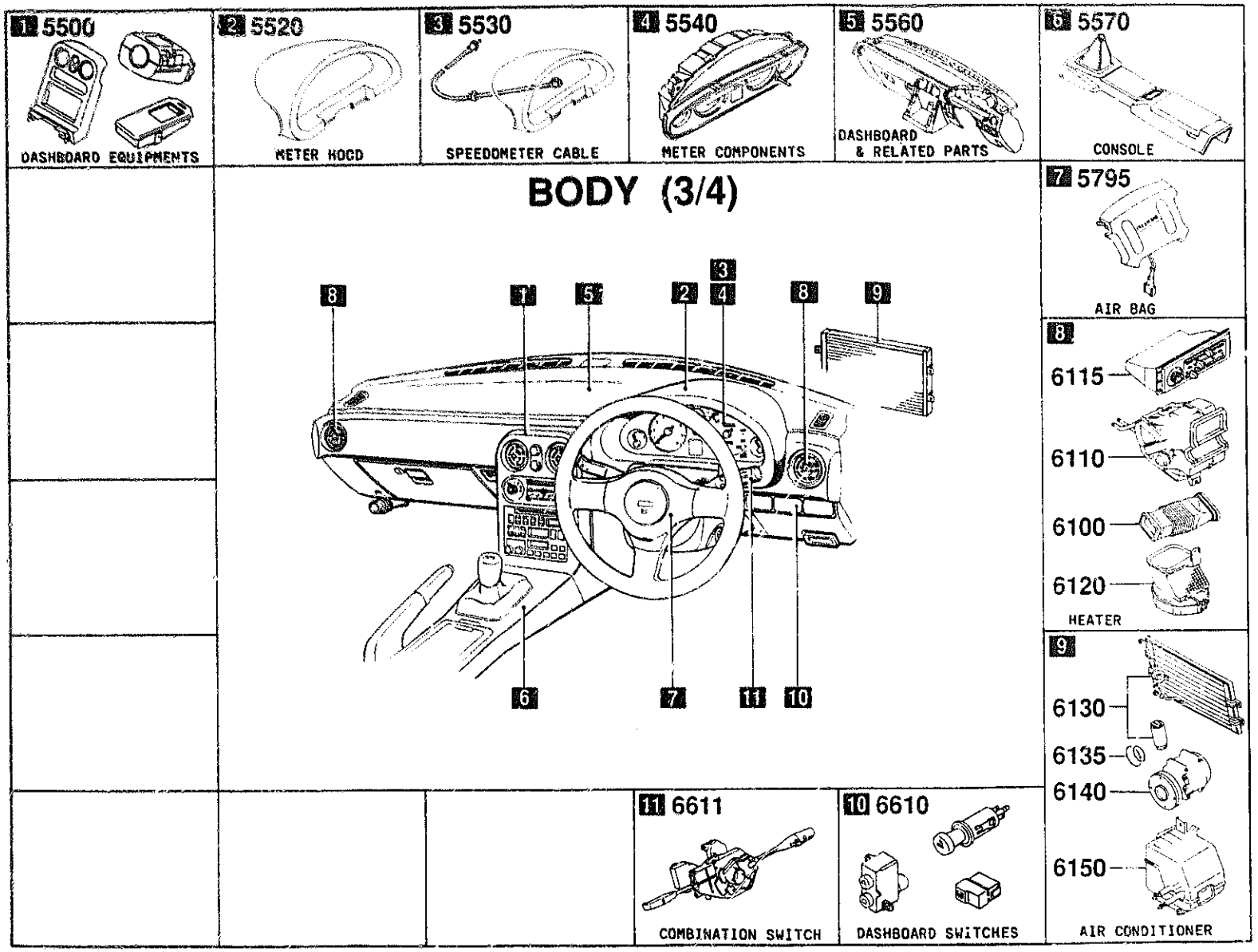

PICTORIAL INDEX

1 5580 VENTILATOR

2 5700 SEATS

3 5790 SEAT BELTS

4 6680 AUDIO SYSTEMS (RADIO & TAPE DECK)

5 6682 AUDIO SYSTEMS (ANTENNA & SPEAKER)

6 6820 FRONT HEADER TRIM & PILLAR TRIMS

7 6840 TRIMS & SCUFF PLATES

8 6860 FLOOR MATS & PADS

9 6870 SERVICE TOOLS

10 6900 VISORS, ASSIST HANDLES & MIRRORS

11 6930 CAUTION PLATES & LABELS

12 7250 QUARTER WINDOW & TRIMS

BODY (4/4)

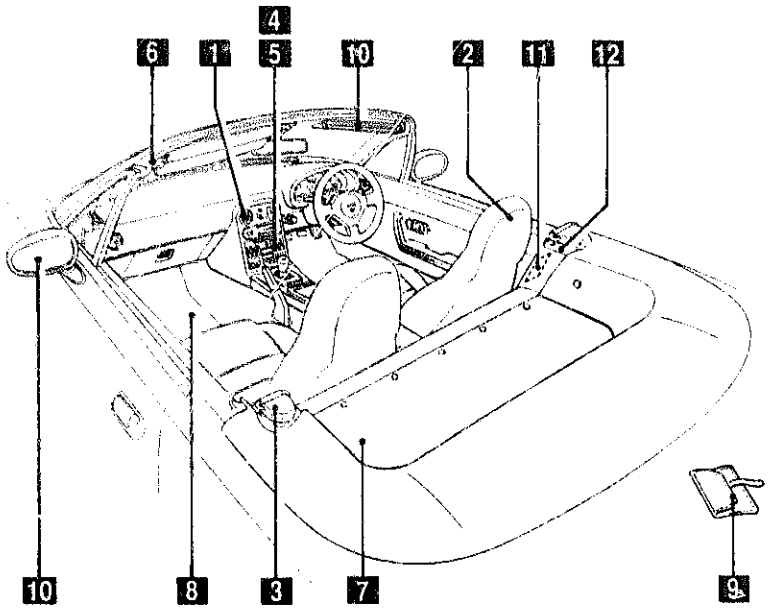

As this illustration is prepared to be applicable to all models, some parts are different in specifications from parts listed in this parts Catalog.

SECTION NAME INDEX (ENGINE)

LO.NO	SEC.NO	SECTION NAME	LO.NO	SEC.NO	SECTION NAME	LO.NO	SEC.NO	SECTION NAME
1-C03	1000	ENGINE & GASKET SETS						
1-D03	1010	CYLINDER HEAD & COVER						
1-G03	1030	CYLINDER BLOCK						
1-I03	1040	OIL PAN & TIMING COVER						
1-K03	1100	PISTON,CRANKSHAFT & FLYWHEEL						
1-N03	1200	VALVE SYSTEM						
1-D04	1300	INLET MANIFOLD						
1-E04	1310	EXHAUST MANIFOLD						
1-F04	1320	FUEL SYSTEM						
1-H04	1325	FUEL DISTRIBUTOR						
1-I04	1330	AIR CLEANER						
1-K04	1364	THROTTLE BODY						
1-L04	1370	EMISSION CONTROL SYSTEM (INLET SIDE)						
1-M04	1400	OIL PUMP & FILTER						
1-C05	1500	COOLING SYSTEM						
1-G05	1580	BRACKET,PULLEY & BELT						
1-C06	1600	CLUTCH DISC & COVER (MANUAL)						
1-D06	1700	TRANSMISSION CASE (MANUAL)						
1-E06	1710	TRANSMISSION GEARS(MANUAL)						
1-K06	1720	CHANGE CONTROL SYSTEM (MANUAL)						
1-N06	1800	ENGINE ELECTRICAL SYSTEM						
1-D07	1830	ALTERNATOR						
1-G07	1840	STARTER						
1-I07	1850	BATTERY						
1-J07	1910	TORQUE CONVERTER,OIL PUMP & PIPINGS (AUTOMATIC)						
1-M07	1920	TRANSMISSION CASE & MAIN CONTROL SYSTEM (AUTOMATIC)						
1-G08	1925	CONTROL VALVE (AUTOMATIC)						
1-K08	1930	CLUTCHES & PLANETARY GEARS (AUTOMATIC)						
1-F09	1940	GOVERNOR, LOW & REVERSE PISTON (AUTOMATIC)						
1-I09	1950	MANUAL LINKAGE SYSTEM (AUTOMATIC)						
1-K09	1960	GASKET & SEAL KIT (AUTOMATIC)						

CATLOG-NO= AUNA02-07

DATE. 1993-12

SECTION NAME INDEX (CHASSIS)

LO.NO	SEC.NO	SECTION NAME
1-C11	2505	REAR PROPELLER SHAFT
1-D11	2550	REAR DRIVE SHAFT
1-E11	2600	REAR AXLE
1-G11	2610	REAR BRAKE MECHANISMS
1-I11	2710	REAR DIFFERENTIALS (NORMAL DIFF.)
1-N11	2710 A	REAR DIFFERENTIALS (LIMITED SLIP DIFF.)
1-G12	2800	REAR SUSPENSION MECHANISMS
1-H12	2801	REAR SPRING & DAMPER
1-I12	2810	REAR STABILIZER
1-J12	2830	REAR LOWER ARMS & SUB FRAME
1-L12	3200	STEERING WHEEL
1-M12	3210	STEERING COLUMN & SHAFTS
1-N12	3220	STEERING GEAR (W/O POWER STEERING)
1-D13	3220 A	STEERING GEAR (W/ POWER STEERING)
1-G13	3240	POWER STEERING SYSTEM
1-I13	3300	FRONT AXLE
1-J13	3310	FRONT BRAKE MECHANISMS
1-L13	3400	FRONT SUSPENSION MECHANISMS
1-N13	3401	FRONT SPRING & DAMPER
1-C14	3410	CROSSMEMBER & STABILIZER
1-D14	3700	TIRES & JACK
1-C15	3900	ENGINE & T/MISSION MOUNTINGS
1-D15	4000	EXHAUST SYSTEM
1-F15	4140	CLUTCH RELEASE & MASTER CYLINERS (MANUAL TRANSMISSION)
1-G15	4145	CLUTCH PIPINGS (MANUAL TRANSMISSION)
1-H15	4160	ACCELERATOR CONTROL SYSTEM
1-I15	4200	FUEL TANK
1-L15	4210	FUEL LID OPENER
1-M15	4300	CLUTCH & BRAKE PEDALS (MANUAL TRANSMISSION)
1-D16	4300A	BRAKE PEDALS (AUTOMATIC TRANSMISSION)
1-F16	4340	BRAKE MASTER CYLINDER & POWER BRAKE
1-H16	4360	BRAKE PIPINGS
1-L16	4370	ANTILOCK BRAKE SYSTEM
2-C03	4400	PARKING BRAKE SYSTEM
2-E03	4500	FUEL PIPINGS
2-G03	4600	CHANGE CONTROL SYSTEM (AT)

SECTION NAME INDEX (BODY)

LO.NO	SEC.NO	SECTION NAME
2-C05	0900	KEY SETS
2-F05	5000	FRONT BUMPER
2-I05	5010	REAR BUMPER
2-K05	5030	WINDOW MOULDING & COWL GRILLES
2-L05	5100	HEAD LAMPS
2-M05	5103	HEAD LAMP RETRACTORS
2-D06	5105	FRONT COMBINATION LAMPS
2-F06	5110	REAR COMBINATION LAMPS
2-I06	5120	LICENSE LAMPS
2-J06	5170	ORNAMENTS
2-K06	5180	REAR FINISHER
2-M06	5230	BONNET
2-C07	5260	TRUNK LID
2-E07	5310	FRONT PANELS
2-F07	5320	FENDER & WHEEL APRON PANELS
2-I07	5330	DASH & COWL PANELS
2-J07	5340	SIDE PANELS
2-C08	5370	FLOOR PANELS
2-F08	5380	FLOOR ATTACHMENTS (HOLE COVERS)
2-G08	5390	FLOOR ATTACHMENTS
2-C09	5500	DASHBOARD EQUIPMENTS
2-E09	5520	METER HOOD
2-F09	5530	SPEEDOMETER CABLE
2-G09	5540	METER COMPONENTS
2-J09	5560	DASHBOARD & RELATED PARTS
2-M09	5570	CONSOLE
2-E10	5580	VENTILATOR
2-G10	5700	SEATS
2-E11	5790	SEAT BELTS
2-F11	5795	AIR BAG
2-G11	5800	FRONT DOORS
2-J11	5830	FRONT DOOR MECHANISMS
2-N11	5840	FRONT DOOR TRIMS & RELATED PARTS
2-C13	6100	HEATER
2-D13	6110	HEATER UNIT COMPONENTS
2-E13	6115	HEATER CONTROLS COMPONENTS
2-G13	6120	HEATER BLOWER COMPONENTS
2-H13	6130	AIR CONDITIONER
2-L13	6135	O RING SET,PIPING
2-M13	6140	COMPRESSOR COMPONENTS (AIR CONDITIONER)
2-C14	6150	COOLING UNIT (AIR CONDITIONER)
2-D14	6300	WINDOW GLASSES
2-E14	6330	SUNROOF
2-E15	6600	SWITCHES & RELAYS (ENGINE)
2-I15	6610	DASHBOARD SWITCHES
2-J15	6611	COMBINATION SWITCH
2-K15	6630	RELAYS & UNIT (BODY)
2-M15	6635	DOOR SWITCH & HORNS
2-N15	6640	AUTO CRUISE CONTROL SYSTEM
2-C16	6680	AUDIO SYSTEMS (RADIO & TAPE DECK)
2-E16	6682	AUDIO SYSTEMS (ANTENNA & SPEAKER)
2-G16	6700	WIRING HARNESSES(FRONT & REAR)
2-J16	6701	WIRING HARNESSES(ENGINE & T/MISSION)
2-L16	6702	WIRING HARNESSES(DASHBOARD)
2-M16	6703	WIRING HARNESSES(DOOR,FLOOR/CEILING)
3-C03	6704	WIRING HARNESS CLAMPS
3-F03	6720	WINDSHIELD WASHER
3-K03	6730	WINDSHIELD WIPERS
3-M03	6740	WIPER MOTOR COMPONENTS(FRONT)
3-N03	6820	FRONT HEADER TRIM & PILLAR TRIMS
3-C04	6840	TRIMS & SCUFF PLATES
3-E04	6860	FLOOR MATS & PADS
3-H04	6870	SERVICE TOOLS
3-I04	6900	VISORS,ASSIST HANDLES & MIRRORS
3-K04	6930	CAUTION PLATES & LABELS
3-M04	7250	QUARTER WINDOW & TRIMS

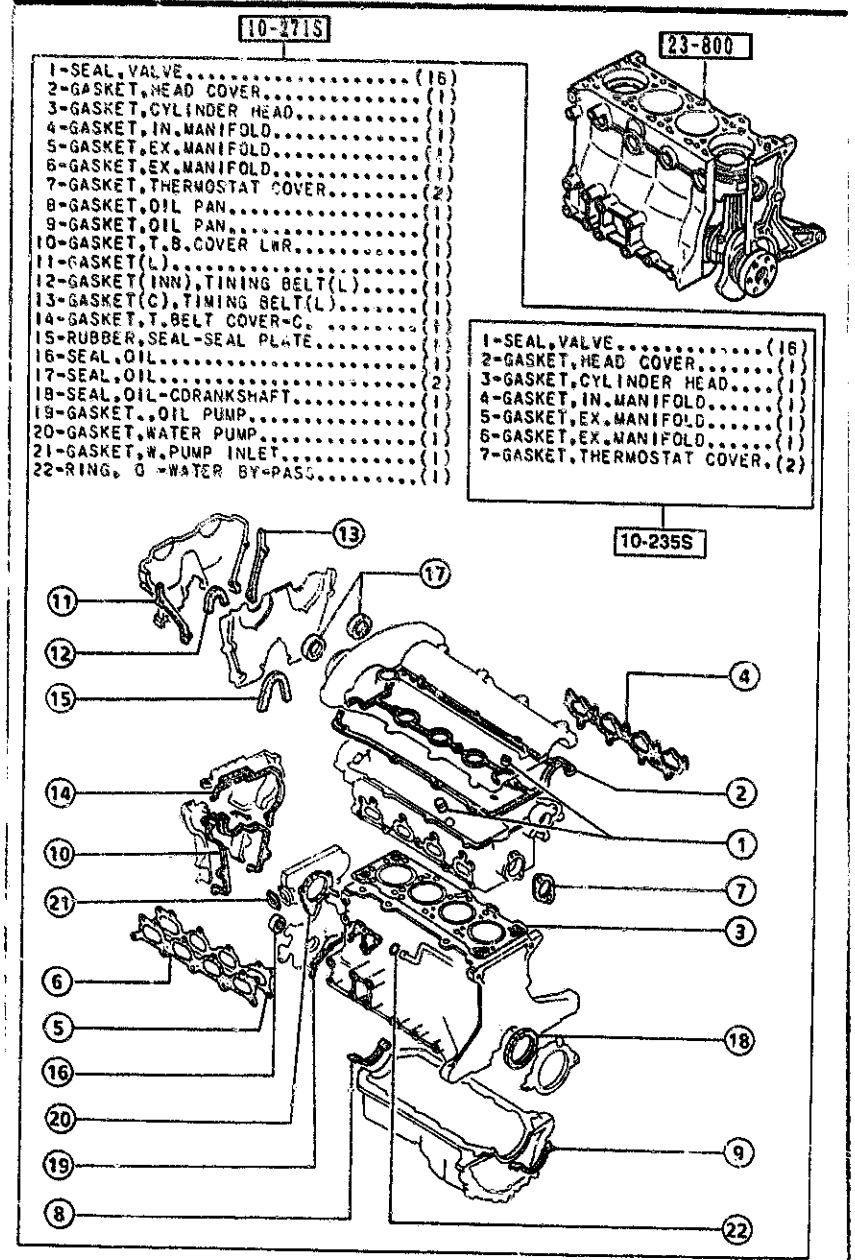

PART NO.	QTY	MODEL/RESTRICTION	MODEL/RESTRICTION	MODEL/RESTRICTION	FROM-TO
10-235S		GASKET SET,CYL. HEAD			
8AN1-10-235	1				-1301
*8AN1-10-235A	1				1301-
10-271S		GASKET SET,ENGINE			
8AN1-10-271	1				-0910
8AN1-10-271B	1	NON ASBESTOS			0910-
23-800		ENGINE,SHORT			
B64E-02-200B	1	(MT)			-0910
B64J-02-200A	1	(AT)			-0910
B64J-02-200B	1	(AT)			0910-
B64E-02-200C A (B64E-02-200D)	1				0910-2101
B64E-02-200D	1	(MT)			2101-

0910 NA35**-209446
1301 NA35**-231464
2101 NA35**-313914

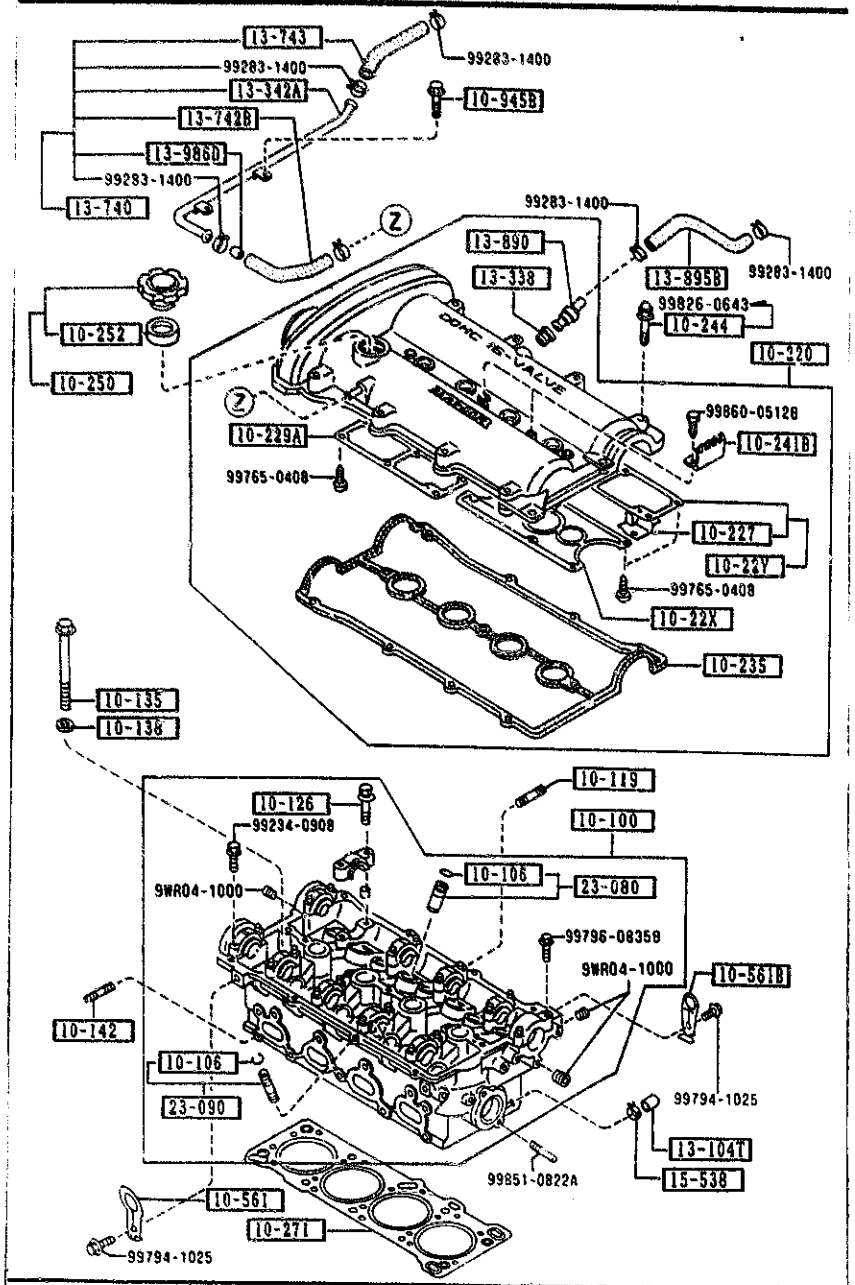

AUNA02

1010 -1 CYLINDER HEAD & COVER

PART NO.	QTY	MODEL/RESTRICTION	MODEL/RESTRICTION	MODEL/RESTRICTION	FROM-TO
10-100		HEAD,CYLINDER			
B61P-10-100B	1				-0B19
A (B61P-10-100C)					
B61P-10-100C	1				0B19-1C01
A (B61P-10-100D)					
B61P-10-100D	1				1C01-
10-106		CLIP,VALVE GUIDE			
B660-10-106	16				
10-119		STUD			
FE4J-13-146	3				
10-126		BOLT,CAMSHAFT CAP			
B660-10-126	20				
10-135		BOLT,CYLINDER HEAD			
B660-10-135A	10				
10-138		WASHER,PLAIN CYL. HEAD			
B630-10-138A	10				
10-142		STUD,EX. MANIFOLD			
B660-10-104A	9				-0801
B661-10-104	9				0801-
10-22X		PLATE,OIL BAFFLE-IN. SIDE			
B61P-10-22X	1				
10-22Y		PLATE,OIL BAFFLE-EX.			
B6S7-10-22Y	1				
10-220		COVER,CYLINDER HEAD			
B61P-10-210C	1				-1301
A (B61P-10-210D)					
B61P-10-210D	1				1301-
10-227		PLATE,BAFFLE			
B61P-10-227	1				
10-229A		PLATE,OIL BAFFLE			

0801 NA35**-205068
0B19 NA35**-219322
1301 NA35**-231464
1C01 NA35**-309801

CAT. AUNA02-07

1993-12

1010 CYLINDER HEAD & COVER

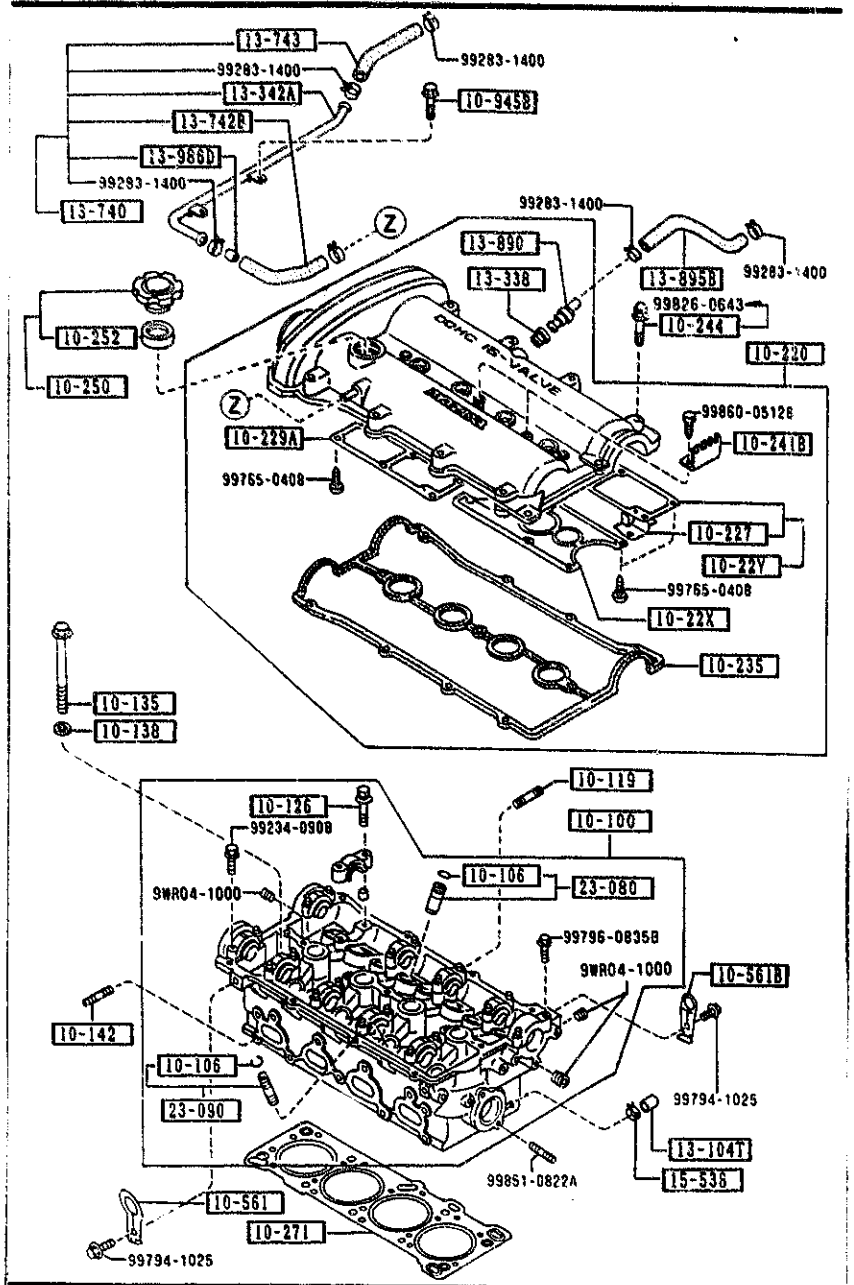

PART NO.	QTY	MODEL/RESTRICTION	MODEL/RESTRICTION	MODEL/RESTRICTION	FROM-TO
CONT'D					
B6S7-10-225	2				
10-235		GASKET,HEAD COVER			
B61P-10-235 A (B61P-10-235A)	1	NON ASBESTOS			-1301
B61P-10-235A	1	NON ASBESTOS			1301-
10-241B		PROTECTOR,HT.CORD-S. TANK			
B660-10-241	2				
10-244		BOLT,CYLINDER HEAD C OVER			
B660-10-244	11				-1117
10-250		CAP,OIL FILLER			
0453-10-250A	1				
10-252		GASKET			
0324-10-252	1				
10-271		GASKET,CYLINDER HEAD			
B6F4-10-271A	1	NON ASBESTOS			
10-561		HANGER,ENGINE			
B660-10-561	1				
10-561B		HANGER,ENGINE-REAR			
B61P-10-565	1				
10-945B		BOLT			
B61P-13-366	2				
13-104T		CAP,SEALING			
FEA7-13-104	1				
13-338		SEAL,RUBBER			
E301-13-338A	1				
13-342A		PIPE,VENTILATION			
B61P-13-74XA	1				

1117 NA35**-225452
1301 NA35**-231464

AUNA02

CAT. AUNA02-07

1993-12

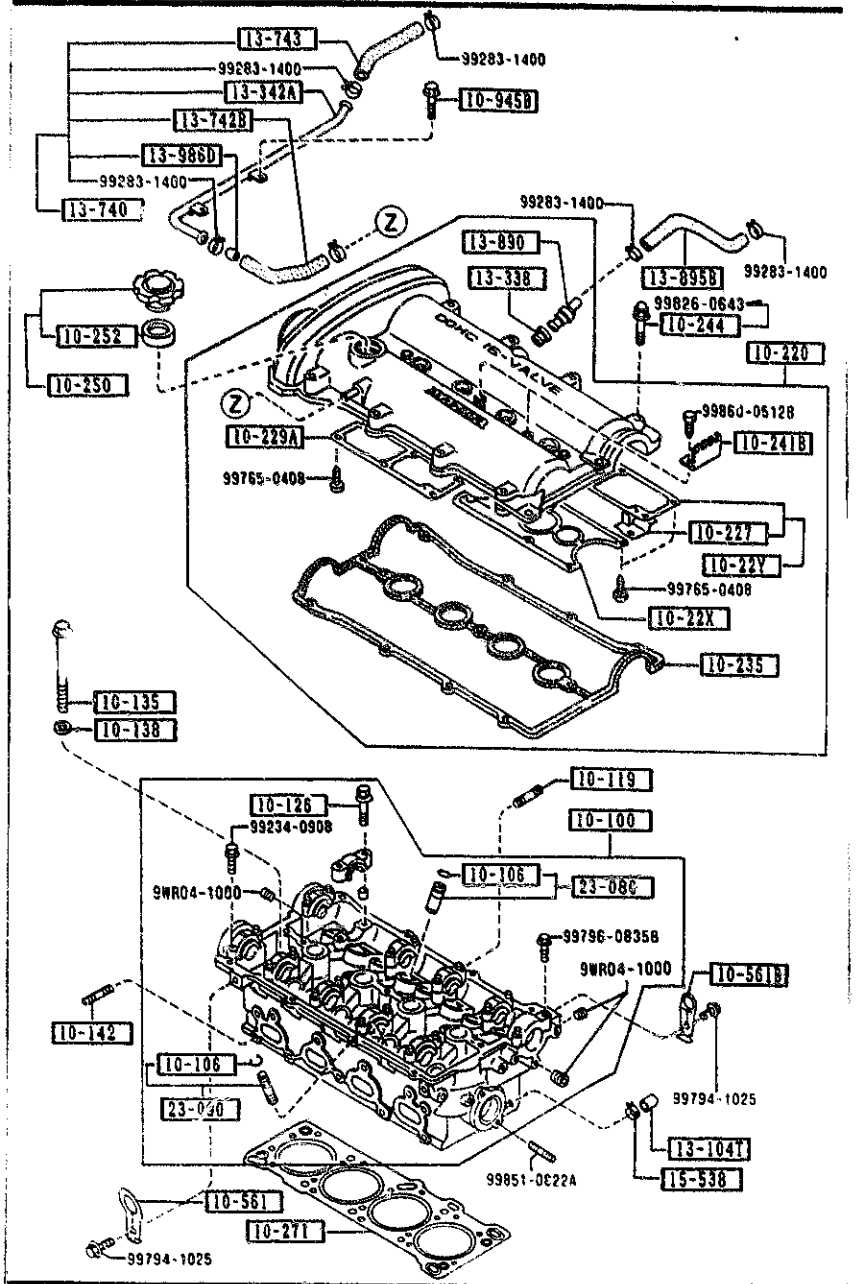

AUNA02

PART NO.	QTY	MODEL/RESTRICTION	MODEL/RESTRICTION	MODEL/RESTRICTION	FROM-TO
13-740		HOSE,VENT.-PURGE CONT. V.			
B61P-13-740A	1				
13-742B		HOSE,VENTILATION			
B61P-13-742A	1				
13-743		HOSE,VENTILATION			
B61P-13-743A	1				
13-890		VALVE,P.C.V.			
BP05-13-890	1				
13-895B		HOSE,P.C.V.			
B61P-13-741	1				
13-986D		ORIFICE			
B61P-13-986	1				
15-538		CLAMP,WATER HOSE			
JF02-15-538	1				
23-080		GUIDE,VALVE			
B6Z0-10-280	8				
23-090		GUIDE,VALVE			
B6Z0-10-290	8				

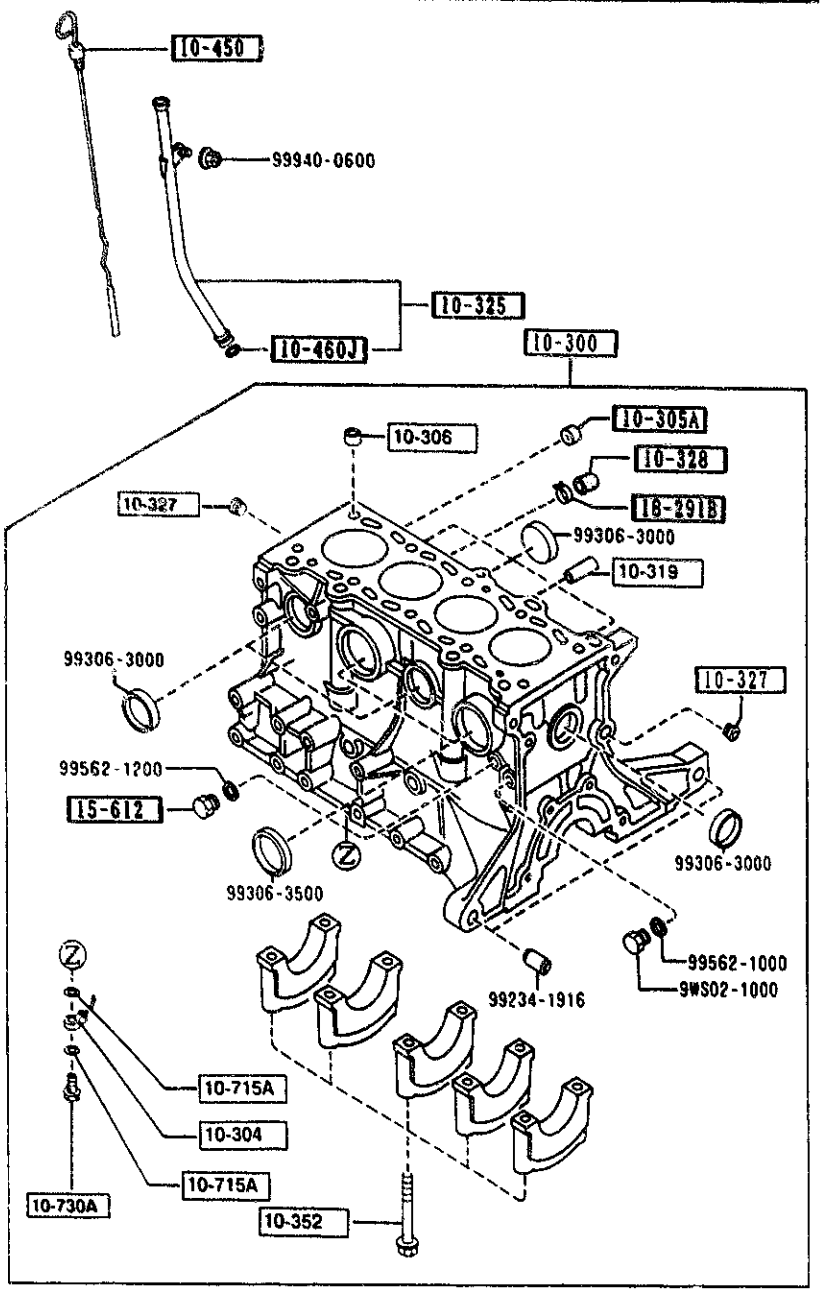

PART NO.	QTY	MODEL/RESTRICTION	MODEL/RESTRICTION	MODEL/RESTRICTION	FROM 10
10-300 B64J-10-300	1	BLOCK,CYLINDER			
10-304 B660-10-580A	4	JET,OIL			
10-305A B366-10-305	1	PLUG			
10-306 B630-10-306	2	PIN,TUBULAR			
10-319 B630-10-319	1	JOINT			
10-325 B61P-10-440	1	PIPE,OIL LEVEL GAUGE			
10-327 0221-10-327	2	PLUG,BLIND			
10-328 B660-10-328	1	COVER,BLIND-CYL. BLOCK			
10-352 B630-10-352	10	BOLT,BEARING CAP			
10-450 B61P-10-450C	1	GAUGE,OIL LEVEL			
10-460J 99541-00907	1	RING,'O'			
10-715A SE01-10-715	8	GASKET,OIL JET			
10-730A SE01-10-730	4	VALVE,OIL JET			
15-612 SE01-15-612	1	PLUG			

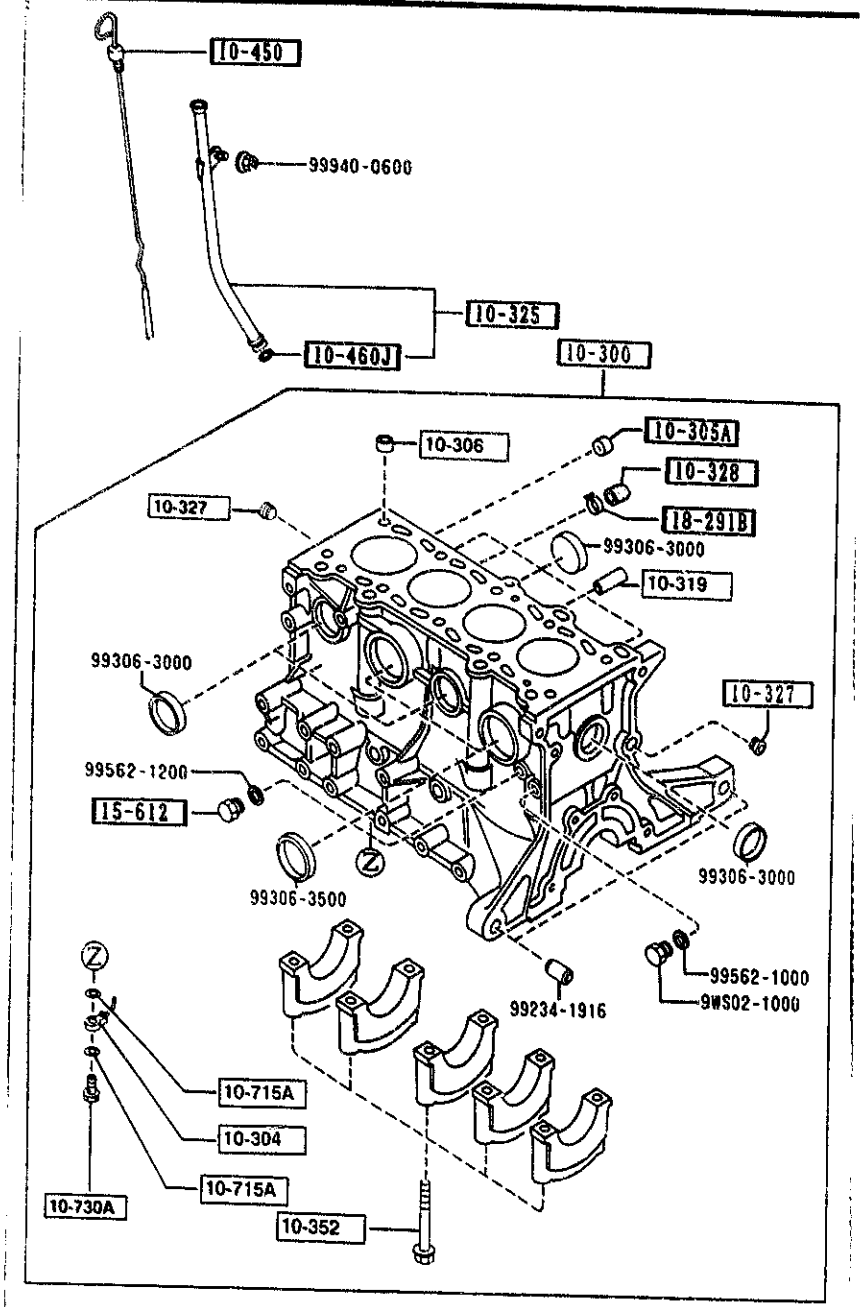

AUNA02

PART NO.	QTY	MODEL/RESTRICTION	MODEL/RESTRICTION	MODEL/RESTRICTION	FROM TO
18-2918		CLAMP, HOSE			
R230-15-538	1				

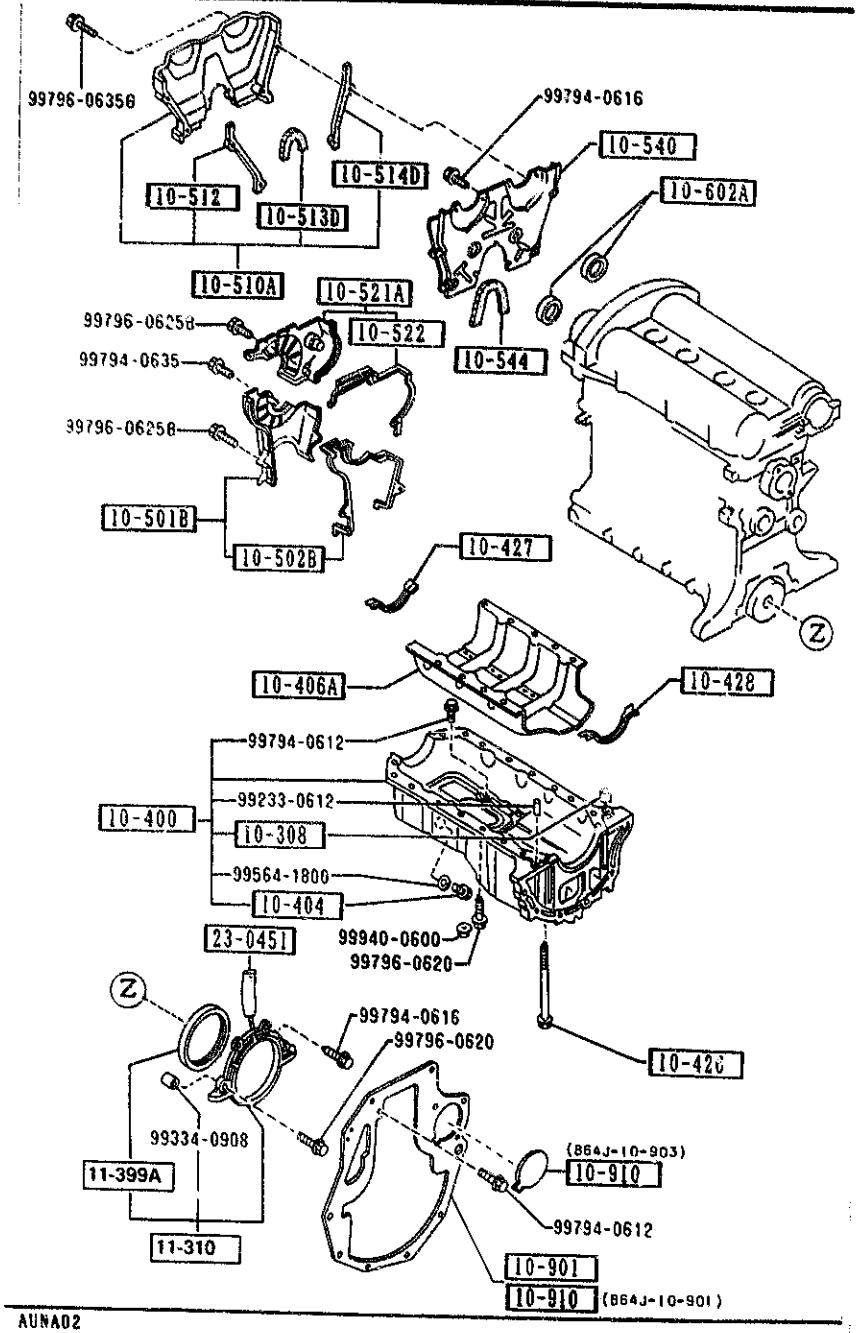

AUNA02

PART NO.	QTY	MODEL/RESTRICTION	MODEL/RESTRICTION	MODEL/RESTRICTION	FROM-TO
10-308		PIN,TUBULAR			
B6F4-10-308	1				
10-400		PAN,OIL			
B6Y0-10-400C	1				
10-404		PLUG,DRAIN			
B6S7-10-404A	1				
10-406A		PLATE,OIL BAFFLE-CYL. BLK			
B61P-10-40YA	1				
10-426		BOLT			
B6S7-10-465	2				
10-427		GASKET,OIL PAN			
B6F4-10-427	1				
10-428		GASKET,OIL PAN			
B6F4-10-428	1				
10-501B		COVER,TIMING BELT-LWR			
B660-10-500E	1				
10-502B		GASKET,T.B.COVER LWR			
B660-10-502B	1	NON ASBESTOS			
10-510A		COVER(UP.),TIMING CHAIN			
B61P-10-510	1				
10-512		GASKET(L)			
B61P-10-512	1	NON ASBESTOS			
10-513D		GASKET(INN),TIMING BELT(L)			
B61P-10-513	1	NON ASBESTOS			
10-514D		GASKET(C),TIMING BELT(L)			
B61P-10-514	1	NON ASBESTOS			

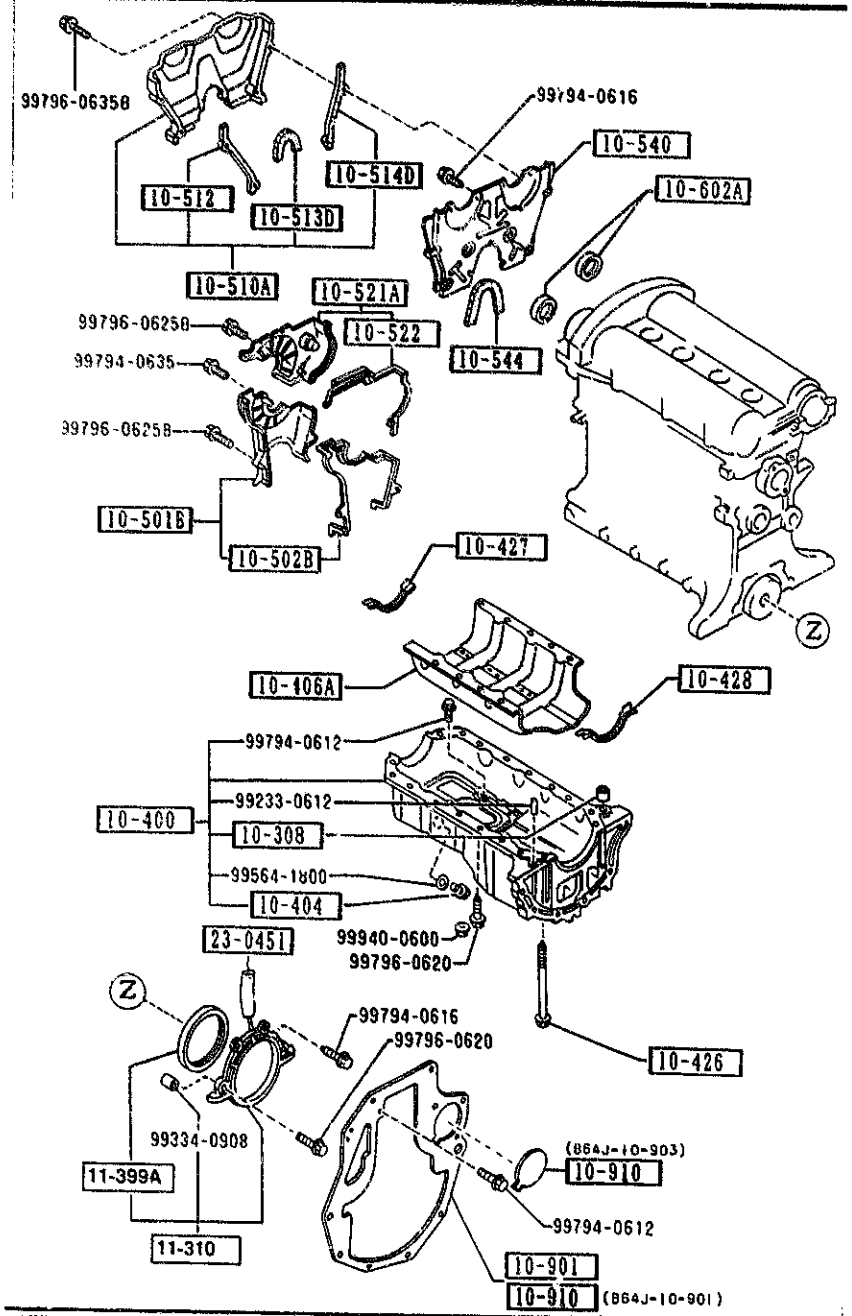

AUNA02

PART NO.	QTY	MODEL/RESTRICTION	MODEL/RESTRICTION	MODEL/RESTRICTION	FROM-TO
| 10-521A |		COVER,TIMING BELT-C.			
B660-10-520B	1				
| 10-522 |		GASKET,T.BELT COVER-C.			
B660-10-522	1	NON ASBESTOS			
| 10-540 |		PLATE,SEAL-T.BELT COVER U			
B61P-10-540B AN(B61P-10-540C)	1				-1701
B61P-10-540C	1				1701-
| 10-544 |		RUBBER,SEAL-SEAL PLATE			
B61P-10-544	1				
| 10-602A |		SEAL,OIL			
F801-10-602 A (F285-10-602)	2				-0B19
F285-10-602	2				0B19-
| 10-901 |		PLATE,END			
B61P-10-901A	1	(MT)			
| 10-910 |		COVER,END PLATE			
B64J-10-901	1	(AT)			
B64J-10-903	1	(AT)			
| 11-310 |		COVER,REAR			
B366-11-310B AN(B366-11-310C)	1				-0B26
B366-11-310C	1				0B26-
| 11-399A |		SEAL,OIL-CRANKSHAFT			
B630-11-312 A (BP05-11-312)	1				-0B26
BP05-11-312	1				0B26-
| 23-0451 |		TUBE,SILICON			
8527-77-739	1				

0B19 NA35※※-219322
0B26 NA35※※-220046
1701 NA35※※-235561

CAT. AUNA02-07

1993-12

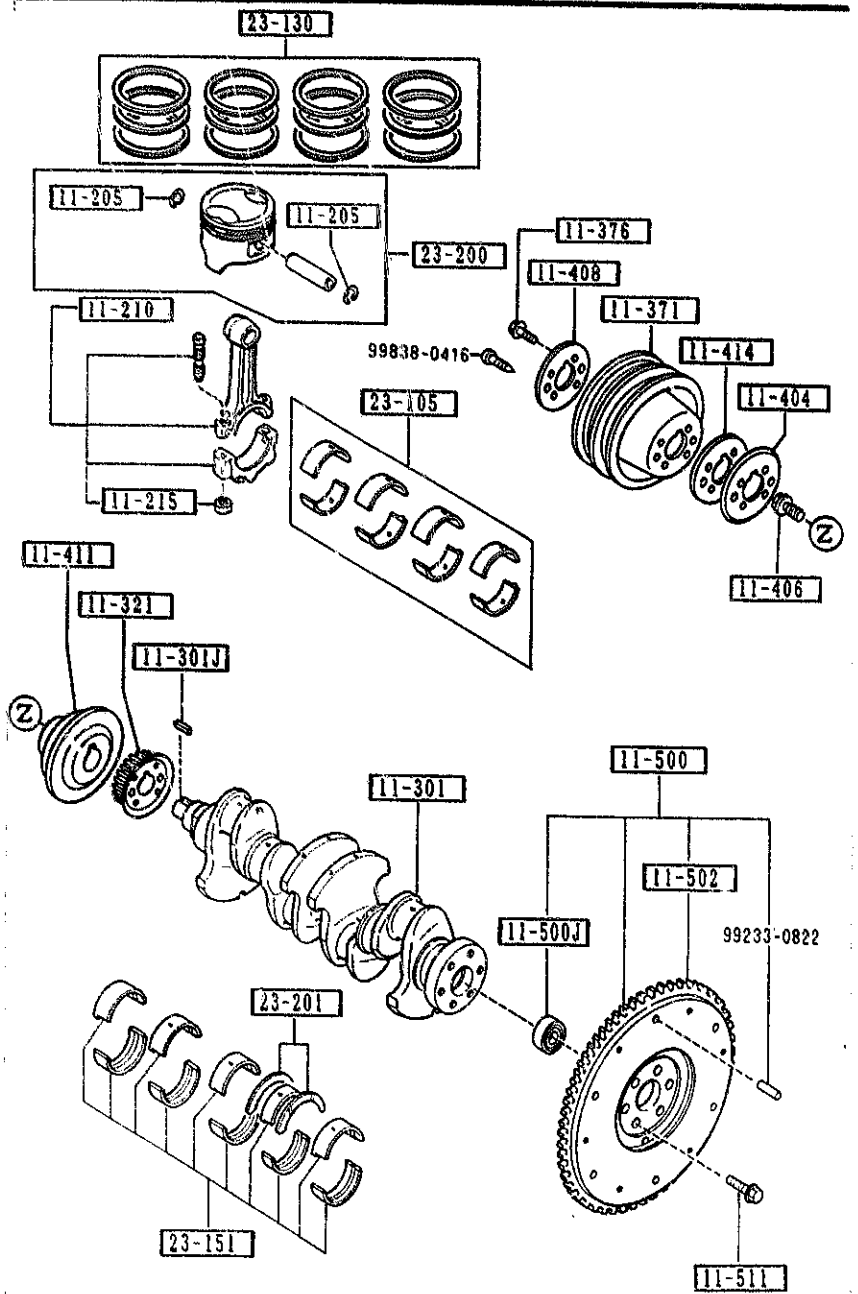

AUNA02

PART NO.	QTY	MODEL/RESTRICTION	MODEL/RESTRICTION	MODEL/RESTRICTION	FROM-TO
11-205		CLIP			
0221-11-205	8				
11-210		ROD,CONNECTING			
B6S7-11-210D	4				
11-215		NUT,CONNECTING ROD			
B6S7-11-215A	8				
11-301		CRANKSHAFT			
B616-11-300B	1				-0910
B6S7-11-300	1				0910-
11-301J		KEY,WOODRUFF-PULLEY			
B630-11-317A	1				-0910
B3C7-11-317	1				0910-
11-321		PULLEY,TIMING BELT			
B366-11-321A	1				-0910
B3C7-11-321	1				0910-
11-371		PULLEY,CRANKSHAFT			
B6S7-11-401A	1				-0910
B6S8-11-401	1				0910-
11-376		BOLT,PULLEY			
B631-11-405	4				-0910
B3C7-11-405	4				0910-0C01
JF01-11-405	4				0C01-
11-404		PLATE,TIMING BELT GUIDE			
B541-11-404 A (B541-11-404A)	1				-0901
B541-11-404A	1				0901-0910
11-406		BOLT,LOCK-C.SHAFT PULLEY			
B630-11-406C	1				-0910
B3C7-11-406	1				0910-

0901 NA35**-208969
0910 NA35**-209446
0C01 NA35**-220813

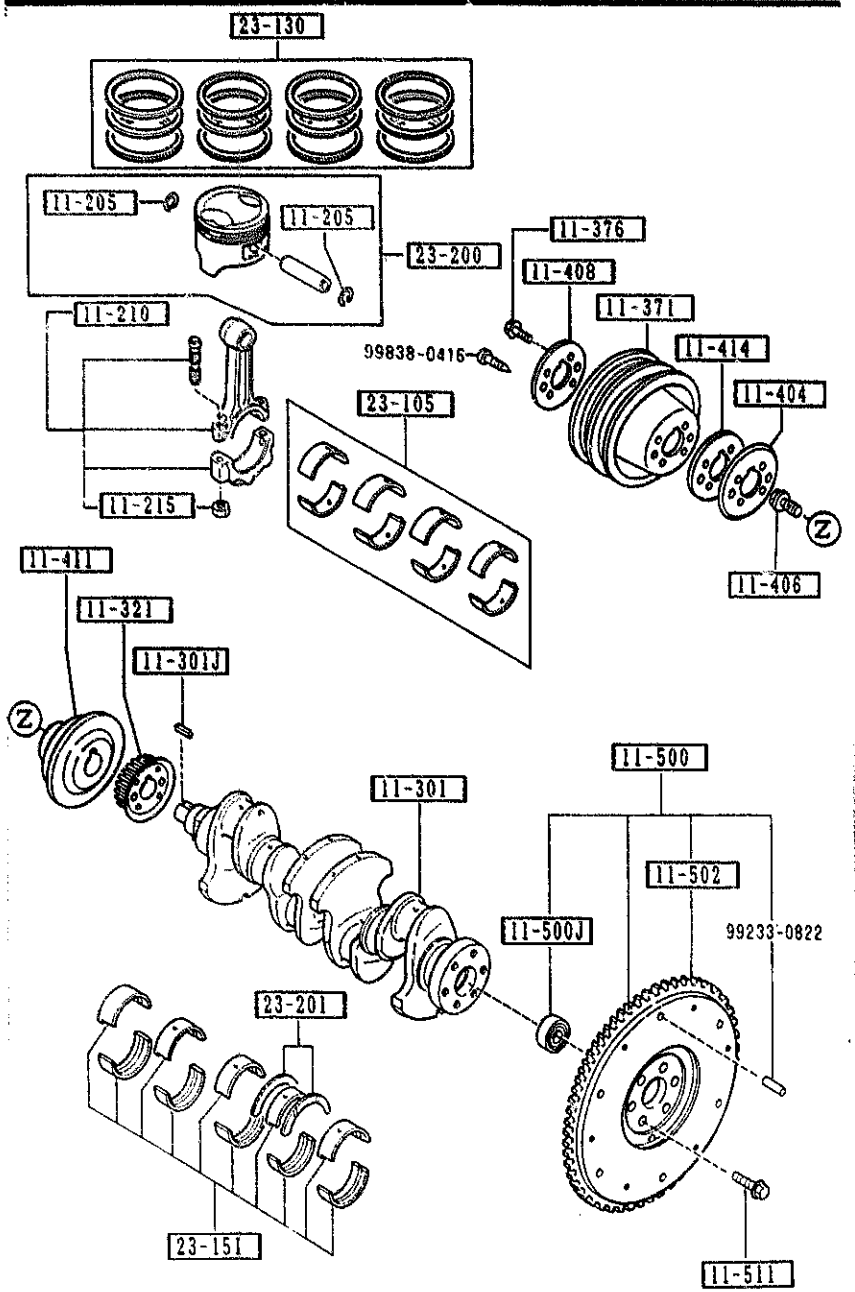

PART NO.	QTY	MODEL/RESTRICTION	MODEL/RESTRICTION	MODEL/RESTRICTION	FROM-TO
11-408		PLATE,CRANKSHAFT PULLEY			
B630-11-408B	1				-0910
B3C7-11-408	1				0910-
11-411		BOSS,PULLEY			
B3C7-11-400	1				0910-
11-414		PLATE(OUT),TIMING BELT			
B631-11-414	1				-0910
11-500		WHEEL,FLY			
B61P-11-500	1	(MT)			
11-500J		BEARING,BALL-FLY WHEEL			
F801-11-303	1	(MT)			
11-502		GEAR,RING-FLY WHEEL			
B367-11-502	1	(MT)			
11-511		BOLT,LOCK-FLYWHEEL			
F201-11-511	6	(MT)			
23-105		METAL SET,CONN.ROD			
B6Y1-11-SE0	1	STD.			
B6Y1-11-SFX	1	O.S. 0.50			
B6Y1-11-SFY	1	O.S. 0.75			
B6Y1-11-SF0	1	O.S. 0.25			
23-130		RING SET,PISTON			
B6Y3-11-SC0 A (B6Y3-11-SC0A)	1	STD.			-2101
B6Y4-11-SC0A A (B6Y4-11-SC0B)	1	STD.			-2101
B6Y3-11-SDX A (B6Y3-11-SDXA)	1	O.S. 0.50			-2101
B6Y4-11-SDXA A (B6Y4-11-SDXB)	1	O.S 0.50			-2101
B6Y3-11-SD0 A (B6Y3-11-SD0A)	1	O.S. 0.25			-2101

0910 NA35**-209446
2101 NA35**-313914

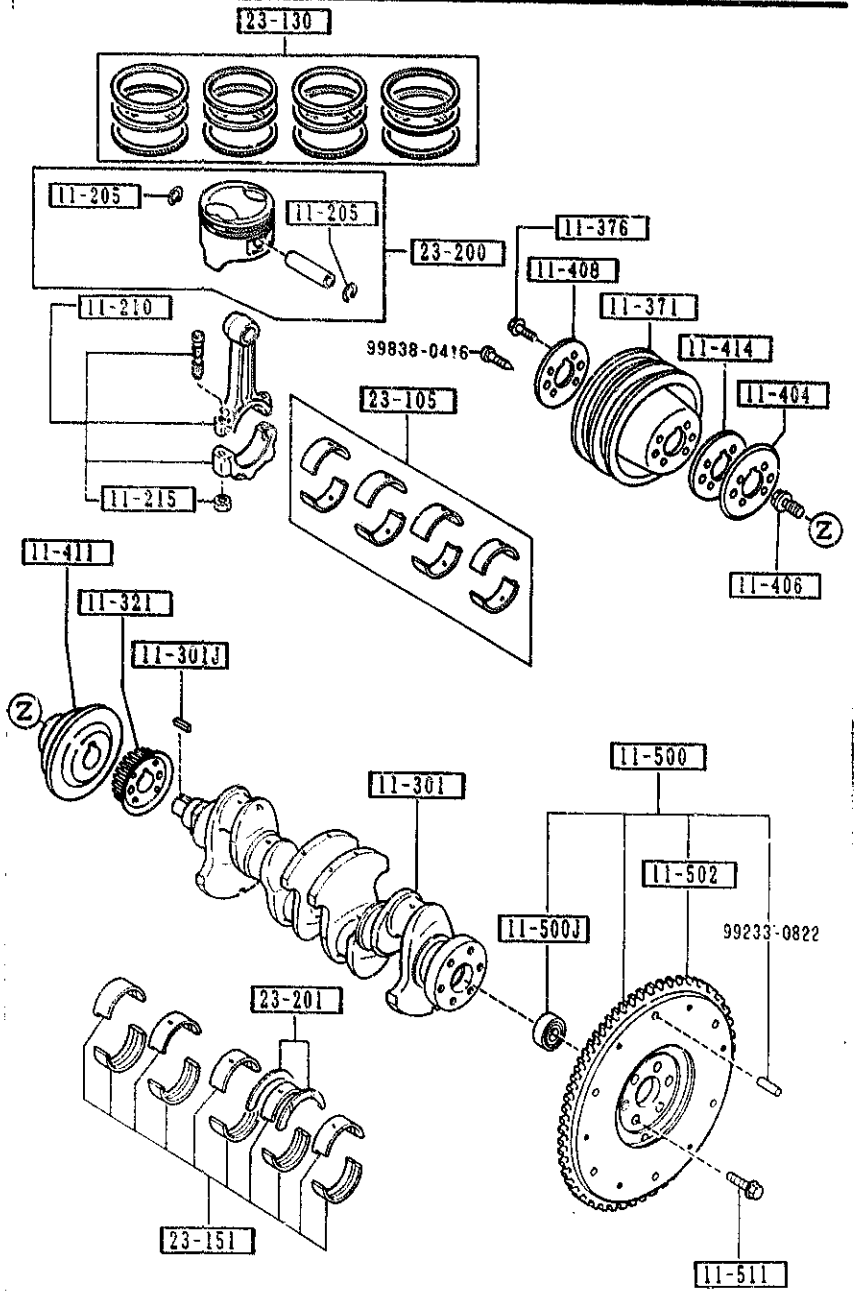

PART NO.	QTY	MODEL/RESTRICTION	MODEL/RESTRICTION	MODEL/RESTRICTION	FROM 10
CONT'D					
B6Y4-11-SD0A A (B6Y4-11-SD0B)	1	O.S 0.25			-2101
B6Y3-11-SC0A	1	STD. (AT)			2101-
B6Y4-11-SC0B	1	STD. (MT)			2101-
B6Y3-11-SDXA	1	O.S. 0.50 (AT)			2101-
B6Y4-11-SDXB	1	O.S. 0.50 (MT)			2101-
B6Y3-11-SD0A	1	O.S. 0.25 (AT)			2101-
B6Y4-11-SD0B	1	O.S. 0.25 (MT)			2101-
+----------+ | 23-151 | +----------+		METAL SET,MAIN BRG.			
B6Y2-11-SG0	1	STD.			
B6Y1-11-SHX	1	O.S. 0.50			
B6Y1-11-SH0	1	O.S. 0.25			
+----------+ | 23-200 | +----------+		PISTON SET			
B6Z2-11-SA0C	4	STD. (MT)			
B6Z5-11-SA0	4	STD. (AT)			
B6Z2-11-SBXC	4	O.S. 0.50 (MT)			
B6Z5-11-SBX	4	O.S. 0.50 (AT)			
B6Z2-11-SB0C	4	O.S. 0.25 (MT)			
B6Z5-11-SB0	4	O.S. 0.25 (AT)			
+----------+ | 23-201 | +----------+		METAL SET,THRUST			
B6Y1-11-SJ0	1	STD.			
B6Y1-11-SKX	1	O.S. 0.50			
B6Y1-11-SKY	1	O.S. 0.75			
B6Y1-11-SK0	1	O.S. 0.25			

2101 NA35**-313914

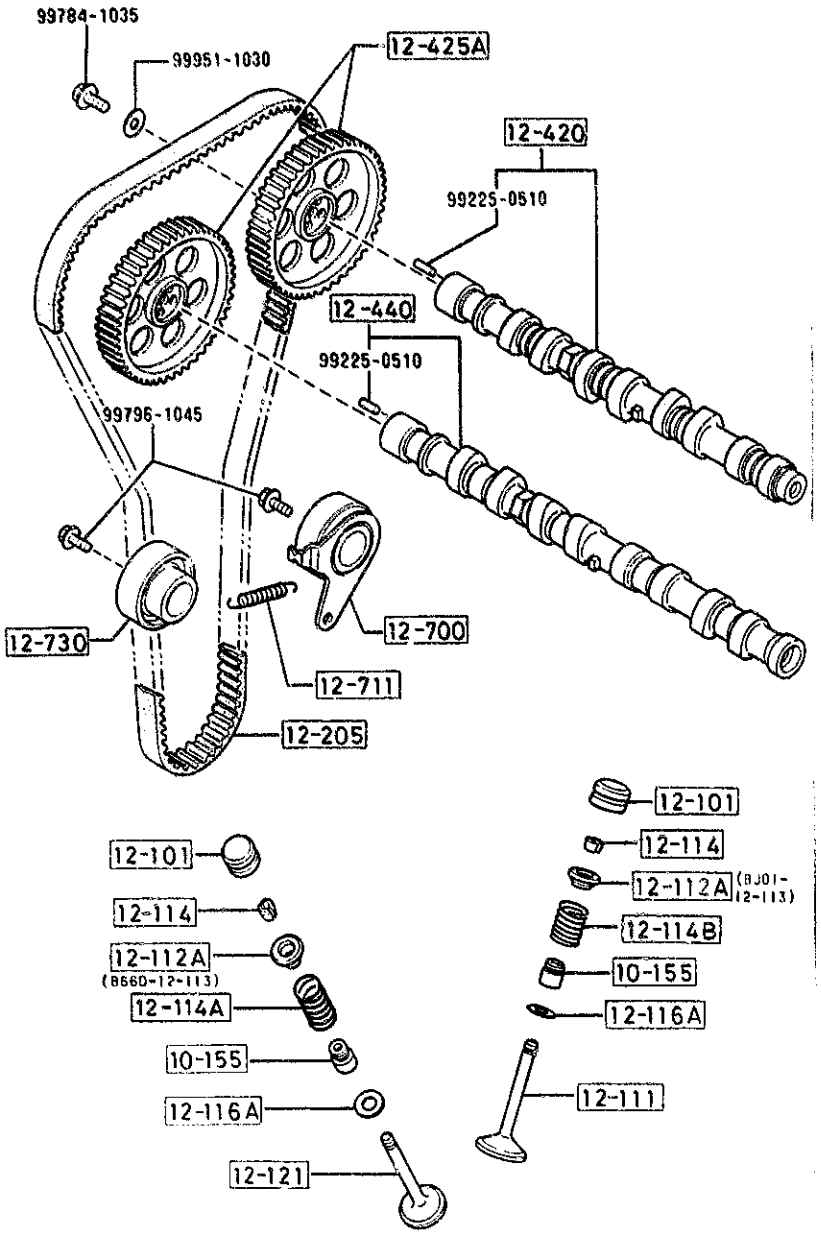

PART NO.	QTY	MODEL/RESTRICTION	MODEL/RESTRICTION	MODEL/RESTRICTION	FROM-TO
10-155		SEAL,VALVE			
B660-10-155	16	NOK			
12-101		ADJUSTER,HYDRAULIC L ASH			
B660-12-101	16	NITTAN VALVE			
12-111		VALVE,INLET			
B6S7-12-111	8				
12-112A		SEAT,VALVE SPG-UP.			
BJ01-12-113	8				
B660-12-113	8				
12-114		COTTER,VALVE			
B660-12-114	32				
12-114A		SPRING,OUT.-VALVE			
B61P-12-125	8				
12-114B		SPRING,VALVE			
BJ01-12-125	8				
12-116A		SEAT,VALVE SPG.-LWR			
B660-12-123 AN(B660-12-123A)	16				-1301
B660-12-123A	16				1301-
12-121		VALVE,EXHAUST			
B660-12-121	8				
12-205		BELT,TIMING			
B6S7-12-205A	1				
12-420		CAMSHAFT			
B64J-12-420	1	(AT)			
B660-12-420C	1	(MT)			
12-425A		PULLEY,CAMSHAFT			
B6S7-12-425A	2				

1301 NA35**-231464

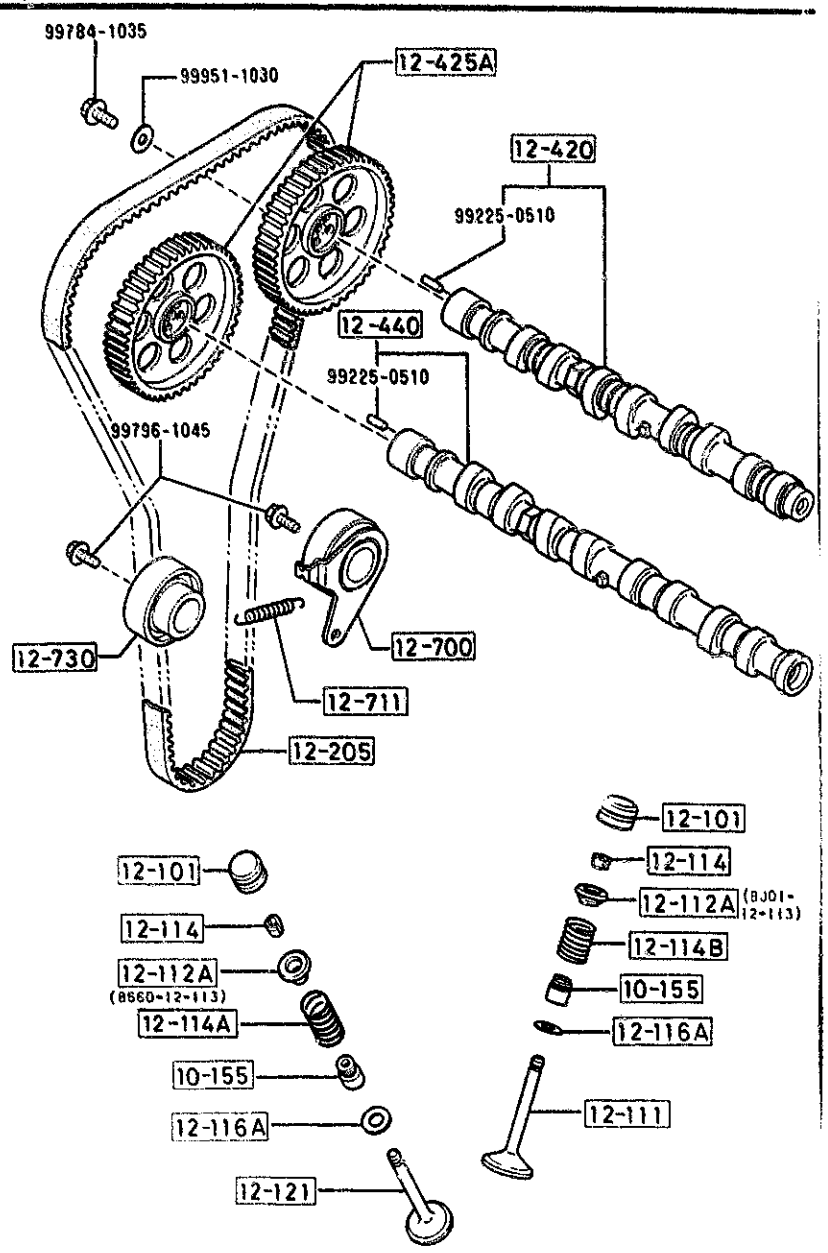

PART NO.	QTY	MODEL/RESTRICTION	MODEL/RESTRICTION	MODEL/RESTRICTION	FROM-TO
12-440		CAMSHAFT,EXHAUST			
B6A7-12-440A	1	(AT)			
B61P-12-440	1	(MT)			
12-700		TENSIONER,T.BELT			
B660-12-700C AN(B660-12-700D)	1				-1121
B660-12-700D	1				1121-
12-711		SPRING,TENSIONER			
B660-12-711C	1				
12-730		IDLER,TIMING BELT			
B660-12-730B AN(B660-12-730C)	1				-1101
B660-12-730C	1				1101-

1101 NA35✱✱-223636
1121 NA35✱✱-226079

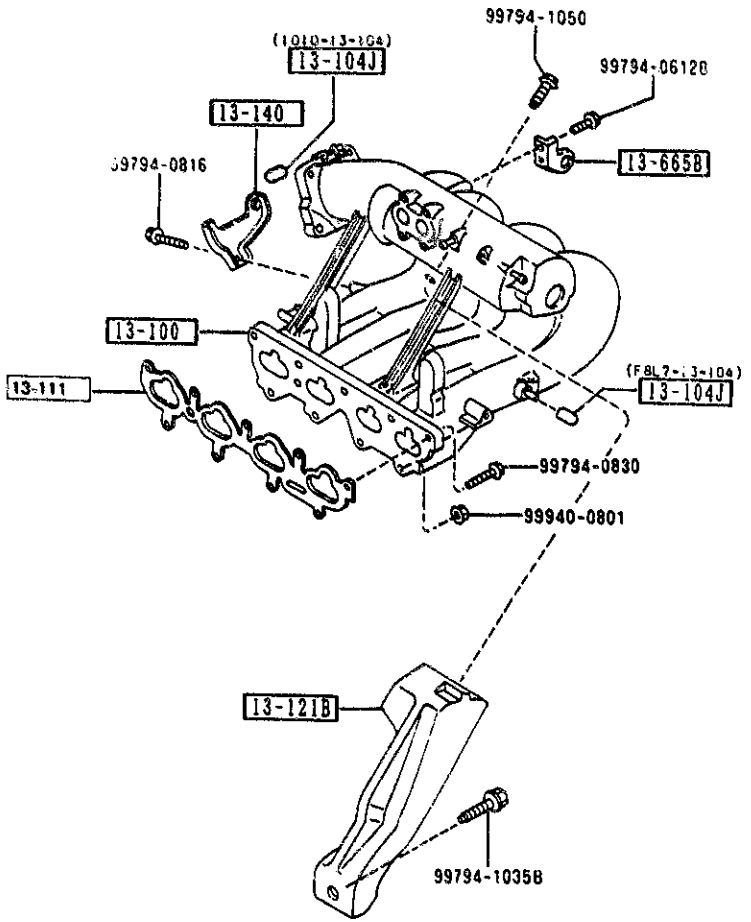

1300 -1 * INLET MANIFOLD

PART NO.	QTY	MODEL/RESTRICTION	MODEL/RESTRICTION	MODEL/RESTRICTION	FROM TO
13-100		MANIFOLD,INLET			
B61P-13-100D	1				
13-104J		CAP,BLIND			
F8L7-13-104	1				
1010-13-104	1				
13-111		GASKET,IN.MANIFOLD			
B61P-13-111	1	NON ASBESTOS			
13-121B		STAY,MANIFOLD			
B61P-13-121	1				
13-140		BRKT,SURGE TANK			
B61P-13-140	1				
13-665B		BRACKET,ACCEL WIRE			
B61P-13-665	1				

1310 EXHAUST MANIFOLD

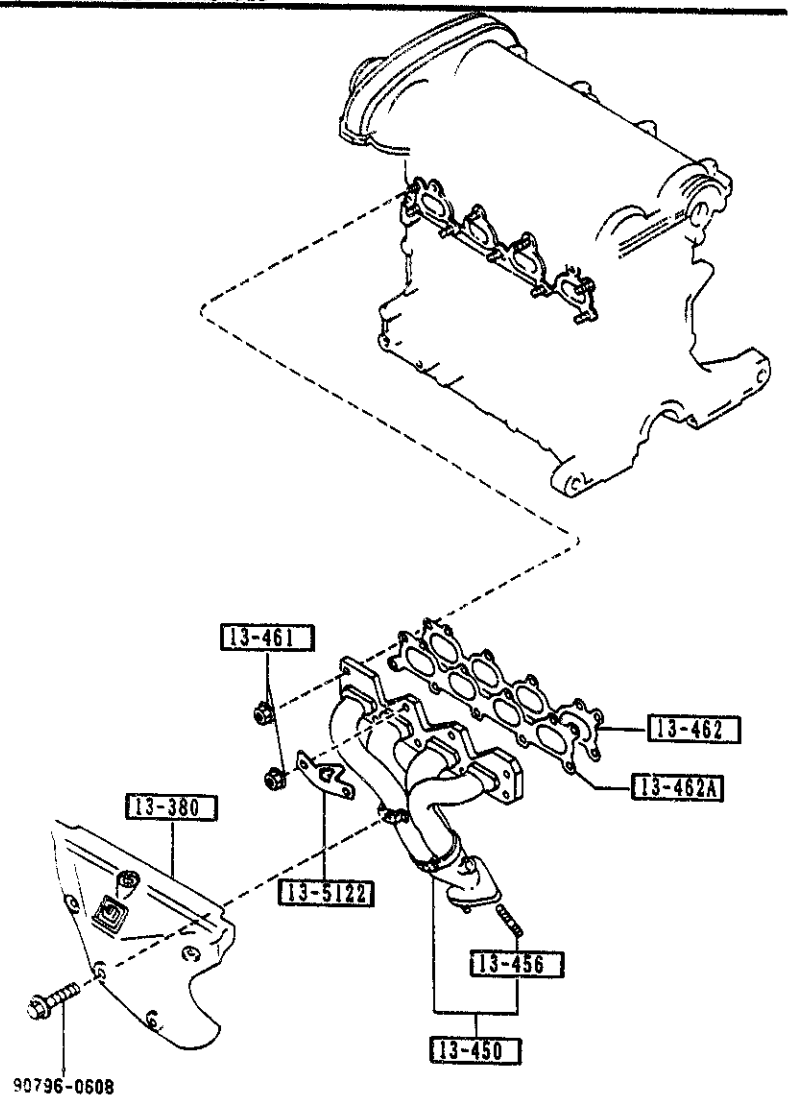

PART NO.	QTY	MODEL/RESTRICTION	MODEL/RESTRICTION	MODEL/RESTRICTION	FROM-TO
13-380		INSULATOR,HEAT			
B61P-13-380B	1				-0821
A (B61P-13-380C)					
B61P-13-380C	1				0821-
13-450		MANIFOLD,EXHAUST			
B61P-13-450A	1				-0821
A (B61P-13-450B)					
B61P-13-450B	1				0821-
13-456		STUD			
2306-13-456	3				
13-461		NUT,EX.MANIFOLD			
04S7-13-465	9				
13-462		GASKET,EX.MANIFOLD			
B695-13-460A	1	NON ASBESTOS			
13-462A		GASKET,EX.MANIFOLD			
B695-13-462	1				
13-5122		BRACKET,EX.MANIFOLD			
B61P-13-468	1				

0821 NA35**-206810

1320 FUEL SYSTEM

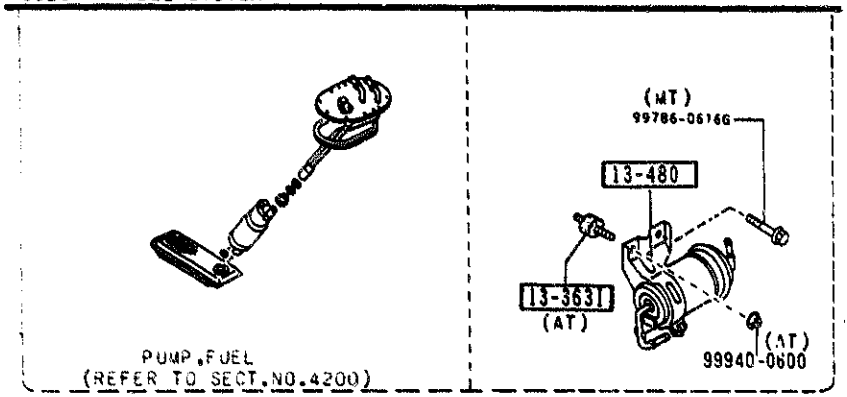

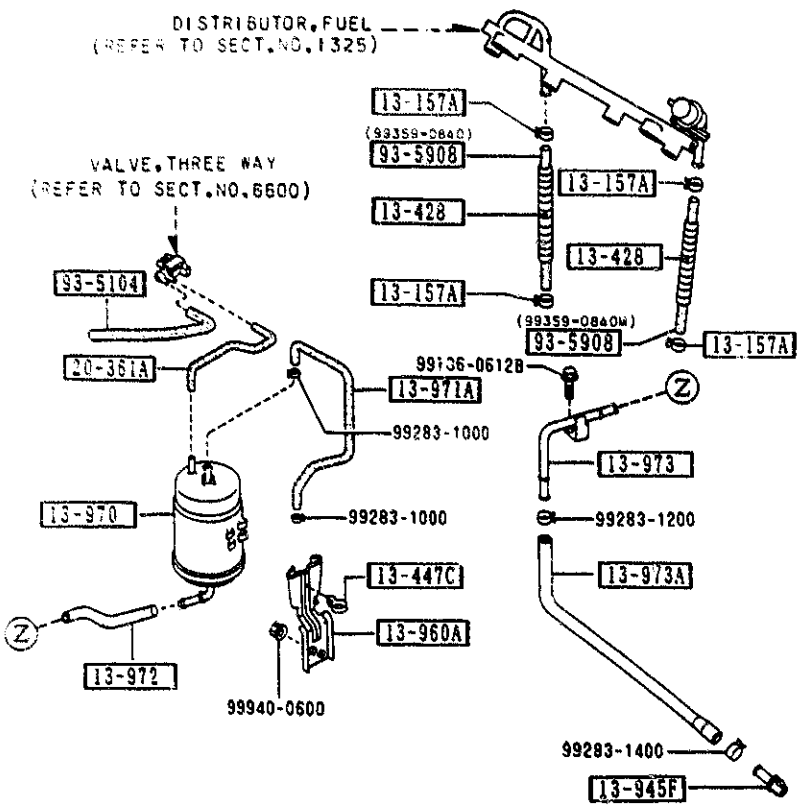

PART NO.	QTY	MODEL/RESTRICTION	MODEL/RESTRICTION	MODEL/RESTRICTION	FROM TO
13-157A 8574-13-157	4	CLIP			
13-363I N326-13-363B	2	RUBBER,INSULATION (AT)			
13-428 B61P-13-428	2	PROTECTOR			
13-447C B61P-13-447	1	CLAMP,HOSE			
13-480 B61P-20-490	1	FILTER,FUEL			
13-945F JE16-13-298	1	CONNECTOR			
13-960A B61P-13-960	1	BRACKET,CANISTER			
13-970 B61P-13-970	1	CANISTER			
13-971A B61P-13-971	1	HOSE,VACUUM			
13-972 B61P-13-972A	1	HOSE,EVAPORATION			
13-973 B61P-13-97YA	1	HOSE,DRAIN			
13-973A B61P-13-973A	1	HOSE,EVAPORATION			
20-361A B61P-20-361	1	TUBE,VACUUM			
93-5104 99351-04999	1	HOSE			

1320 FUEL SYSTEM

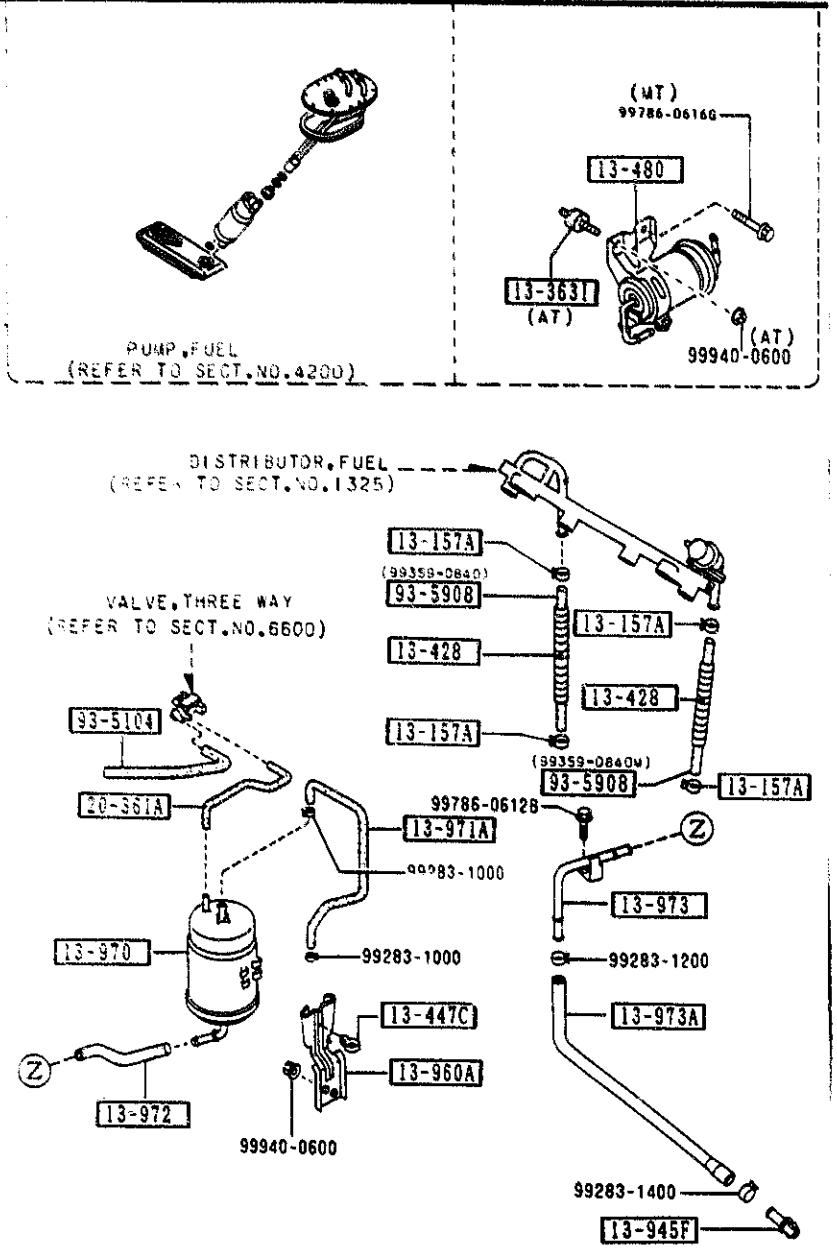

PART NO.	QTY	MODEL/RESTRICTION	MODEL/RESTRICTION	MODEL/RESTRICTION	FROM-TO
93-5908		HOSE			
99359-0840	1				
99359-0840M	1				

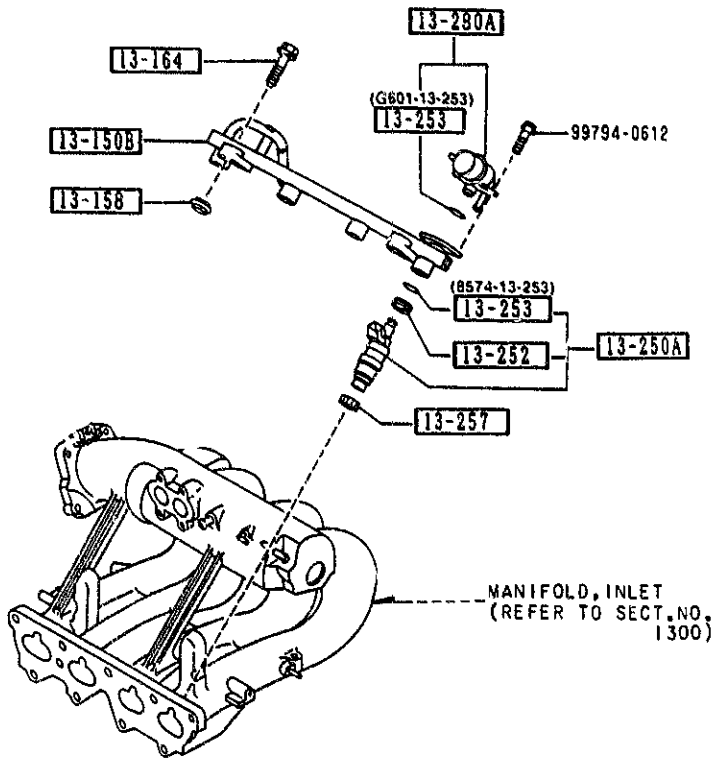

1325 -1 # FUEL DISTRIBUTOR

PART NO.	QTY	MODEL/RESTRICTION	MODEL/RESTRICTION	MODEL/RESTRICTION	FROM-TO
13-150B		DISTRIBUTOR,FUEL			
B61P-13-150	1				
13-158		INSULATOR,FUEL DIST.			
B675-13-158	2				
13-164		BOLT,FUEL DISTRIBUTOR			
F883-13-164	2				
13-250A		INJECTION,FUEL-M.P.ELECT.			
B6S7-13-250	4				
13-252		GROMMET			
8574-13-252	4				
13-253		RING,'O'			
G601-13-253	1				
3574-13-253	4				
13-257		INSULATOR,INJECTION			
JE06-13-257	4				
13-280A		PRESSURE RG.,FUEL			
B61P-13-280	1				

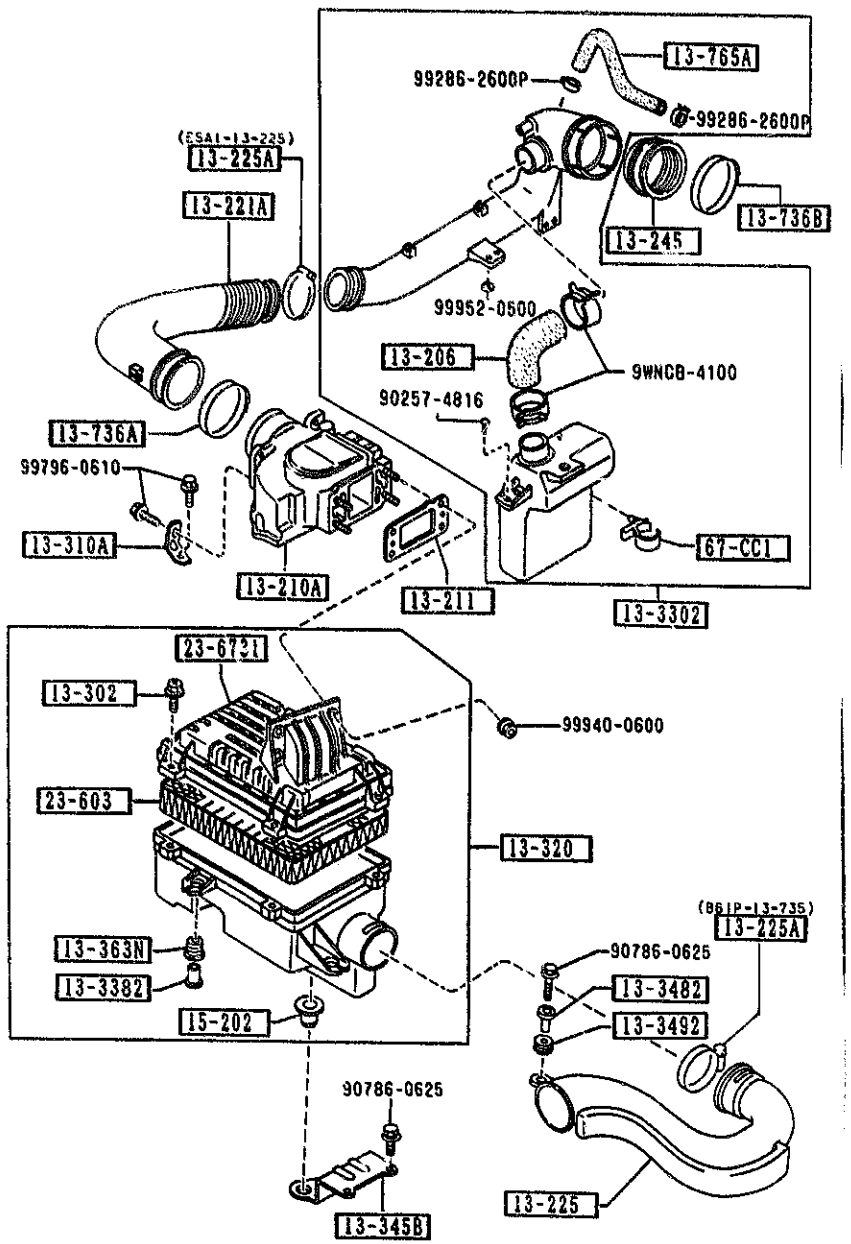

PART NO.	QTY	MODEL/RESTRICTION	MODEL/RESTRICTION	MODEL/RESTRICTION	FROM-TO
13-206		HOSE,AIR			
B61P-13-206A	1				
13-210A		SENSOR,AIR FLOW			
B6S7-13-210A	1				
13-211		GASKET			
B6S7-13-211A	1	NON ASBESTOS			
13-221A		HOSE,AIR			
B61P-13-221B	1				
13-225		DUCT,FRESH AIR			
B61P-13-200B	1				-1801
A (B61P-13-200C)					
B61P-13-200C	1				1801-
13-225A		CLAMP,HOSE			
E5A1-13-225	1				
B61P-13-735	1				
13-245		JOINT,RUBBER			
B61P-13-245	1				
13-302		BOLT,AIR CLEANER			
F201-13-302A	5				
13-310A		BRKT,AIR FLOW METER			
B61P-13-311B	1				
13-320		HOUSING,AIR CLEANER			
B61P-13-320A	1				
13-3302		TUBE,AIR INTAKE			
B61P-13-330E	1	(MT)			
B64J-13-330	1	(AT)			
13-3382		SPACER			
FE51-13-329	3				

1801 NA35**-235561

1330 AIR CLEANER

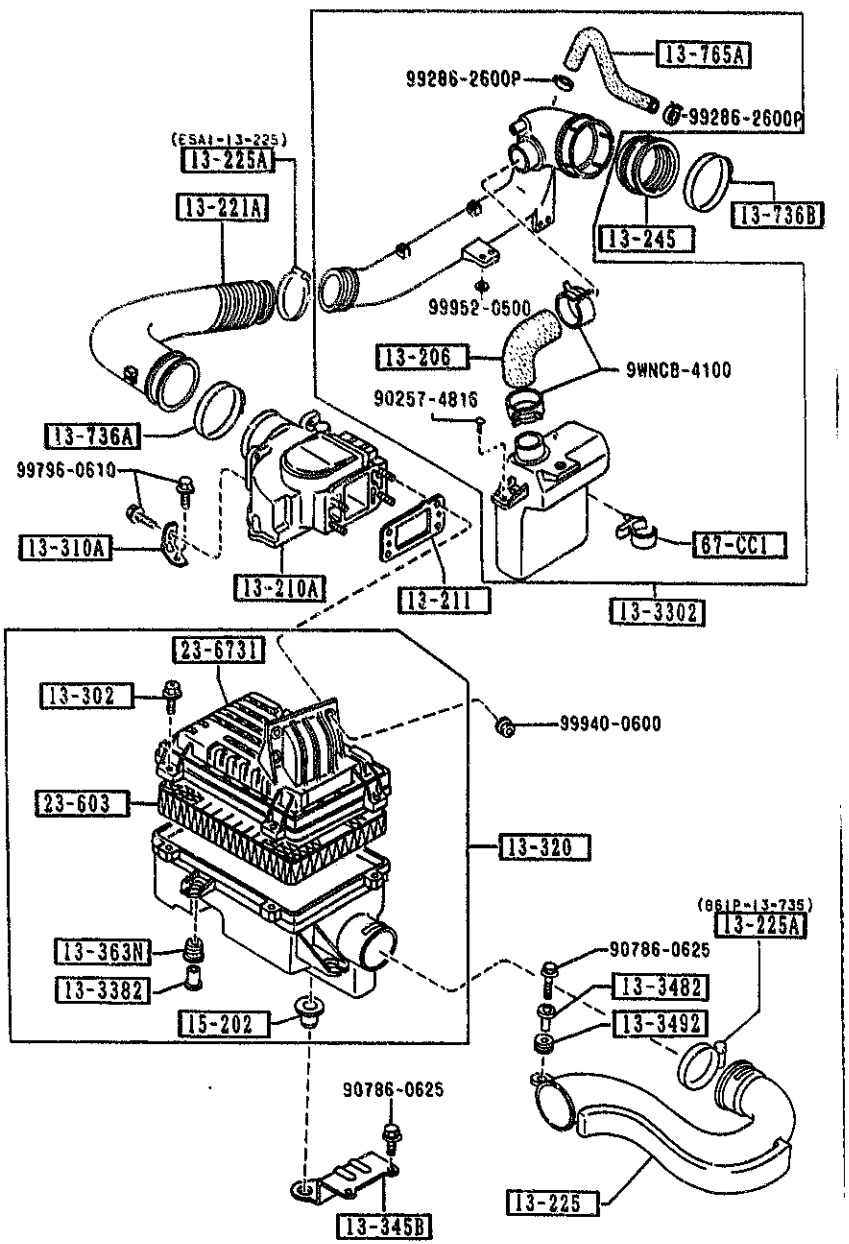

PART NO.	QTY	MODEL/RESTRICTION	MODEL/RESTRICTION	MODEL/RESTRICTION	FROM-TO
13-345B B61P-20-211	1	BRACKET,AIR CLEANER			
13-3482 SLA1-13-321	1	SPACER,AIR INT.PIPE			
13-3492 S501-13-349	1	INSULATOR			
13-363N FE51-13-363	3	RUBBER,MOUNTING			
13-736A B630-13-736	1	CLAMP,HOSE-A.I.P./A. CLNR			
13-736B F249-13-736	1	CLAMP,HOSE			
13-765A B61R-13-765	1	HOSE,AIR			
15-202 E501-15-202	1	RUBBER,MOUNT DENSO			-2501
B61P-13-Z66	1				2501-
23-603 B6S7-13-Z40	1	ELEMENT,AIR CLEANER			
23-6731 B61P-13-Z01	1	COVER,AIR CLEANER			
67-CC1 NA02-67-CH1	1	CLIP,HARNESS			

2501 NA35✱✱-326361

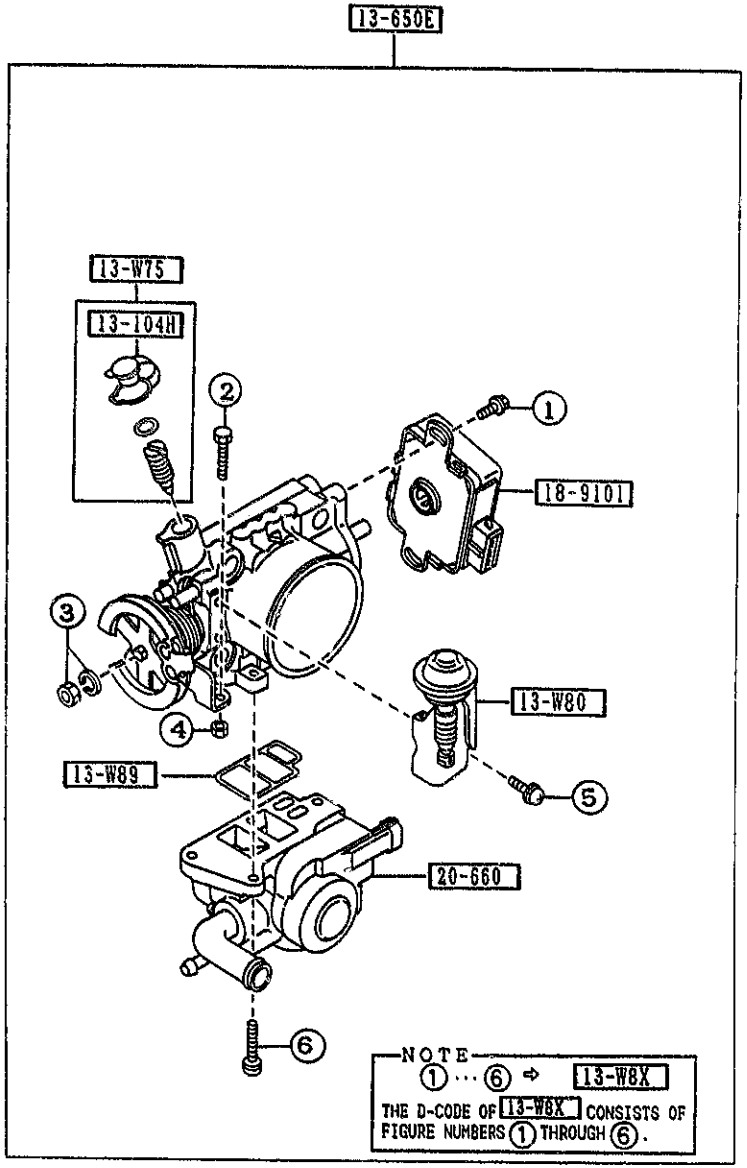

PART NO.	QTY	MODEL/RESTRICTION	MODEL/RESTRICTION	MODEL/RESTRICTION	FROM-TO
13-W75		SCREW SET,IDLE ADJUST-TH.			
B551-13-W75A	1				
13-W8X		SCREW & WASHER SET			
B551-13-W8X	1				
13-W80		BRKT SET,DASH POT-THROT			
B61P-13-W80	1				
13-W89		GASKET,THERMO			
B551-13-W89	1				
13-104H		CAP,BLIND			
B551-13-104	1				-1C01
13-650E		BODY,THROTTLE			
B61P-13-640B	1	(MT)			
B64J-13-640	1	(AT)			
18-9101		SENSOR,THROTTLE POSITION			
B6S8-18-911	1	(AT)			
B630-18-911	1	(MT)			
20-660		VALVE,IDLE AIR CONTROL			
B61P-20-660	1				

1C01 NA35✱✱-309801

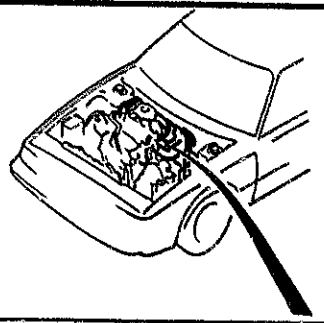

93-5104	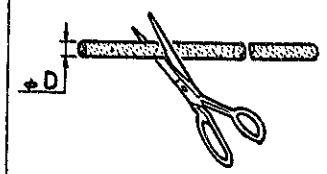	99351-04999	D=4MM

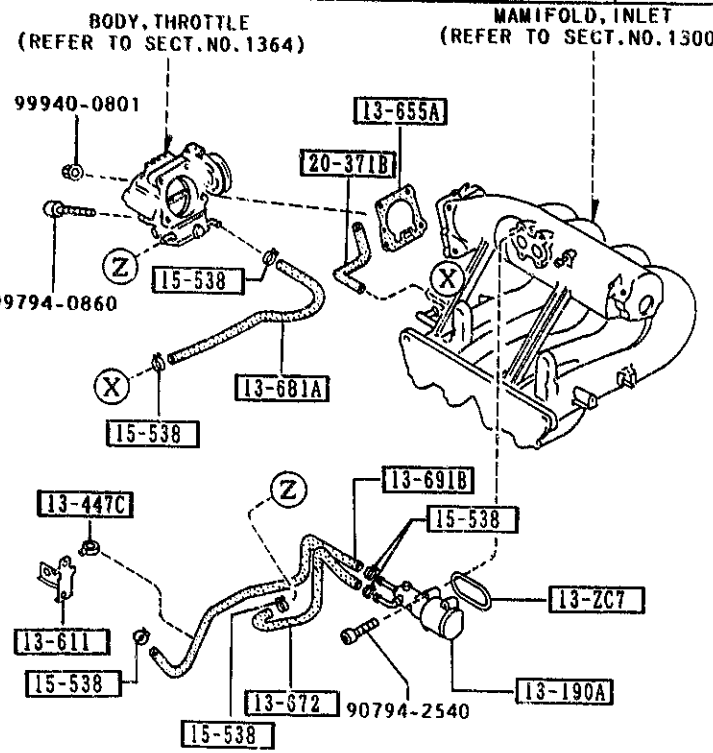

AUNA02

PART NO.	QTY	MODEL/RESTRICTION	MODEL/RESTRICTION	MODEL/RESTRICTION	FROM-TO
13-ZC7		RING,'O'-AIR VALVE			
B6S7-13-ZC7	1				
13-190A		VALVE,AIR			
B61P-13-190A	1	(MT)			
B64J-13-190	1	(AT)			
13-447C		CLAMP,HOSE			
B61P-13-447	1				
13-611		BRACKET			
B61P-13-685A	1				
13-655A		GASKET			
B6S7-13-655	1	NON ASBESTOS			
13-672		HOSE,WATER			
B61P-13-682A	1				
13-681A		HOSE,WATER			
B61P-13-681B	1				
13-691B		HOSE,WATER			
B61P-13-691A	1				
15-538		CLAMP,WATER HOSE			
JF02-15-538	6				
20-371B		TUBE,VACUUM			
B61P-20-371	1				
93-5104		HOSE			
99351-04999	1				

CAT. AUNA02-07

1993-12

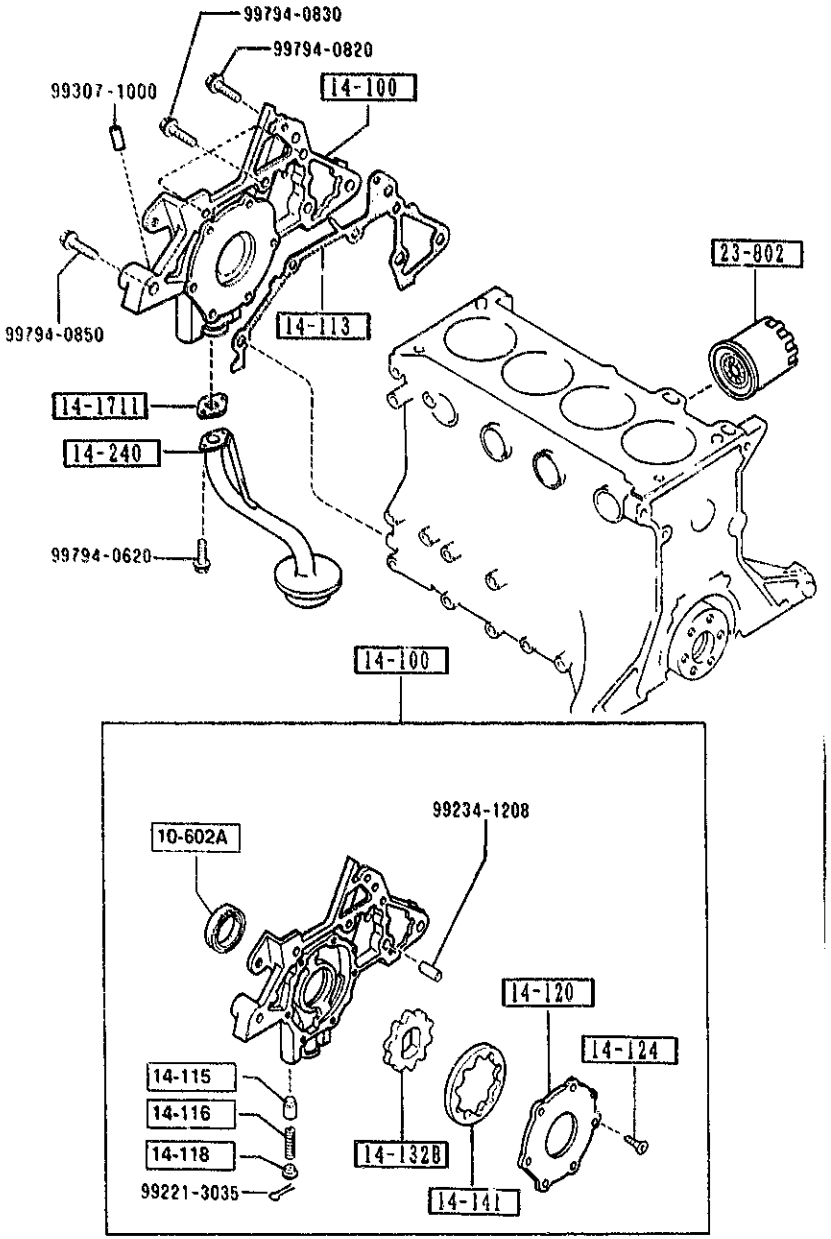

PART NO.	QTY	MODEL/RESTRICTION	MODEL/RESTRICTION	MODEL/RESTRICTION	FROM-TO
10-602A		SEAL,OIL			
B630-10-602	1				-0910
B3C7-10-602 AN(B3C7-10-602A)	1	NON ASBESTOS			0910-0B01
B3C7-10-602A	1	NON ASBESTOS			0B01-
14-100		PUMP,OIL			
B660-14-100E	1				-0910
B6S8-14-100 AN(B6S8-14-100A)	1				0910-0B01
B6S8-14-100A A (B6S8-14-100B)	1				0B01-0B08
B6S8-14-100B A (B6S8-14-100C)	1				0B08-1B01
B6S8-14-100C	1				1B01-
14-113		GASKET,OIL PUMP			
B630-14-113	1	ASBESTOS			
14-115		PLUNGER,CONTROL			
0221-14-115	1				
14-116		SPRING,PRESSURE			
0324-14-116A	1				-1B01
BPC8-14-116	1				1B01-
14-118		SHEET,SPRING			
0222-14-118	1				
14-120		COVER,OIL PUMP			
B630-14-121	1				-0910
B3C7-14-121	1				0910-
14-124		SCREW,OIL PUMP COVER			
FE1H-14-124	7				
14-132B		GEAR,INNER			
B660-14-132	1				-0910
B6S7-14-132	1				0910-

0910 NA35**-209446
0B01 NA35**-217311
0B08 NA35**-218223
1B01 NA35**-306993

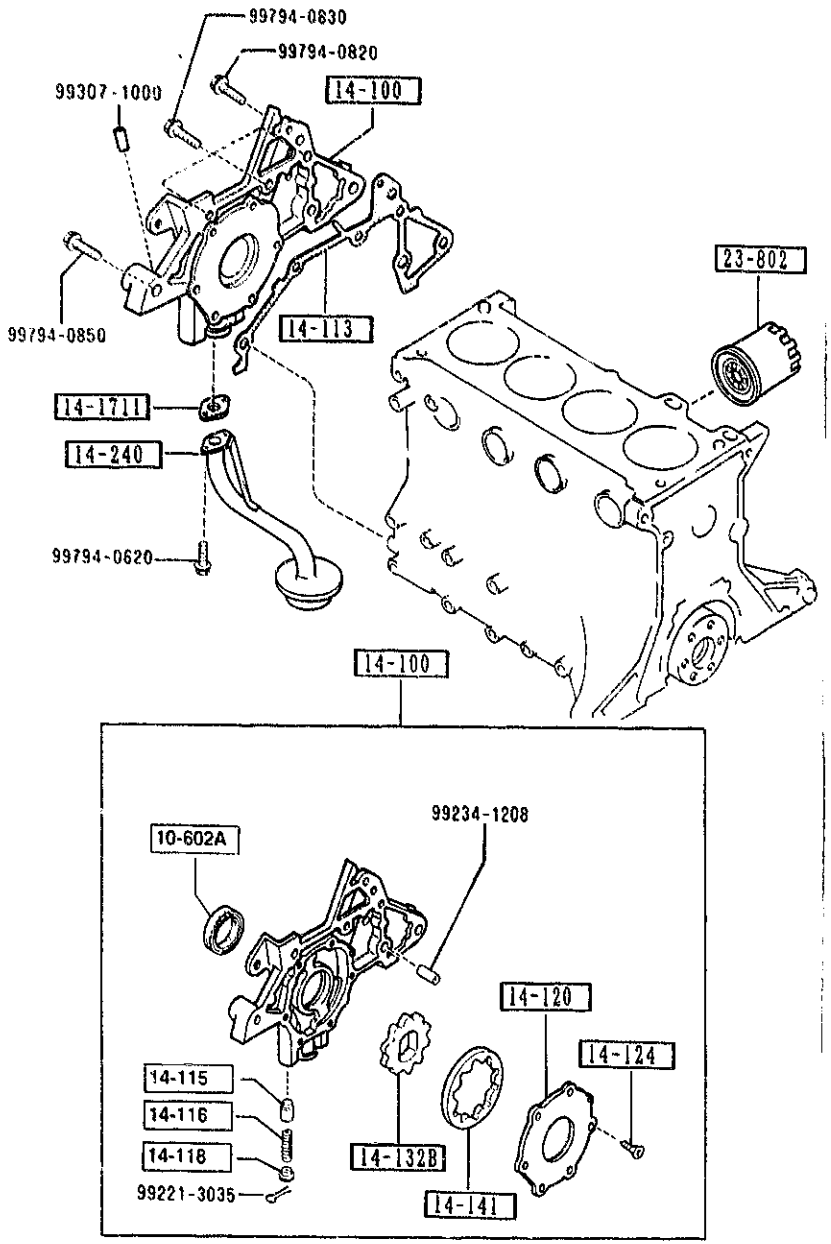

PART NO.	QTY	MODEL/RESTRICTION	MODEL/RESTRICTION	MODEL/RESTRICTION	FROM-TO
14-141		GEAR,OUTER			
B660-14-141	1				-0910
B6S7-14-141	1				0910-
14-1711		GASKET,OIL STRAINER			
0810-14-171A	1	ASBESTOS			
14-240		STRAINER,OIL			
B61P-14-240	1				
23-802		CARTRIDGE,OIL FILTER			
B6Y1-14-302	1	TOKYO ROKI			

0910 NA35✱✱-209446

1500 COOLING SYSTEM

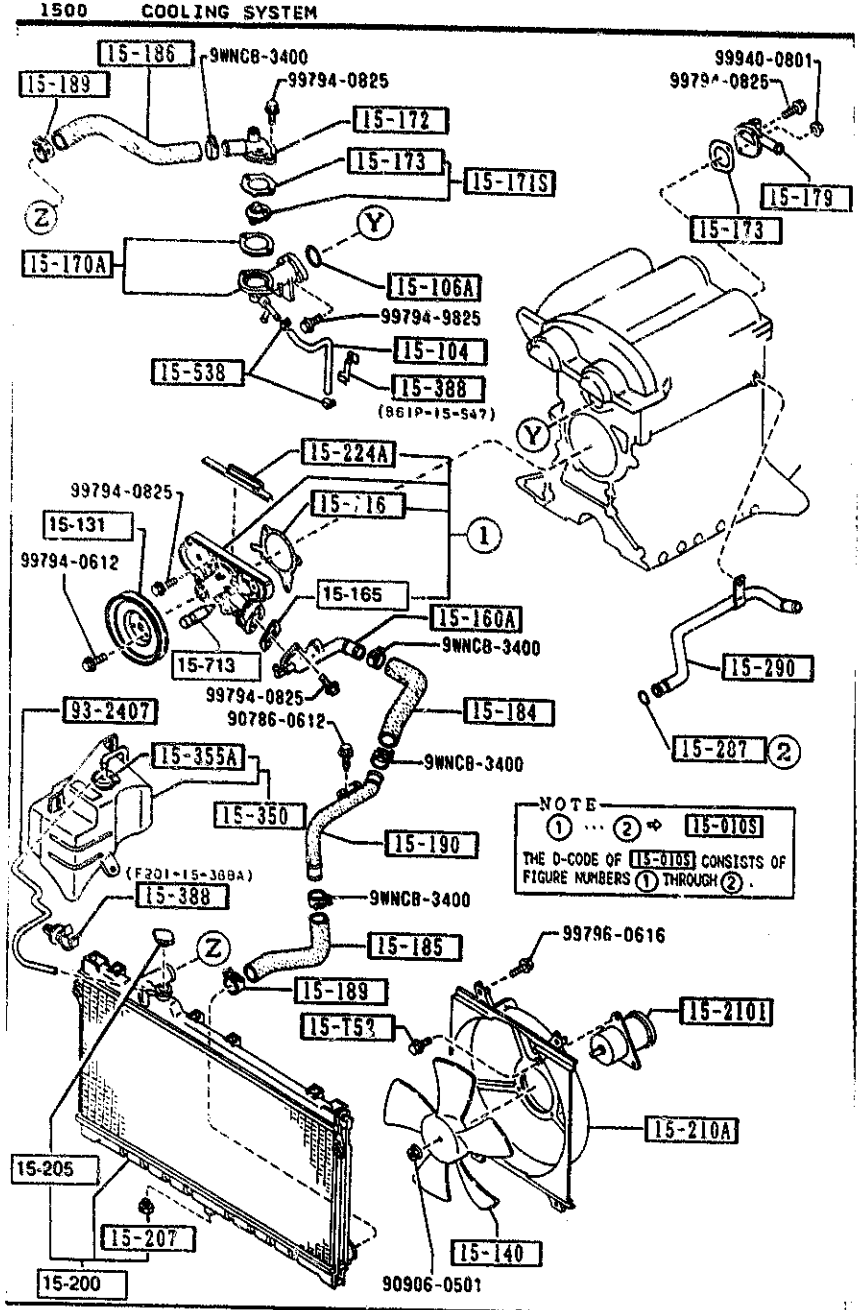

AUNA02

PART NO.	QTY	MODEL/RESTRICTION	MODEL/RESTRICTION	MODEL/RESTRICTION	FROM-TO
15-T52		SCREW,MOTOR-ELECTRIC FAN			
B6S8-15-T52	3				
15-010S		PUMP SET,WATER			
8AB8-15-010	1	NON ASBESTOS			
15-104		HOSE,WATER BY-PASS			
B61P-15-261A	1				
15-106A		RING,'O'-WATER PUMP			
B61P-15-106	1				
15-116		GASKET,WATER PUMP			
B621-15-116A	1	NON ASBESTOS			
15-131		PULLEY,WATER PUMP			
B366-15-131A	1				
15-140		FAN,COOLING			
B6S8-15-140A	1	CALSONIC (AT)			-1301
B61P-15-140	1	(MT)			-1301
B61P-15-140A	1	(MT)			1301-
B64J-15-140	1	CALSONIC (AT)			1301-
15-160A		INLET,WATER PUMP			
B61P-15-160	1				
15-165		GASKET,W.PUMP INLET			
B621-15-165		NON ASBESTOS			
A (B366-15-165)	1				-2101
B366-15-165	1				2101-
15-170A		COVER,THERMO			
*B61P-15-170B	1				
15-171S		THERMOSTAT SET			
8AN1-15-171	1	NON ASBESTOS			

1301 NA35**-231464
2101 NA35**-313937

CAT. AUNA02-07

1993-12

1500 COOLING SYSTEM

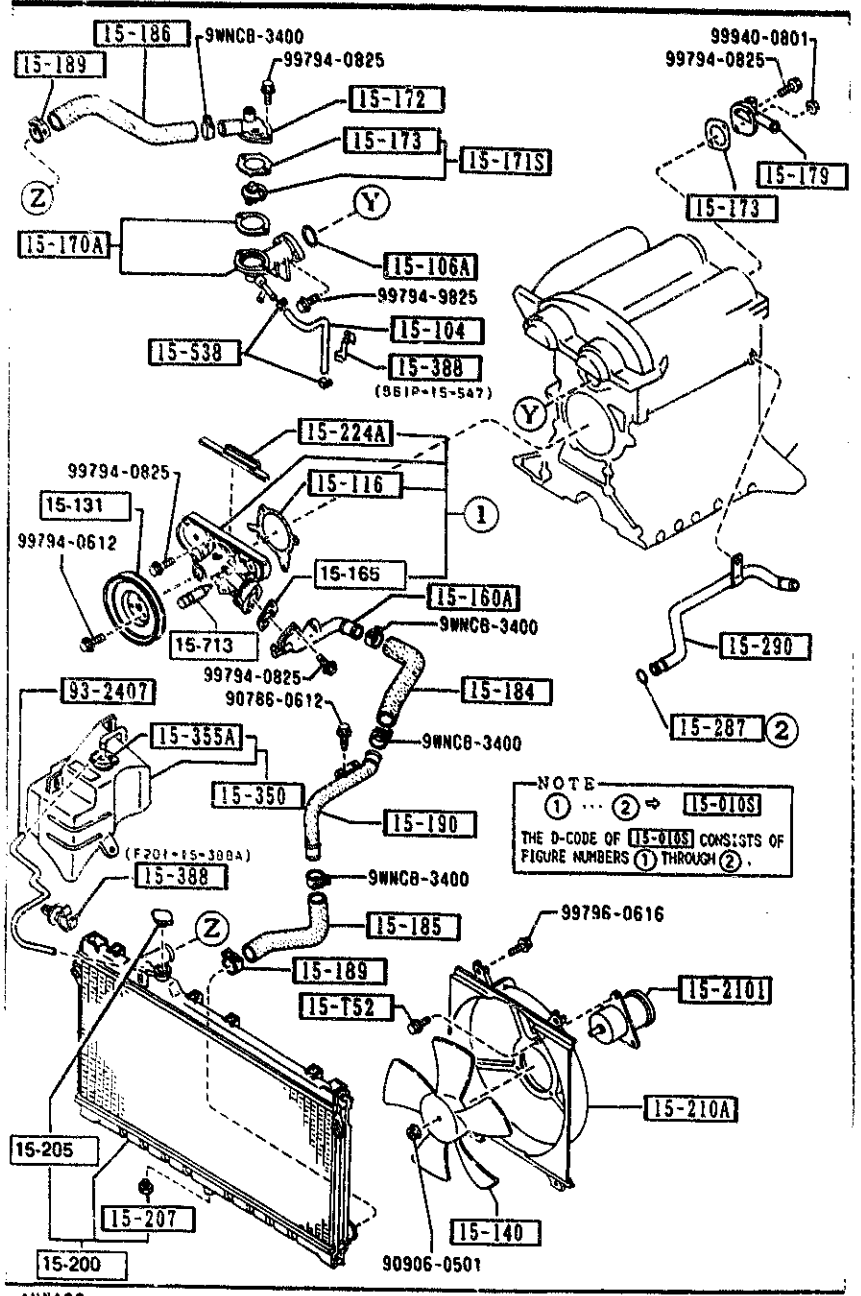

PART NO.	QTY	MODEL/RESTRICTION	MODEL/RESTRICTION	MODEL/RESTRICTION	FROM-TO
15-172		COVER,THERMOSTAT			
B61P-15-172	1				
15-173		GASKET,THERMOSTAT COVER			
B621-15-173	2	NON ASBESTOS			-2210
B366-15-173	2				2210-
15-179		OUTLET,WATER			
B61P-15-179A	1				
15-184		HOSE,WATER			
B61P-15-184	1				
15-185		HOSE,WATER			
B61P-15-185	1				
15-186		HOSE,WATER			
B61P-15-186	1				
15-189		CLAMP,HOSE			
B366-15-182	2				
15-190		PIPE,WATER			
B61P-15-190	1				
15-200		RADIATOR			
B61P-15-200 AN(B61P-15-200A)	1	CALSONIC			-0710
B64J-15-200A AN(B64J-15-200B)	1	CALSONIC			-0710
B61P-15-200A A (B61P-15-200B)	1	CALSONIC			0710-1220
B64J-15-200B A (B64J-15-200C)	1	CALSONIC			0710-1220
B61P-15-200B	1	CALSONIC (MT)			1220-
B64J-15-200C	1	CALSONIC (AT)			1220-
15-205		CAP,RADIATOR			
D316-15-205	1	CALSONIC			

0710 NA35**-201527
1220 NA35**-230412
2210 NA35**-317616

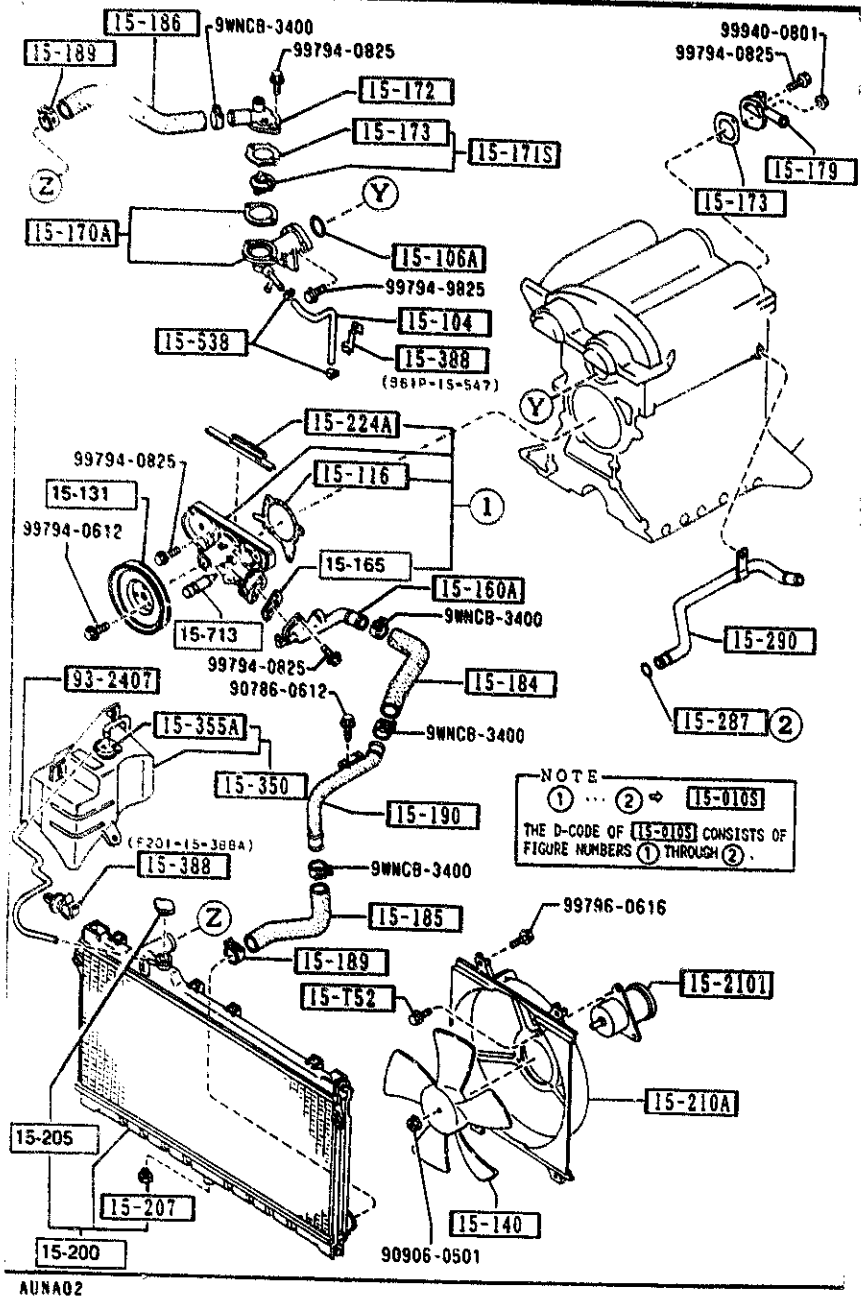

AUNA02

PART NO.	QTY	MODEL/RESTRICTION	MODEL/RESTRICTION	MODEL/RESTRICTION	FROM TO
15-207		COCK,DRAIN			
N326-15-203	1				
15-210A		COWLING,RADIATOR			
B61P-15-210A	1				-1301
B61P-15-210B	1				1301-
15-2101		FAN DRIVE			
B61P-15-150A	1	(MT)			-1301
B64J-15-150	1	(AT)			-1301
B61P-15-150B	1	(MT)			1301-
B64J-15-150A	1	(AT)			1301-
15-224A		RUBBER,SEAL			
B660-10-543B	1				
15-287		RING,O'-WATER BYPAS S			
E301-15-287	1				
15-290		PIPE,BYPASS			
B61P-15-290B	1				
15-350		TANK,SUB-RADIATOR			
361P-15-350C A (B61P-15-350D)	1				-2501
B61P-15-350D	1				2501-
15-355A		CAP,SUB TANK			
B61P-15-355A	1				
15-388		CLIP,HOSE-SUB T.& WA TER H			
F201-15-388A	1				
B61P-15-547	1				
15-538		CLAMP,WATER HOSE			
JF02-15-538	2				
15-713		SET PIN,SPRING			
F801-15-713	1				

1301 NA35**-231464
2501 NA35**-326361

CAT. AUNA02-07

1993-12

1500 COOLING SYSTEM

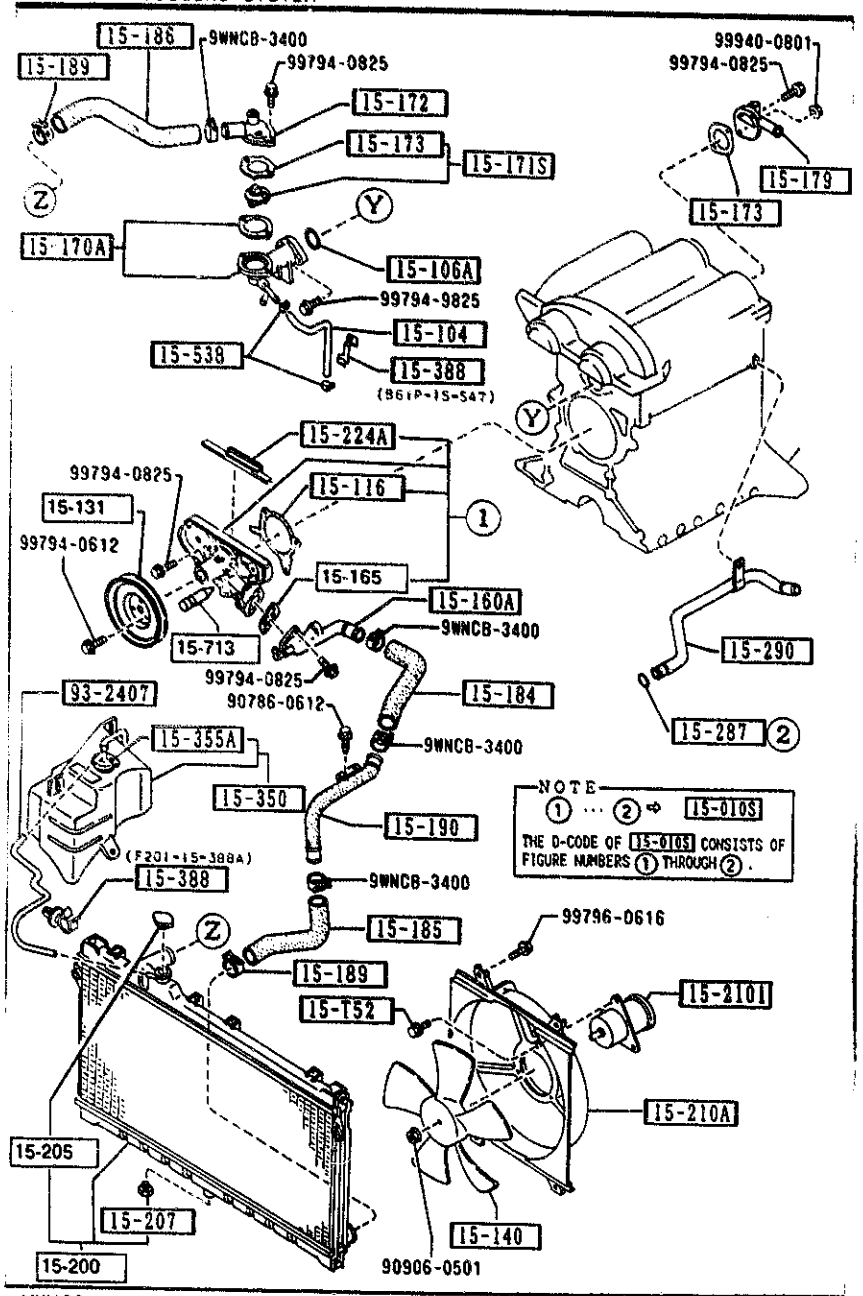

AUNA02

PART NO.	QTY	MODEL/RESTRICTION	MODEL/RESTRICTION	MODEL/RESTRICTION	FROM TO
93-2407		HOSE,WATER			
99324-07610	1				

CAT. AUNA02-07

1993-12

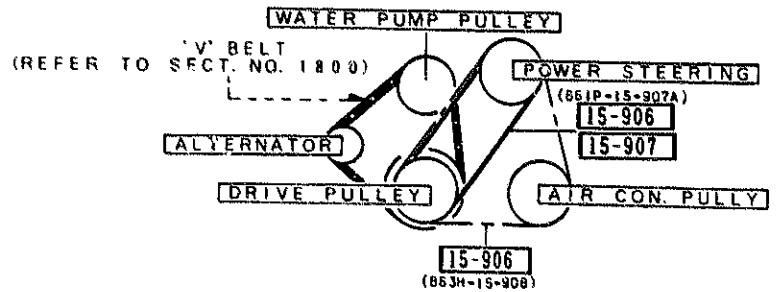

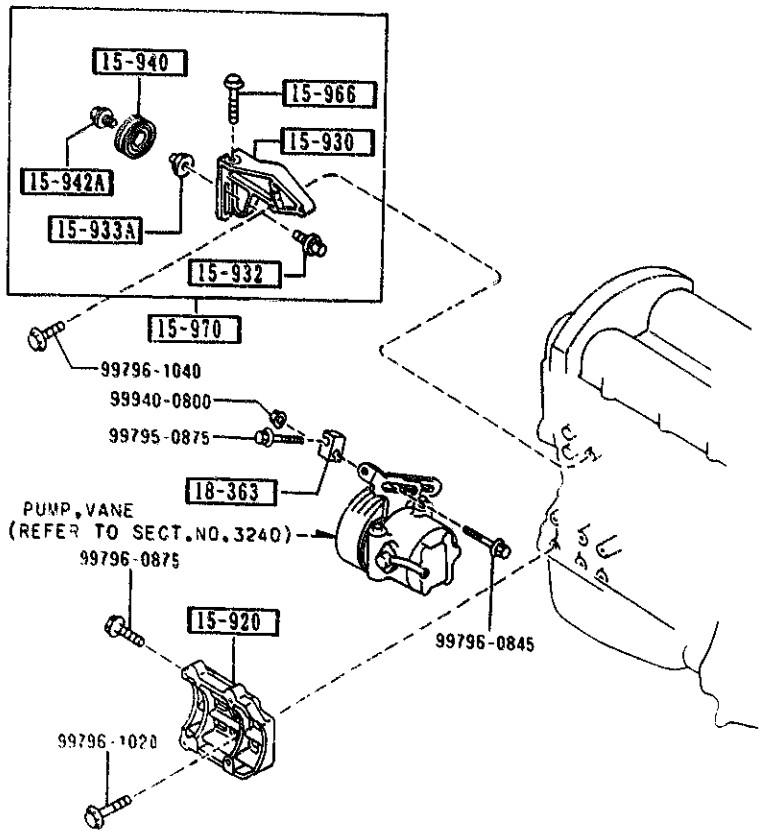

AUNA02

PART NO.	QTY	MODEL/RESTRICTION	MODEL/RESTRICTION	MODEL/RESTRICTION	FROM-TO
15-906		BELT'V'			
B61P-15-907A	1	L=855 4PK RIB.BELT ((W/O AIR-CON.,W/ P.S.))			
B63H-15-908	1	L=855 4PK RIB.V. ((W/ AIR-CON.,W/O P.S.))			
15-907		BELT'V'			
B63H-15-909	1	L=955 4PK RIB.V. ((W/ AIR-CON.,W/ P.S.))			
15-920		BRACKET,COMPRESSOR			
×B61P-15-810A	1	(A) (W/AIR CON.)			
15-930		BRACKET,IDLE PULLEY			
BP01-15-951	1	(A) ((W/ AIR-CON.,W/O P.S.))			
15-932		SHAFT,PULLEY			
B631-15-932	1	(A) ((W/ AIR-CON.,W/O P.S.))			
15-933A		COLLAR			
BP01-15-933	1	(A) ((W/ AIR-CON.,W/O P.S.))			
15-940		PULLEY,IDLE			
BP01-15-940	1	(A) ((W/ AIR-CON.,W/O P.S.))			
15-942A		COLLAR			
E564-15-942	1	(A) ((W/ AIR-CON.,W/O P.S.))			
15-966		BOLT,ADJUST			
E564-15-934	1	(A) ((W/ AIR-CON.,W/O P.S.))			
15-970		PULLEY,IDLE			

1580 BRACKET,PULLEY & BELT

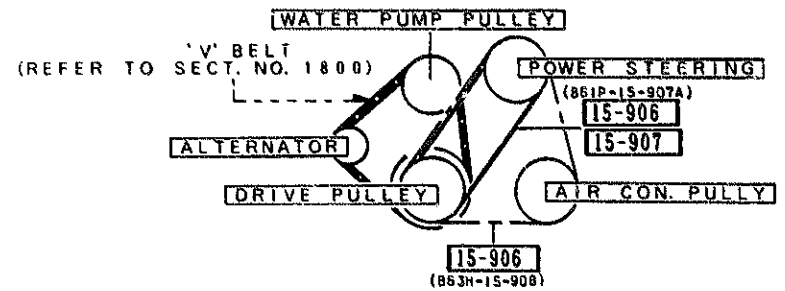

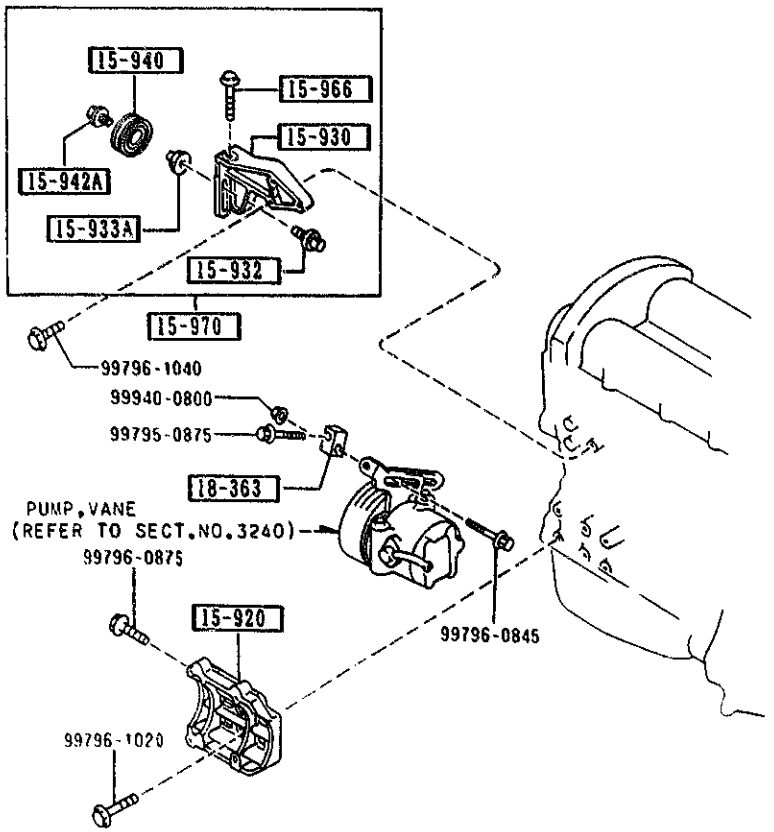

PART NO.	QTY	MODEL/RESTRICTION	MODEL/RESTRICTION	MODEL/RESTRICTION	FROM-TO
CONT'D					
BP01-15-930	1	(A) ((W/ AIR-CON.,W/O P. S.))			
18-363		SPACER,STRAP			
F201-18-363	1	((W/O AIR-CON.,W/ P. S.))			

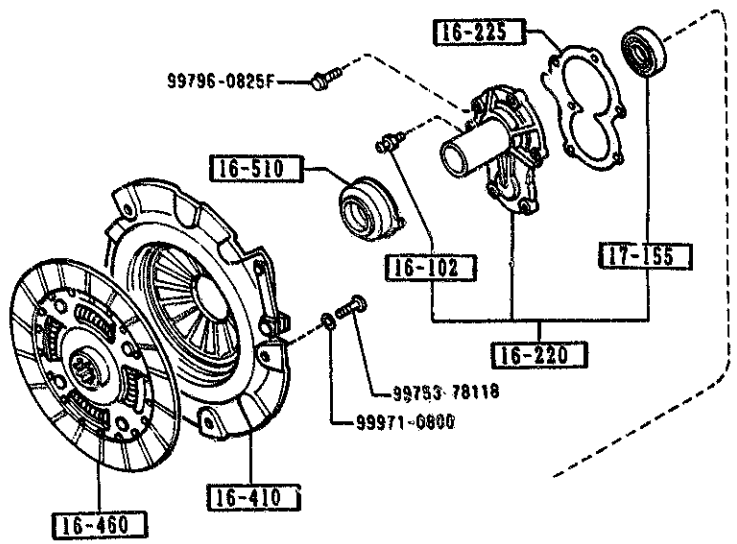

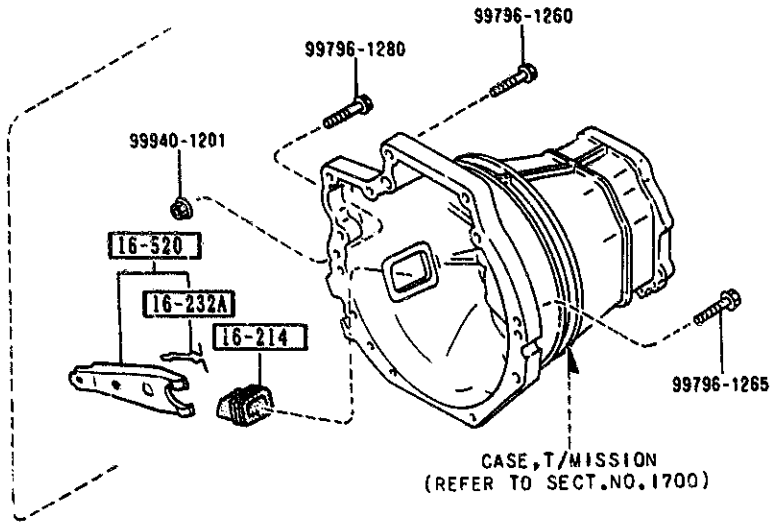

PART NO.	QTY	MODEL/RESTRICTION	MODEL/RESTRICTION	MODEL/RESTRICTION	FROM TO
16-102 0603-16-1020	1	PIN,PIVOT-CLUTCH REL .FORK			
16-214 FE86-16-214	1	COVER,DUST-CLUTCH FO RK			
16-220 B622-16-220	1	COVER,FRONT CLUTCH			
16-225 FE50-16-225A	1	GASKET,FRONT COVER			
16-232A 1416-16-232A	1	SUPPORTER,FORK			
16-410 B622-16-410	1	COVER,CLUTCH			
16-460 B622-16-460A	1	DISC,CLUTCH ASBESTOS			-2201
B630-16-460	1	NON ASBESTOS			2201-
16-510 B622-16-510	1	COLLAR,CLUTCH REL.			
16-520 B622-16-520	1	FORK,CLUTCH RELEASE			
17-155 H501-17-103	1	SEAL,OIL			

2201 NA35✱✱-316887

1700 -1 M TRANSMISSION CASE (MANUAL)

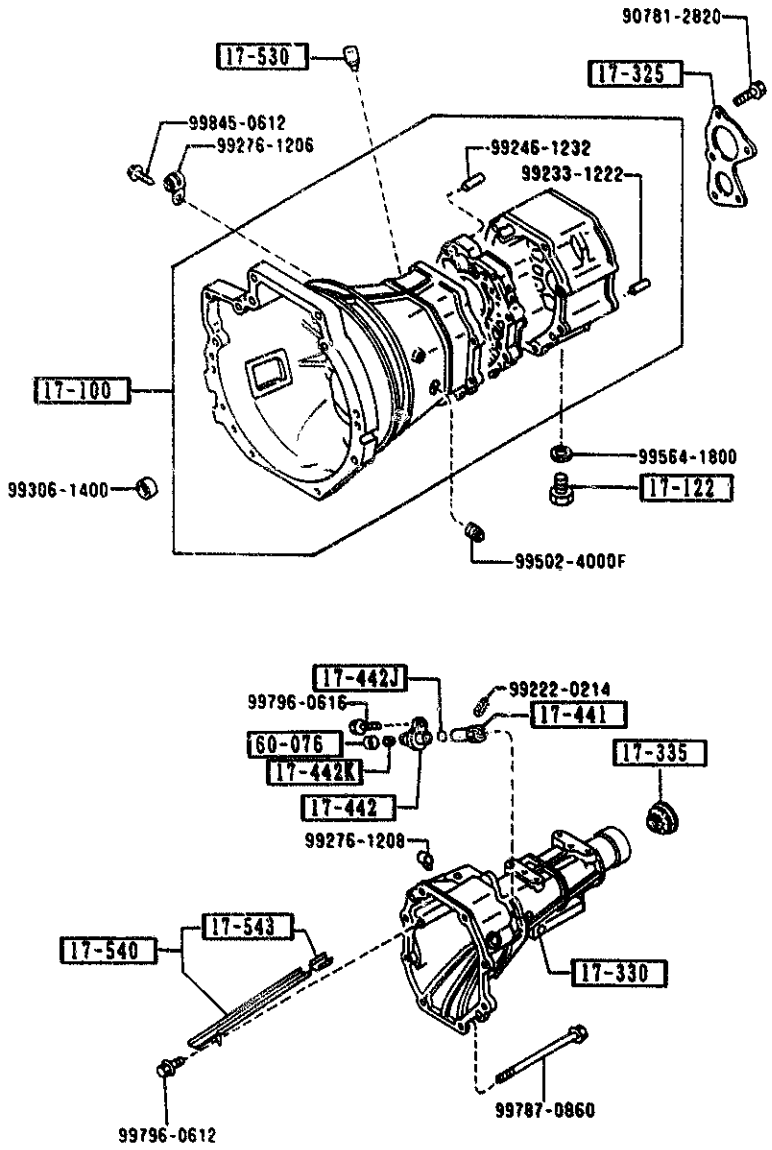

PART NO.	QTY	MODEL/RESTRICTION	MODEL/RESTRICTION	MODEL/RESTRICTION	FROM TO
17-100		CASE,T/MISSION			
M526-17-100	1				
17-122		PLUG,MAGNET			
0810-17-121	1				
17-325		COVER,BEARING			
8086-17-326	1				
17-330		HOUSING,EXTENSION			
MM519-17-330	1				
17-335		SEAL,OIL			
M507-17-335 A (M507-17-335A)	1				-2511
M507-17-335A	1				2511-
17-441		GEAR,DRIVEN			
1472-17-441A	1	N=23			
17-442		SLEEVE,SPEEDOMETER			
1669-17-442B	1				
17-442J		RING,'O'			
1011-17-443	1				
17-442K		SEAL,OIL			
99586-08166	1				
17-530		BREATHER,AIR-T/MISSION			
0884-17-530	1				
17-540		PASS,OIL			
M509-17-540	1				
17-543		RUBBER,SEAL			
M501-17-543A	1				
60-076		GASKET,GUIDE SEAL-SPEEDO.			
B092-60-076A	1				

2511 NA35**-327112

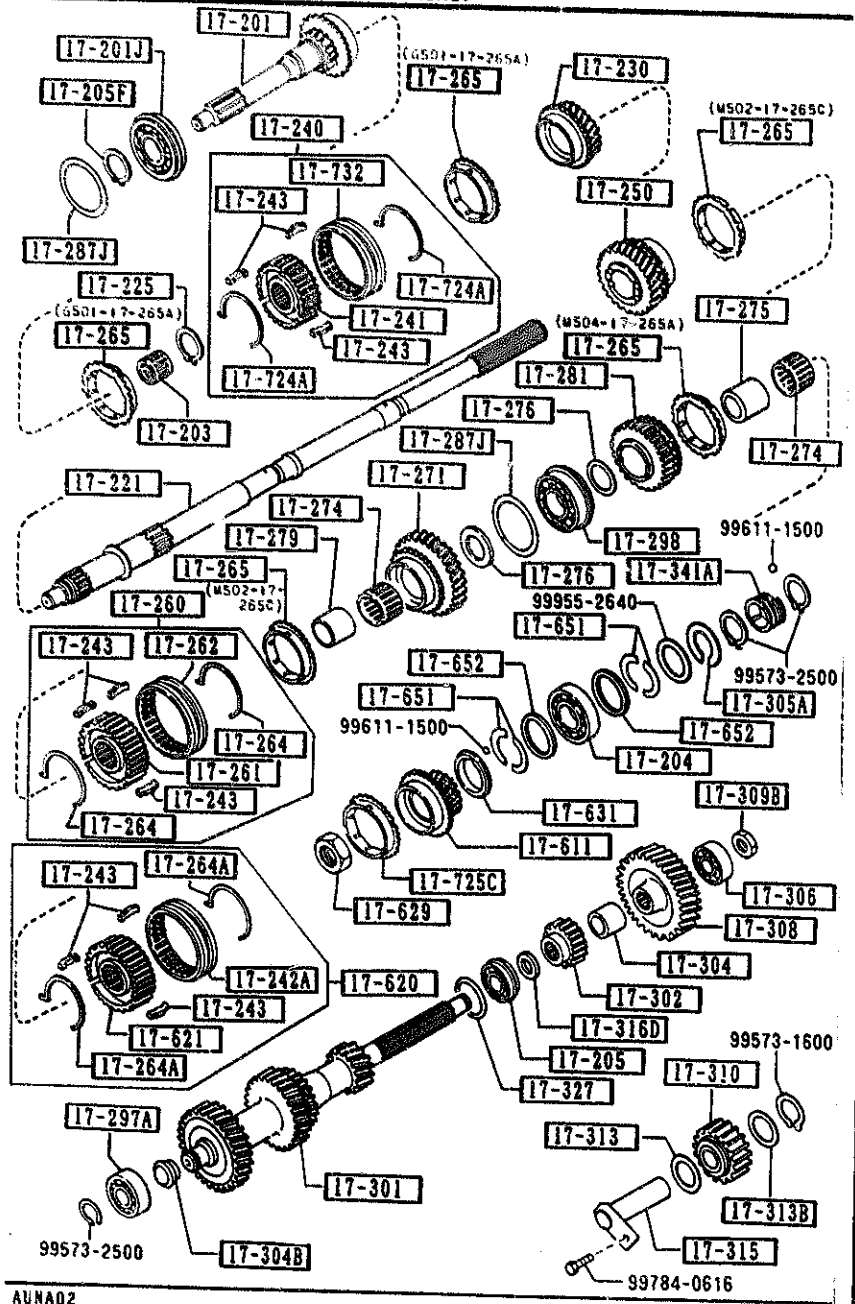

AUNA02

PART NO.	QTY	MODEL/RESTRICTION	MODEL/RESTRICTION	MODEL/RESTRICTION	FROM TO
17-201 M516-17-201	1	GEAR,MAIN DRIVE			
17-201J M502-17-295C	1	BEARING,BALL-MAIN DRIVE GEAR			
17-203 M501-17-210	1	BEARING,NEEDLE			
17-204 M503-17-204	1	BEARING,BALL-MAIN SHAFT			
17-205 R502-17-306A	1	BEARING,ROLLER			
17-205F M501-17-205	1	RING,RETAINING			
17-221 M505-17-221B	1	SHAFT,MAIN			
17-225 0317-17-225	1	RING,SNAP			
17-230 M513-17-231	1	GEAR,3RD			
17-240 M502-17-240C AN(M502-17-240D)	1	HUB SET,CLUTCH-3RD & 4TH			-1513
M502-17-240D	1				1513-
17-241 M501-17-241B AN(M501-17-241C)	1	HUB,CLUTCH			-1513
M501-17-241C	1				1513-
17-242A F401-17-242A	1	SLEEVE,CLUTCH HUB			
17-243		KEY,SYNCHRONIZER			

1513 NA35**-234232

CAT. AUNA02-07

1993-12

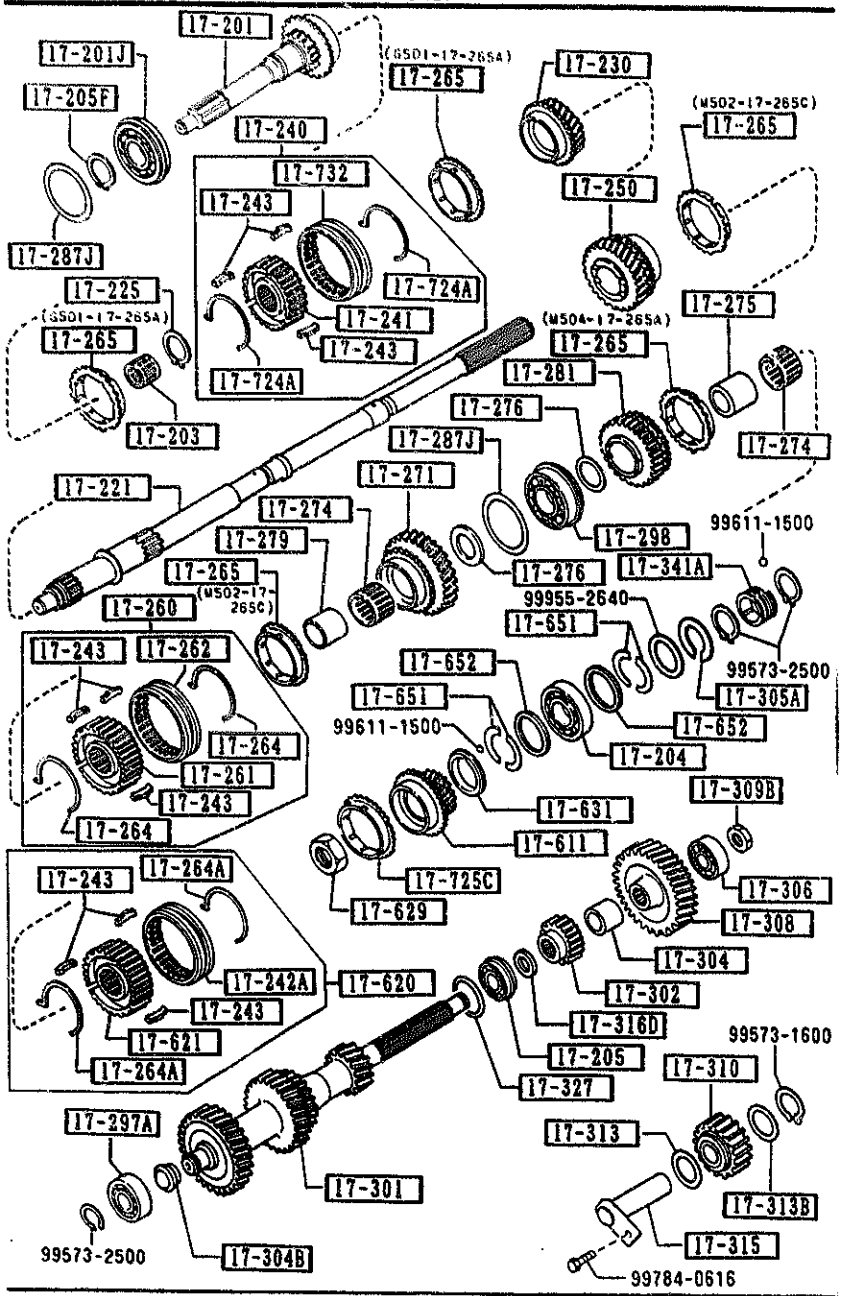

AUNA02

PART NO.	QTY	MODEL/RESTRICTION	MODEL/RESTRICTION	MODEL/RESTRICTION	FROM-TO
CONT'D					
F401-17-243A	9				
| 17-250 |		GEAR,2ND			
M515-17-251 A (M515-17-251A)	1				-1801
M515-17-251A	1				1801-
| 17-260 |		HUB SET,CLUTCH-1ST & 2ND			
M505-17-260A A (M505-17-260B)	1				-1115
M505-17-260B AN(M505-17-260C)	1				1115-2201
M505-17-260C	1				2201-
| 17-261 |		HUB,CLUTCH			
M502-17-261	1				
| 17-262 |		SLEEVE,CLUTCH HUB			
M503-17-262 A (M503-17-262A)	1				-1115
M503-17-262A AN(M503-17-262B)	1				1115-2201
M503-17-262B	1				2201-
| 17-264 |		SPRING,SYNCHRO. KEY			
G401-17-264	2				
| 17-264A |		SPRING,SYNCHRONIZER			
F401-17-264A	2				
| 17-265 |		RING,SYNCHRONIZER			
G501-17-265A	2				
M504-17-265A	1				
M502-17-265A A (M502-17-265B)	2				-0C05
M502-17-265B A (M502-17-265C)	2				0C05-1410
M502-17-265C	2				1410-
| 17-271 |		GEAR,1ST			
M516-17-271 AN(M516-17-271A)	1				-2201

0C05 NA35**-221271
1115 NA35**-225012
1410 NA35**-233076
1501 NA35**-235561
2201 NA35**-316887

CAT. AUNA02-07

1993-12

1710 TRANSMISSION GEARS(MANUAL)

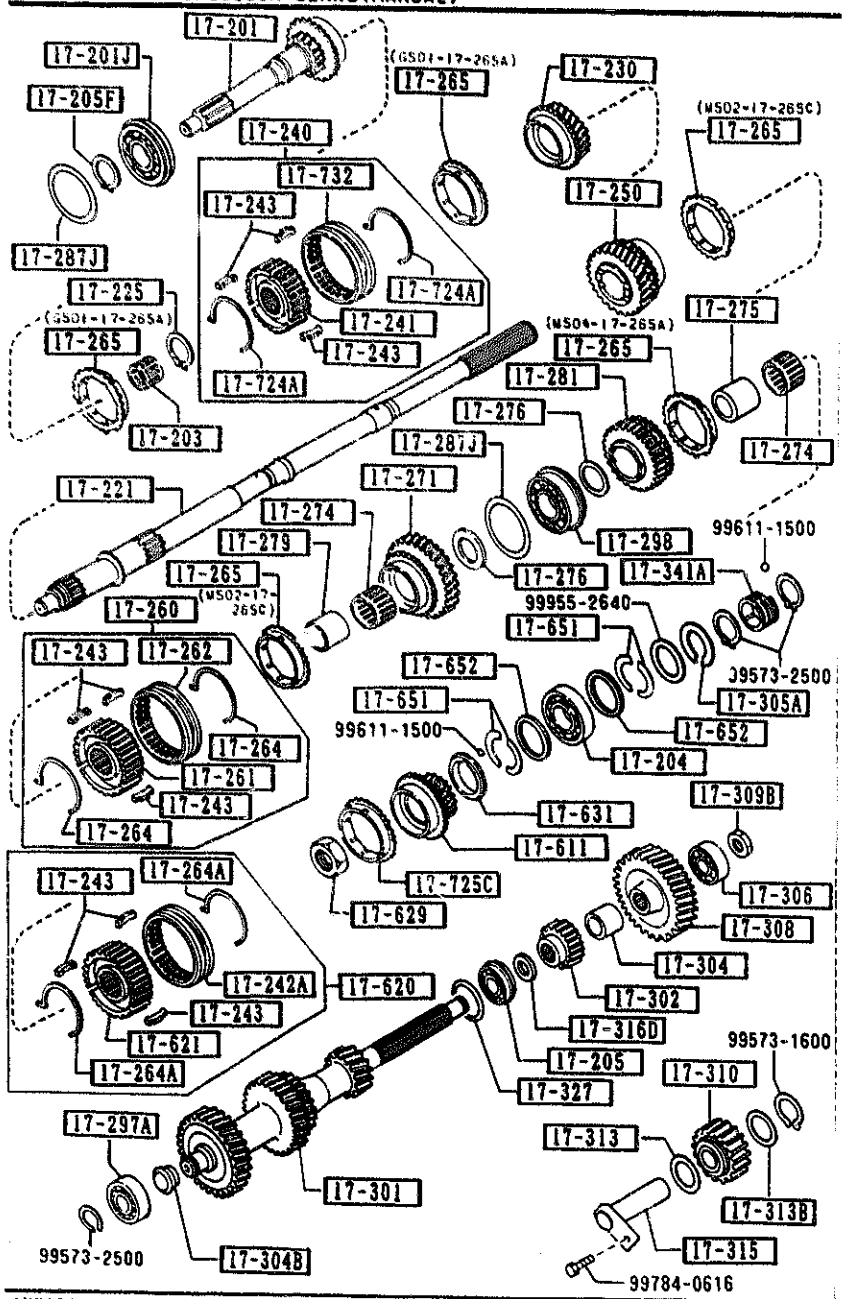

AUNA02

PART NO.	QTY	MODEL/RESTRICTION	MODEL/RESTRICTION	MODEL/RESTRICTION	FROM-TO
CONT'D					
M516-17-271A	1				2201-
17-274		BEARING,NEEDLE			
4069-17-283A	2				
17-275		RACE,INNER			
4069-17-284E	1				
17-276		WASHER,THRUST			
0259-17-274A	2	T=3MM			
0259-17-276	2	T=2.2MM			
0259-17-277	2	T=2.7MM			
0259-17-278	2	T=3.2MM			
0259-17-279	2	T=3.7MM			
17-279		SLEEVE,GEAR			
8540-17-275A	1				
17-281		GEAR,REVERSE			
M509-17-281A	1				
17-287J		SHIM,ADJUST			
99963-6310	2	T=0.1MM			
99963-6315	1	T=0.15MM			
99963-6330	2	T=0.3MM			
17-297A		BEARING,BALL-COUNTER SHAFT G.			
M502-17-297A	1				
17-298		BEARING			
M502-17-298A	1				
17-301		GEAR,COUNTER SHAFT			
M528-17-301	1				

2201 NA35**-316887

1710 -4 TRANSMISSION GEARS(MANUAL)

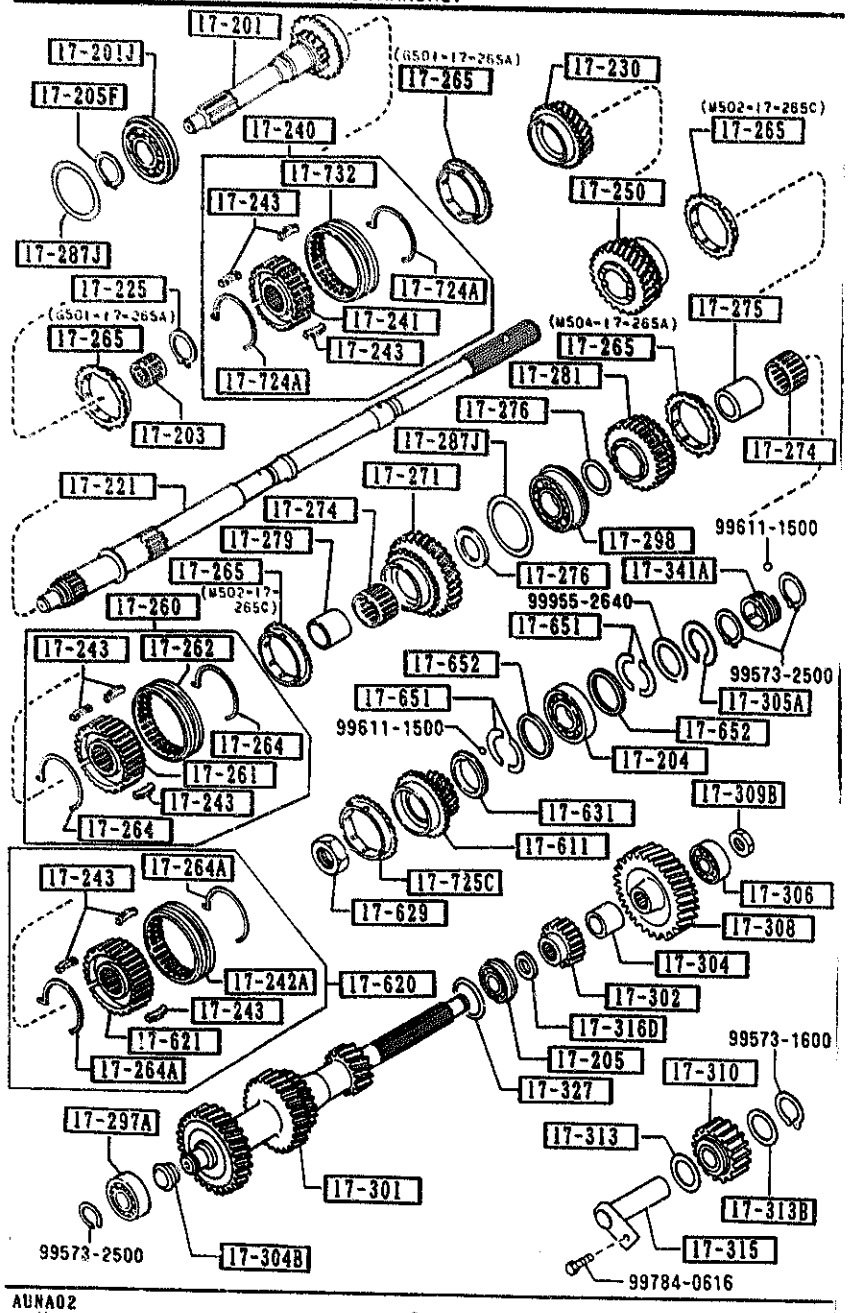

AUNA02

PART NO.	QTY	MODEL/RESTRICTION	MODEL/RESTRICTION	MODEL/RESTRICTION	FROM 10
17-302		GEAR,COUNTER REVERSE			
M512-17-302A	1				
17-304		SPACER			
M504-17-304	1				
17-304B		SPACER			
M501-17-304B	1				
17-305A		RING,RETAINING-BALL BEARING			
0839-17-305B	1				
17-306		BEARING,BALL			
M502-17-299A	1				
17-308		GEAR,COUNTER			
M510-17-308	1				
17-309B		NUT,LOCK-COUNTER SHAFT BR			
M501-17-309	1				
17-310		GEAR,REVERSE IDLE			
M509-17-310A	1				
17-313		WASHER,THRUST-REVERSE IDLE G. T=2MM			
M501-17-313	1				
17-313B		WASHER,THRUST			
4077-17-314A	1	T=2.8MM			
4077-17-315A	1	T=3MM			
4077-17-316	1	T=2.6MM			
17-315		SHAFT,REV. IDLE GEAR			
8086-17-140A	1				
17-316D		SPACER			
R502-17-316	1				

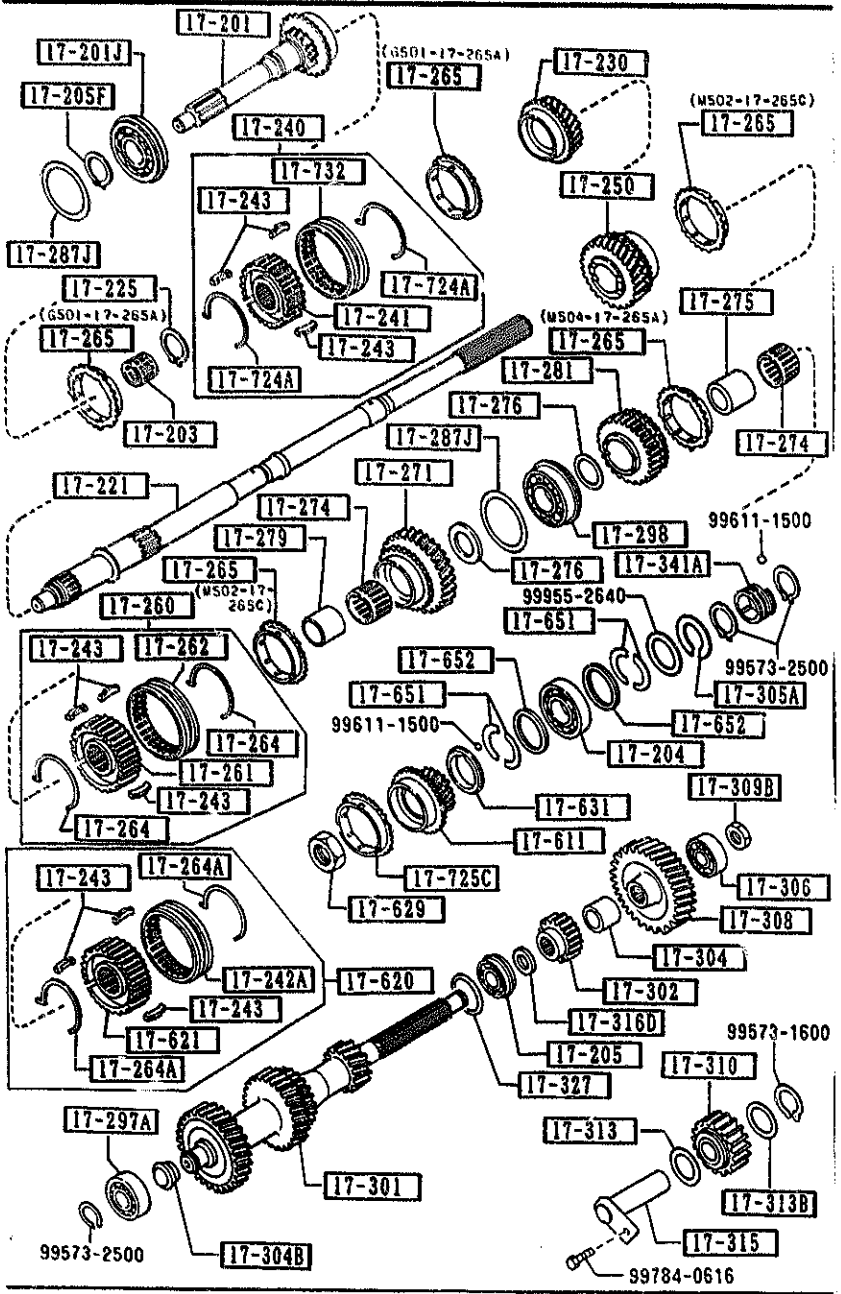

AUNA02

PART NO.	QTY	MODEL/RESTRICTION	MODEL/RESTRICTION	MODEL/RESTRICTION	FROM-TO
17-327		SHIM,ADJUST-COUNTER SHAFT GEAR			
0305-17-327	2	T=0.1MM			
0305-17-328	1	T=0.3MM			
17-341A		GEAR,SPEEDO.DRIVE			
M503-17-341	1				
17-611		GEAR,OVER TOP			
M517-17-611	1				
17-620		HUB SET,CLUTCH-O.T. & REV			
M505-17-620	1				
17-621		HUB,CLUTCH			
M505-17-621	1				
17-629		NUT,LOCK-CLUTCH HUB			
8601-17-629	1				
17-631		WASHER,THRUST LOCK-OVER TOP G.			
0884-17-632B	1	T=6.2MM			
0884-17-633B	1	T=6.4MM			
0884-17-634B	1	T=6.5MM			
0884-17-635B	1	T=6.6MM			
17-651		WASHER,THRUST			
M501-17-651	4	T=3MM			
M501-17-653	2	T=3.1MM			
M501-17-654	2	T=3.2MM			
M501-17-655	2	T=2.9MM			
17-652		RING,THRUST WASHER			
M501-17-652	2	T=2MM			

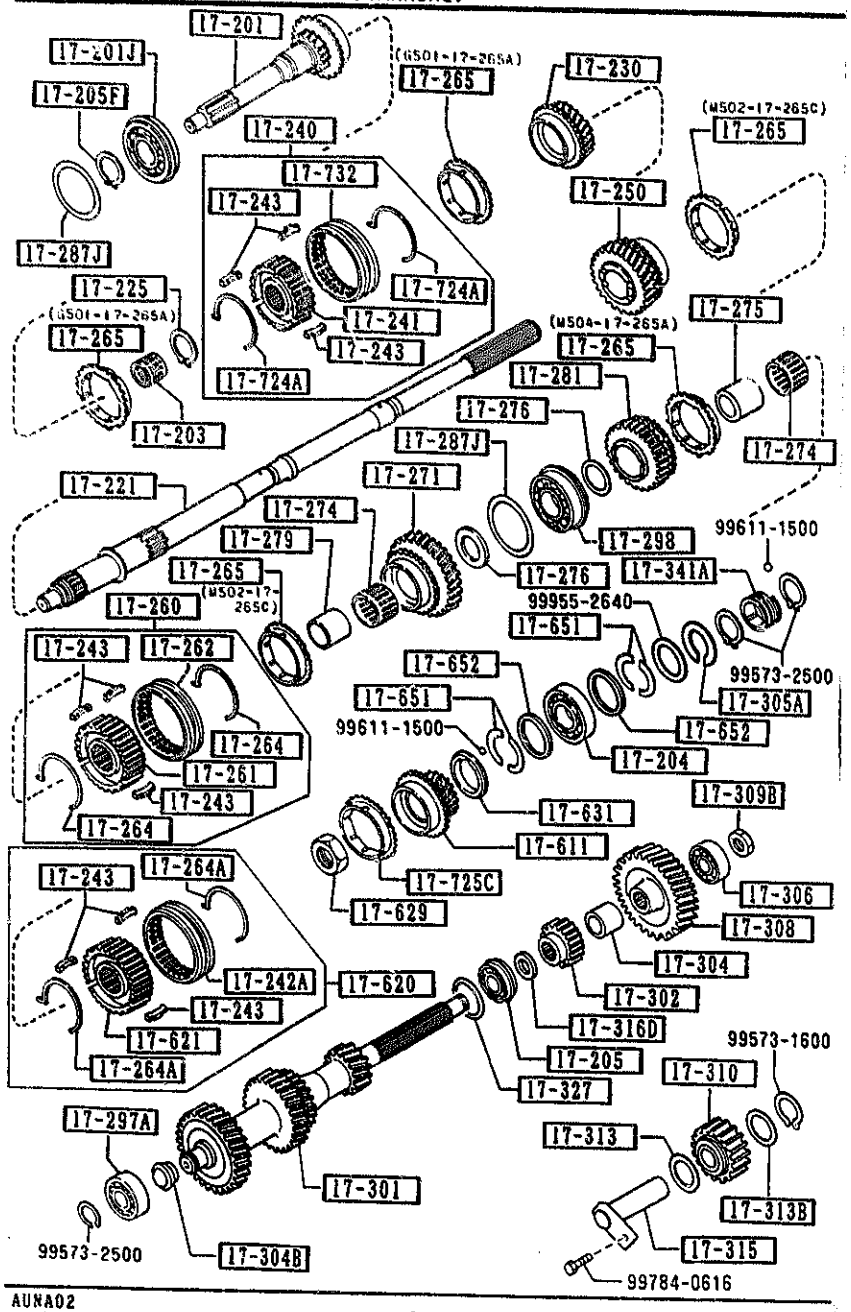

AUNA02

PART NO.	QTY	MODEL/RESTRICTION	MODEL/RESTRICTION	MODEL/RESTRICTION	FROM-TO
17-724A		SPRING,SYNCHRO.KEY			
W501-17-724	2				
17-725C		RING,SYNCHRONIZER			
V501-17-725	1				
17-732		SLEEVE,CLUTCH HUB			
W501-17-732B	1				

CAT. AUNA02-07

1993-12

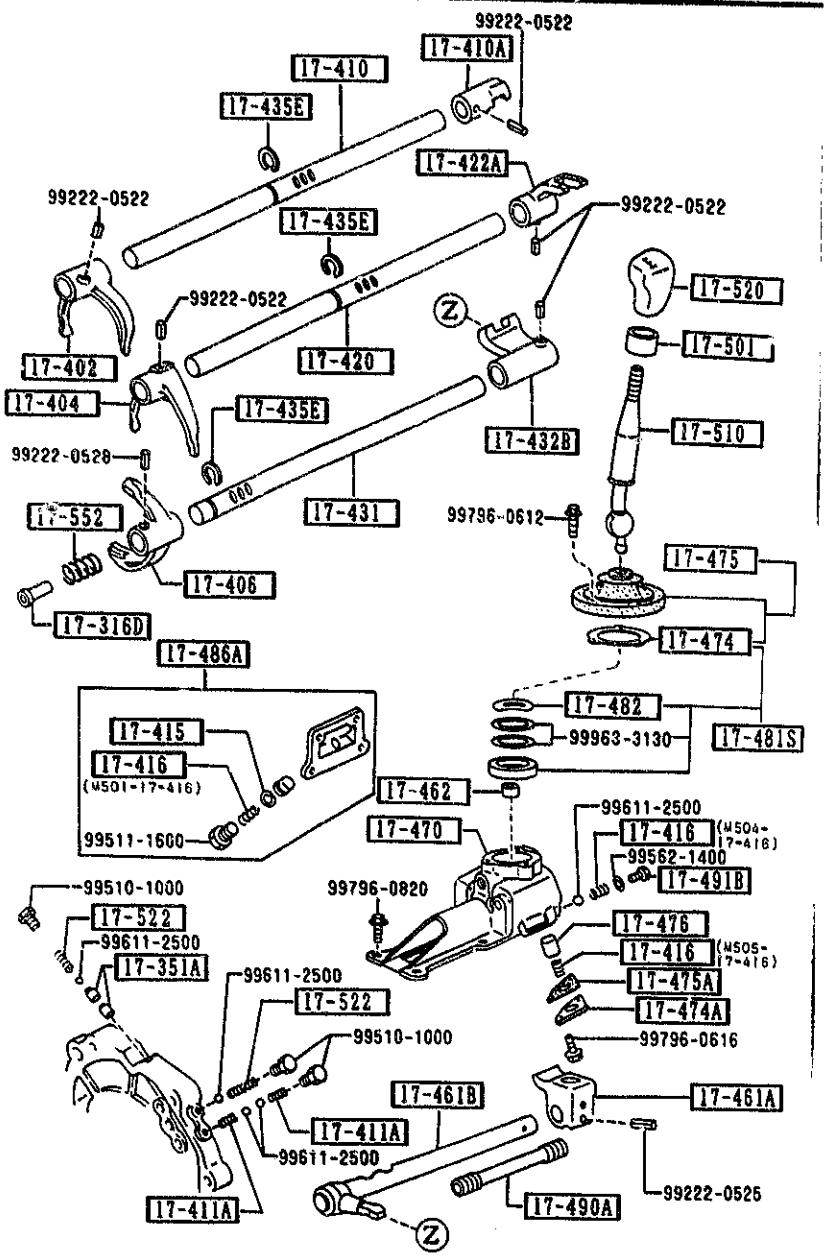

AUNA02

PART NO.	QTY	MODEL/RESTRICTION	MODEL/RESTRICTION	MODEL/RESTRICTION	FROM-TO
17-316D M504-17-316	1	SPACER			
17-351A 0114-17-351	2	PIN,INTER LOCK			
17-402 M503-17-402	1	FORK,SHIFT(1ST&2ND)			
17-404 M501-17-404B	1	FORK,SHIFT(3RD&4TH)			
17-406 M504-17-406A	1	FORK,SHIFT			
17-410 M503-17-411	1	ROD,SHIFT(1ST&2ND)			
17-410A M507-17-412	1	END,S/ROD(1ST&2ND)			
17-411A 0014-17-411	2	SPRING,SHIFT ROD-REVERSE			
17-415 3648-17-415	1	RING,RETAINING-SHIFT ROD END			
17-416 M501-17-416	1	SPRING,SHIFT ROD END			
M504-17-416	1				
M505-17-416	1				
17-420 M503-17-421	1	ROD,SHIFT(3RD&4TH)			
17-422A M507-17-422	1	END,S/ROD(3RD&4TH)			
17-431 M506-17-431A	1	ROD,SHIFT-OVER TOP & REVERSE			

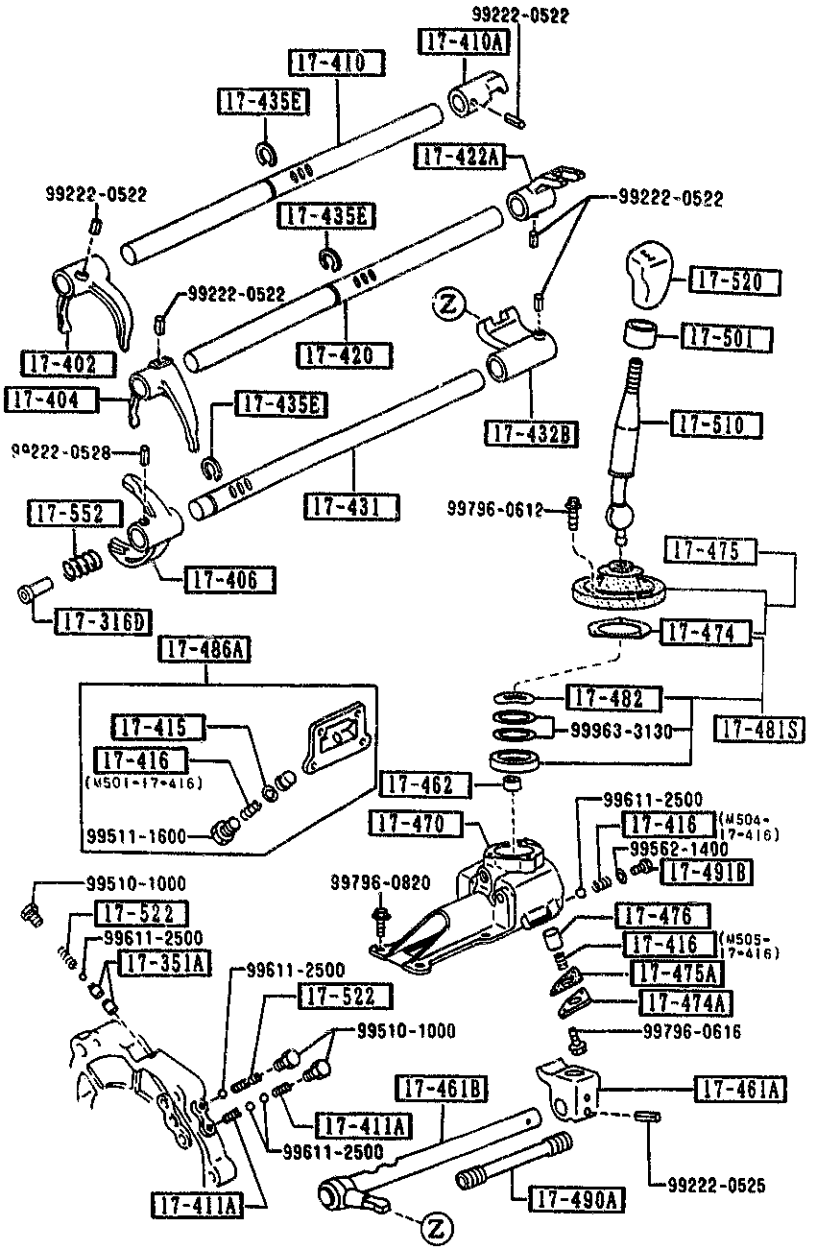

PART NO.	QTY	MODEL/RESTRICTION	MODEL/RESTRICTION	MODEL/RESTRICTION	FROM-TO
17-432B M508-17-432	1	END,SHIFT ROD(O/TOP& REV.)			
17-435E R502-17-435	3	RING,RETAINING			
17-461A M508-17-461	1	END,CONTROL LEVER			
17-461B M516-17-450	1	ROD,CONTROL			
17-462 0398-17-462A	1	SHEET,SPRING			
17-470 M510-17-470C	1	CASE,CHANGE CONTROL			
17-474 0303-17-474	1	GASKET,COVER PLATE			
17-474A M501-17-474	1	CAP,SPRING			
17-475 M514-17-480A	1	BOOT,DUST-CHANGE LEVER			
17-475A M501-17-475	1	GASKET,SPRING CAP			
17-476 M502-17-476A	1	SPINDLE,SELECT LOCK			
17-481S M505-99-178	1	BUSH SET,CHANGE LEVER			
17-482 M505-17-482	1	WASHER,WAVE-CHANGE CONT.CASE			
17-486A R501-17-47X	1	COVER,BLIND			

1720 -3 M CHANGE CONTROL SYSTEM (MANUAL)

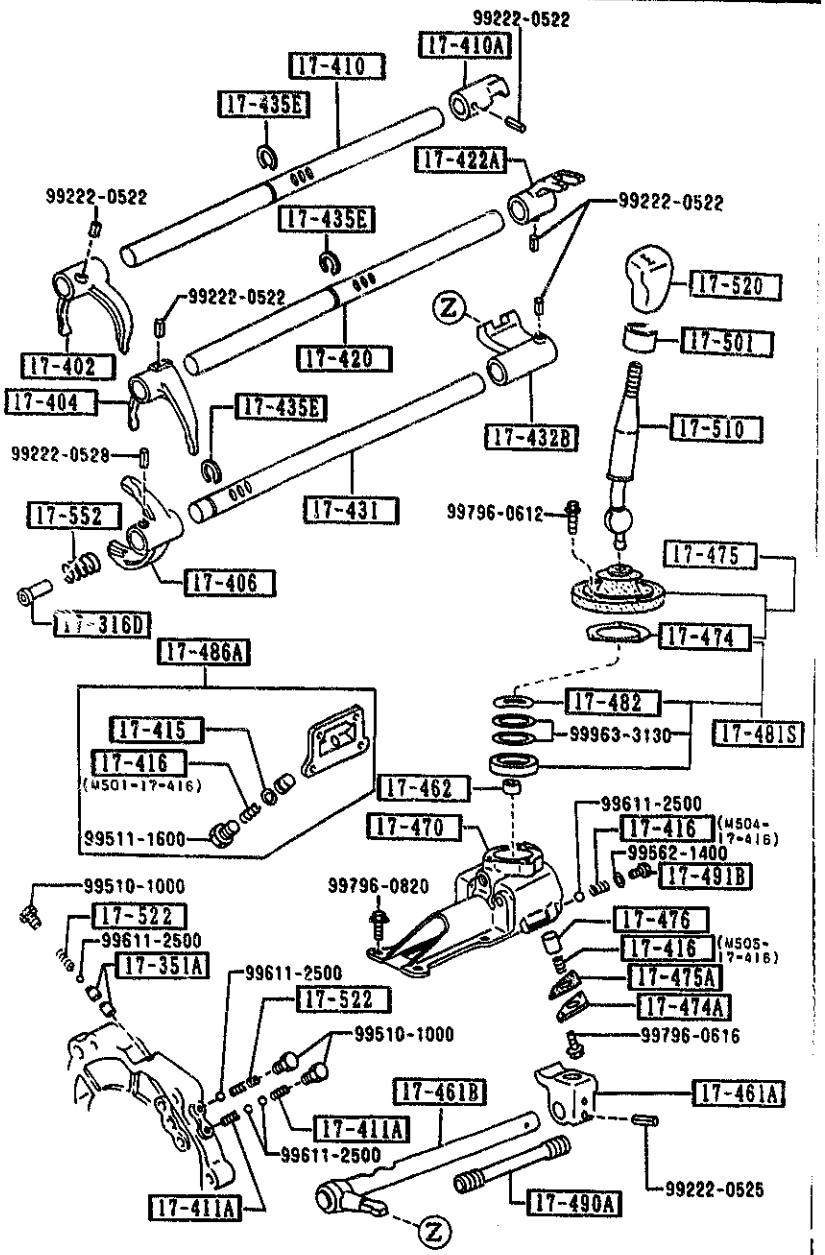

PART NO.	QTY	MODEL/RESTRICTION	MODEL/RESTRICTION	MODEL/RESTRICTION	FROM-TO
17-490A		COVER,ROD			
M504-17-490A	1				
17-491B		CAP,SPRING			
0183-17-491	1				
17-501		INSULATOR,CHG LEVER			
M501-17-501	1				
17-510		LEVER,CHANGE			
M524-17-510A	1				-2101
A (M524-17-510B)					
M524-17-510B	1				2101-
17-520		KNOB,CHANGE LEVER			
M515-17-520	1	BASE, (URETHANE)			
00	INT-	NA0 NA1 NA2 BLACK			
M517-17-520	1	V-SPECIAL, (WOOD)			0801-
17-522		SPRING			
*0103-17-411	2	5TH & REVERSE			
17-552		SPRING			
M504-17-552	1				

0801 NA35**-217311
2101 NA35**-313937

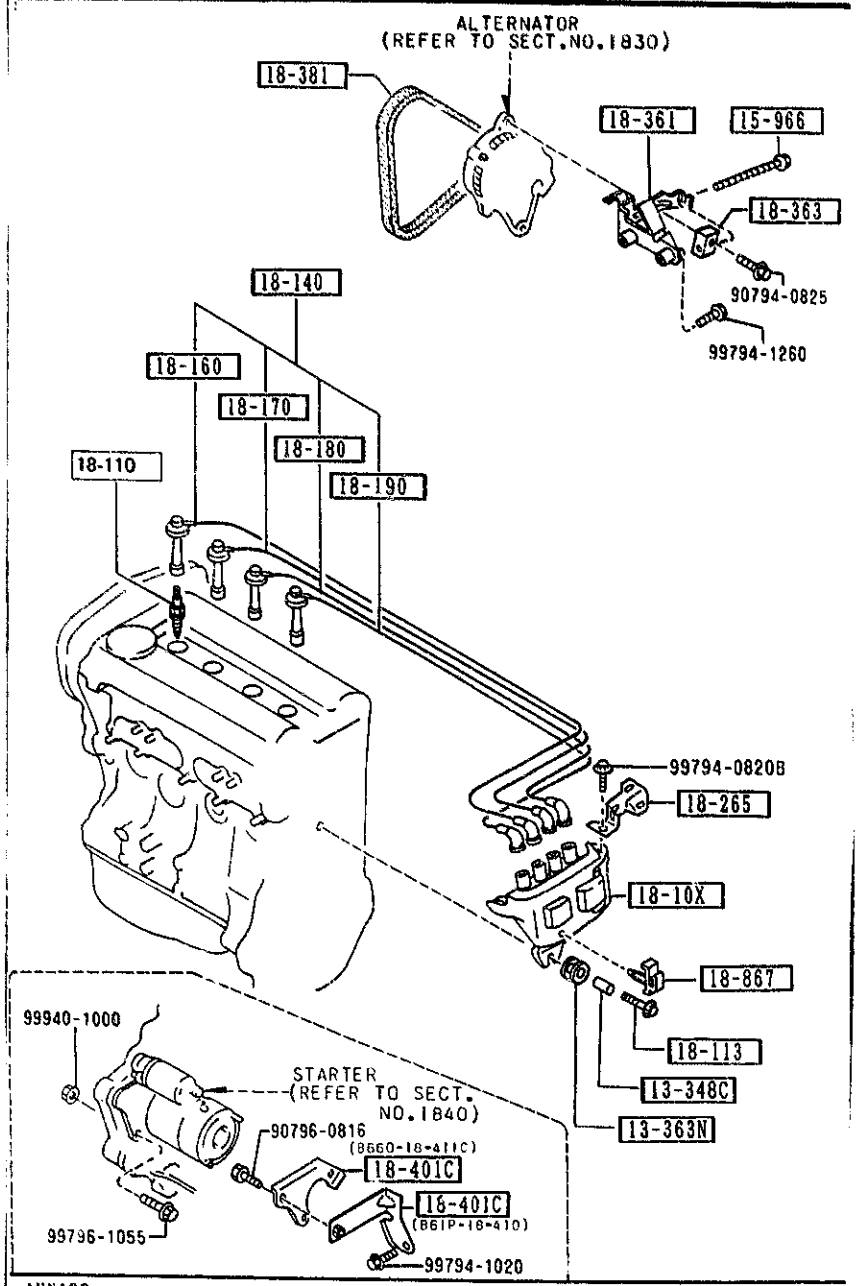

AUNA02

PART NO.	QTY	MODEL/RESTRICTION	MODEL/RESTRICTION	MODEL/RESTRICTION	FROM-TO
13-348C		SPACER			
B61P-13-348	1				
13-363N		RUBBER,MOUNTING			
B61P-13-363A	1				
15-966		BOLT,ADJUST			
FE38-15-966	1				
18-10X		COIL & IGNITER			
B61P-18-10XC	1				-1801
B61P-18-10XD	1				1801-
18-110		PLUG,SPARK			
BP01-18-110	4	BKR5E-11 NGK (OPTION HOT TYPE)			
BP02-18-110	4	K16PR-U11 ND (OPTION HOT TYPE)			
BP03-18-110	4	BKR6E-11 NGK (STD.)			
BP04-18-110	4	K20PR-U11 ND (STD.)			
BP05-18-110	4	BKR7E-11 NGK (OPTION COLD TYPE)			
BP06-18-110	4	K22PR-U11 ND (OPTION COLD TYPE)			
18-113		BOLT			
B61P-18-1A5A	1				
18-140		CORD SET,HI.TENSION			
B61P-18-140B	1				-1129
B61P-18-140C	1				1129-
18-160		CORD NO.1,HI.TENSION			
B61P-18-160B	1				-1129
B61P-18-160C	1				1129-
18-170		CORD NO.2,HI.TENSION			
B61P-18-170B	1				

1129 NA35**-227553
1801 NA35**-235561

CAT. AUNA02-07

1993-12

1800 ENGINE ELECTRICAL SYSTEM

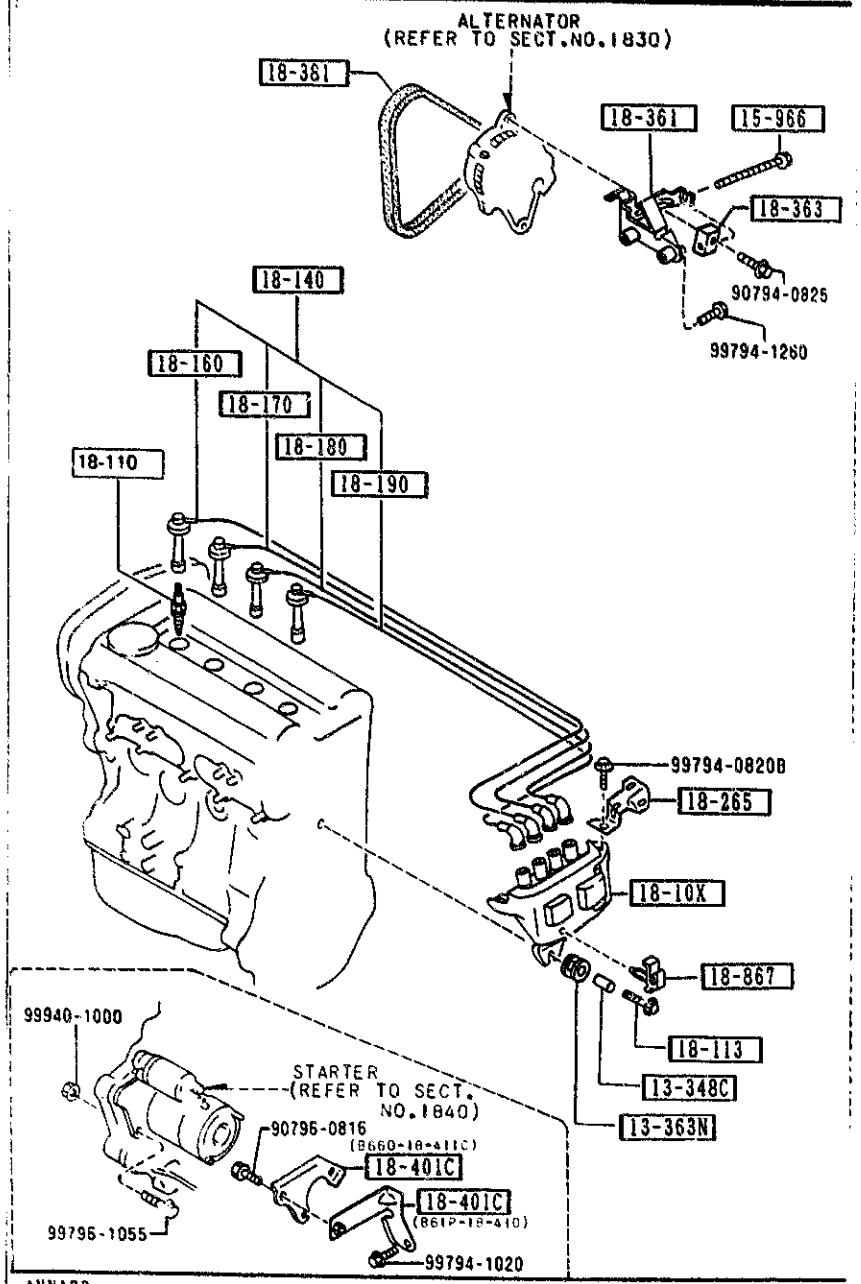

AUNA02

PART NO.	QTY	MODEL/RESTRICTION	MODEL/RESTRICTION	MODEL/RESTRICTION	FROM-TO
18-180		CORD NO.3,HI TENSION			
B61P-18-180B	1				
18-190		CORD NO.4,HI.TENSION			
B61P-18-190B	1				-1129
B61P-18-190C	1				1129-
18-265		CLIP,COUPLER			
B61R-18-266A	1				
18-361		STRAP,ALTERNATOR			
B61P-18-360A	1				
18-363		SPACER,STRAP			
F201-18-363	1				
18-381		BELT'V'			
B6S7-18-381B	1	AUTO-FLEX-3 A-34.7			
18-401C		BRACKET,STARTER			
B61P-18-410	1				
B660-18-411C	1				
18-867		CLIP			
FE30-18-867A	1				

1129 NA35✱✱-227553

CAT. AUNA02-07

1993-12

1830 ALTERNATOR

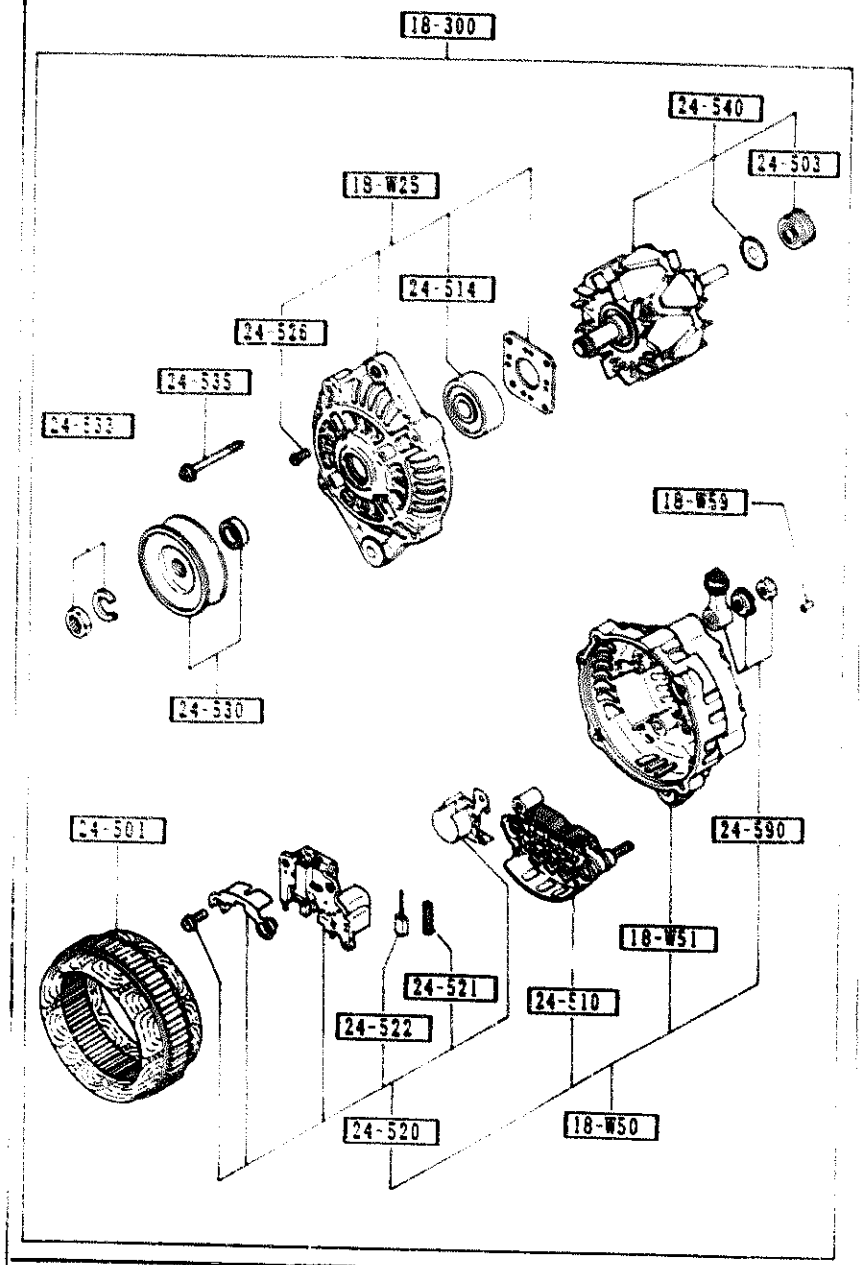

PART NO.	QTY	MODEL RESTRICTION	MODEL RESTRICTION	MODEL RESTRICTION	ITEM
18-W25		COVER,FRONT-ALTERNATOR			
B61P-18-W25	1				-0B19
B64J-18-W25	1				0B19-
18-W50		COVER,REAR-ALTERNATOR			
B61P-18-W50	1	(MT)			-0B19
B64J-18-W50	1	(AT)			-0B19
B61P-18-W50A	1	(MT)			0B19-
B64J-18-W50A	1	(AT)			0B19-
18-W51		COVER,REAR-ALTERNATOR			
B366-18-W51	1				-0B19
B3C7-18-W51	1				0B19-
18-W59		PLUG			
B675-18-W59	1				-0B19
18-300		ALTERNATOR			
B61P-18-300D A (B61P-18-300E)	1				-0B19
B64J-18-300A A (B64J-18-300B)	1				-0B19
B61P-18-300E	1	(MT)			0B19-
B64J-18-300B	1	(AT)			0B19-
24-501		STATOR			
B366-18-W45	1	(AT)			
G608-18-W45	1	(MT)			-0B19
B3C7-18-W45	1	(MT)			0B19-1A01
G608-18-W45	1	(MT)			1A01-
24-503		BEARING,BALL-ALT. REAR			
N336-18-W36	1				
24-510		RECTIFIER			
B366-18-W60	1	(AT)			-0B19
B61P-18-W60	1	(MT)			-0B19
B61R-18-W60	1	(MT)			0B19-
B64J-18-W60	1	(AT)			0B19-

0B19 NA35**-219322
1A01 NA35**-303526

AUNA02

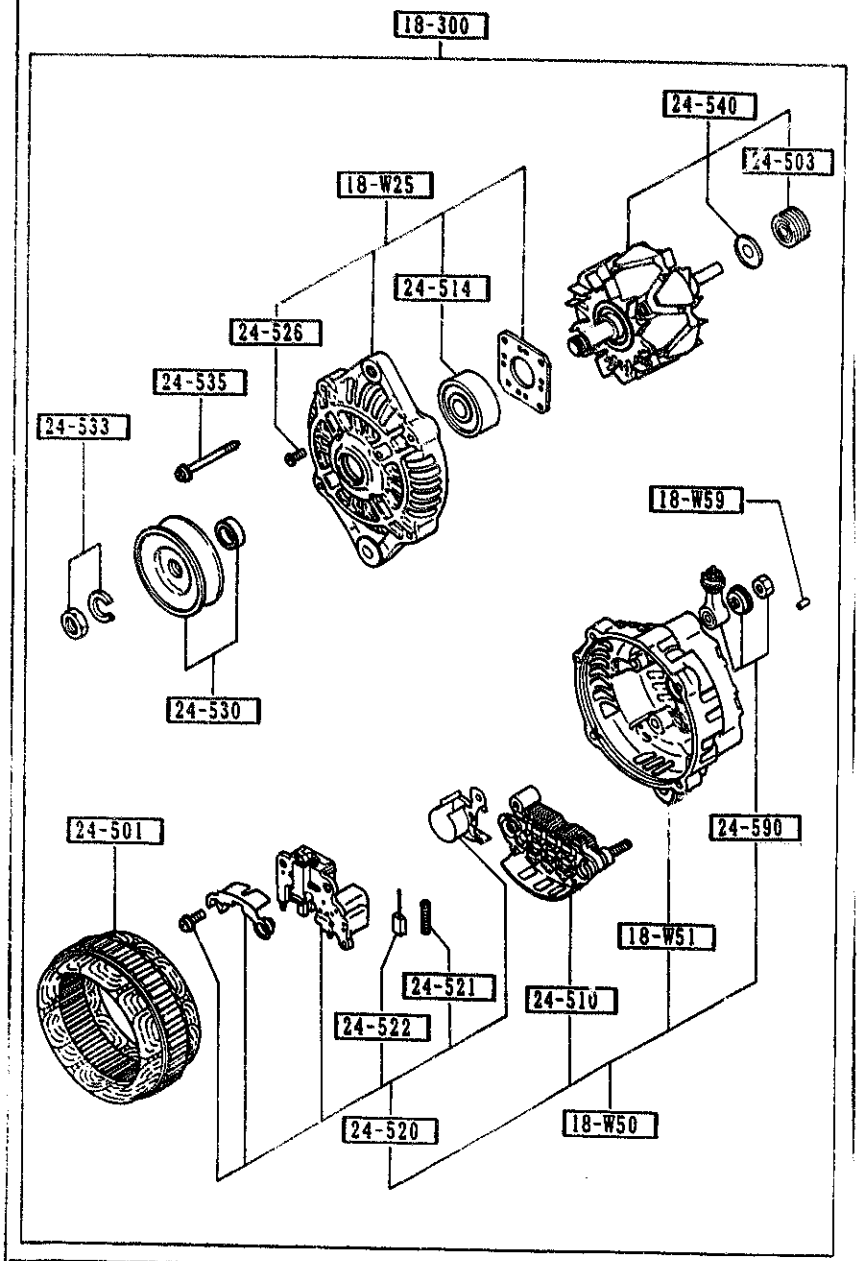

PART NO.	QTY	MODEL/RESTRICTION	MODEL/RESTRICTION	MODEL/RESTRICTION	FROM-TO
24-514		BEARING,BALL-ALT. FRONT			
F611-18-W27	1				-0B19
PN16-18-W27	1				0B19-
24-520		REGULATOR,VOLTAGE			
B61P-18-W70	1				-0B19
B64J-18-W70 A (B64J-18-W70A)	1				0B19-1926
B64J-18-W70A	1				1926-
24-521		SPRING,BRUSH			
8599-24-521	2				-0B19
24-522		BRUSH			
FE2H-18-W77	2				-0B19
B3C7-18-W77	2				0B19-
24-526		SCREW SET			
RF71-18-W26	1				
24-530		PULLEY			
B366-18-W10	1				-0B19
B61P-18-W10	1				0B19-
24-533		NUT SET			
8028-24-533	1				-0B19
B3C7-18-W05	1				0B19-
24-535		SCREW SET			
RF71-18-W20	1				
24-540		ROTOR			
B366-18-W35A	1	(AT)			-0B19
B61P-18-W35	1	(MT)			-0B19
B64J-18-W35 A (B64J-18-W35A)	1				0B19-1921
B61R-18-W35 A (B61R-18-W35A)	1				0B19-1926
B64J-18-W35A	1	(AT)			1921-
B61R-18-W35A	1	(MT)			1926-

0B19 NA35**-219322
1921 NA35**-303526
1926 NA35**-303526

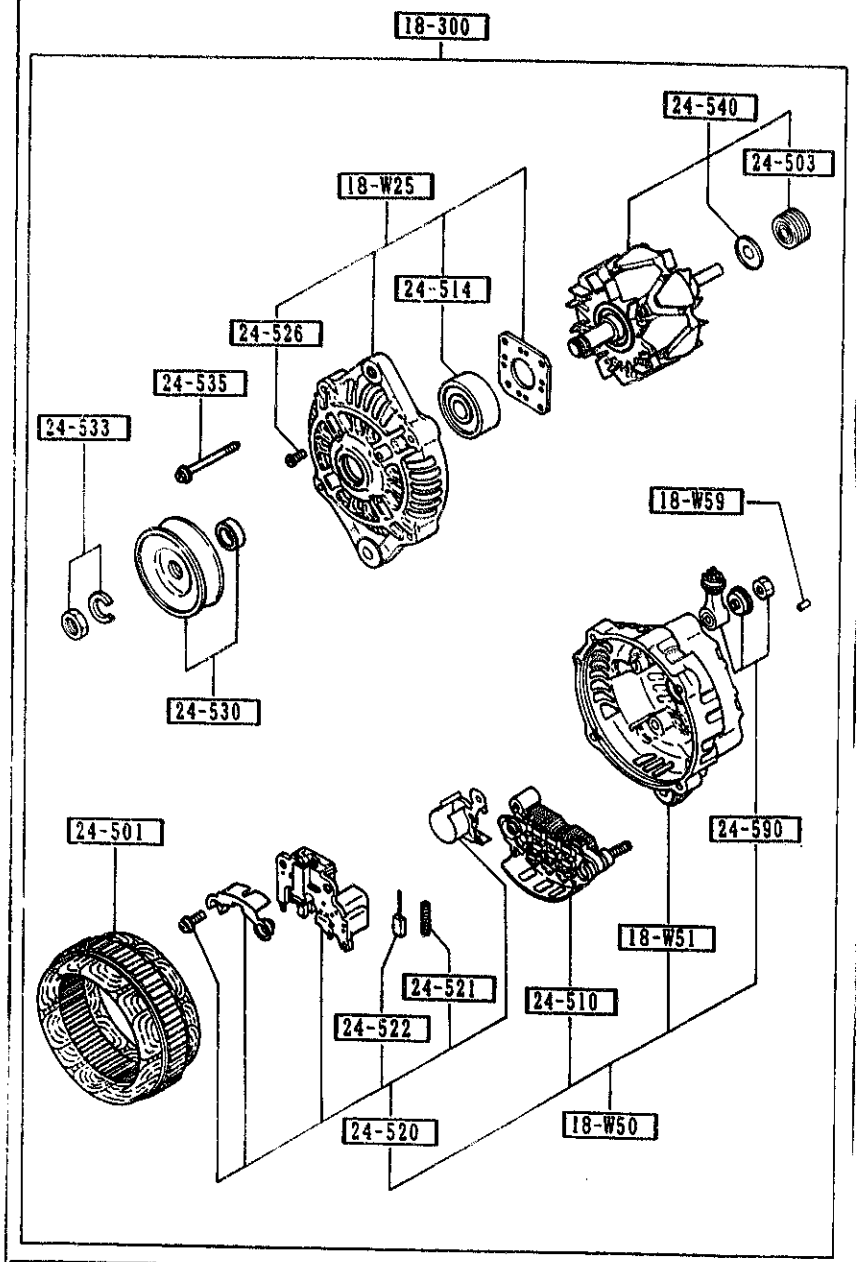

PART NO.	QTY	MODEL/RESTRICTION	MODEL/RESTRICTION	MODEL/RESTRICTION	FROM TO
24-590		TERMINAL SET			
N337-18-W80	1				

1840 -1 STARTER

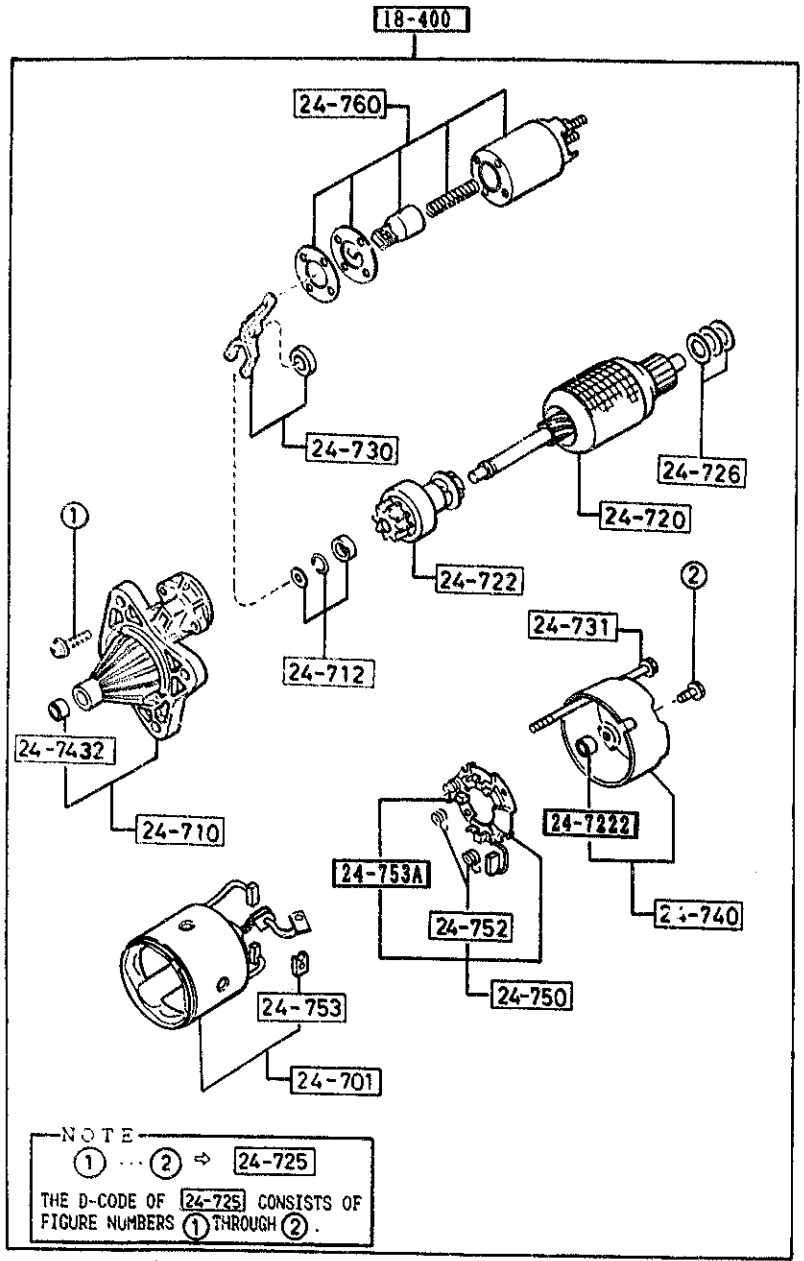

PART NO.	QTY	MODEL/RESTRICTION	MODEL/RESTRICTION	MODEL/RESTRICTION	FROM-TO
18-400		STARTER			
B61R-18-400A	1	NON ASBESTOS			
24-701		YOKE			
B61R-18-X65	1				
24-710		BRACKET,FRONT			
B61R-18-X00	1				
24-712		STOPPER SET			
E356-18-X30	1				
24-720		ARMATURE			
B6S8-18-X60	1	NON ASBESTOS			
24-722		CLUTCH,OVER RUNNING			
B630-18-X45	1				
24-7222		SLEEVE,BEARING-REAR			
E356-18-X81	1				
24-725		SCREW SET			
E356-18-X95	1				
24-726		WASHER SET			
E356-18-X92	1				
24-730		LEVER			
E356-18-X05	1				
24-731		BOLT SET			
B630-18-X90	2				
24-740		BRACKET,REAR			
E356-18-X80	1				
24-7432		SLEEVE,BEARING-FRONT			
F210-16-X01	1				

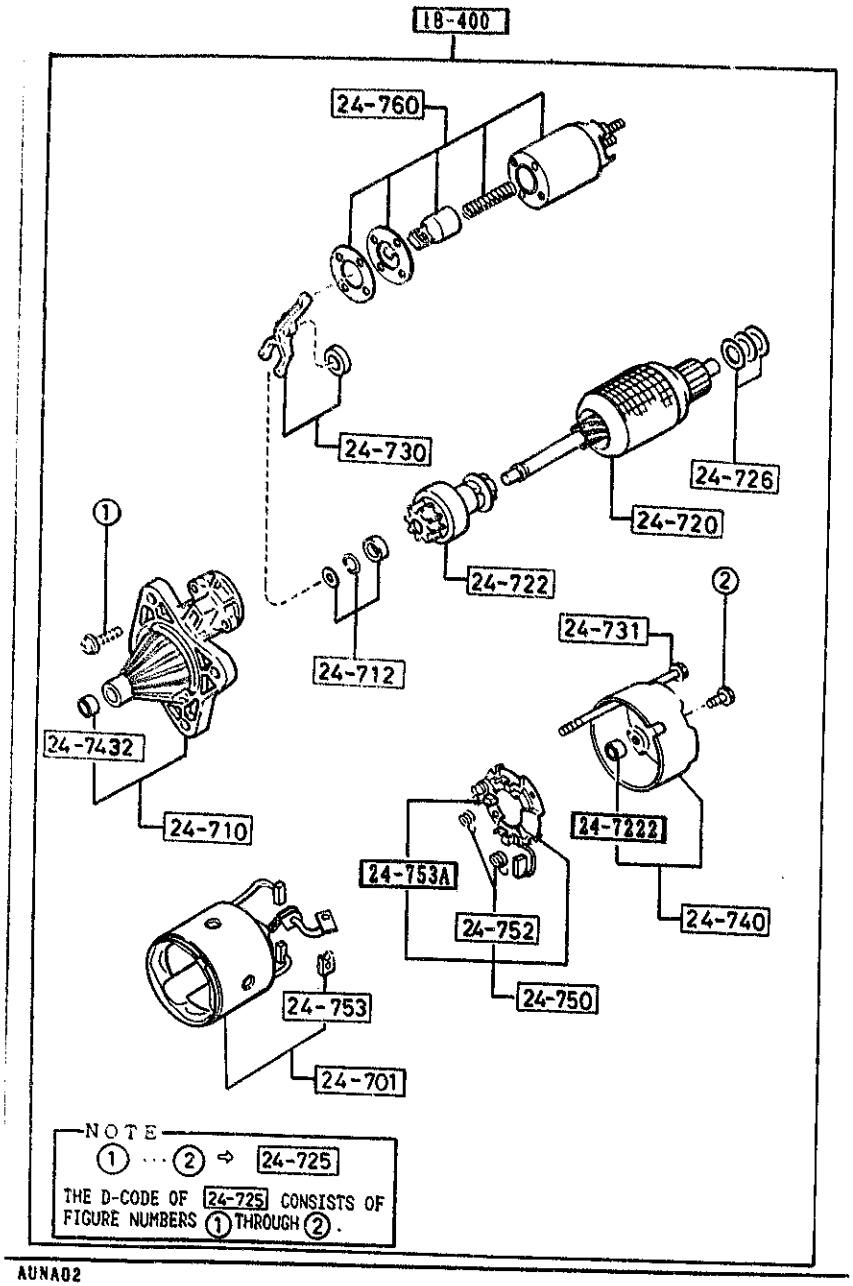

PART NO.	QTY	MODEL/RESTRICTION	MODEL/RESTRICTION	MODEL/RESTRICTION	FROM TO
24-750		HOLDER,BRUSH			
B61R-18-X70	1				
24-752		SPRING,BRUSH			
0222-24-752A	4				
24-753		BRUSH,YOKE			
B630-18-X66	2				
24-753A		BRUSH			
B660-18-X66	2				
24-760		SWITCH			
E356-18-X10	1				

1850 BATTERY

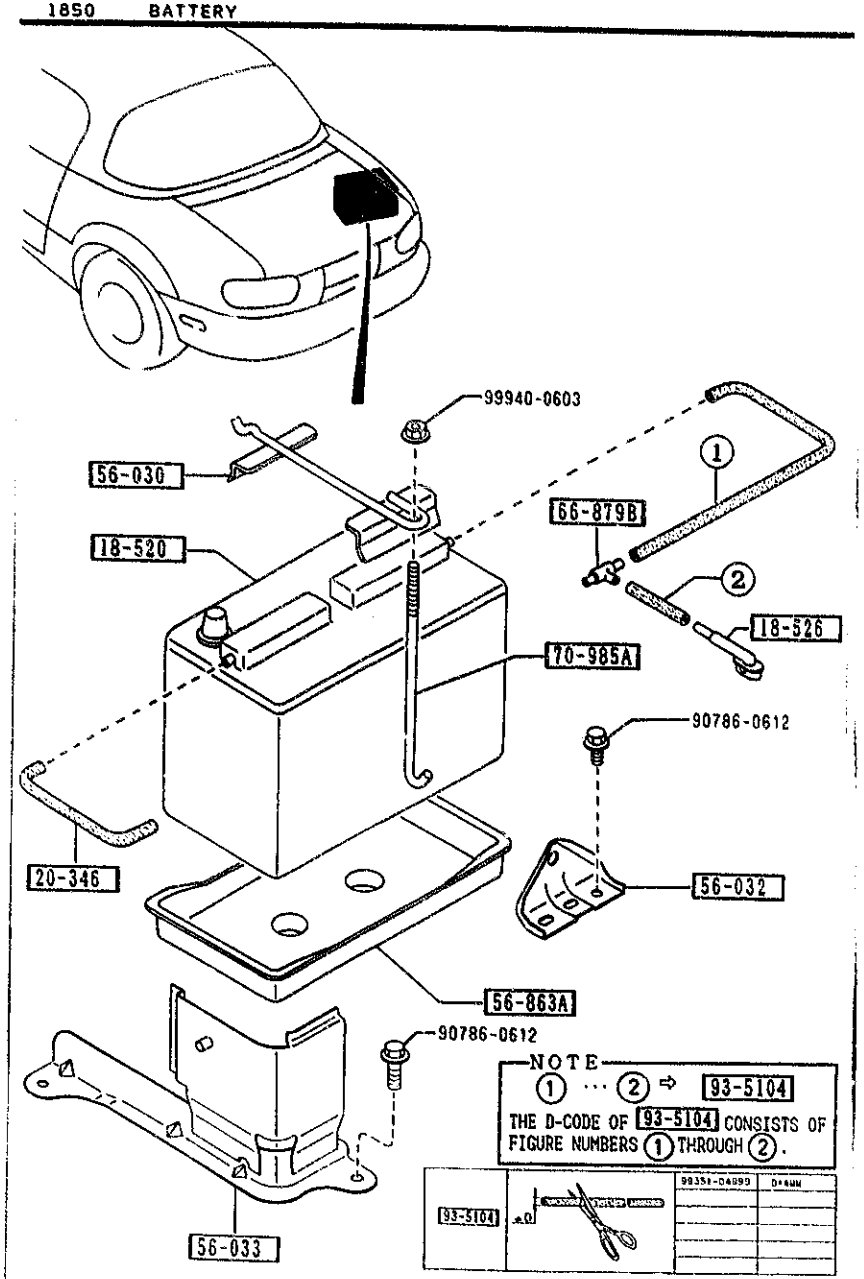

AUNA02

PART NO.	QTY	MODEL/RESTRICTION	MODEL/RESTRICTION	MODEL/RESTRICTION	FROM-TO
18-520		BATTERY			
B61R-18-520B A (B61R-[illegible]-520C)	1	S46A24L(S) PANASONIC			-1801
B61R-18-520C	1	S46A24L(S) PANASONIC			1801-1B01
B6AC-18-520	1	S46A24L(S) PANASONIC			1B01-
18-526		CONNECTOR,TUBE-BATTERY			
B61P-18-526	1				
20-346		TUBE,VACUUM			
B61P-18-524	1				
56-030		CLAMP,BATTERY			
NA01-56-03XA	1				
56-032		BRACKET,BATTERY CLAMP			
NA01-56-032A	1				
56-033		BRACKET,STOPPER-BATTERY			
NA01-56-033A	1				
56-863A		TRAY,BATTERY			
B095-56-032	1				
66-879B		JOINT			
0813-66-879	1				
70-985A		BOLT,CLAMP			
0259-54-292A	1				
93-5104		HOSE			
99351-04999	1				

1801 NA35**-235561
1B01 NA35**-306993

CAT. AUNA02-07

1993-12

1910 TORQUE CONVERTER,OIL PUMP & PIPINGS (AUTOMATIC)

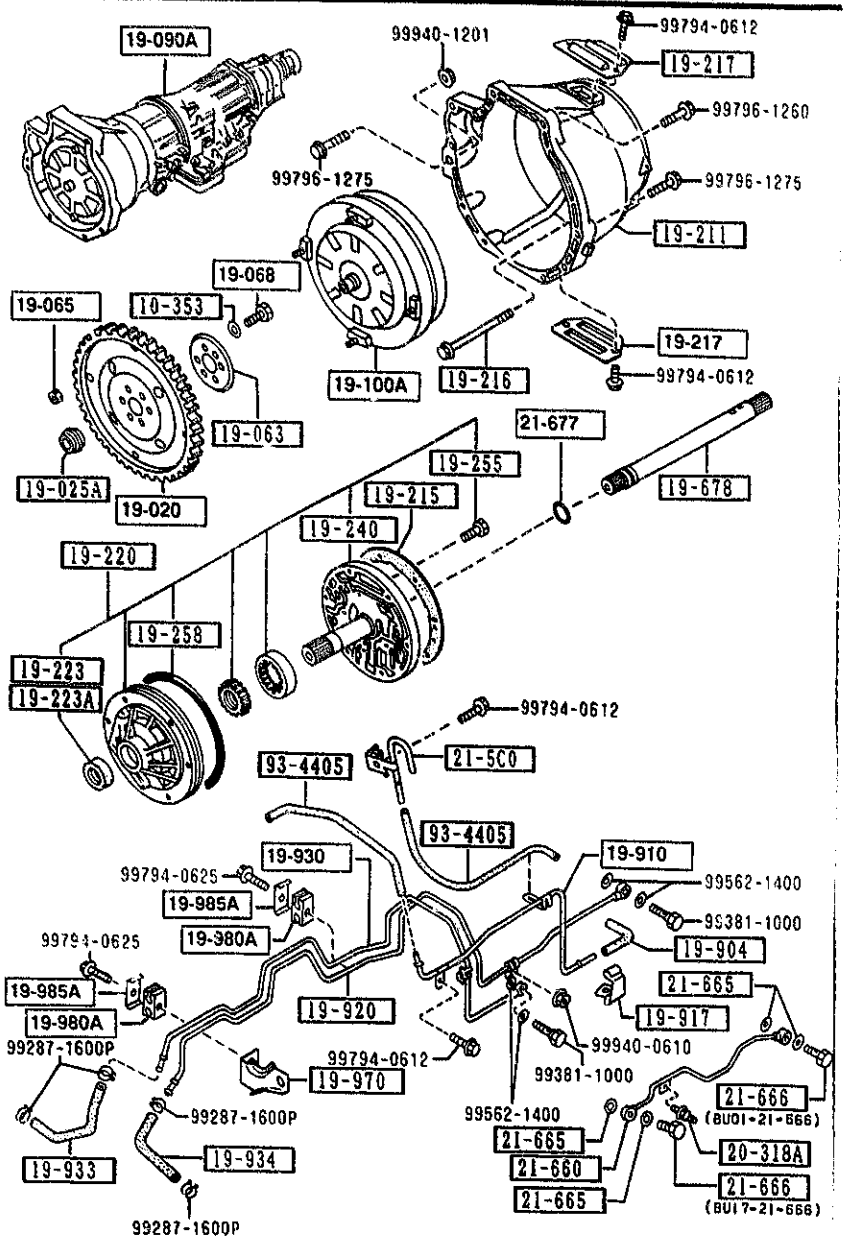

AUNA02

1910 -1 TORQUE CONVERTER,OIL PUMP & PIPINGS (AUTOMATIC)

PART NO.	QTY	MODEL/RESTRICTION	MODEL/RESTRICTION	MODEL/RESTRICTION	FROM-TO
10-353 0290-10-353	6	WASHER,PLAIN			
19-020 BU55-19-020	1	PLATE,DRIVE			
19-025A FU60-19-025	1	ADAPTER,DRIVE PLATE			
19-063 FT31-19-063	1	PLATE,BACKING			
19-065 FU51-19-065	4	NUT			
19-068 FT31-19-064	6	BOLT,LOCK			
19-090A BUY2-19-090A	1	T/MISSION CPT.			
19-100A BU55-19-100	1	CONVERTER,TORQUE			
19-211 BU55-19-211	1	HOUSING,CONVERTER			
19-215 BU01-19-215	1	GASKET,OIL PUMP ASBESTOS			
19-216 BU01-19-216	6	BOLT			
19-217 BU55-19-217	2	COVER,BLIND			
19-220 BU55-19-220 AN(BU55-19-220A)	1	PUMP,OIL			-1A01
BU55-19-220A	1				1A01-

1A01 NA35**-303925

CAT. AUNA02-07

1993-12

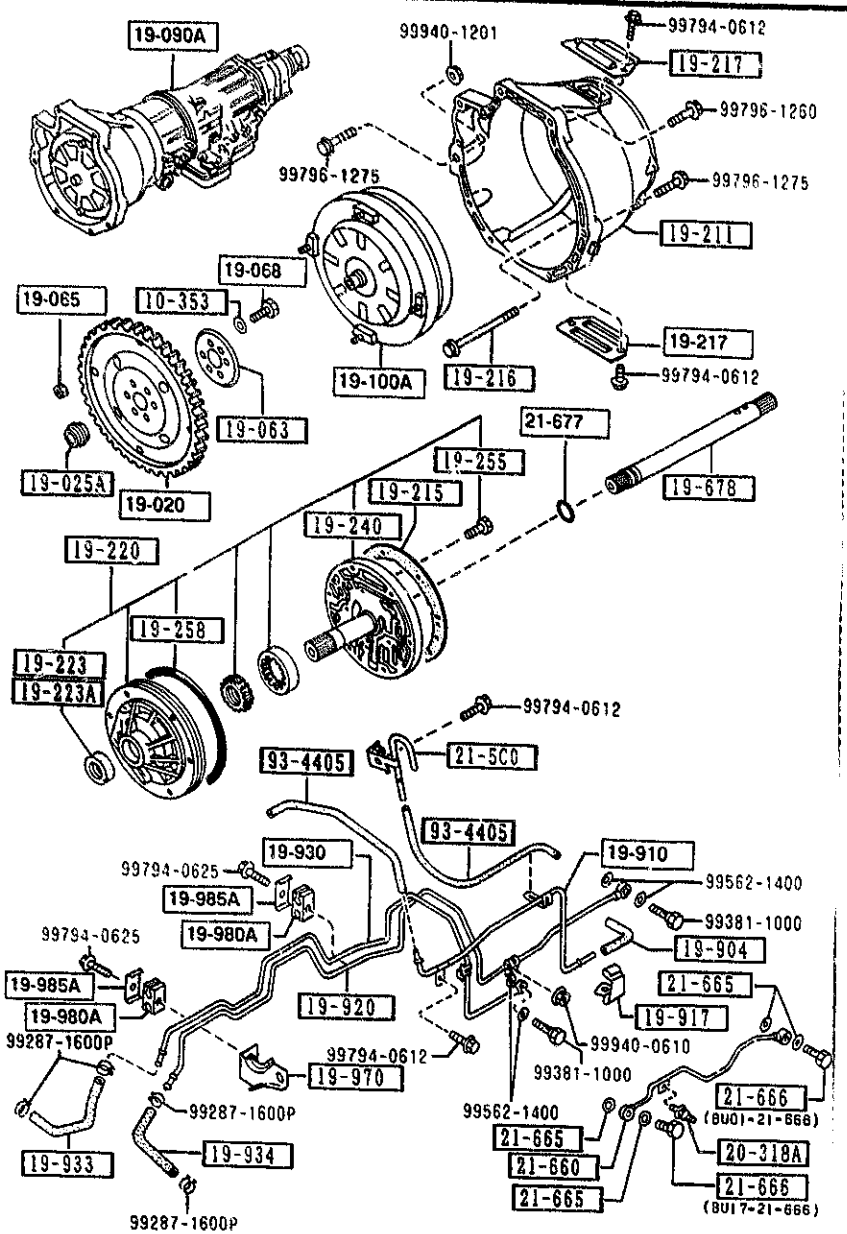

AUNA02

PART NO.	QTY	MODEL/RESTRICTION	MODEL/RESTRICTION	MODEL/RESTRICTION	FROM-TO
19-223		SEAL,OIL			
*BU55-19-223	1	JATCO			
19-223A		SEAL,OIL			
0338-19-223A	1	NOK			
19-240		COVER,OIL PUMP			
BU55-19-240	1				-1A01
AN(BU55-19-240A)					
BU55-19-240A	1				1A01-
19-255		BOLT			
0338-19-255	5				
19-258		SEAL,CUT RING			
0338-19-258	1				
19-678		SHAFT,INPUT			
BU55-21-678	1				
19-904		HOSE,VACUUM			
0338-19-904A	1				
19-910		PIPE,VACUUM			
BU55-19-910A	1				
19-917		CLIP			
BU17-19-917	1				
19-920		PIPE,OIL			
BU55-19-920C	1				
19-930		PIPE,OIL			
BU55-19-930C	1				
19-933		HOSE,OIL			
BU55-19-933A	1				
19-934		HOSE,OIL			
BU55-19-934A	1				

1A01 NA35**-303925

CAT. AUNA02-07

1993-12

1910 TORQUE CONVERTER,OIL PUMP & PIPINGS (AUTOMATIC)

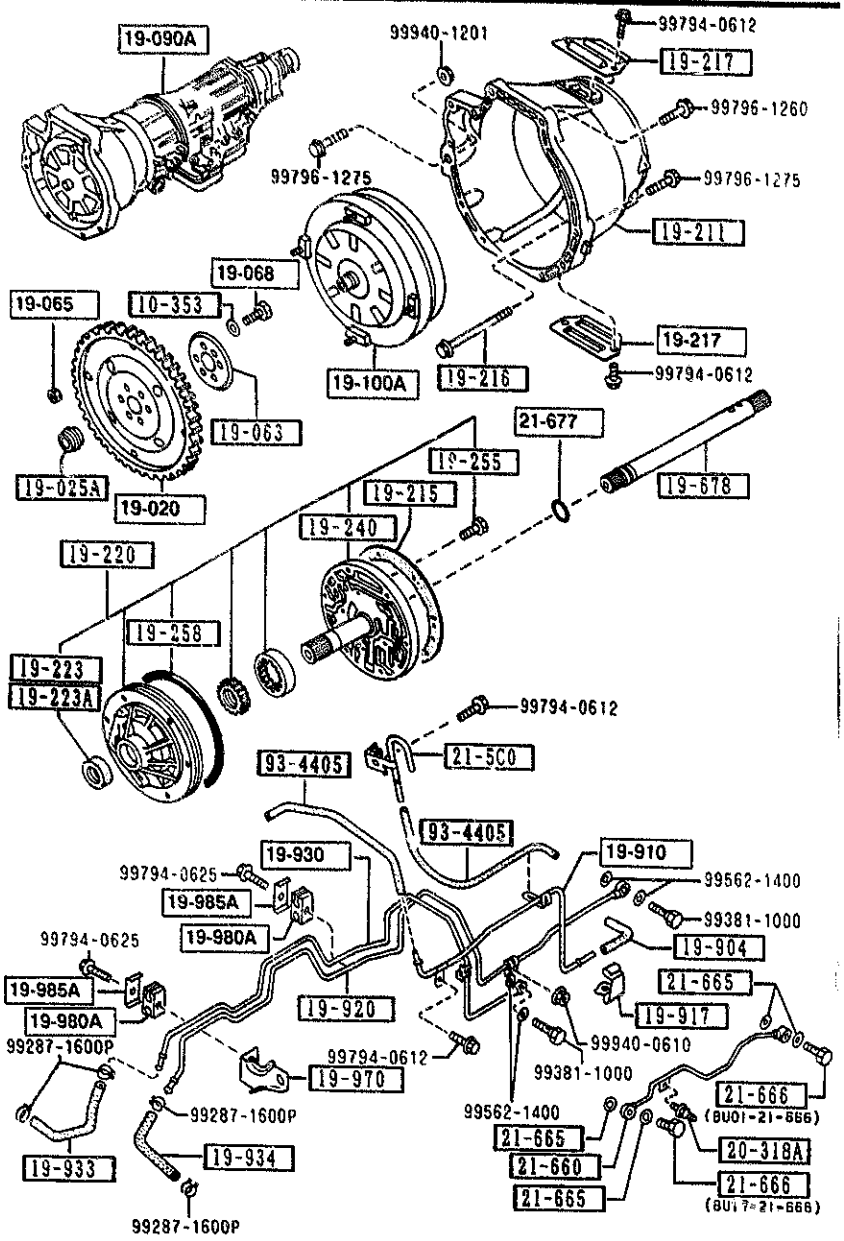

AUNA02

PART NO.	QTY	MODEL/RESTRICTION	MODEL/RESTRICTION	MODEL/RESTRICTION	FROM-TO
19-970		BRACKET			
BU55-19-970A	1				
19-980A		SUPPORT,OIL PIPE			
BU29-19-980	2				
19-985A		CLIP,OIL PIPE			
BU29-19-985	2				
20-318A		BOLT			
BU27-19-838	1				
21-5C0		BREATHER			
BU55-21-5C0A	1				
21-660		TUBE,GOVERNOR			
BU55-21-660	1				
21-665		WASHER,SEAL			
BU01-21-665	4				
21-666		BOLT,CONNECTOR			
BU01-21-666	1				
BU17-21-666	1				
21-677		RING,'O'			
BU01-21-677	1				
93-4405		HOSE			
99344-05150	1				

CAT. AUNA02-07

1993-12

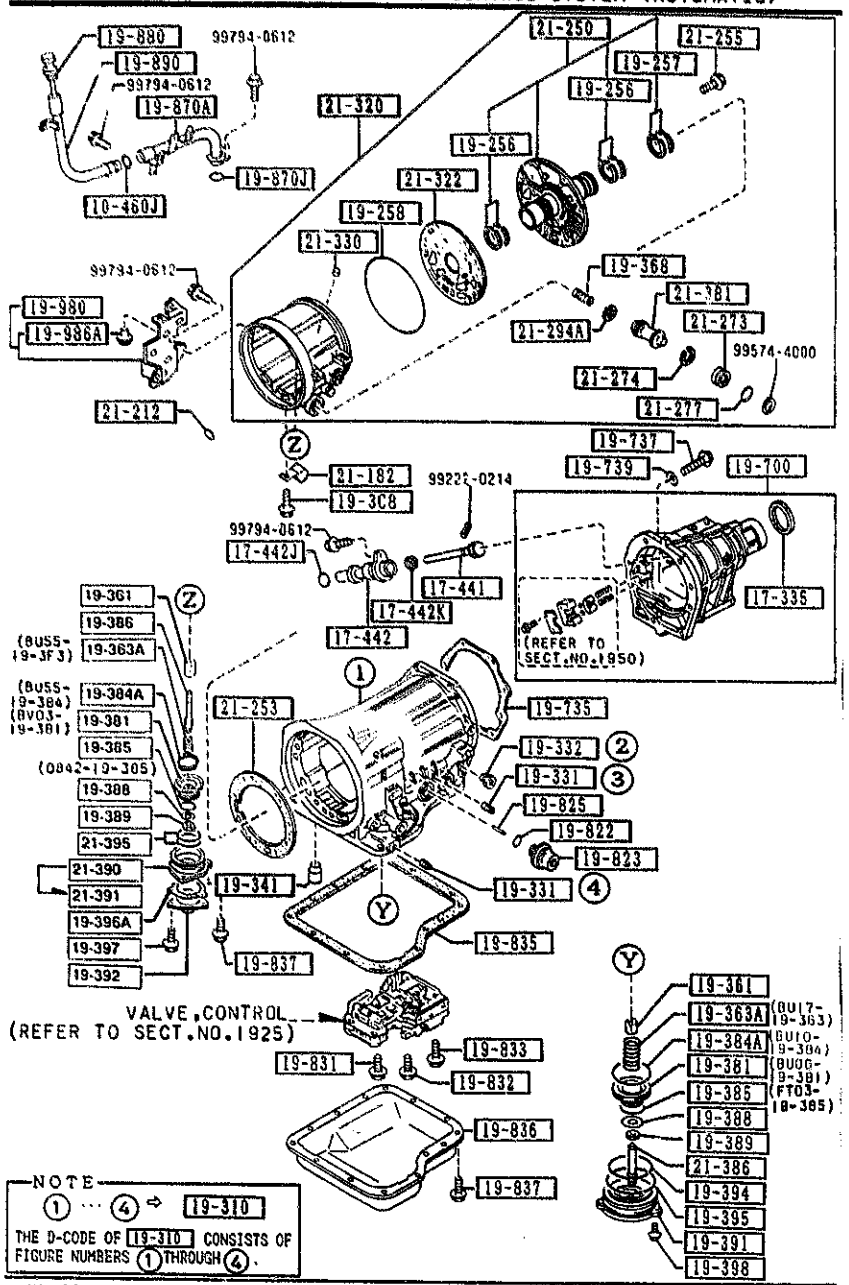

AUNA02

PART NO.	QTY	MODEL/RESTRICTION	MODEL/RESTRICTION	MODEL/RESTRICTION	FROM-TO
10-460J 99541-01201	1	RING,'O'			
17-335 M507-17-335 A (M507-17-335A)	1	SEAL,OIL			-2511
M507-17-335A	1				2511-
17-441 BU55-17-441	1	GEAR,DRIVEN			
17-442 BU55-17-442	1	SLEEVE,SPEEDOMETER			
17-442J 1011-17-443	1	RING,'O'			
17-442K 99586-08166	1	SEAL,OIL			
19-256 BU01-19-256	4	RING,SEAL			
19-257 BU01-19-257	2	RING,SEAL			
19-258 0338-19-258	1	SEAL,CUT RING			
19-3C8 BU55-19-3C8	1	BOLT,BAFFLE PLATE			
19-310 BU55-19-310A	1	CASE,T/MISSION			
19-331 BV11-19-3C4	1	PLUG,SQUARE HEAD			-1301
0338-19-331A	1				1301-
19-332 BU01-19-332A	1	CONNECTOR,STRAIGHT			

1301 NA35**-231464
2511 NA35**-327063

CAT. AUNA02-07

1993-12

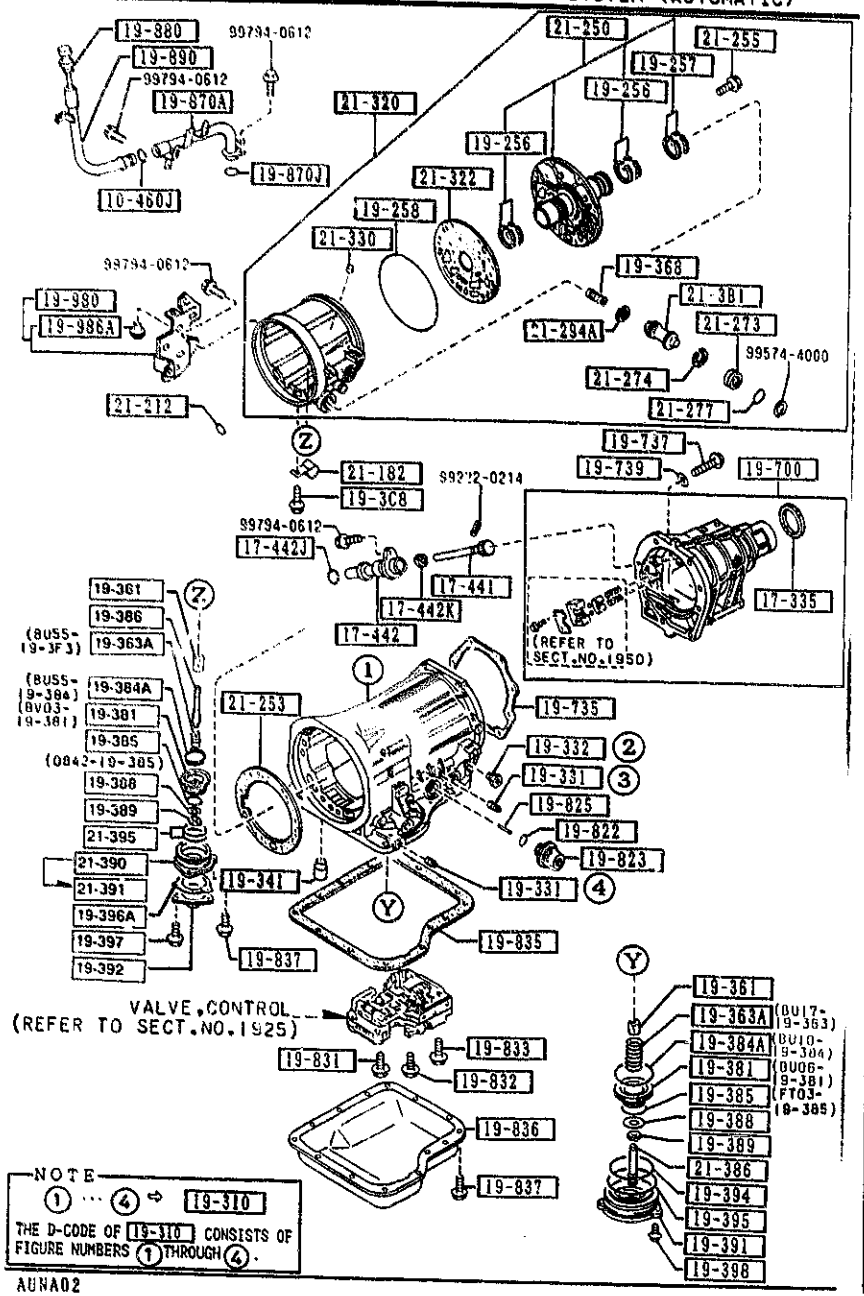

AUNA02

PART NO.	Q'TY	MODEL/RESTRICTION	MODEL/RESTRICTION	MODEL/RESTRICTION	FROM TO
19-341		BOLT,ANCHOR END			
※0338-19-341	1				
19-361		STRUT,BAND			
0338-19-361B	2				
19-363A		SPRING,PISTON RETURN			
BU55-19-3F3	1				
BU17-19-363	1				
19-368		SPRING,CUSHION-PSTN. STEM			
BU20-19-368	1				
19-381		PISTON,BAND SERVO			
BU06-19-381	1				
BV03-19-381	1				
19-384A		SEAL,PISTON			
BU10-19-384	1				
BU55-19-384	1				
19-385		SEAL,PISTON			
FT03-19-385	1	D=44MM			
0842-19-385	1	D=36MM			
19-386		STEM,PISTON			
0338-19-386A	1				
19-388		WASHER,PLAIN			
0338-19-388A	2				
19-389		NUT			
0338-19-389	2				
19-391		RETAINER,SERVO			
BU06-19-391	1				
19-392		COVER,SERVO			
1758-19-392A	1				

1920 TRANSMISSION CASE & MAIN CONTROL SYSTEM (AUTOMATIC)

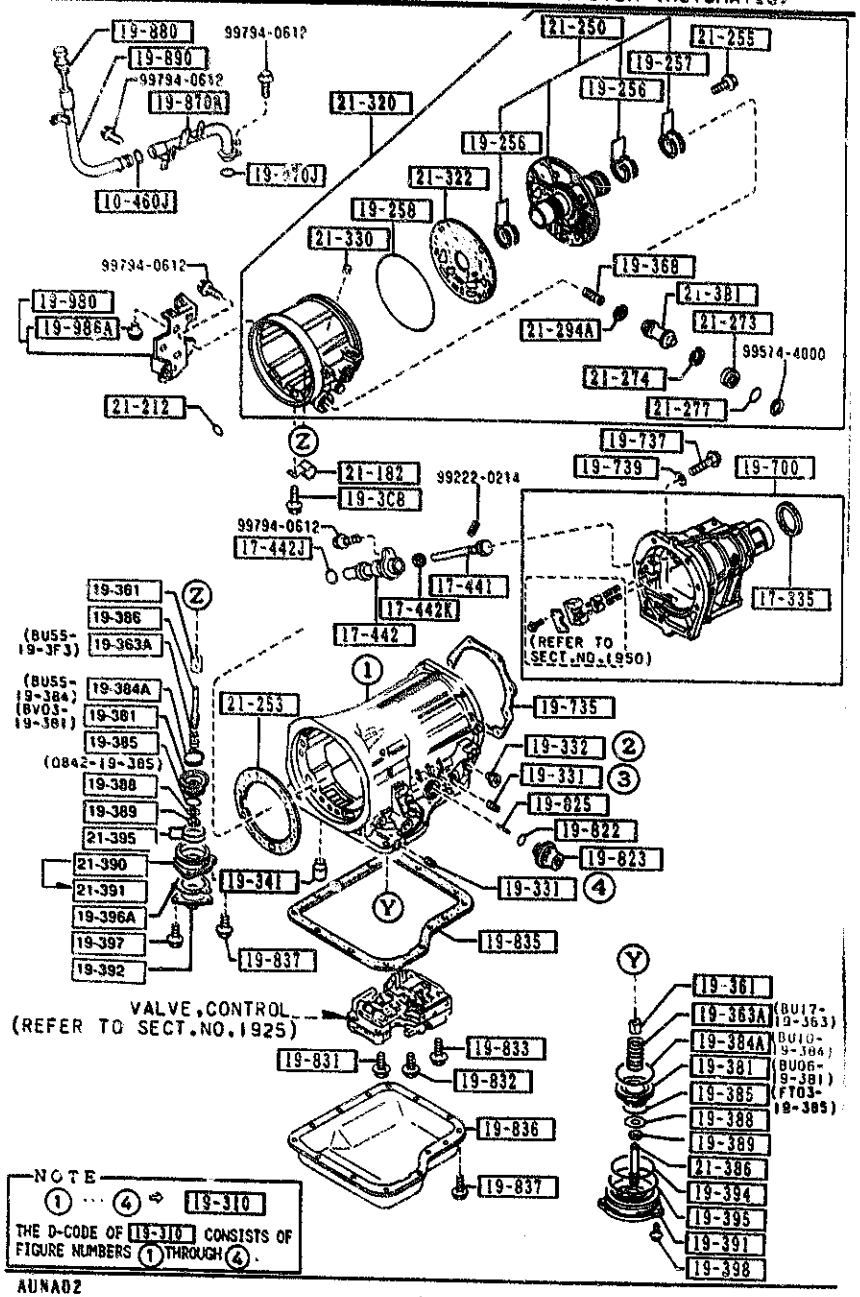

AUNA02

PART NO.	QTY	MODEL/RESTRICTION	MODEL/RESTRICTION	MODEL/RESTRICTION	FROM-TO
19-394 0842-19-394	1	SEAL,LATHE CUT			
19-395 0338-19-395	1	RING,'O'			
19-396A 1758-19-396A	1	GASKET ASBESTOS			
19-397 1758-19-397	3	BOLT			
19-398 0338-19-398	3	BOLT			
19-700 BUY2-19-7A0	1	HOUSING,EXTENSION			
19-735 0338-19-735	1	GASKET,EXTENSION ASBESTOS			
19-737 0338-19-737	8	BOLT			
19-739 0338-19-739	8	WASHER,PLAIN			
19-822 0338-19-822	1	SEAL,'O'RING			
19-823 BU55-19-823	1	DIAPHRAGM,VACUUM			
19-825 BU55-19-825	1	ROD,DIAPHRAGM L=29.75MM			
0338-19-825	1	L=30MM			
0338-19-826	1	L=31MM			

1920 TRANSMISSION CASE & MAIN CONTROL SYSTEM (AUTOMATIC)

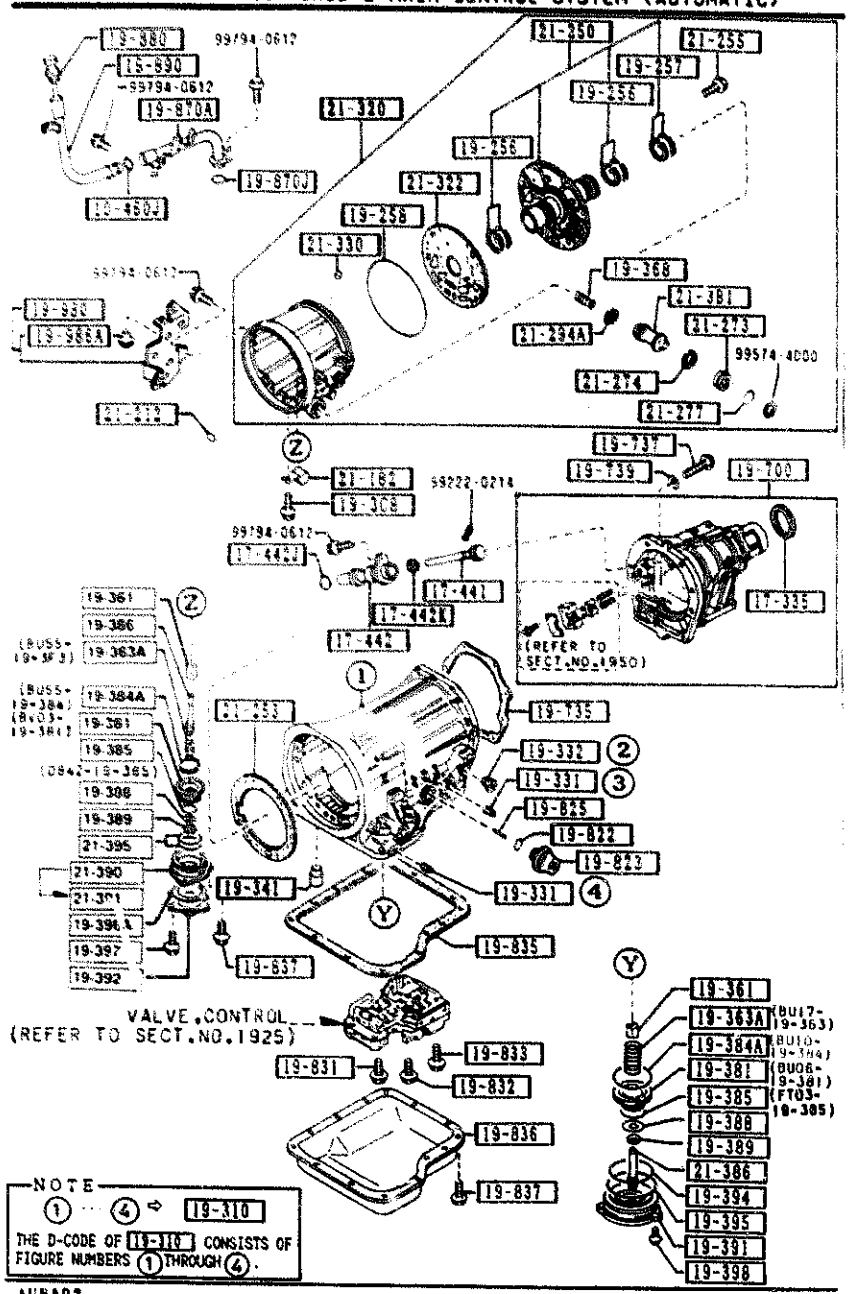

AUNA02

PART NO.	Q'TY	MODEL/RESTRICTION	MODEL/RESTRICTION	MODEL RESTRICTION	FROM TO
CONT'D					
0338-19-827	1	L=30.5MM			
0338-19-828	1	L=29MM			
0338-19-829	1	L=29.5MM			
19-831		BOLT,CONTROL VALVE			
0338-19-831	2				
19-832		BOLT,CONTROL VALVE			
0338-19-832	2				
19-833		BOLT,CONTROL VALVE			
0338-19-833	3				
19-835		GASKET,OIL PAN			
0338-19-835B	1	ASBESTOS			
19-836		PAN,OIL			
0338-19-836A	1				
19-837		BOLT,OIL PAN			
0338-19-837	17				
19-870A		TUBE,FILLER			
8U55-19-870	1				
19-870J		RING,'O'			
99541-01601	1				
19-880		GAUGE,OIL LEVEL			
8U17-19-880B	1				
19-890		TUBE,OIL FILTER-UPPER			
8U55-19-890	1				
19-980		BRACKET			
8U55-19-980A	1				
19-986A		BUSH,RUBBER			

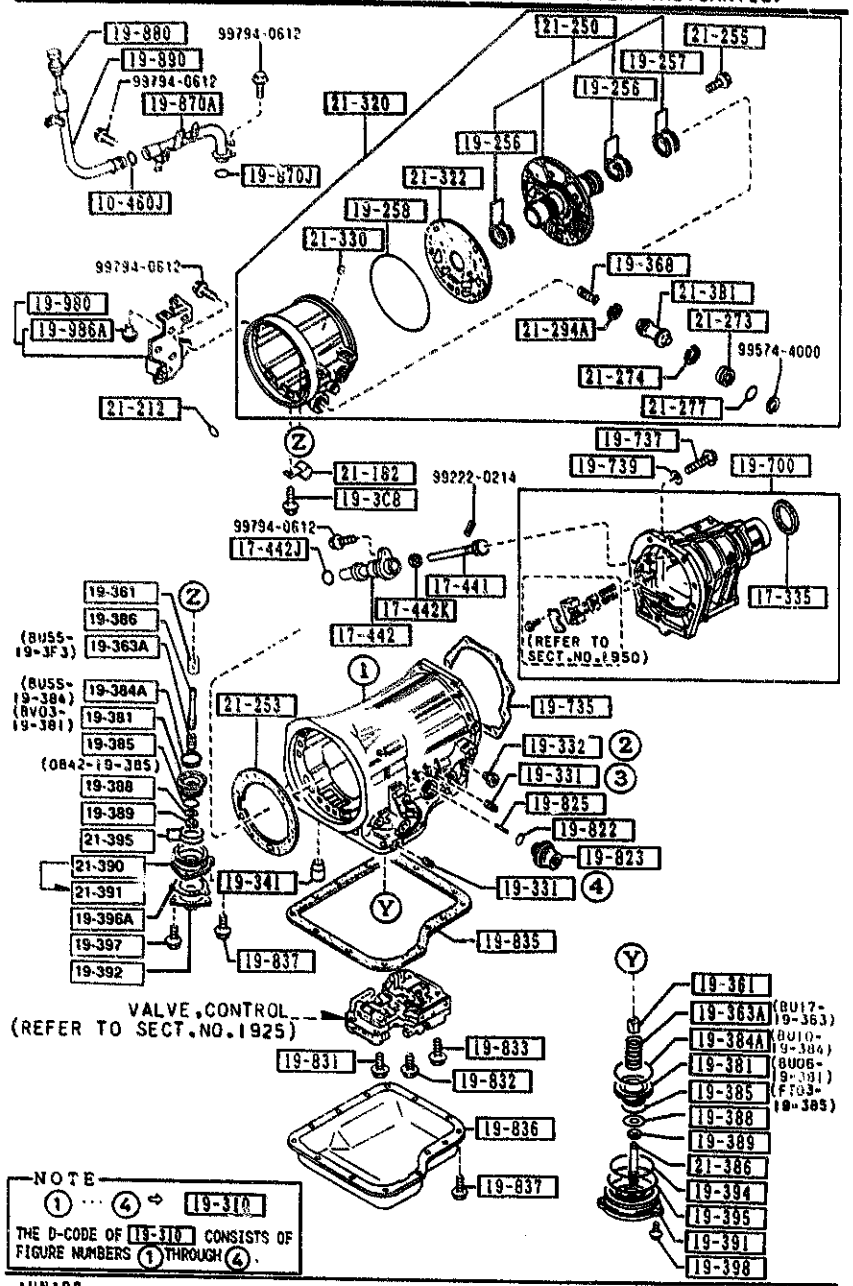

AUNA02

PART NO.	QTY	MODEL/RESTRICTION	MODEL/RESTRICTION	MODEL/RESTRICTION	FROM TO
CONT'D					
BV01-19-986	1				
21-182		BRACKET			
BU55-21-182	1				
21-212		RING,'O'			
BU01-21-212	2				
21-250		SUPPORT,DRUM			
BU55-21-250	1				
21-253		GASKET,DRUM SUPPORT			
BU01-21-253	1	ASBESTOS			
21-255		BOLT			
BU01-21-255	5				
21-273		PLUG,ACCUMULATOR			
BU01-21-273	1				
21-274		SEAL,'O'RING			
BU01-21-274	1				
21-277		RING,'O'			
BU01-21-277	1				
21-294A		RING,SEAL			
BU55-21-293	1				
21-381		PISTON,ACCUMULATOR			
BU55-21-381	1				
21-320		CASE,OVER DRIVE			
BU55-21-320	1				
21-322		GASKET,O/DRIVE CASE			
BU01-21-322	1				
21-330		VALVE,ONE WAY			
BV01-21-330	1				

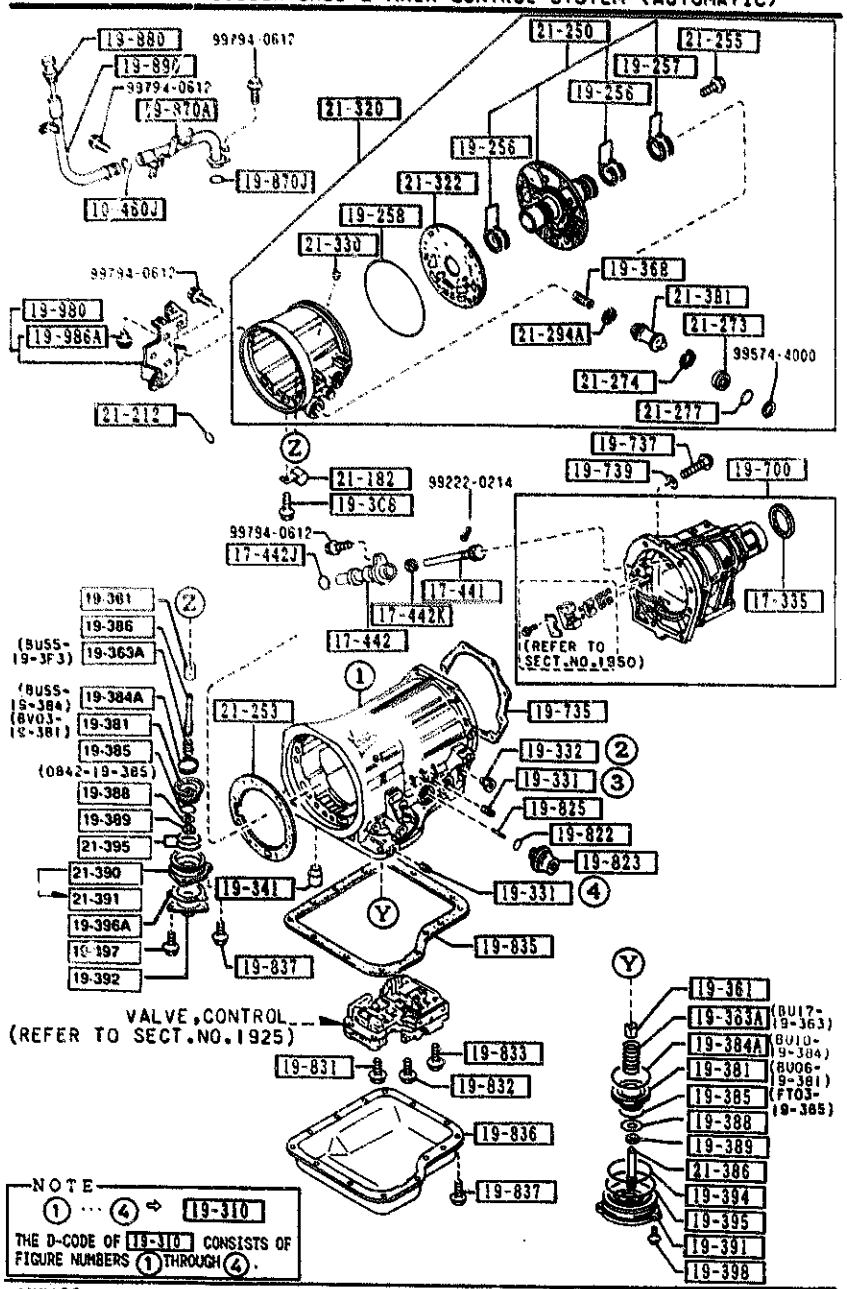

AUNA02

PART NO.	QTY	MODEL/RESTRICTION	MODEL/RESTRICTION	MODEL/RESTRICTION	FROM TO
21-386		STEM,PISTON BAND			
BU01-21-386	1				
21-390		SERVO,OVER DRIVE			
BU20-21-390	1				-0801
21-391		RETAINER,SERVO			
BV02-21-391	1				0801-
21-395		RING,'O'			
BU01-21-395	2				

0801 NA35✱✱-217311

CAT. AUNA02-07

1593-12

1925 CONTROL VALVE (AUTOMATIC)

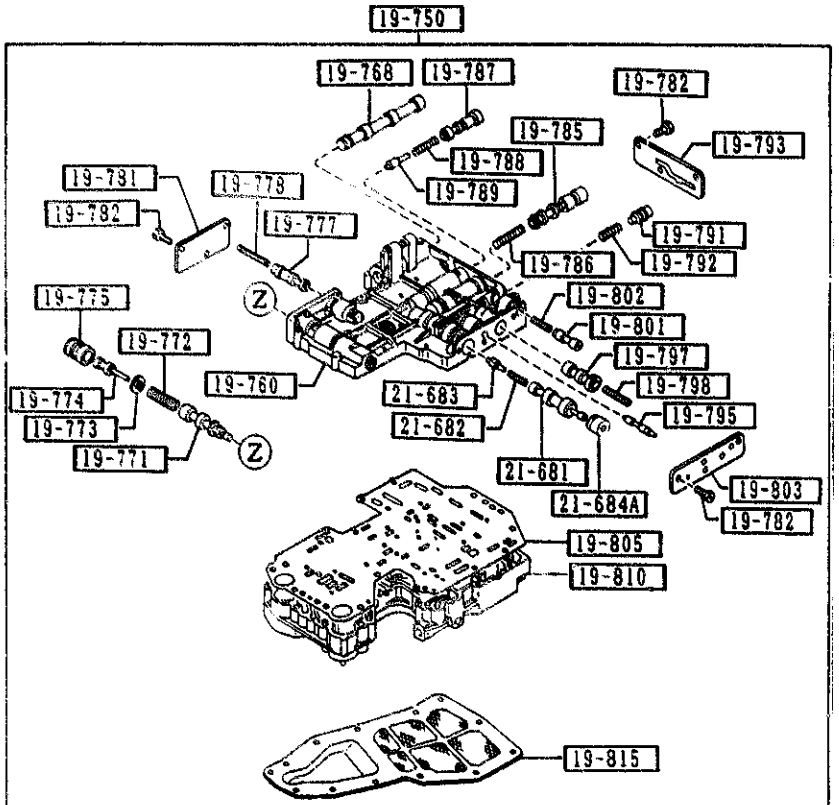

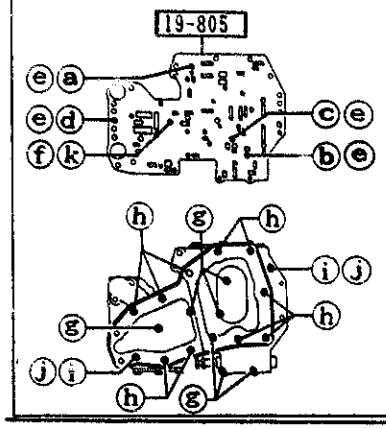

a	D	19-8A4	D=1.1MM
b		19-881	D=2.0MM
c		19-807	D=1.5MM (BU01-19-807)
d		19-807	D=1.8MM (BU17-19-807)
e	D	19-808	D=4.77MM, L=15.5MM
f		19-814	D=5.6MM, L=26.8MM
g	L	19-816	M5, L=25MM
h		19-817	M5, L=40MM
i		19-818	M6, L=57MM
j		19-819	
k		99611-2000	

PART NO.	QTY	MODEL/RESTRICTION	MODEL/RESTRICTION	MODEL/RESTRICTION	FROM-TO
19-750 BU55-19-750	1	VALVE,CONTROL			
19-760 BU55-19-760	1	BODY,CONTROL VALVE-UP			
19-768 0338-19-768	1	VALVE,MANUAL			
19-771 BU01-19-771	1	VALVE,REGULATOR			
19-772 0338-19-772	1	SPRING,REGULATOR			
19-773 0338-19-773	1	SEAT,REGULATOR SPRING			
19-774 BU55-19-774	1	PLUG,REGULATOR			
19-775 BU55-19-775	1	SLEEVE,REGULATOR PLUG			
19-777 0338-19-777	1	VALVE,SECOND LOCK			
19-778 0338-19-778	1	SPRING,SECOND LOCK			
19-781 1758-19-781	1	PLATE,SIDE'D'			
19-782 0338-19-782	9	SCREW			
19-785 BU55-19-785	1	VALVE,1-2 SHIFT			
19-786 BU55-19-786	1	SPRING,1-2 SHIFT			

1925 CONTROL VALVE (AUTOMATIC)

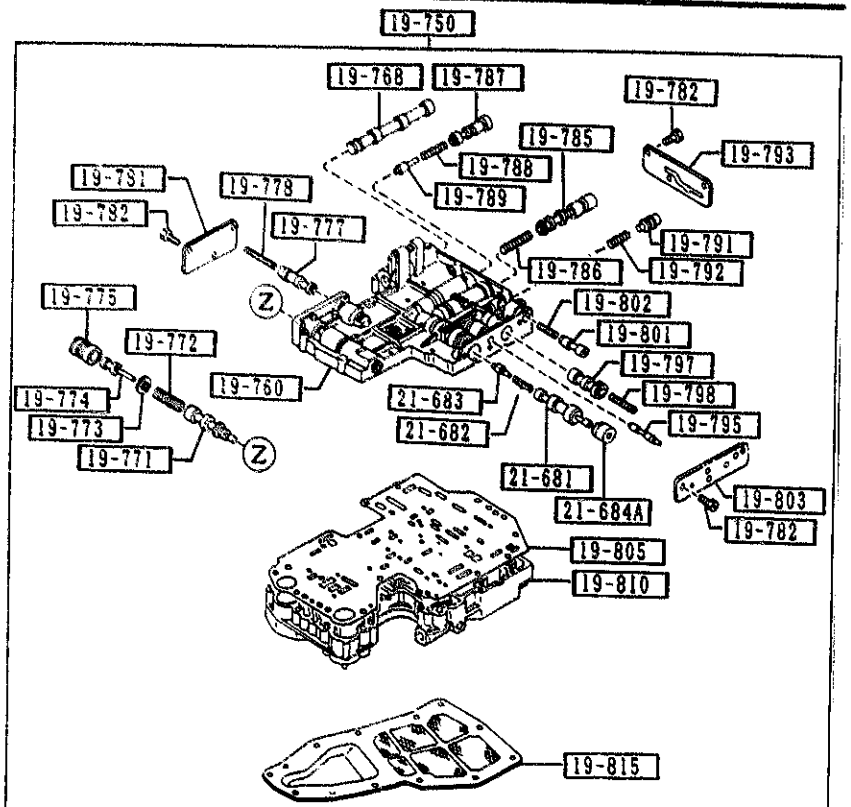

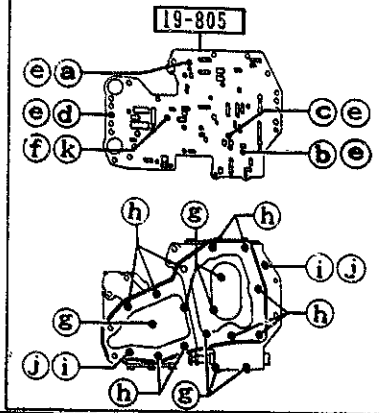

a	D	19-8A4	D=1.1MM
b		19-8B1	D=2.0MM
c		19-807	D=1.5MM (BU01-19-807)
d		19-807	D=1.8MM (BU17-19-807)
e	D	19-808	D=4.77MM,L=15.5MM
f		19-814	D=5.6MM,L=26.8MM
g	L	19-816	M5,L=25MM
h		19-817	M5,L=40MM
i		19-818	M6,L=57MM
j		19-819	
k		99611-2000	

AUNA02

PART NO.	QTY	MODEL/RESTRICTION	MODEL/RESTRICTION	MODEL/RESTRICTION	FROM-TO
19-787 / BU55-19-787	1	VALVE,2-3 SHIFT			
19-788 / FT21-19-788	1	SPRING,2-3 SHIFT			
19-789 / BU17-19-789	1	PLUG,2-3 SHIFT			
19-791 / FT27-19-791A	1	VALVE,MODIFIER			
19-792 / FT37-19-792	1	SPRING,MODIFIER			
19-793 / 0338-19-793A	1	PLATE,SIDE'A'			
19-795 / 0338-19-795B	1	VALVE,THROTTLE			
19-797 / 0338-19-797	1	VALVE,THROTTLE BACK-UP			
19-798 / 0338-19-798	1	SPRING,THROTTLE BACK-UP			
19-8A4 / BV01-19-8A4	1	VALVE,ORIFICE CHECK			
19-8B1 / BV01-19-8B1	1	VALVE,ORIFICE CHECK			
19-801 / 0338-19-801	1	VALVE,DOWN SHIFT			
19-802 / 0338-19-802	1	SPRING,DOWN SHIFT			
19-803 / BU01-19-803A	1	PLATE,SIDE'B'			

CAT. AUNA02-07

1993-12

1925 CONTROL VALVE (AUTOMATIC)

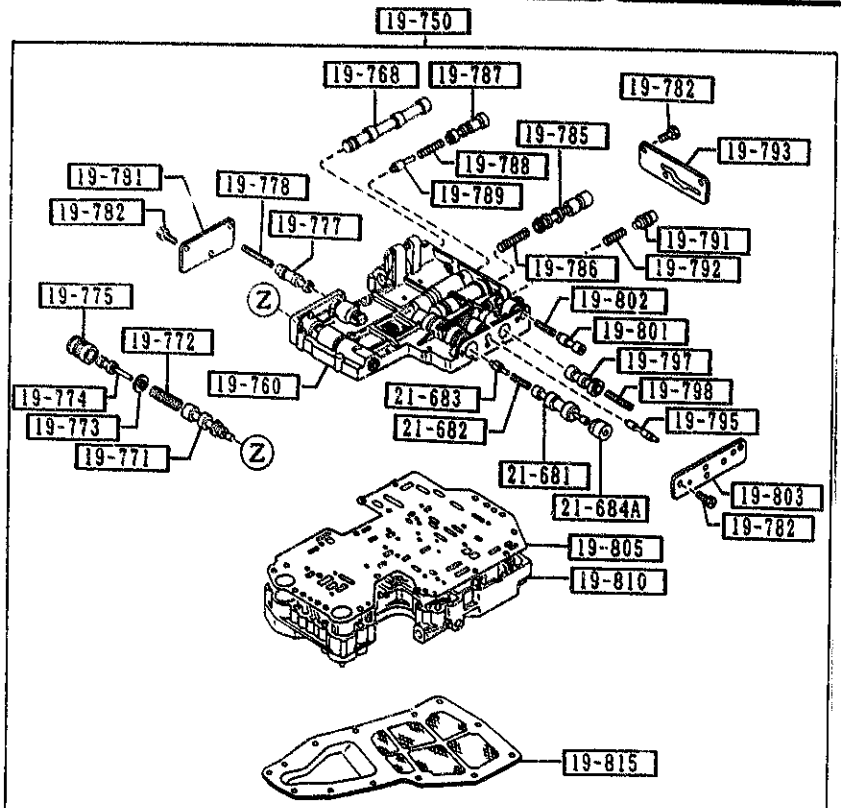

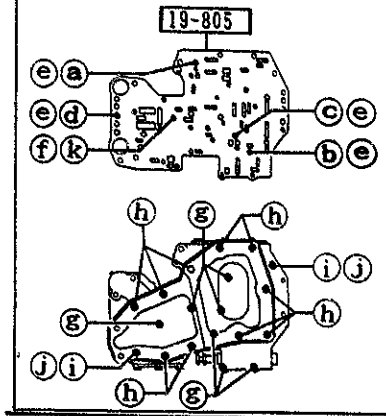

a	D	19-8A4	D=1.1MM
b	D	19-8B1	D=2.0MM
c	D	19-807	D=1.5MM (BU01-19-807)
d	D	19-807	D=1.8MM (BU17-19-807)
e	L D	19-808	D=4.77MM, L=15.5MM
f	L D	19-814	D=5.6MM, L=26.8MM
g	L	19-816	M5, L=25MM
h	L	19-817	M5, L=40MM
i		19-818	M6, L=57MM
j		19-819	
k		99611-2000	

AUNA02

PART NO.	QTY	MODEL/RESTRICTION	MODEL/RESTRICTION	MODEL/RESTRICTION	FROM-TO
19-805		PLATE, SEPARATOR			
BU55-19-805	1				
19-807		VALVE, ORIFICE CHECK			
BU01-19-807	1				
BU17-19-807	1				
19-808		SPRING			
0338-19-808	4				
19-810		BODY, LWR-CONT. VALVE			
BU55-19-810	1				
19-814		SPRING			
0338-19-814	1				
19-815		STRAINER, OIL			
BU01-19-815	1				
19-816		SCREW			
0338-19-816	7				
19-817		SCREW			
0338-19-817	10				
19-818		BOLT			
0338-19-818	2				
19-819		NUT			
0338-19-819	2				
21-681		VALVE, SHIFT 3-4			
BU35-21-681A	1				
21-682		SPRING, 3-4 SHIFT			
BU35-21-682	1				
21-683		PLUG, 3-4 SHIFT			
BU03-21-683A	1				

1925 CONTROL VALVE (AUTOMATIC)

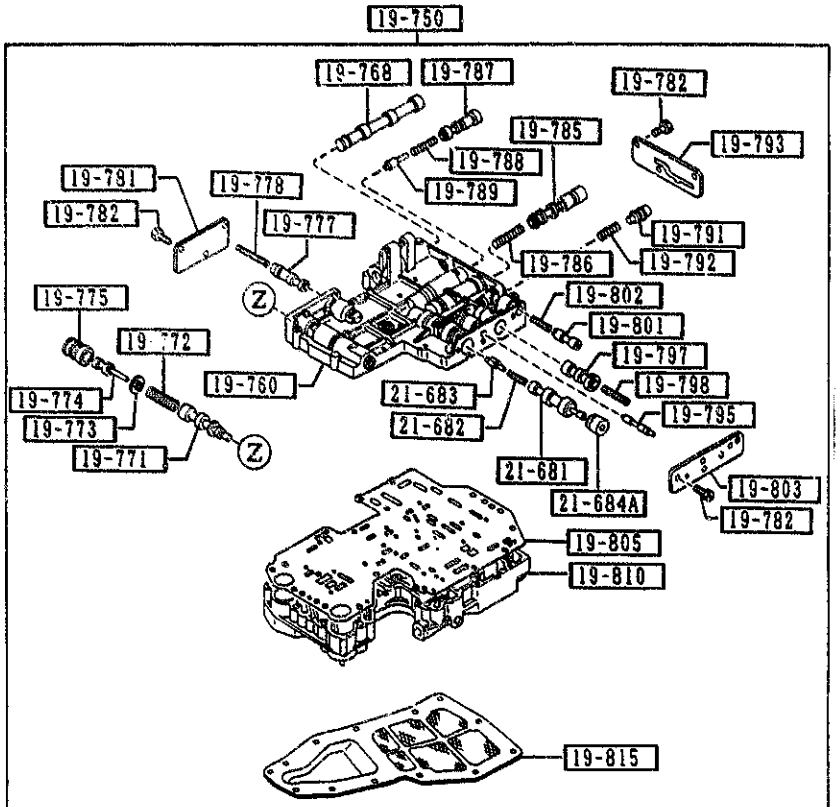

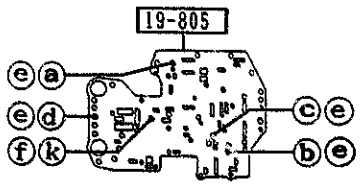

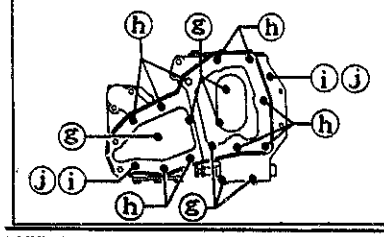

a		19-8A4	D=1.1MM
b		19-8B1	D=2.0MM
c		19-807	D=1.5MM (BU01-19-807)
d		19-807	D=1.8MM (BU17-19-807)
e		19-808	D=4.77MM, L=15.5MM
f		19-814	D=5.6MM, L=26.8MM
g		19-816	M5, L=25MM
h		19-817	M5, L=40MM
i		19-818	M6, L=57MM
j		19-819	
k		99611-2000	

PART NO.	QTY	MODEL/RESTRICTION	MODEL/RESTRICTION	MODEL/RESTRICTION	FROM TO
21-684A		SLEEVE,3-4 SHIFT			
BU35-21-684	1				

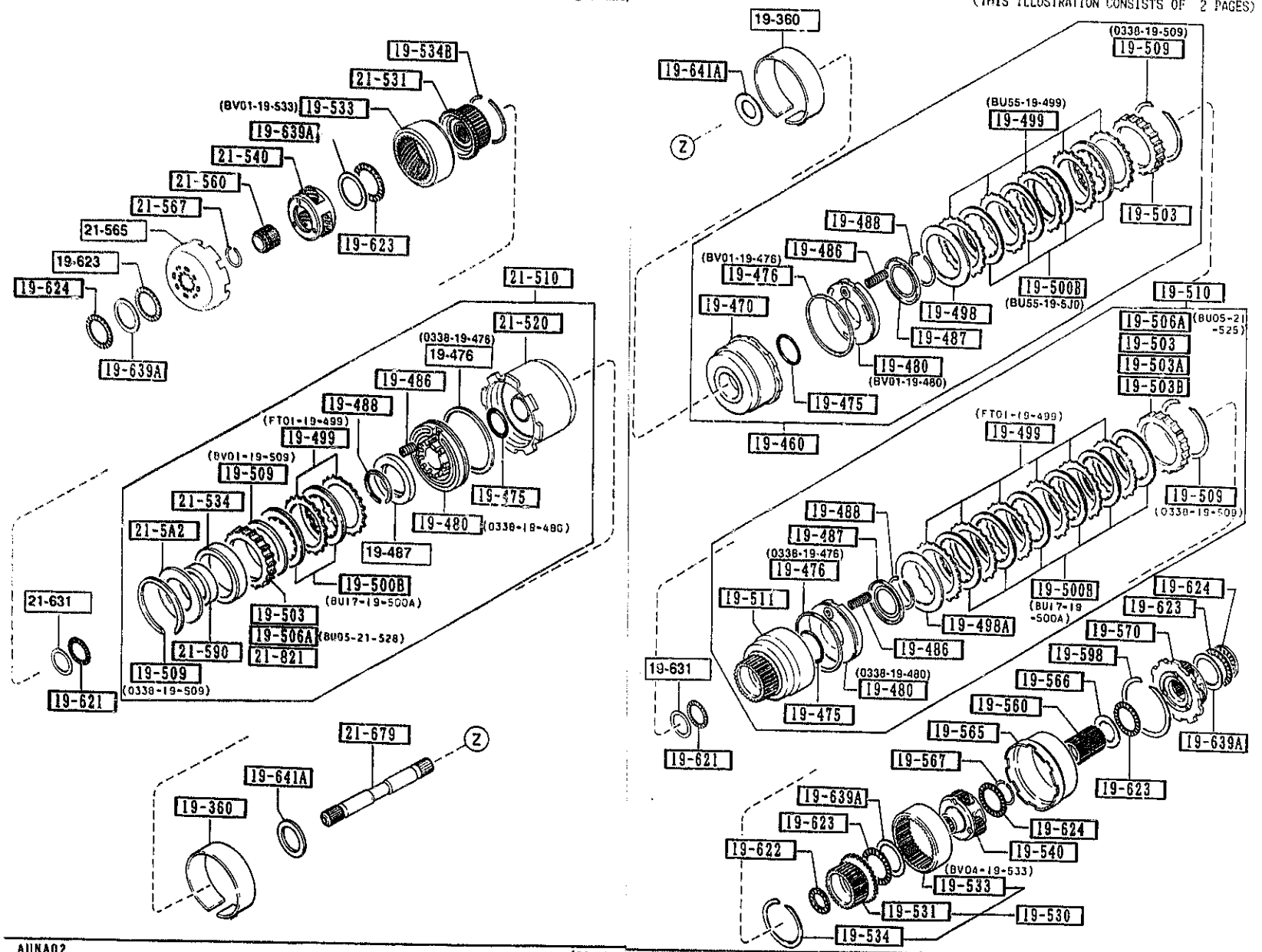
19-534B
21-531
(BV01-19-533)
19-533
19-639A
21-540
21-560
21-567
21-565
19-623
19-624
19-639A
19-623
21-510
21-520
(0338-19-476)
19-476
19-486
19-488
(FTOI-19-499)
19-499
(BV01-19-509)
19-509
21-534
21-5A2
19-475
19-480
(0338-19-480)
19-487
19-500B
(BU17-19-500A)
19-503
19-506A
(BU05-21-528)
21-821
21-590
19-509
(0338-19-509)
21-631
19-621
19-360
19-641A
Z
(0338-19-509)
19-509
(BU55-19-499)
19-499
19-503
19-488
19-486
(BV01-19-476)
19-476
19-500B
(BU55-19-5J0)
19-498
19-487
19-470
19-480
(BV01-19-480)
19-475
19-460
19-510
19-506A
(BU05-21-525)
19-503
19-503A
19-503B
(FTOI-19-499)
19-499
19-509
(0338-19-509)
19-488
19-487
(0338-19-476)
19-476
19-500B
(BU17-19-500A)
19-511
19-498A
19-486
19-624
19-623
19-570
19-598
19-566
19-560
19-565
19-567
19-639A
19-623
19-624
19-540
(BV04-19-533)
19-533
19-531
19-530
19-534
19-622
19-631
19-621
(0338-19-480)
19-480
19-475
21-679
Z
19-641A
19-360

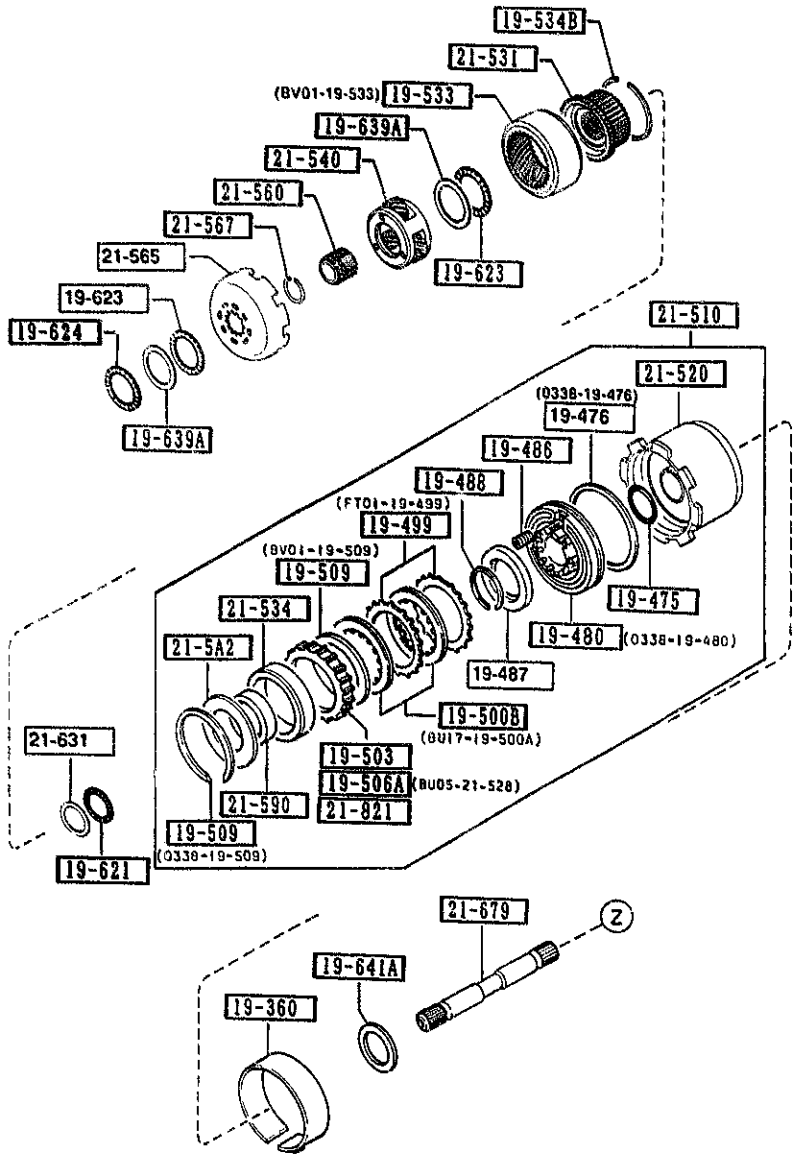

PART NO.	QTY	MODEL/RESTRICTION	MODEL/RESTRICTION	MODEL/RESTRICTION	FROM-TO
19-360		BAND,BRAKE			
0338-19-360B	2				
19-460		CLUTCH,FRONT			
BU55-19-460	1				
19-470		DRUM,CLUTCH			
BU55-19-470	1				
19-475		SEAL,'O'RING			
0338-19-475	3				
19-476		SEAL,LATHE CUT			
BV01-19-476	1				
0338-19-476	2				
19-480		PISTON,CLUTCH			
BV01-19-480	1				
0338-19-480	2				
19-486		SPRING,PISTON RETURN			
0338-19-486	28				
19-487		RETAINER,SPRING			
0338-19-487	3				
19-488		RING,SNAP			
0338-19-488	3				
19-498		PLATE,DISHED			
0338-19-498	1				
19-498A		PLATE,DISHED			
BU17-19-498	1				
19-499		PLATE,DRIVEN			
BU55-19-499	5				
FT01-19-499	8				
19-500B		PLATE,DRIVEN			

(THIS ILLUSTRATION CONSISTS OF 2 PAGES)

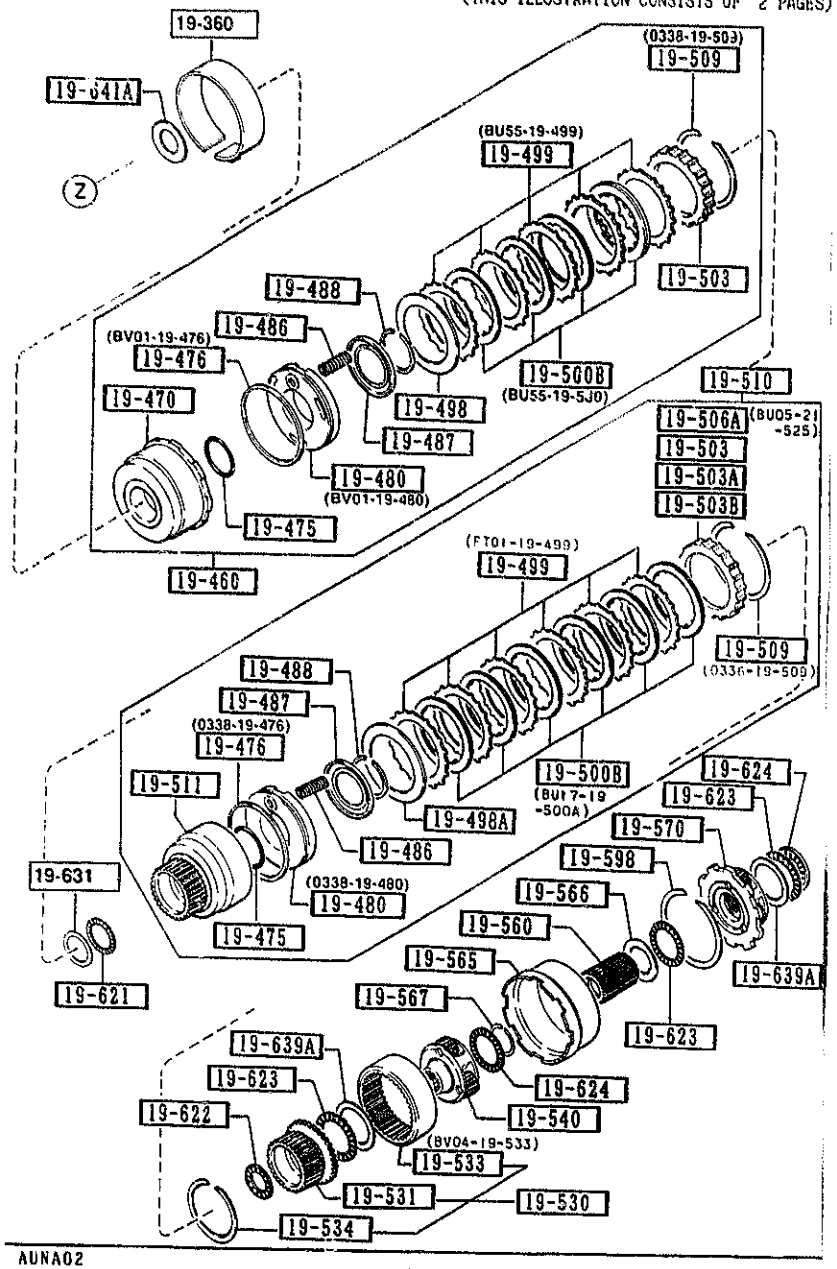

AUNA02

PART NO.	QTY	MODEL/RESTRICTION	MODEL/RESTRICTION	MODEL/RESTRICTION	FROM-TO
CONT'D					
BU55-19-5J0	4				
BU17-19-500	8				-0C01
AN(BU17-19-500A)					
BU17-19-500A	8				0C01-
19-503		PLATE,RETAINING			
3959-19-503	1	T=5MM			
3959-19-504	1	T=5.2MM			
3959-19-505	1	T=5.4MM			
3959-19-506	2	T=5.6MM			
3959-19-507	2	T=5.8MM			
3959-19-508	2	T=6MM			
3959-19-509	3	T=6.2MM			
19-503A		PLATE,RETAINING			
1758-19-503	1	T=7.2MM			
1758-19-504	1	T=7.4MM			
1758-19-505	1	T=7.6MM			
19-503B		PLATE,RETAINING			
BV02-19-506	1	T=6.6MM			
BV02-19-507	1	T=6.8MM			
BV02-19-508	1	T=7MM			
BV02-19-505	1	T=6.4MM			-1301
19-506A		PLATE,RETAINING			
BU05-21-528	1	T=7MM			
BU05-21-525	1	T=6.4MM			1301-

0C01 NA35**-220813
1301 NA35**-231464

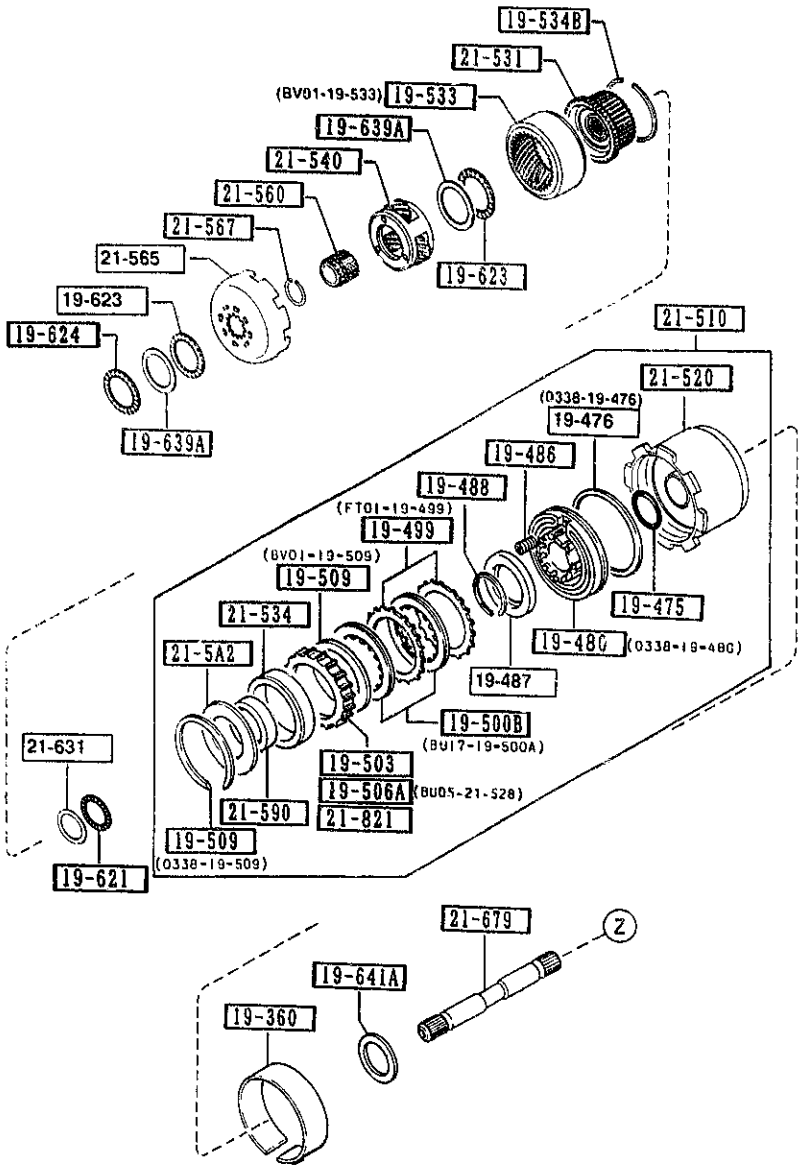

PART NO.	QTY	MODEL/RESTRICTION	MODEL/RESTRICTION	MODEL/RESTRICTION	FROM TO
19-509		RING,SNAP			
BV01-19-509	1				
0338-19-509	3				
19-510		CLUTCH,REAR			
BV01-19-510 C (BV01-19-510A)	1				-2401
BV01-19-510A	1				2401-
19-511		DRUM,REAR CLUTCH			
1758-19-511 AN(1758-19-511A)	1				-2401
1758-19-511A	1				2401-
19-530		HUB,REAR CLUTCH			
BV04-19-530	1				
19-531		HUB,REAR CLUTCH			
BV04-19-531	1				
19-533		GEAR,INTERNAL			
BV01-19-533	1				
BV04-19-533	1				
19-534		RING,SNAP			
0338-19-534	1				
19-534B		RING,SNAP			
BU03-19-534	1				
19-540		CARRIER,FRONT			
BV01-19-540A	1				
19-560		GEAR,SUN			
BV04-19-560	1				
19-565		SHELL,CONNECTING			
BV04-19-565	1				
19-566		RACE,SHELL BEARING			
BV04-19-566	1				

BV01-19-510
C BV01-19-510A
C FT01-19-622

2401 NA35**-321905

(THIS ILLUSTRATION CONSISTS OF 2 PAGES)

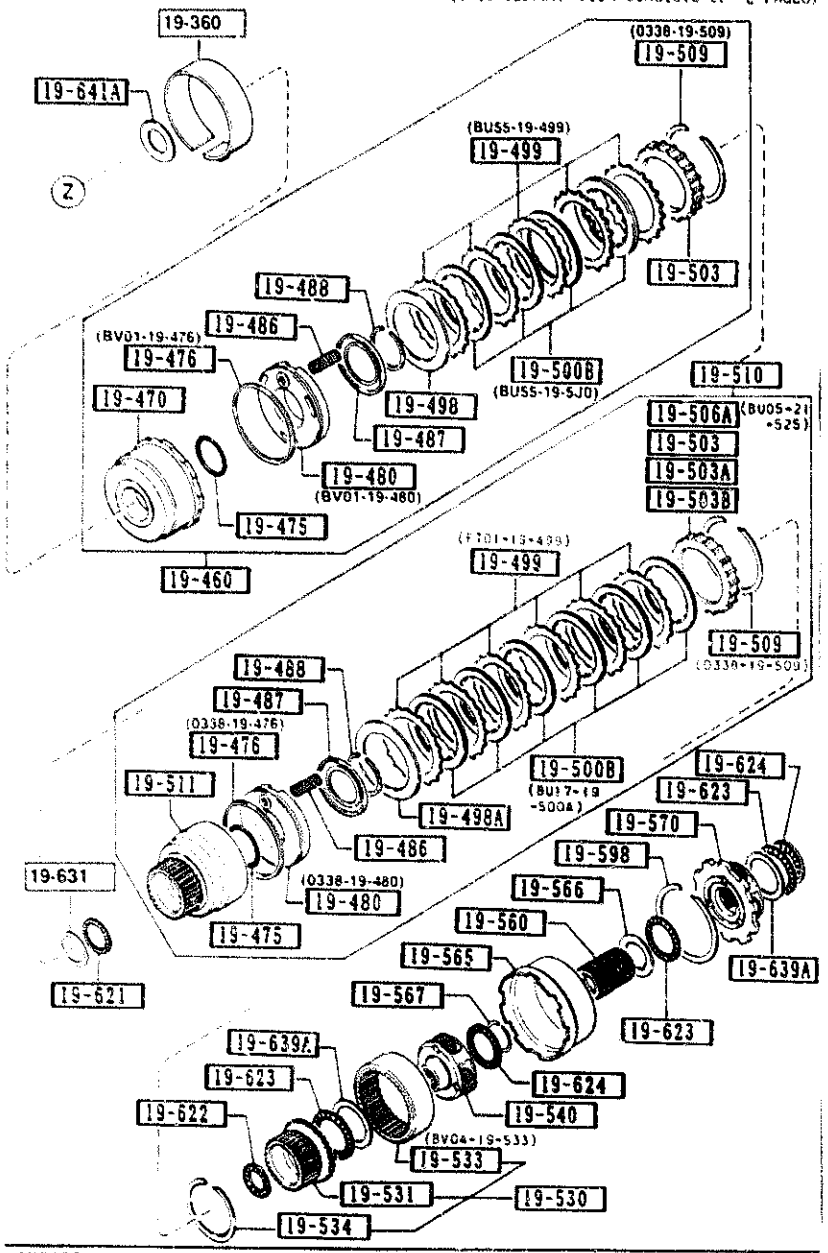

AUNA02

1930 -4 CLUTCHES & PLANETARY GEARS (AUTOMATIC)

PART NO.	QTY	MODEL/RESTRICTION	MODEL/RESTRICTION	MODEL/RESTRICTION	FROM-TO
19-567 BU02-19-567	1	RING,SNAP			
19-570 BV01-19-570A	1	CARRIER,REAR			
19-598 0338-19-598	1	RING,SNAP			
19-621 0338-19-621	2	BEARING,NEEDLE			
19-622 FT01-19-622	1	BEARING,NEEDLE D=33.8MM			
19-623 0338-19-623A	5	BEARING,NEEDLE			
19-624 0338-19-624	3	BEARING,NEEDLE			
19-631 0338-19-631	1	RACE,BRG.PUMP COVER T=1.2MM			
0338-19-632	1	T=1.4MM			
0338-19-633	1	T=1.6MM			
0338-19-634	1	T=1.8MM			
0338-19-635	1	T=2MM			
0338-19-636	1	T=2.2MM			
19-639A 0338-19-639	4	RACE,BEARING			
19-641A 0338-19-641	2	WASHER T=1.9MM			
0338-19-642		T=2.1MM			

CAT. AUNA02-07

1993-12

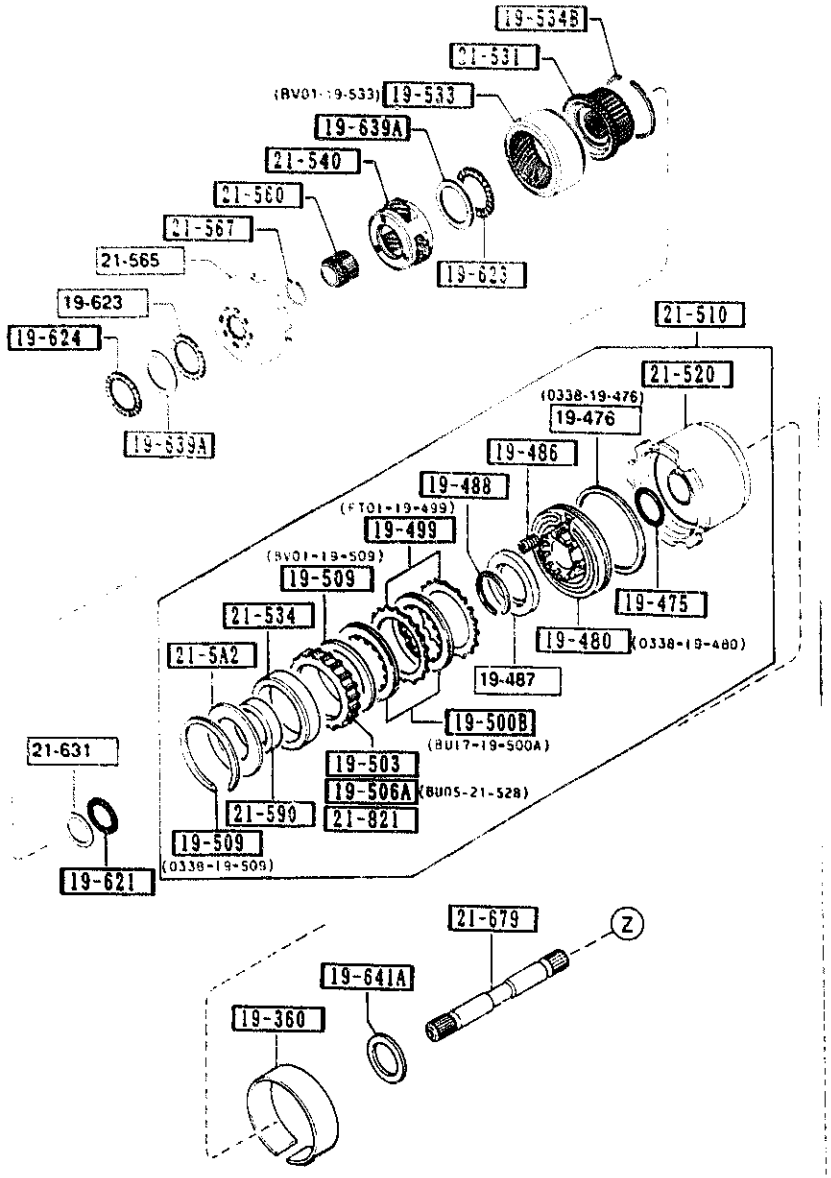

PART NO.	QTY	MODEL/RESTRICTION	MODEL/RESTRICTION	MODEL/RESTRICTION	FROM TO
CONT'D					
	2				
0338-19-643	2	T=2.3MM			
0338-19-644	2	T=2.5MM			
0338-19-645	2	T=2.7MM			
0338-19-646	2	T=1.5MM			
0338-19-647	2	T=1.7MM			
0338-19-648	2	T=1.3MM			
21-5A2		RACE,SIDE-ONE WAY CLUTCH			
BV01-21-5A2	1	T=0.6MM			
BV01-21-5A3	1	T=0.8MM			
BV01-21-5A4	1	T=1MM			
BV01-21-5A5	1	T=1.2MM			
BV01-21-535	1	T=0.4MM			
21-510		CLUTCH,DIRECT			
BU55-21-510	1				
21-520		DRUM,DIRECT			
BU55-21-5A0	1				
21-531		HUB,O/DRIVE CLUTCH			
BV01-21-536	1				
21-534		RACE,OUTER-ONE WAY CLUTCH			
BV01-21-534	1				
21-540		CARRIER,OVER DRIVE			
BU03-21-540	1				
21-560		GEAR,OVER DRIVE			
BU03-21-560	1				

1930 CLUTCHES & PLANETARY GEARS (AUTOMATIC) (2/2)

(THIS ILLUSTRATION CONSISTS OF 2 PAGES)

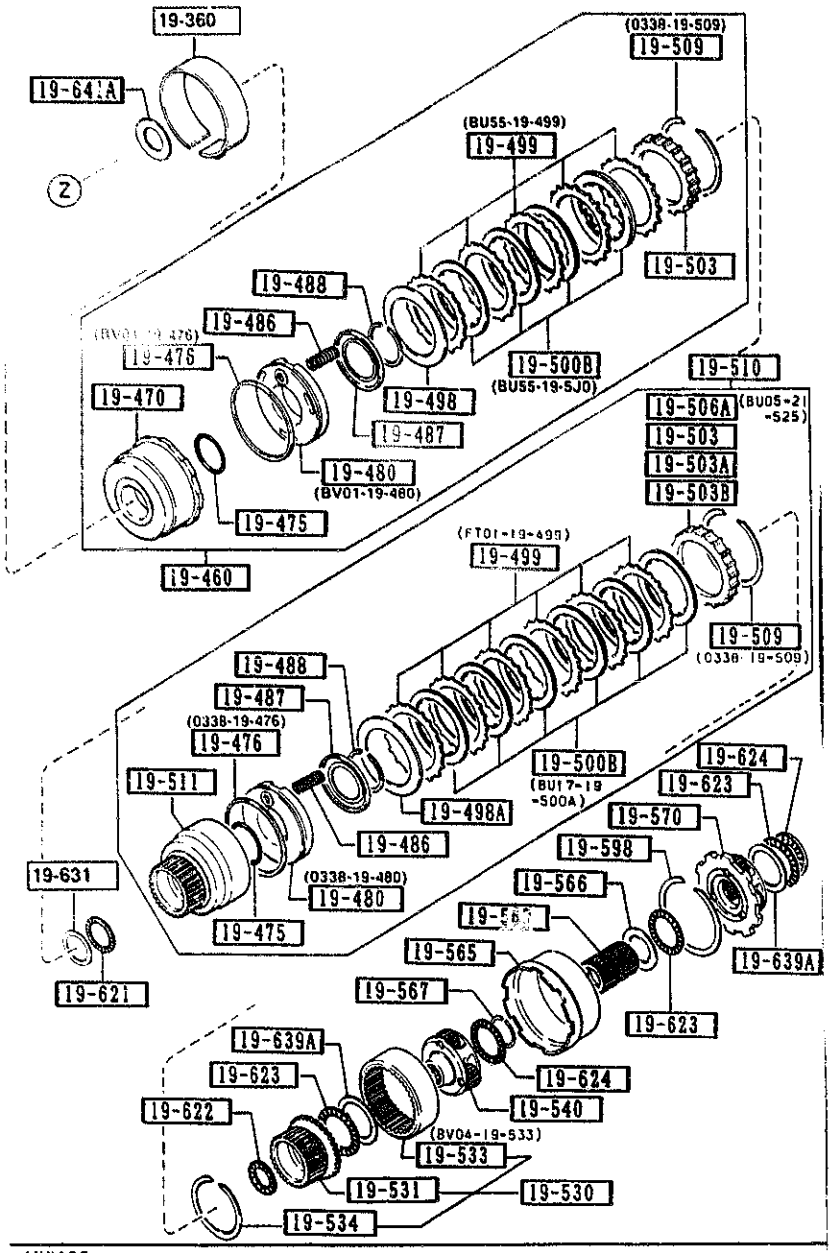

PART NO.	QTY	MODEL/RESTRICTION	MODEL/RESTRICTION	MODEL/RESTRICTION	FROM-TO
21-565		CONNECTING,SHELL			
BU03-21-565	1				
21-567		RING,SNAP			
BU03-21-567	1				
21-590		CLUTCH,ONE WAY			
BV01-21-533	1				
21-631		RACE,BRG.HUB CLUTCH			
BU01-21-631	1	L=1.2MM			
BU01-21-632	1	L=1.4MM			
BU01-21-633	1	L=1.6MM			
BU01-21-634	1	L=1.8MM			
BU01-21-635	1	L=2MM			
BU01-21-636	1	L=2.2MM			
21-679		SHAFT,INTERMEDIATE			
BU01-21-679	1				
21-821		PLATE,RETAINING			
BV01-21-821A	1				

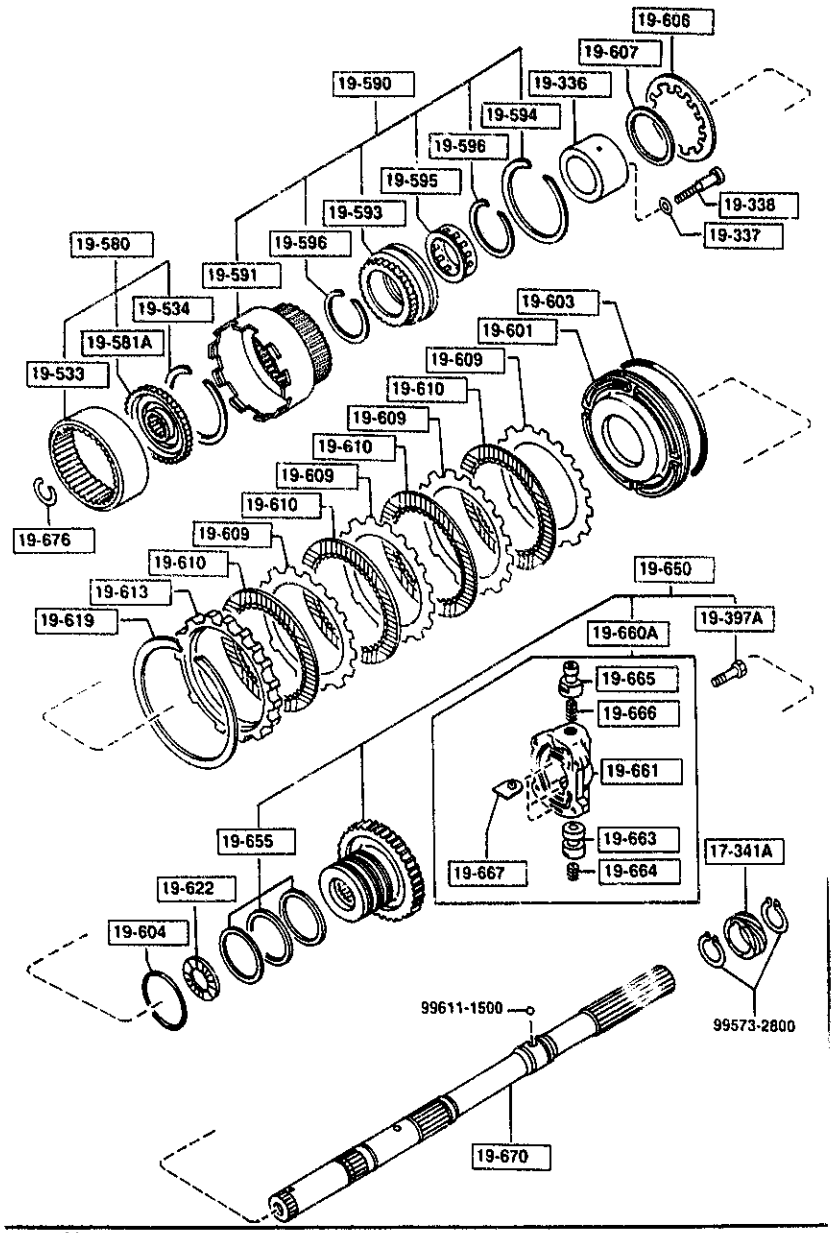

AUNA02

1940 -1 GOVERNOR, LOW & REVERSE PISTON (AUTOMATIC)

PART NO.	QTY	MODEL/RESTRICTION	MODEL/RESTRICTION	MODEL/RESTRICTION	FROM·10
17-341A 1281-17-341	1	GEAR,SPEEDO.DRIVE			
19-336 0338-19-336	1	RACE,INNER			
19-337 0338-19-337	8	WASHER,PLAIN			
19-338 0338-19-338	8	BOLT			
19-397A 0338-19-397	4	BOLT			
19-533 BV04-19-533	1	GEAR,INTERNAL			
19-534 0338-19-534	1	RING,SNAP			
19-580 BV01-19-5K0	1	FLANGE			
19-581A BV04-19-581	1	HUB,DRIVE			
19-590 0338-19-590	1	DRUM,CONNECTING			
19-591 0338-19-591	1	DRUM,CONNECTING			
19-593 0338-19-593	1	RACE,OUTER			
19-594 0338-19-594	1	RING,SNAP			
19-595 0338-19-595	1	CLUTCH,ONE WAY			

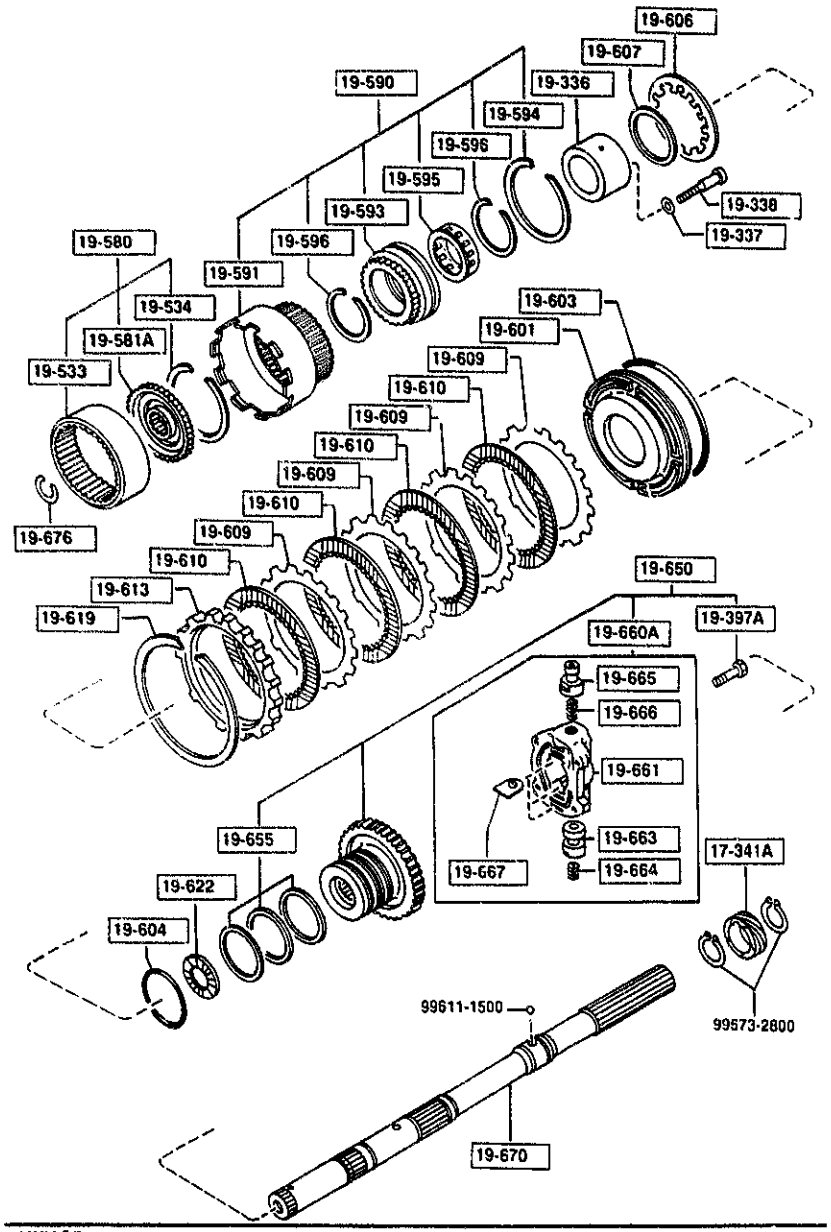

AUNA02

1940 -2 GOVERNOR, LOW & REVERSE PISTON (AUTOMATIC)

PART NO.	QTY	MODEL/RESTRICTION	MODEL/RESTRICTION	MODEL/RESTRICTION	FROM-TO
19-596		RING,SNAP			
0338-19-596	2				
19-601		PISTON,LOW & REVERSE			
BT08-19-600	1				
19-603		SEAL,PISTON			
0338-19-603	1				
19-604		SEAL,'O'RING			
0338-19-604	1				
19-606		SPRING,PISTON			
0338-19-606	1				
19-607		RING,SNAP			
0338-19-607	1				
19-609		PLATE,DRIVEN			
0338-19-609	4				
19-610		PLATE,DRIVEN			
BU17-19-610	4				
19-613		PLATE,RETAINING			
1758-19-613	1	T=7.8MM			
1758-19-614	1	T=8MM			
1758-19-615	1	T=8.2MM			
1758-19-616	1	T=8.4MM			
1758-19-617	1	T=8.6MM			
1758-19-618	1	T=8.8MM			
19-619		RING,SNAP			
0338-19-619	1				
19-622		BEARING,NEEDLE			

CAT. AUNA02-07

1993-12

1940 GOVERNOR, LOW & REVERSE PISTON (AUTOMATIC)

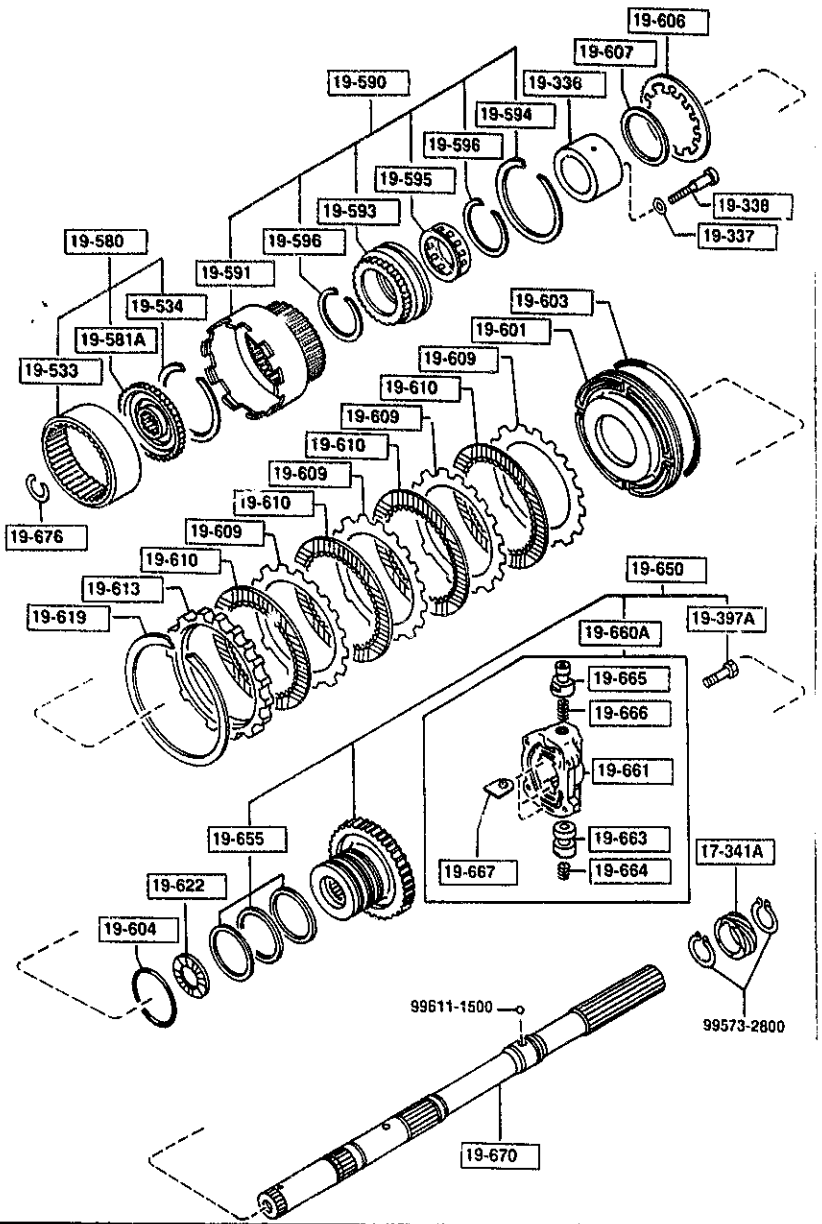

PART NO.	QTY	MODEL/RESTRICTION	MODEL/RESTRICTION	MODEL/RESTRICTION	FROM-TO
CONT'D					
FT01-19-622	1	D=33.8MM			
19-650		DISTRIBUTOR,OIL			
BU55-19-650	1				
19-655		RING,SEAL			
0338-19-655	3				
19-660A		VALVE,GOVERNOR			
BU55-19-660	1				
19-661		BODY			
BU55-19-661	1				
19-663		VALVE			
0338-19-663	1				
19-664		SPRING			
0338-19-664	1				
19-665		VALVE			
BU55-19-665	1				
19-666		SPRING,GOVERNOR			
BU55-19-666	1				
19-667		PLATE,RETAINER			
0338-19-667	3				
19-670		SHAFT			
BU55-19-670	1				
19-676		RING			
0338-19-676	1				

1950 MANUAL LINKAGE SYSTEM (AUTOMATIC)

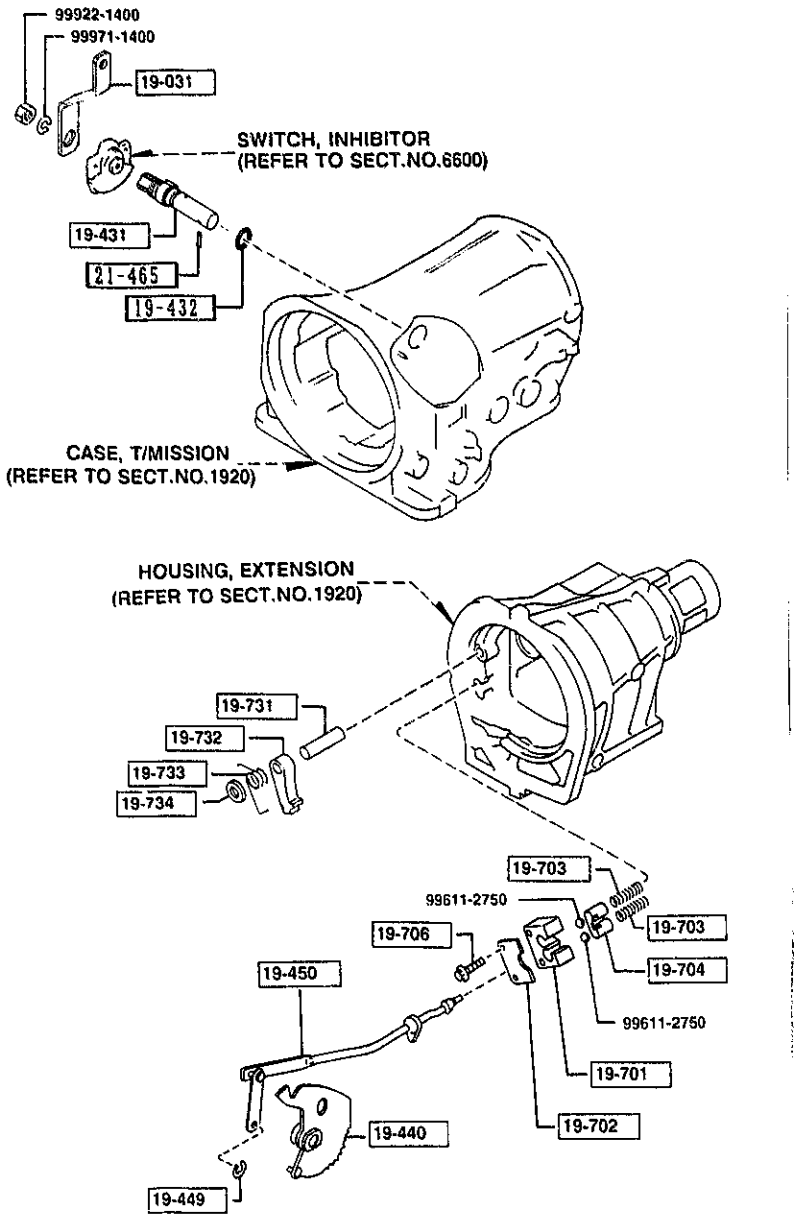

PART NO.	QTY	MODEL/RESTRICTION	MODEL/RESTRICTION	MODEL/RESTRICTION	FROM-TO
19-031		LEVER,SELECT			
BU55-19-031	1				
19-431		SHAFT,MANUAL			
BU67-19-431	1				
19-432		RING,'O'			
0338-19-432	1				
19-440		PLATE,MANUAL			
BU55-19-440	1				-2201
BU36-19-440	1				2201-
19-449		RING,SNAP			
0338-19-449	1				
19-450		ROD,PARKING			
BU17-19-450	1				
19-701		SUPPORTER,ACTUATOR			
0338-19-701A	1				-0B01
BU17-19-701	1				0B01-
19-702		PLATE,RETAINING			
0338-19-702A	1				
19-703		SPRING,BALL PARK			
0338-19-703	2				-0B01
BU17-19-703	2				0B01-
19-704		RETAINER			
0338-19-704	1				-0B01
BU17-19-704	1				0B01-
19-706		BOLT			
0338-19-706	1				
19-731		SHAFT,PARKING PAWL			
0338-19-731	1				

0B01 NA35**-217311
2201 NA35**-316887

1950 MANUAL LINKAGE SYSTEM (AUTOMATIC)

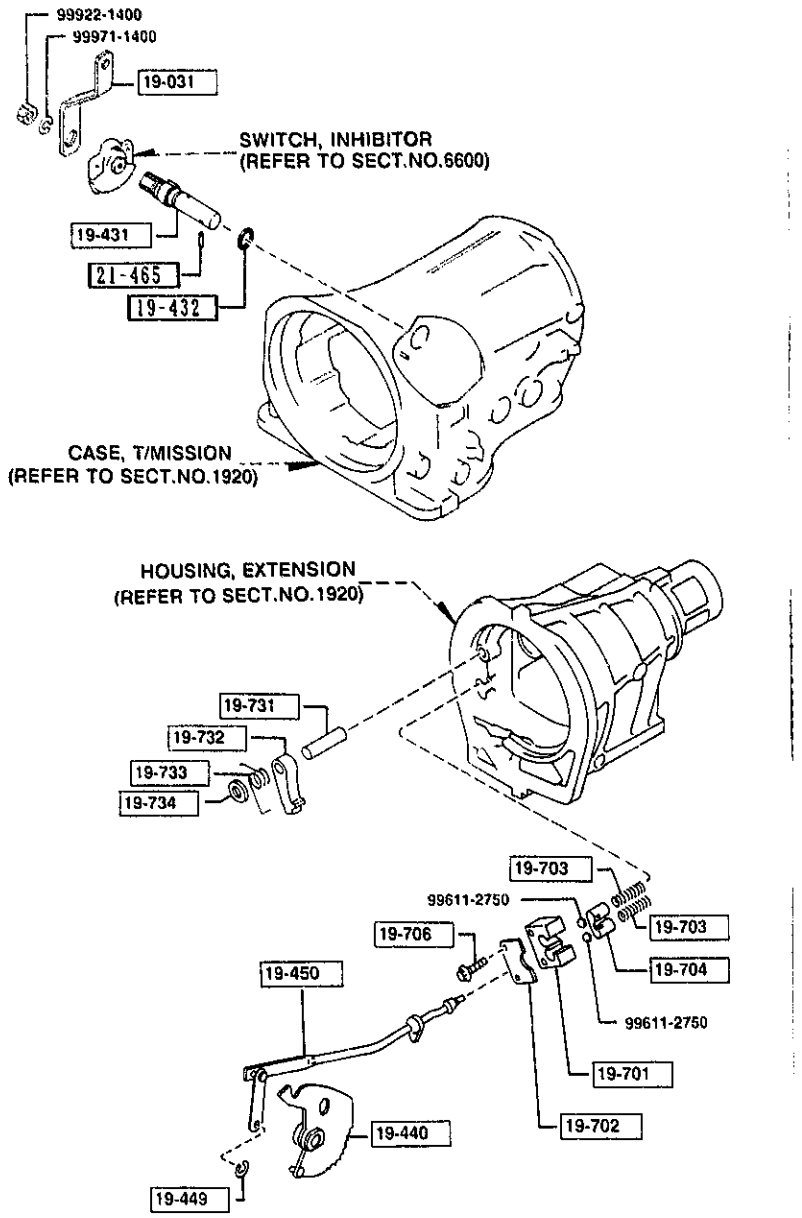

PART NO.	QTY	MODEL/RESTRICTION	MODEL/RESTRICTION	MODEL/RESTRICTION	FROM-TO
19-732		PAWL,PARKING			
BU17-19-732	1				
19-733		SPRING,PAWL RETURN			
0338-19-733C	1				
19-734		SPACER,DOWEL			
0338-19-734A	1				
21-465		PIN,SPRING-PARKING ROD			
BU67-21-465	1				

1960 GASKET & SEAL KIT (AUTOMATIC)

22-900

1-SEAL,OIL.....(1)
2-GASKET,OIL PUMP.....(1)
3-SEAL,OIL.....(1)
4-SEAL,CUT RING.....(2)
5-SEAL,PISTON.....(1)
6-SEAL,PISTON.....(1)
7-SEAL,LATHE CUT.....(1)
8-RING,"O".....(1)
9-RING,"O".....(1)
10-RING,"O".....(1)
11-SEAL,"O"RING.....(3)
12-SEAL,LAHTE CUT.....(3)
13-SEAL,PISTON.....(1)
14-SEAL,"O"RING.....(1)
15-GASKET,EXTENSION.....(1)
16-SEAL,"O"RING.....(2)
17-GASKET,OIL PAN.....(1)
18-RING,"O".....(1)
19-GASKET,DRUM SUPPORT....(1)
20-SEAL,"O"RING.....(1)
21-SEAL,"O"RING.....(1)
22-RING,"O".....(1)
23-RING,"O".....(1)
24-RING,"O".....(1)
25-GASKET,O/DRIVE CASE....(1)
26-RING,"O".....(1)
27-RING,"O".....(1)

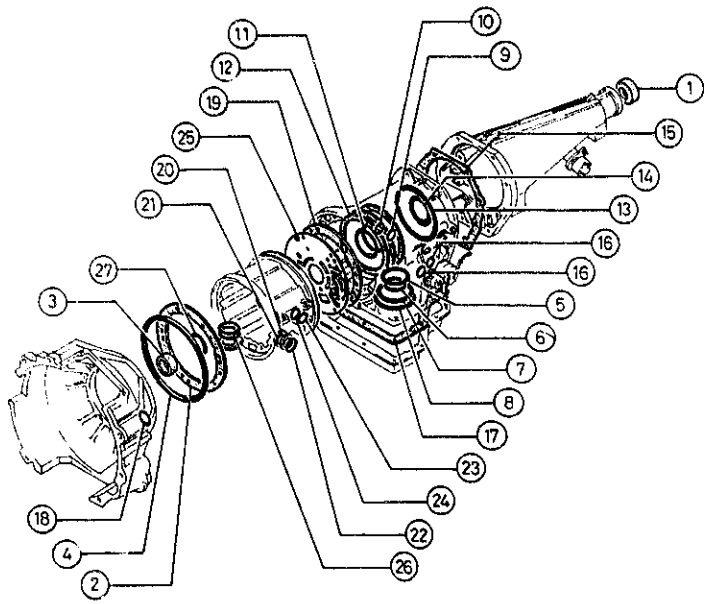

PART NO.	QTY	MODEL/RESTRICTION	MODEL/RESTRICTION	MODEL/RESTRICTION	FROM-TO
22-900		GASKET & SEAL KIT			
BU01-99-190A	1	ASBESTOS			