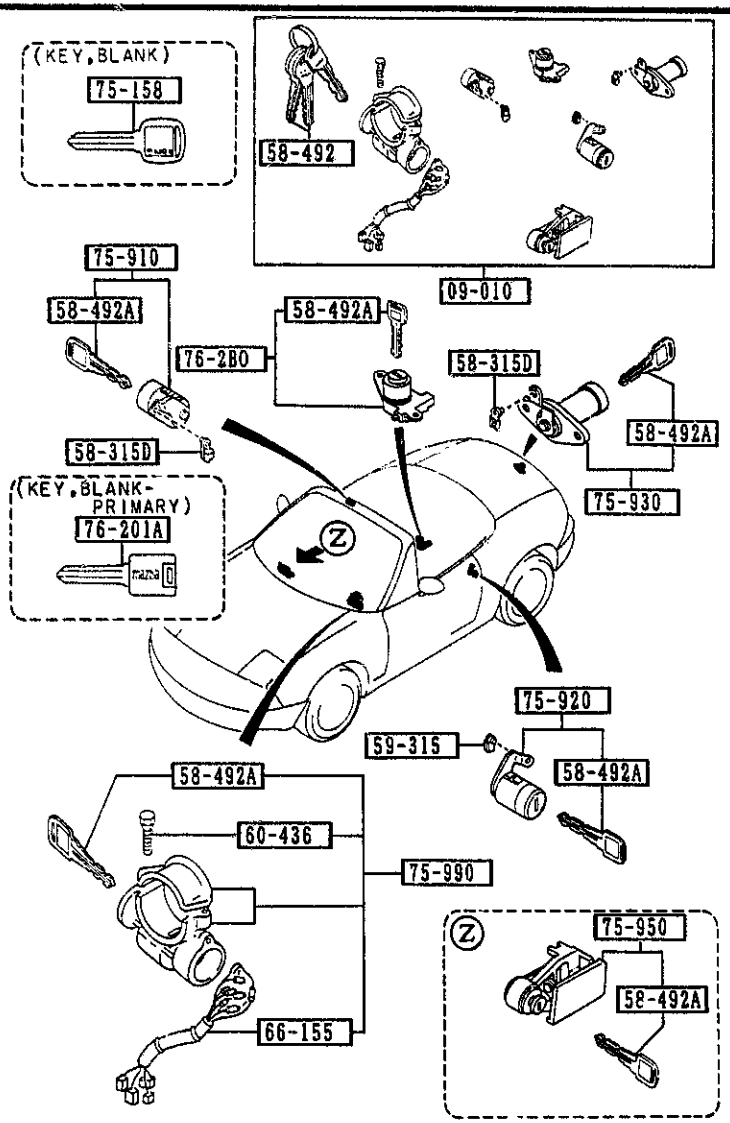

PART NO.	QTY	MODEL/RESTRICTION	MODEL/RESTRICTION	MODEL/RESTRICTION	FROM-TO
09-010		KEY SET			
NA01-09-010C	1	(MT)			-1801
00	INT-	NA0 BLACK			
88	INT-	NA1 TAN/BLACK			
NA03-09-010A	1	(AT)			-1801
00	INT-	NA0 BLACK			
88	INT-	NA1 TAN/BLACK			
NA01-09-010E	1	(MT)			1801-2513
00	INT-	NA0 BLACK			
88	INT-	NA1 TAN/BLACK			
NA03-09-010C	1	(AT)			1801-2513
00	INT-	NA0 BLACK			
88	INT-	NA1 TAN/BLACK			
NA01-09-010F	1	(MT)			2513-
00	INT-	NA0 BLACK			
88	INT-	NA1 TAN/BLACK			
NA03-09-010D	1	(AT)			2513-
00	INT-	NA0 BLACK			
88	INT-	NA1 TAN/BLACK			
58-315D		CLIP (R)			
G030-58-315	2				
58-492		KEY,PRIMARY			
BR75-58-492	2	KEY NO.IS REQUIRED			-2513
FD01-58-492	2	KEY NO.IS REQUIRED			2513-
58-492A		KEY,SECONDARY			
LA02-58-493	1	KEY NO.IS REQUIRED			-2513
FD01-58-493	1	KEY NO.IS REQUIRED			2513-
59-315		CLIP			
G030-59-315	1				

1801 NA35**-300014
2513 NA35**-327330

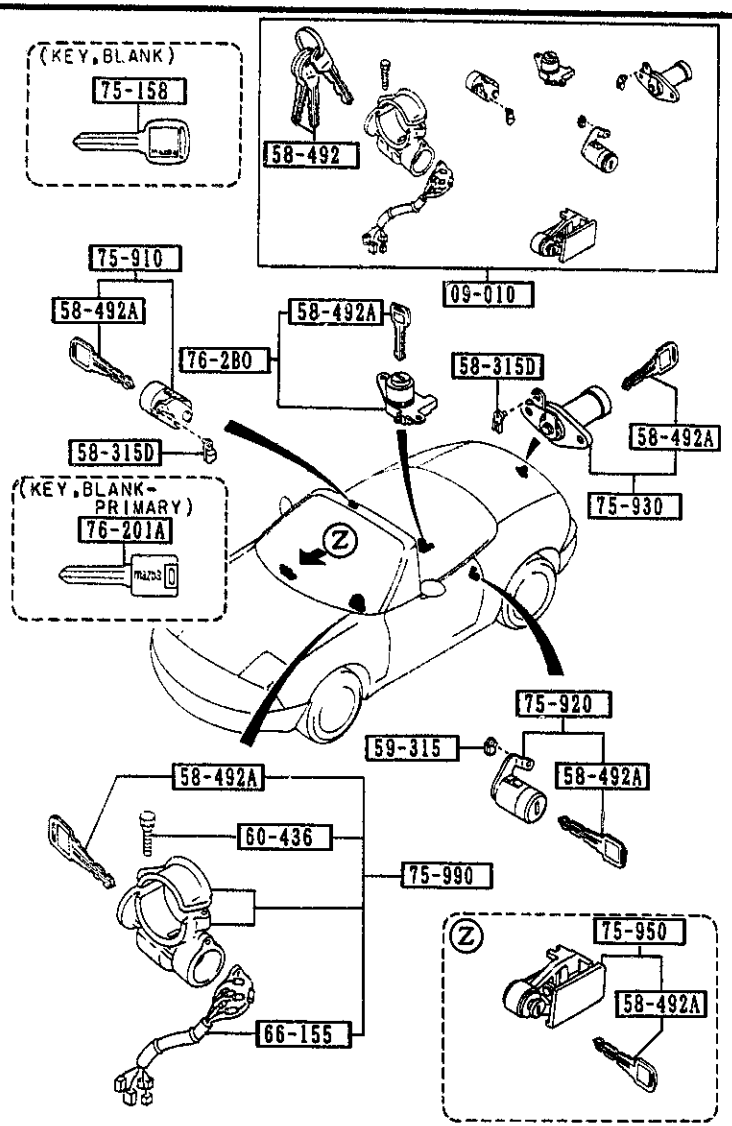

PART NO.	QTY	MODEL/RESTRICTION	MODEL/RESTRICTION	MODEL/RESTRICTION	FROM-TO
60-436		BOLT,SET			
H043-66-154	2				
66-155		SWITCH,IGNITION			
D001-66-151	1				
75-158		KEY,BLANK			
LA02-76-202	1				
75-910		KEY SUB SET(R),DOOR			
NA01-76-210	1				-1801
NA01-76-210B	1				1801-
75-920		KEY SUB SET(L),DOOR			
NA01-76-220	1				-1801
NA01-76-220B	1				1801-
75-930		KEY SUB SET,TRUNK			
NA01-76-230	1				-1801
NA01-76-230B	1				1801-
75-950		KEY SUB SET,GLOVE			
NA01-76-250	1				-1801
00	INT-	NA0 BLACK			
88	INT-	NA1 TAN			
NA01-76-250B	1				1801-
00	INT-	NA0 BLACK			
88	INT-	NA1 TAN			
75-990		KEY SUB SET,ST.LOCK			
NA01-76-290A	1	(MT)			-1801
NA03-76-290A	1	(AT)			-1801
NA01-76-290C	1	(MT)			1801-
NA03-76-290C	1	(AT)			1801-
76-2B0		KEY SUB SET,CONSOLE			
NA01-76-2B0	1				-1801
00	INT-	NA0 NA1 BLACK			

1801 NA35**-300014

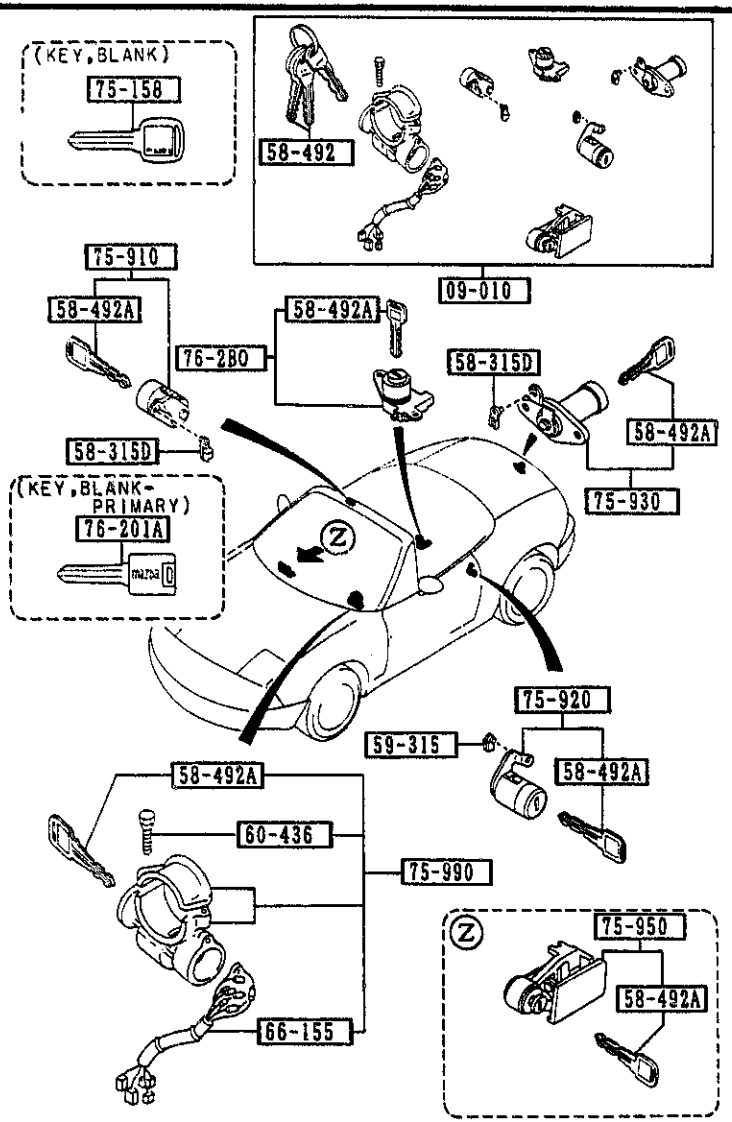

PART NO.	QTY	MODEL/RESTRICTION	MODEL/RESTRICTION	MODEL/RESTRICTION	FROM-TO
CONT'D					
NA01-76-280B	1				1801-
00	INT-	NA0 NA1 NA2 BLACK			
! 76-201A !		KEY,BLANK-PRIMARY			
B545-76-201	1				

1801 NA35**-300014

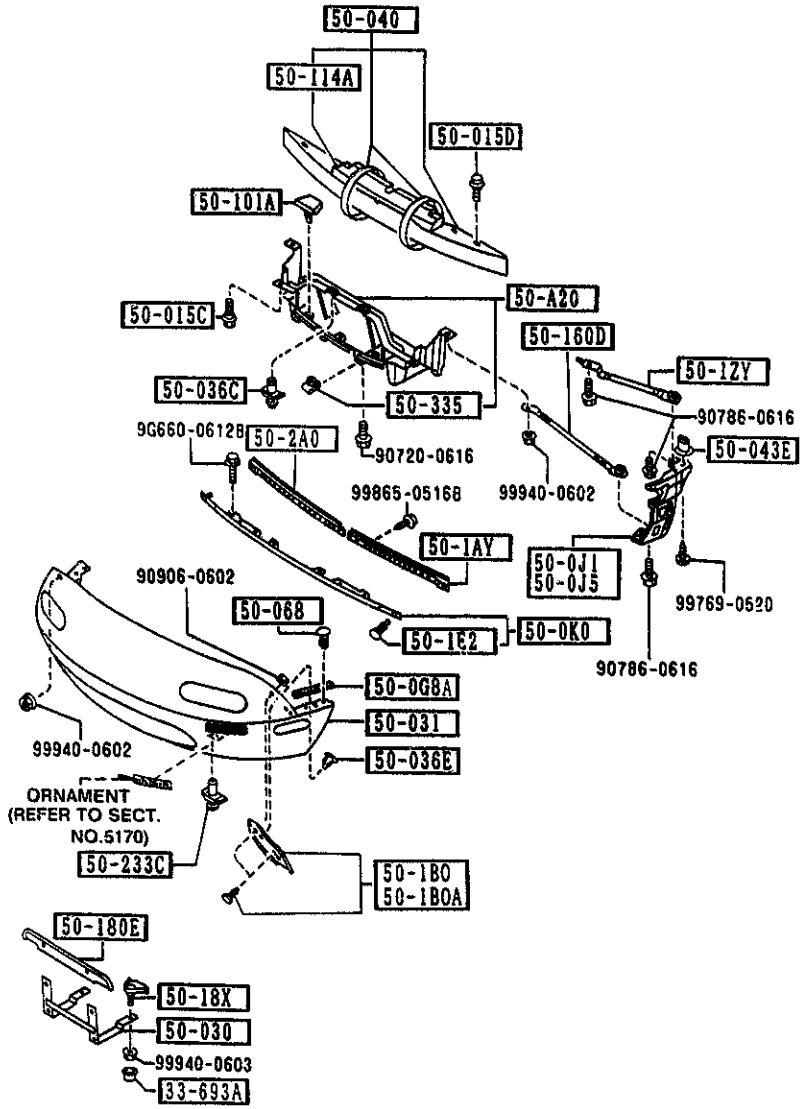

AUNA02

PART NO.	QTY	MODEL/RESTRICTION	MODEL/RESTRICTION	MODEL/RESTRICTION	FROM-TO
33-693A 0259-33-693	2	CAP,BLEEDER SCREW			
50-A20		GUIDE,AIR			
NA01-50-A20A	1	(W/O A.LOCK BRAKE)			
NA23-50-A20	1	(A.LOCK BRAKE)			
50-0G8A NA01-50-0G9	2	SEAL,RUBBER-FRONT BUMPER			
50-0J1 NA01-50-0J1	1	RETAINER(R),FRONT BUMPER			
50-0J5 NA01-50-0J5	1	RETAINER(L),FRONT BUMPER			
50-0K0 NA01-50-0K0B	1	RETAINER,FASCIA			
50-015C FB01-50-132	2	BOLT			
50-015D NA01-50-0Z2	8	BOLT			
50-030 NA01-50-180A	1	HOLDER,NO. PLATE			
50-031 NAY1-50-030	1	BUMPER,FRONT PAINT TO MATCH			
50-036C BF67-50-033	2	FASTENER			
50-036E "A01-50-1G2	6	CLIP			
50-040 NA01-50-070	1	REINFORCEMENT,BUMPER			

CAT. AUNA02-07

1993-12

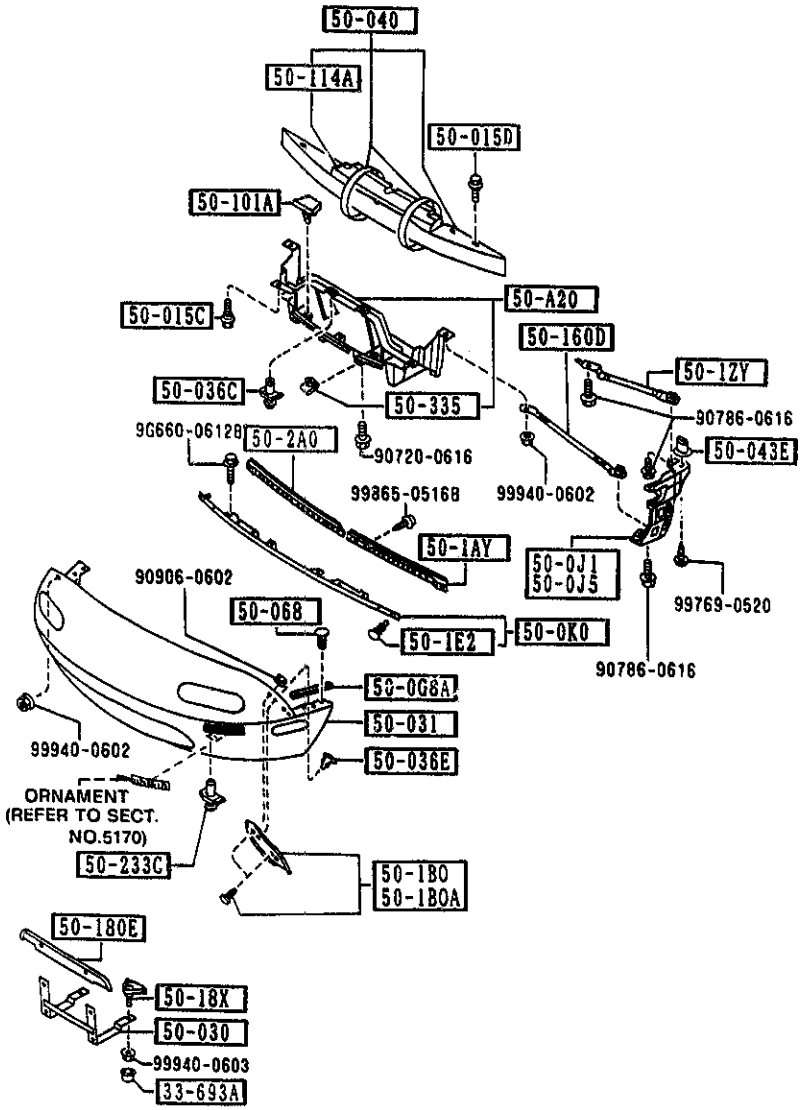

PART NO.	QTY	MODEL/RESTRICTION	MODEL/RESTRICTION	MODEL/RESTRICTION	FROM-TO
50-043E		SLIDE'A',BUMPER			
B092-50-032	2				
50-068		CLIP			
NA01-50-068	6				
50-1AY		PLATE,SET NO.1			
NA01-50-1AYB	1				
50-1B0		PLATE NO.2(R),SET-F. BUMPER			
NA01-50-1B0	1				
50-1B0A		PLATE NO.2(L),SET-F. BUMPER			
NA01-50-1C0	1				
50-1E2		BOLT			
NA01-50-1E2	2				
50-1ZY		BRACKET,FENDER			
NA01-50-1ZY	2				
50-101A		COVER,GRILLE			
NA01-50-101A	3				
50-114A		SPACER,E.A.FOAM			
NA01-50-114	1				
50-160D		BRACKET(L),F. BUMPER SIDE			
NA01-50-160	1	(A.LOCK BRAKE)			
NA01-50-160	2	(W/O A.LOCK BRAKE)			
50-18X		BRACKET,LICENCE PLATE			
NA01-50-18X	2				
50-180E		PROTECTOR,NO. PLATE			
FB01-50-144	1				
50-2A0		SET PLATE NO.1(R),RR BUMPER			
NA01-50-2A0A	1				

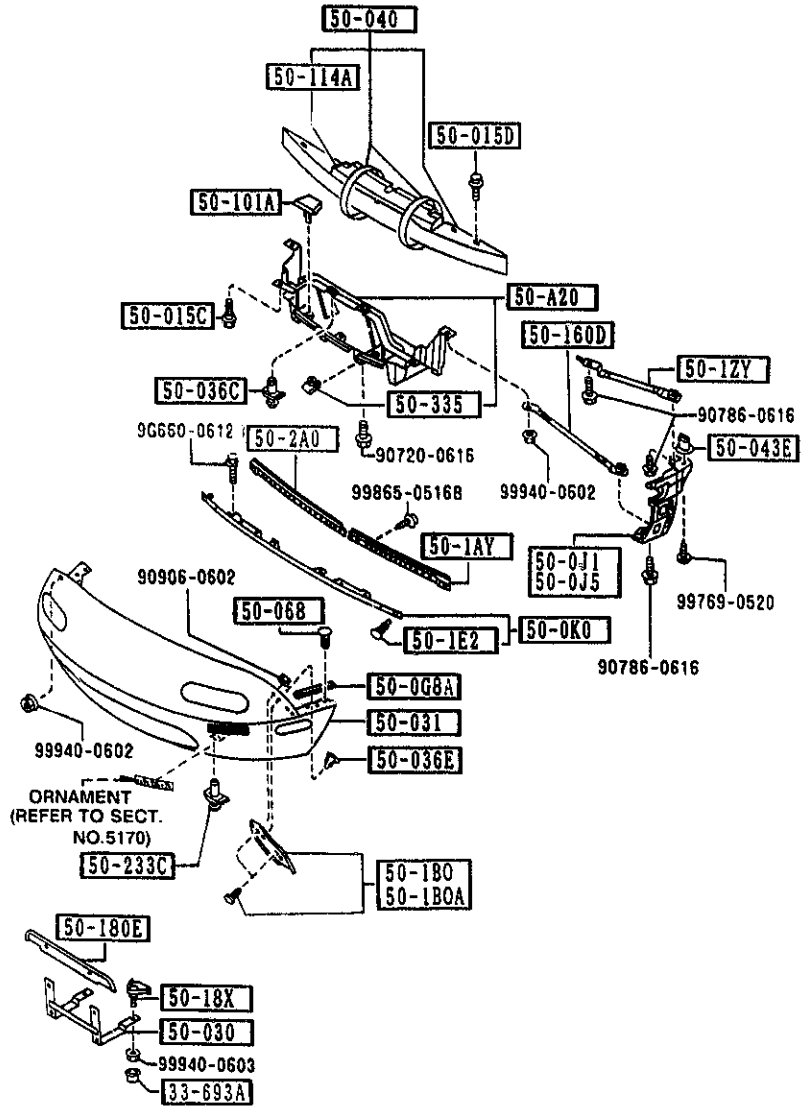

PART NO.	QTY	MODEL/RESTRICTION	MODEL/RESTRICTION	MODEL/RESTRICTION	FROM-TO
50-233C		FASTENER,REAR BUMPER			
8F82-50-233	3				
50-335		NUT,CLIP			
FB01-50-133A (FB01-50-133A)	4				-1424
FB01-50-133A	4				1424-1A01
FB01-50-133B (FB01-50-133C)	4				1A01-1A25
FB01-50-133C	4				1A25-

1424 NA35**-233635
1A01 NA35**-303526
1A25 NA35**-306286

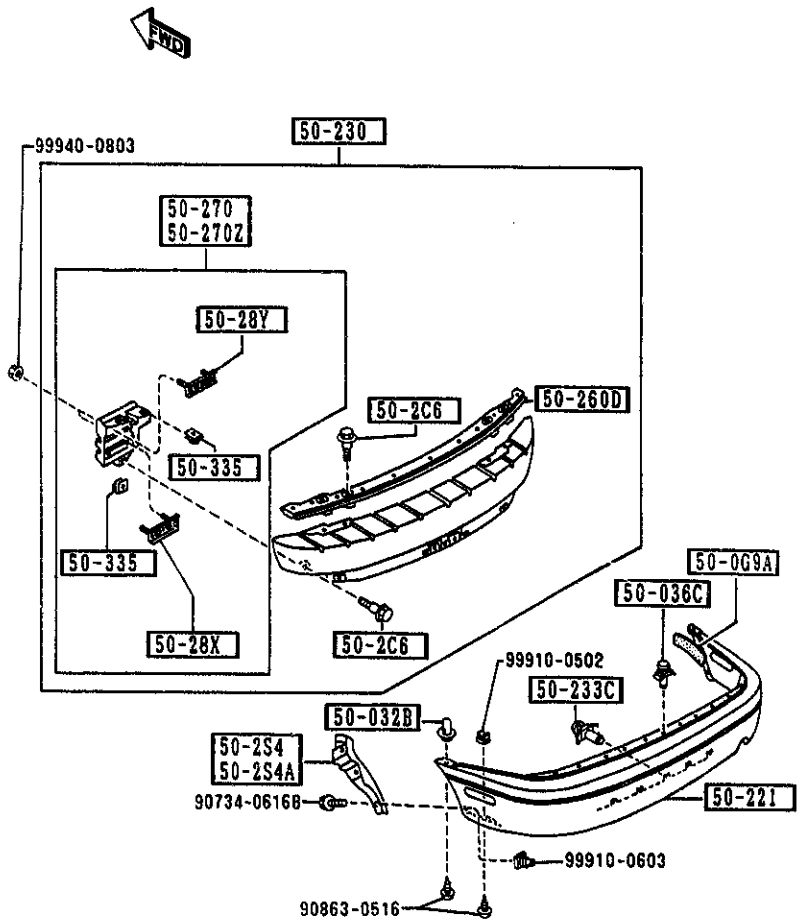

PART NO.	QTY	MODEL/RESTRICTION	MODEL/RESTRICTION	MODEL/RESTRICTION	FROM-TO
50-0G9A NA01-50-0G8	2	SEAL,RUBBER-REAR BUMPER			
50-032B GJ21-50-032	2	SLIDE'UP.',BUMPER			
50-036C BF67-50-033	11	FASTENER			
50-2C6 NA01-50-2C6	6	BOLT			
50-2S4 NA01-50-2S4	1	SHIELD(R),SPLASH-R.BUMPER			
50-2S4A NA01-50-2S5	1	SHIELD(L),SPLASH-R.BUMPER			
50-221 NAY1-50-220A	1	BUMPER,REAR PAINT TO MATCH			
50-230 NA01-50-260	1	REINFORCEMENT,BUMPER			
50-233C BF82-50-233	5	FASTENER,REAR BUMPER			
50-260D NA01-50-2J0	1	RETAINER,R.BUMPER			
50-270 NA01-50-280A	1	STAY(R),RR. BUMPER			
50-270Z NA01-50-290A	1	STAY(L),RR. BUMPER			
50-28X NA01-50-28XC	2	PLATE SET			
50-28Y		PLATE SET			

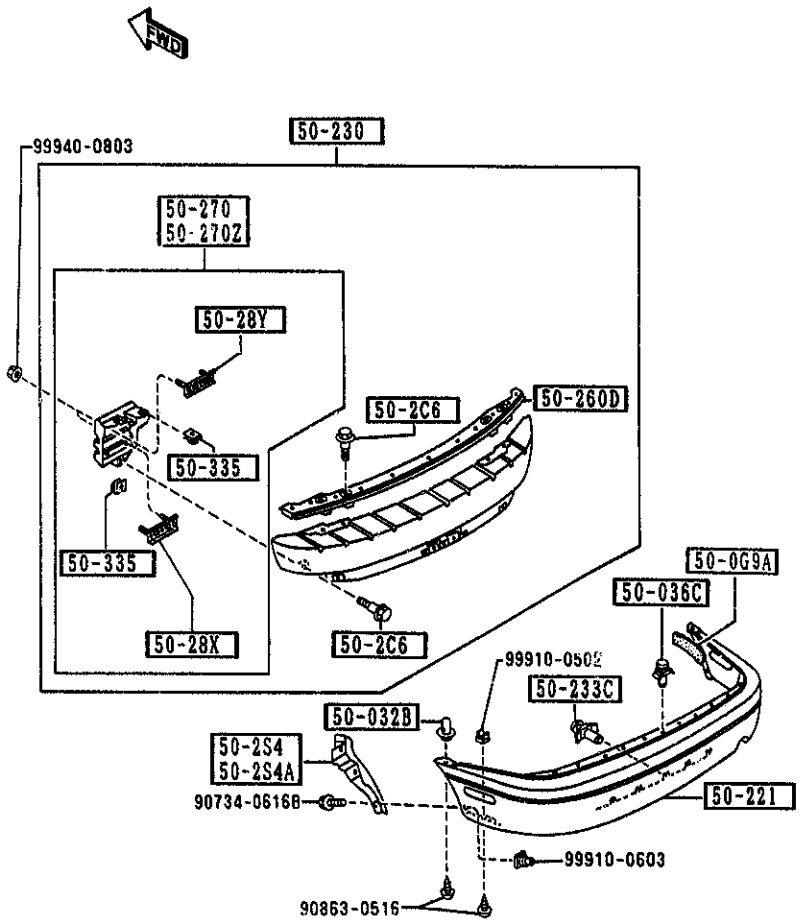

PART NO.	QTY	MODEL/RESTRICTION	MODEL/RESTRICTION	MODEL/RESTRICTION	FROM-TO
CONT'D					
NA01-50-28YC	2				
50-335		NUT,CLIP			
NA01-50-133	6				

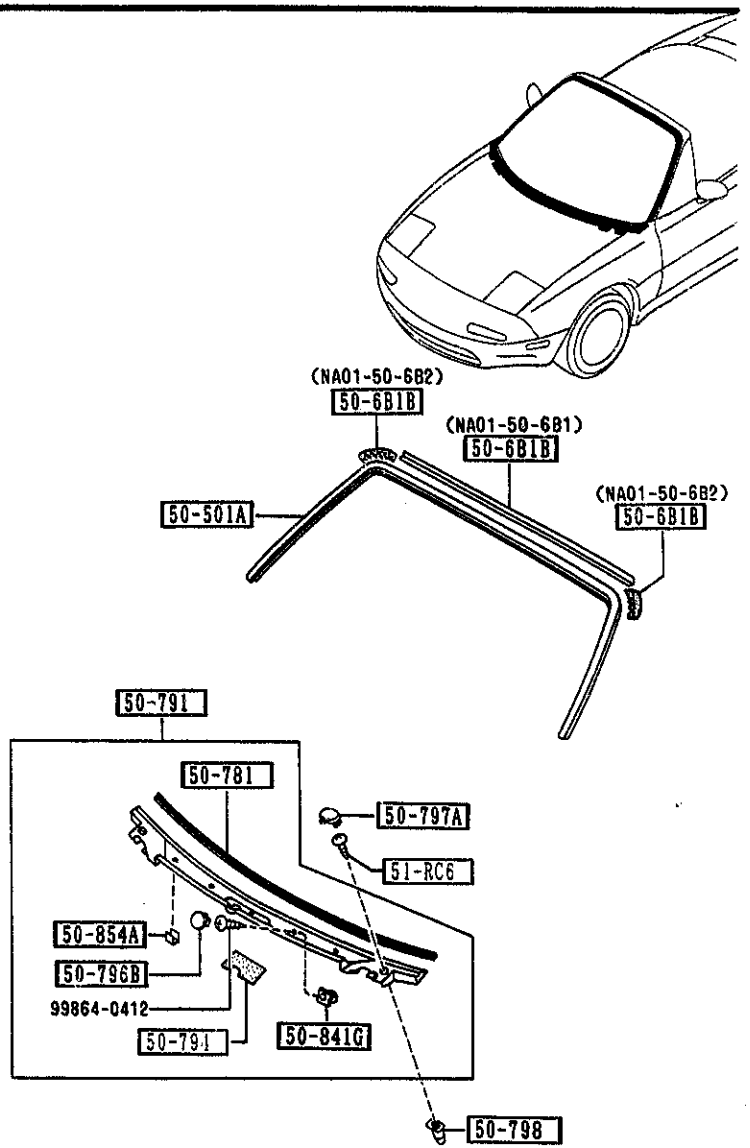

5030 -1 * WINDOW MOULDING & COWL GRILLES

PART NO.	QTY	MODEL/RESTRICTION	MODEL/RESTRICTION	MODEL/RESTRICTION	FROM-TO
50-501A NAY1-50-601	1	MOULD(UP),FRT.WINDOW			
50-6B1B NA01-50-6B1	1	PROTECTOR,MOULD-FRT WIND			
NA01-50-6B2	2				
50-781 NA01-50-792A	1	PROTECTOR,COWL GRILLE			
50-791 NA01-50-790D	1	GRILLE,COWL			
50-794 NA01-50-788	1	PROTECTOR			
50-796B B455-50-796	5	CAP			
50-797A NA01-50-797	2	CAP			
50-798 NA01-50-798	2	SCREW,GROMMET			
50-841G NA01-51-789	5	GROMMET,SCREW			
50-854A NA01-50-794	4	PROTECTOR			
51-RC6 H272-51-RC6	2	SCREW,SIDE GARNNISH			

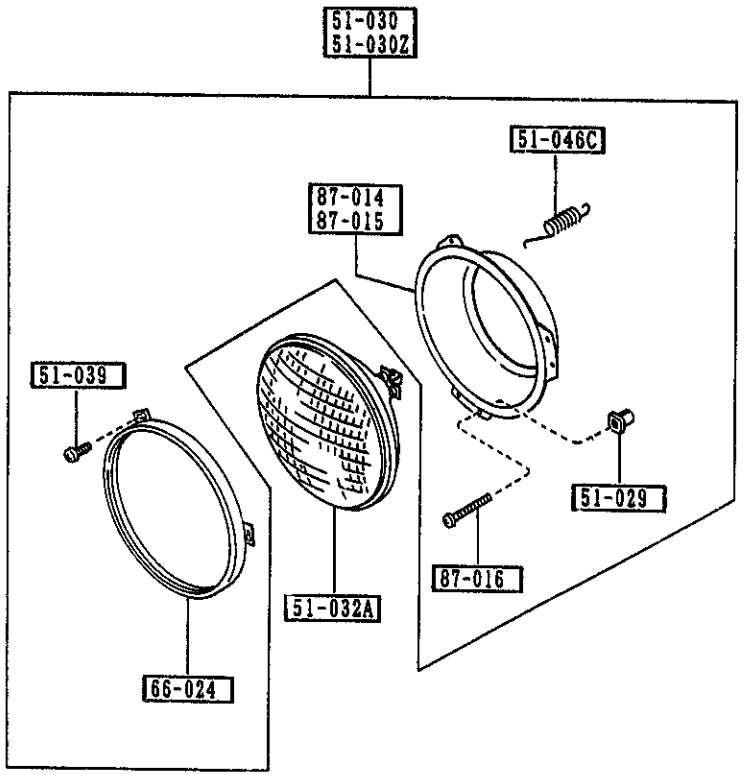

5100 -1 * HEAD LAMPS

PART NO.	QTY	MODEL/RESTRICTION	MODEL/RESTRICTION	MODEL/RESTRICTION	FROM-TO
51-029 0483-66-061A	4	GROMMET,SCREW			
51-030 8BN1-51-030	1	LAMP SET(R),HEAD			
51-030Z 8BN1-51-040	1	LAMP SET(L),HEAD			
51-032A NA02-51-031	2	UNIT,HEAD LAMP			
51-039 B481-51-0E3	6	SCREW			
51-046C NA01-51-046	2	SPRING			
66-024 NA01-51-033	2	RING,RETAINING			
87-014 NA01-51-032	1	RING(R)MOUNTING			
87-015 NA01-51-034	1	RING(L)MOUNTING			
87-016 NA01-51-037	4	SCREW,ADJUST			

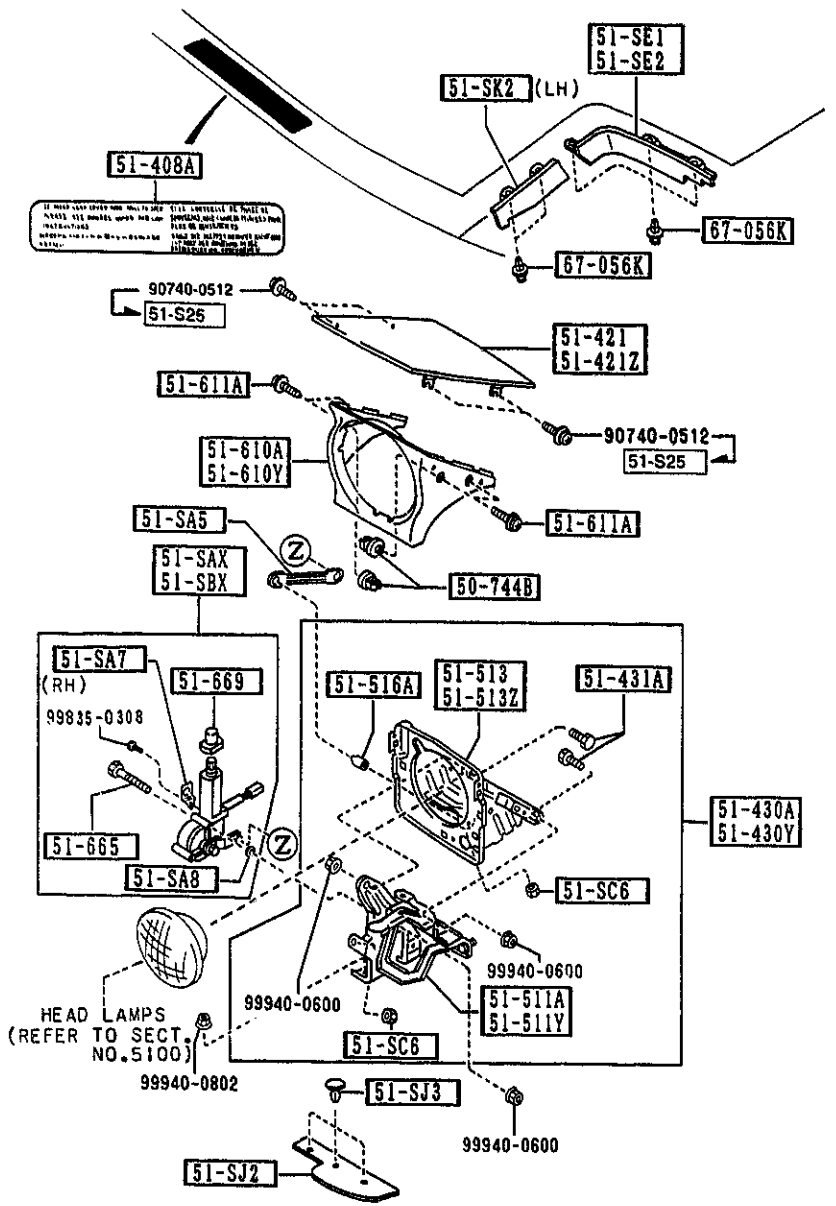

PART NO.	QTY	MODEL/RESTRICTION	MODEL/RESTRICTION	MODEL/RESTRICTION	FROM-TO
50-744B B481-50-744	8	GROMMET,SCREW			
51-SAX NA01-51-SAX	1	MOTOR(R),RETRACTABLE HEAD			
51-SA5 NA01-51-SA5	2	ROD,RETRACTABLE			
51-SA7 NA01-51-SA7	1	BRACKET,CLIP			
51-SA8 NA01-51-SA8	6	WASHER			
51-SBX NA01-51-SBX	1	MOTOR(L),RETRACTABLE HEAD			
51-SC6 KA01-51-SC6	4	NUT,STOPPER-LAMP HINGE			
51-SE1 NA01-51-SE1	1	PROTECTOR(R),RETRA H/L			
51-SE2 NA01-51-SE2	1	PROTECTOR(L),RETRA. H/L			
51-SJ2 NA01-51-SJ2	2	PROTECTOR(L),RETRA. FRONT			
51-SJ3 NA01-51-SJ3	6	CLIP			
51-SK2 NA01-51-SK2	1	PROTECTOR(L),RETRA. SIDE			
51-S25 BS34-51-S25 A (BS34-51-S25A)	8	BOLT,LAMP LID			0C21-1212
BS34-51-S25A	8				1212-

0C21 NA35**-222968
1212 NA35**-229419

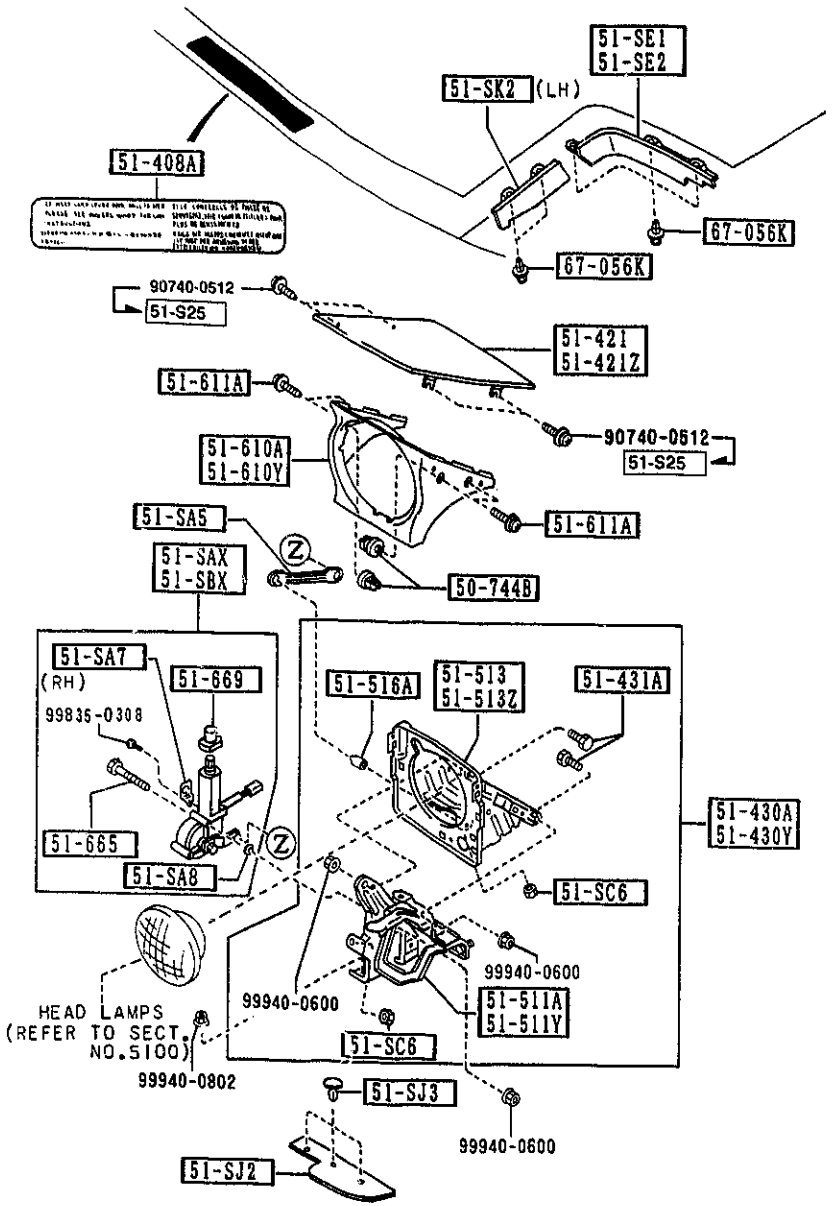

PART NO.	QTY	MODEL/RESTRICTION	MODEL/RESTRICTION	MODEL/RESTRICTION	FROM-TO
51-408A NA04-51-S02	1	LABEL,CAUTION-RETRACTABLE			
51-421 NA01-51-SH1B	1	LID(R),LAMP			
51-421Z NA01-51-SH2B	1	LID(L),LAMP			
51-430A NA01-51-SC0B	1	HINGE(R),LID-LAMP			
51-430Y NA01-51-SD0B	1	HINGE(L),LID-LAMP			
51-431A KA01-51-SD7	4	BOLT,HINGE			
51-511A NA01-51-SC1A	1	BRACKET(R),HINGE-LAMP LID			
51-511Y NA01-51-SD1A	1	BRACKET(L),HINGE-LAMP LID			
51-513 NA01-51-SC5B	1	HOUSING(R),LAMP-LID HINGE			
51-513Z NA01-51-SD5B	1	HOUSING(L),LAMP-LID HINGE			
51-516A KA01-51-SD6	2	CAP,HINGE-H.L.RETRACTABLE			
51-610A NA01-50-741	1	BEZEL(R),HEAD LAMP			
51-610Y NA01-50-751	1	BEZEL(L),HEAD LAMP			
51-611A B481-50-75X	8	SCREW,HEAD LAMP BEZEL			

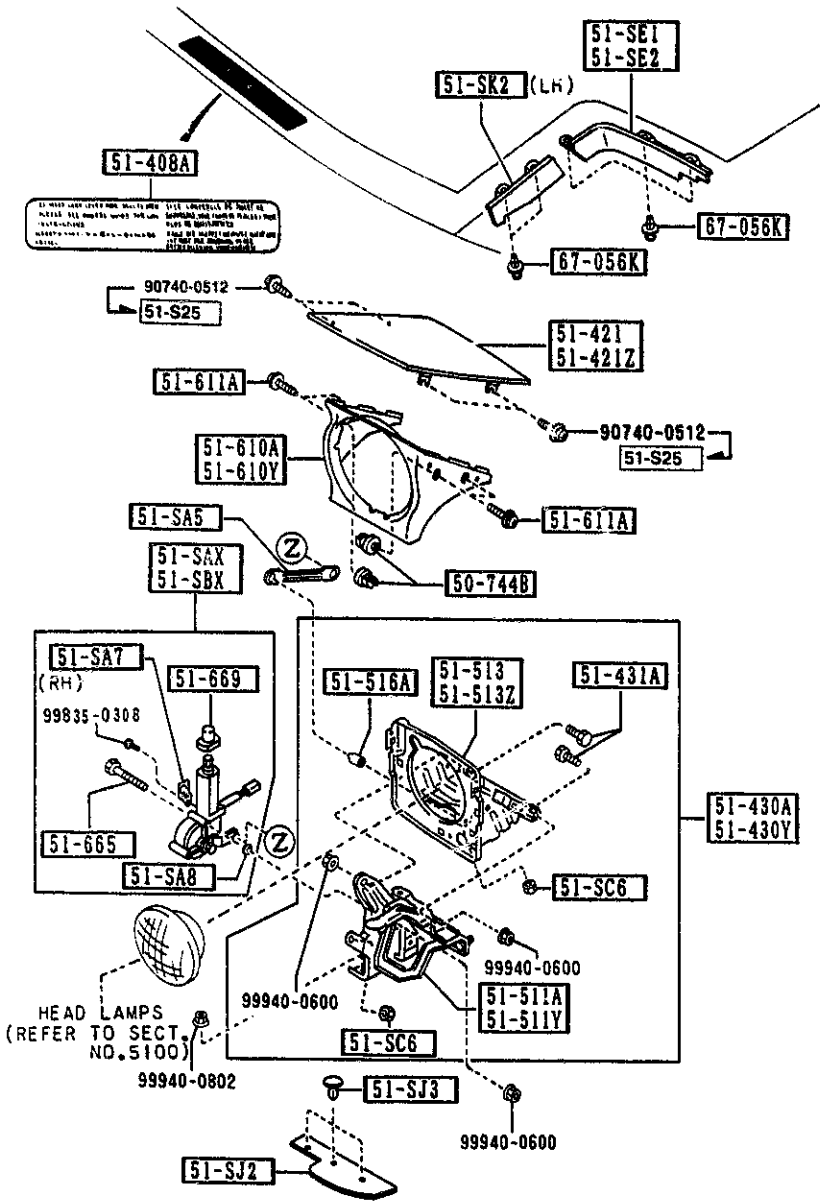

PART NO.	QTY	MODEL/RESTRICTION	MODEL/RESTRICTION	MODEL/RESTRICTION	FROM-TO
51-665		BOLT,MOTOR-RETRACT H /LAMP			
FB01-51-665	6				
51-669		BOOT,MOTOR-RETRACT H /L			
NA01-51-669	2				
67-056K		RIVET			
UB39-50-795	8				

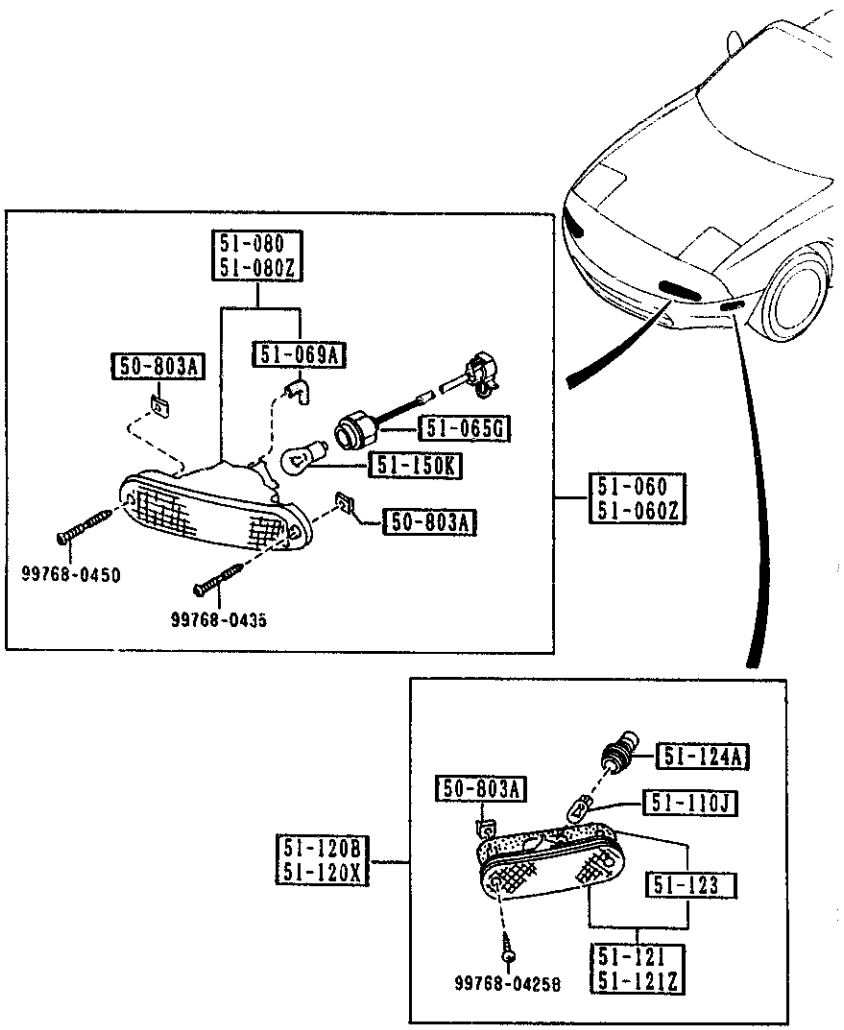

PART NO.	QTY	MODEL/RESTRICTION	MODEL/RESTRICTION	MODEL/RESTRICTION	FROM-TO
50-803A G158-50-803	8	NUT,SIDE PROTECTOR			
51-060 8BN1-51-060	1	LAMP SET(R),FRT COMB			
51-060Z 8BN1-51-070	1	LAMP SET(L),FRT COMB			
51-065G NA01-51-064	2	SOCKET,F. COMB. LAMP			
51-069A NA01-51-069	2	TUBE,HEAD LAMP			
51-080 NA01-51-06XA	1	LENS & HOUSING(R)			
51-080Z NA01-51-07XA	1	LENS & HOUSING(L)			
51-110J 99701-6038	2	BULB 12V 3.8W			
51-120B 8BN1-51-120	1	LAMP SET(R),SIDE TURN			
51-120X 8BN1-51-130	1	LAMP SET(L),SIDE TURN			
51-121 NA01-51-5EX A (NA01-51-5EXA)	1	LENS & BODY(R)			-1201
NA01-51-5EXA	1				1201-
51-121Z NA01-51-5FX A (NA01-51-5FXA)	1	LENS & BODY(L)			-1201
NA01-51-5FXA	1				1201-

1201 NA35**-228219

AUNA02

CAT. AUNA02-07

1993-12

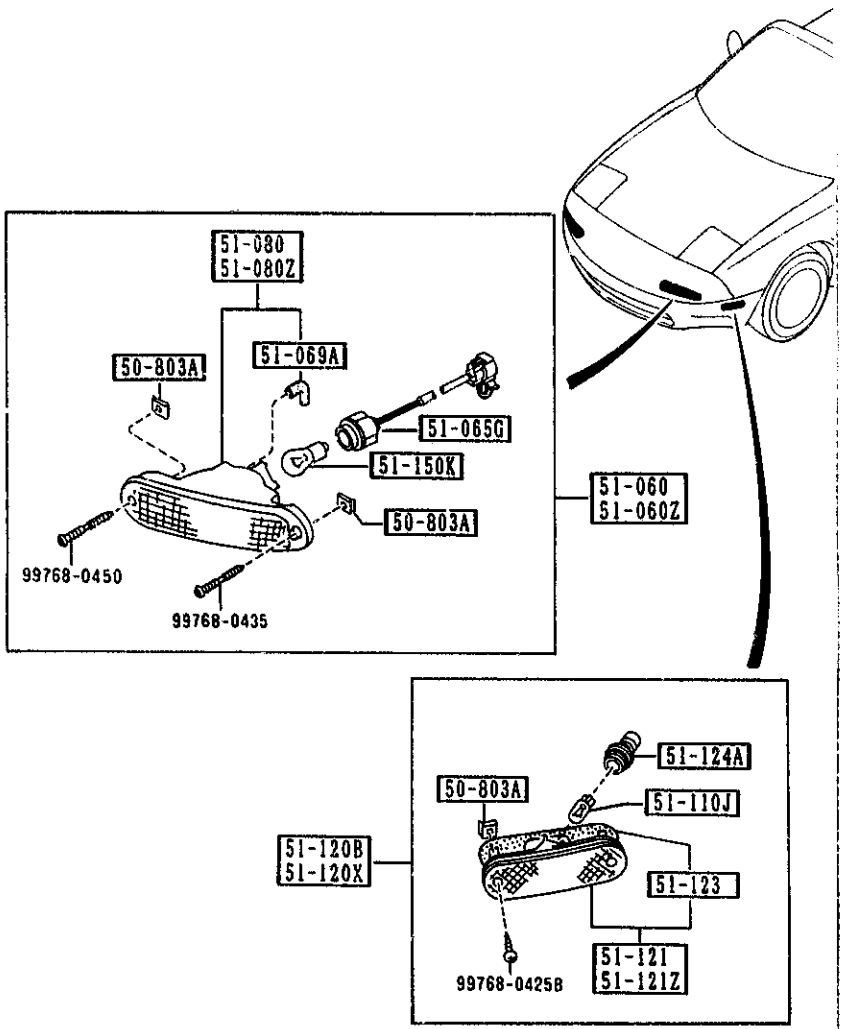

PART NO.	QTY	MODEL/RESTRICTION	MODEL/RESTRICTION	MODEL/RESTRICTION	FROM-TO
51-123		GASKET,SIDE TURN			
NA01-51-5D3 A (NA01-51-5D3A)	2				-1201
NA01-51-5D3A	2				1201-
51-124A		SOCKET,SIDE TURN			
NA01-51-5E2	2				
51-150K		BULB			
99701-4278Y	2	A12V 27/8W			

1201 NA35**-228219

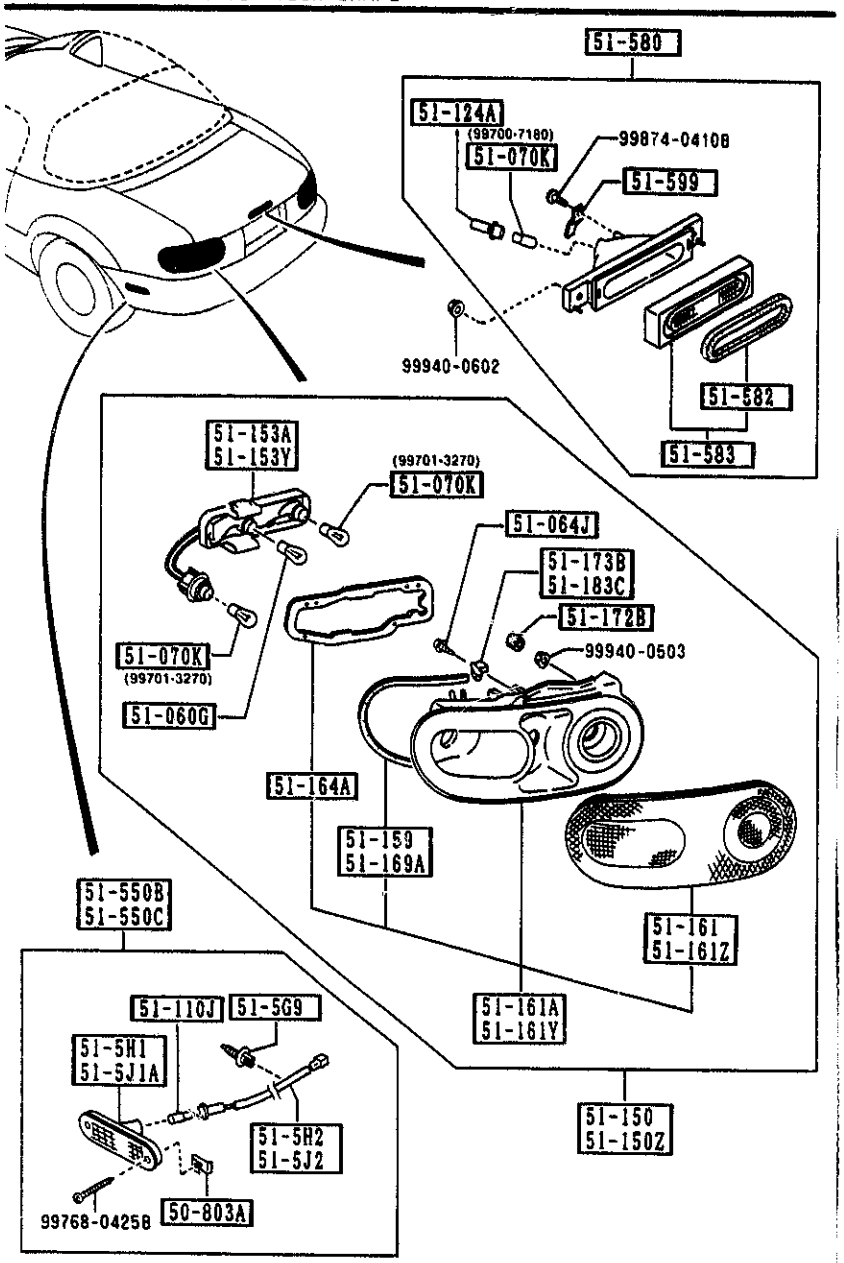

AUNA02

PART NO.	QTY	MODEL/RESTRICTION	MODEL/RESTRICTION	MODEL/RESTRICTION	FROM-TO
50-803A G158-50-803	4	NUT,SIDE PROTECTOR			
51-060G 99701-4278	2	BULB 12V 27W/8W			
51-064J NA01-51-1E6	2	SCREW,TAPPING			
51-070K 99700-7180	1	BULB A12V 18.4W			
99701-3270	4	12V 27W			
51-110J 99701-6038	2	BULB 12V 3.8W			
51-124A BJ38-51-584	1	SOCKET,SIDE TURN			
51-150 8BN1-51-150	1	LAMP SET(R),RR.COMB.			
51-150Z 8BN1-51-160	1	LAMP SET(L),RR.COMB.			
51-153A N001-51-155A	1	SOCKET(R),RR.COMB.			
51-153Y N001-51-165A	1	SOCKET(L),RR.COMB.			
51-159 NA01-51-159	1	PROTECTOR(R),'A'			
51-161 NA01-51-15XB	1	LENS(R),RR.COMB.			
51-161A		LENS & BODY(R),RR COMB.			

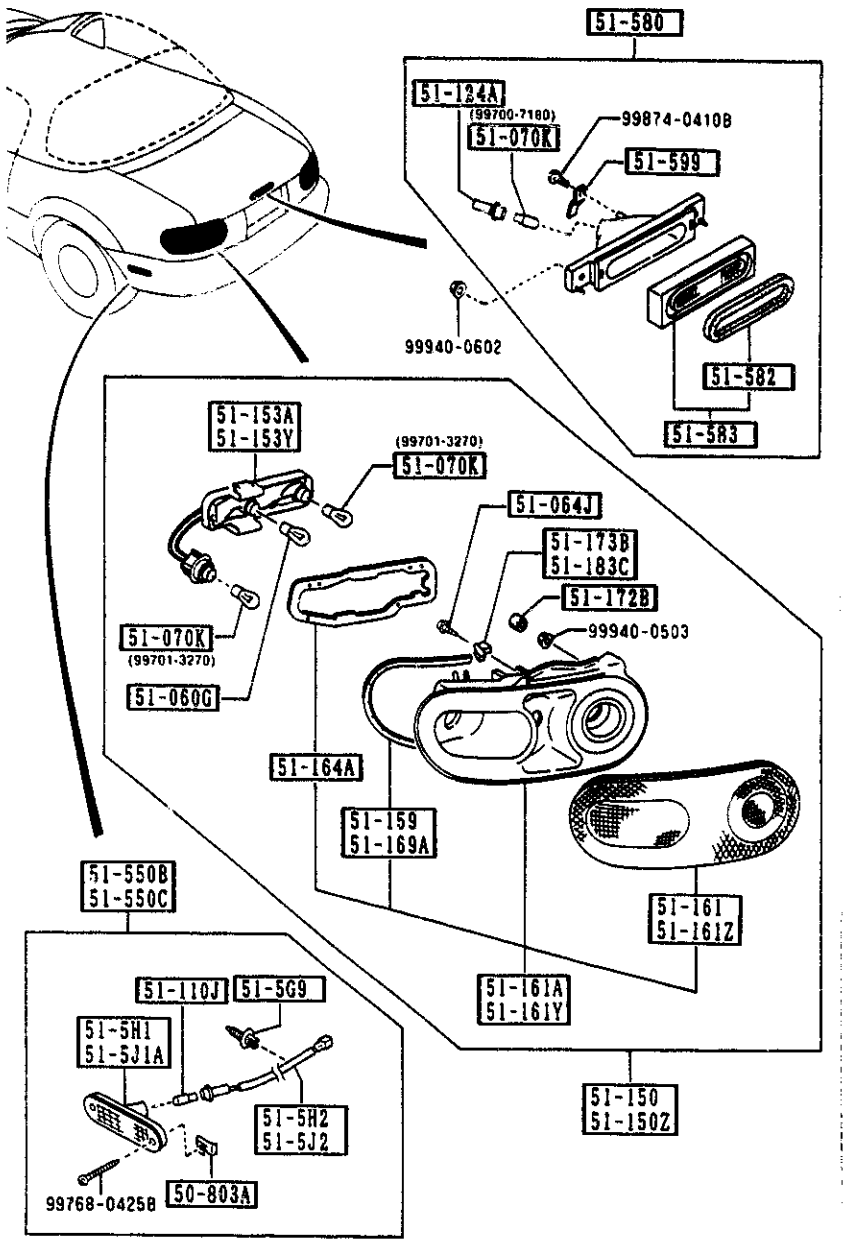

PART NO.	QTY	MODEL/RESTRICTION	MODEL/RESTRICTION	MODEL/RESTRICTION	FROM-TO
CONT'D					
NA01-51-170B	1				
51-161Y		LENS & BODY(L),RR COMB.			
NA01-51-180B	1				
51-161Z		LENS(L),RR.COMB.			
NA01-51-16XB	1				
51-164A		GASKET,RR.COMB.			
NA01-51-158	4				
51-169A		PROTECTOR(L),'A'			
NA01-51-169	1				
51-172B		CAP			
G030-51-172	3				
51-173B		PROTECTOR(R),'B'			
NA01-51-173	1				
51-183C		PROTECTOR(L),'B'			
NA01-51-183	1				
51-5G9		CLIP			
NA01-51-5G9	8				
51-5H1		LENS & BODY(R),RR SIDE TURN			
NA01-51-5H1B A (NA01-51-5H1C)	1				-1201
NA01-51-5H1C	1				1201-
51-5H2		SOCKET(R),RR SIDE TURN			
NA01-51-5H2A	1				
51-5J1A		LENS & BODY(L),RR SIDE TURN			
NA01-51-5J1B A (NA01-51-5J1C)	1				-1201
NA01-51-5J1C	1				1201-
51-5J2		SOCKET(L),RR SIDE TURN			
NA01-51-5J2A	1				

1201 NA35**-228219

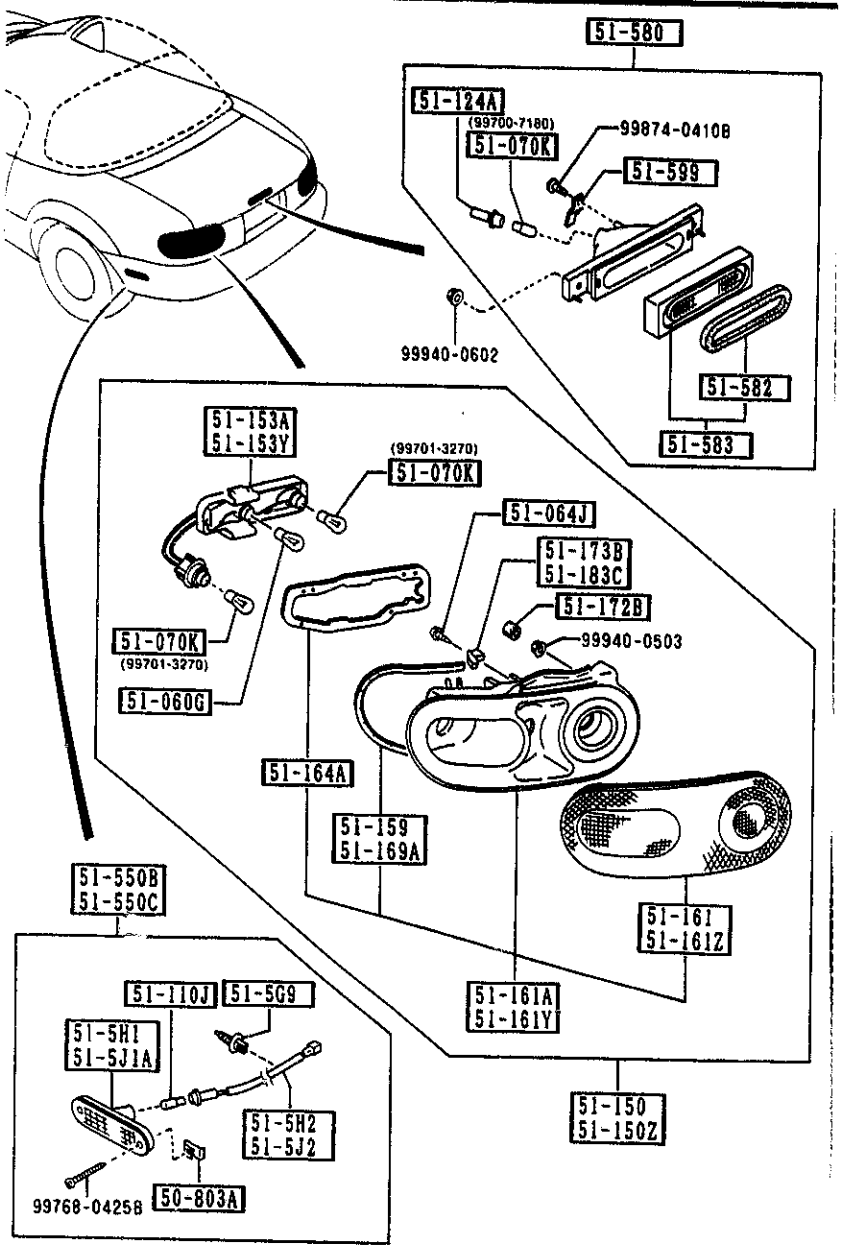

AUNA02

PART NO.	QTY	MODEL/RESTRICTION	MODEL/RESTRICTION	MODEL/RESTRICTION	FROM-TO
51-550B 8BN1-51-550	1	LAMP SET(R),SIDE TURN-RR			
51-550C 8BN1-51-560	1	LAMP SET(L),SIDE TURN-RR			
51-580 NA01-51-580B	1	LAMP,STOP-HI.MOUNT.			
51-582 NA01-51-592B	1	GASKET,STOP LAMP-HI.MOUNT			
51-583 NA01-51-58XA	1	LENS,STOP LAMP-HI.MOUNT			
51-599 NA01-51-599	1	FASTENER,STOP LAMP-HI.			

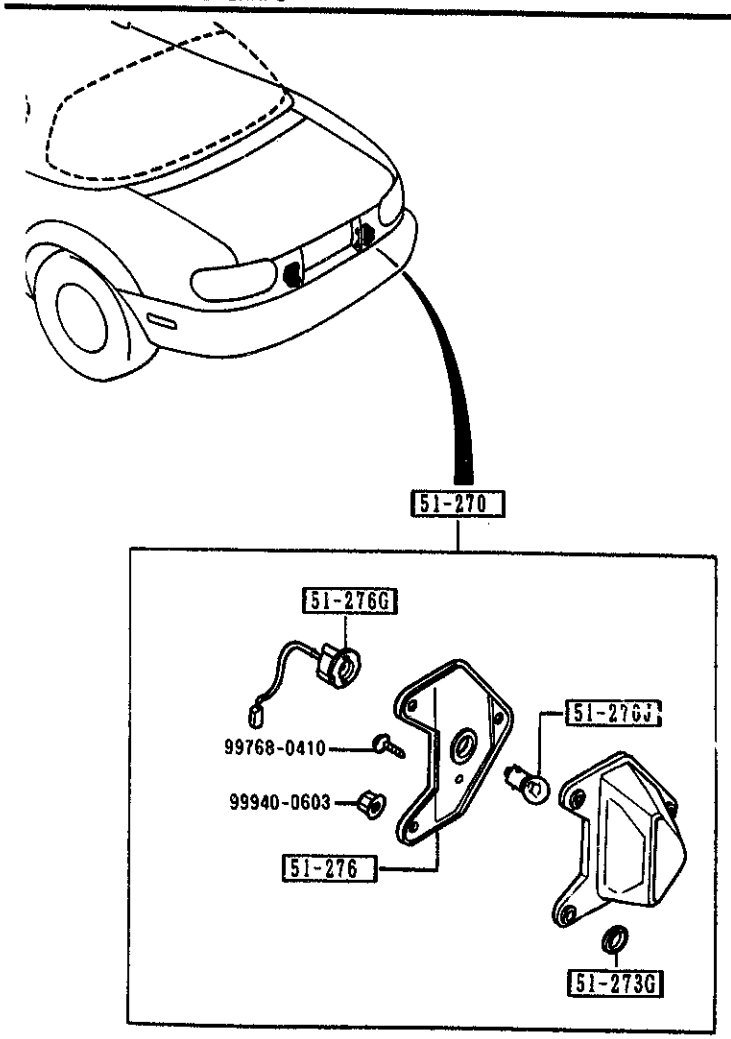

5120 -1 * LICENSE LAMPS

PART NO.	QTY	MODEL/RESTRICTION	MODEL/RESTRICTION	MODEL/RESTRICTION	FROM-TO
51-270		LAMP,LICENSE			
8BF1-51-270	2				
51-270J		BULB			
99701-2070	2	12V 7.5W			
51-273G		GASKET,LICENSE LAMP			
FB67-51-273	2				
51-276		SHADE,LAMP-LICENSE			
FB67-51-276	2				
51-276G		SOCKET,LICENSE LAMP			
FB67-51-272	2				

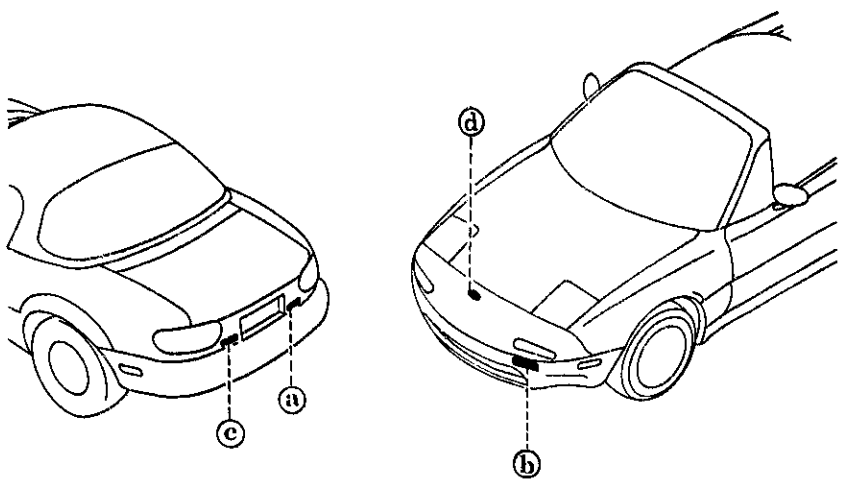

ⓐ 51-711B



ⓒ 51-781



ⓑ 51-711C



ⓓ 51-711A

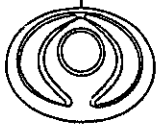

PART NO.	QTY	MODEL/RESTRICTION	MODEL/RESTRICTION	MODEL/RESTRICTION	FROM-TO
51-711A		ORNAMENT,FRONT			
*BB1H-51-731	1				2513-
51-711B		ORNAMENT,MAKER NAME-REAR			
NA01-51-711	1				
51-711C		ORNAMENT,MAKER NAME-FRONT			
NA04-51-711	1				-2513
14	EXT-	DU FU HU SU UC LIGHT GRAY			
18	EXT-	3L DARK GRAY			
51-781		ORNAMENT,REAR			
NA01-51-721	1				

2513 NA35**-327330

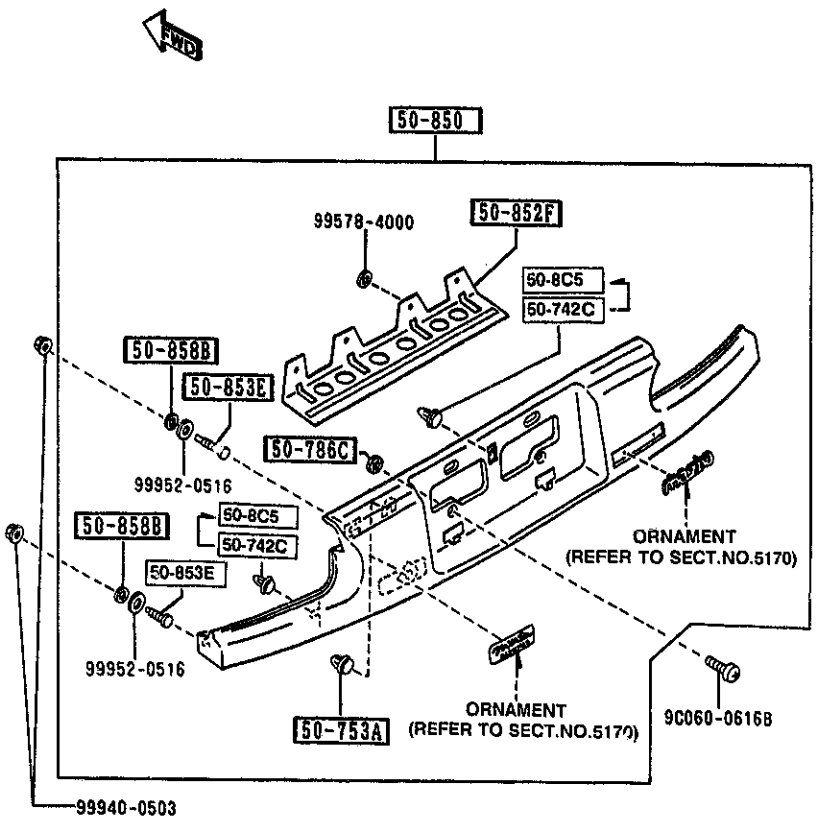

PART NO.	QTY	MODEL/RESTRICTION	MODEL/RESTRICTION	MODEL/RESTRICTION	FROM-TO
50-742C		CLIP			
G043-50-742	3				-0801
50-753A		FASTENER			
G043-50-753	4				
50-786C		GASKET			
G030-50-786	2				
50-8C5		CLIP			
B467-50-8C5	3				0B01-
50-850		FINISHER,REAR			
NA01-50-850D G (NA01-50-850E)	1				-0801
DU		MARINER BLUE			
HU		NEO GREEN			
SU		CLASSIC RED			
UC		CRYSTAL WHITE			
3L		SILVER STONE METALLIC			
NA01-50-850E	1				0801-1801
DU	EXT-	DU MARINER BLUE			
HU	EXT-	HU NEO GREEN			
SU	EXT-	SU CLASSIC RED			
UC	EXT-	UC CRYSTAL WHITE			
3L	EXT-	3L SILVER STONE METALLIC			
NA01-50-850G	1				1801-
DU	EXT-	DU MARINER BLUE			
HU	EXT-	HU NEO GREEN			
HZ	EXT-	HZ SUNBURST YELLOW			
PZ	EXT-	PZ BRILLIANT BLACK			
SU	EXT-	SU CLASSIC RED			
UC	EXT-	UC CRYSTAL WHITE			
3L	EXT-	3L SILVER STONE METALLIC			

0801 NA35**-205068
0B01 NA35**-217311
1801 NA35**-300014

5180 -2 * REAR FINISHER

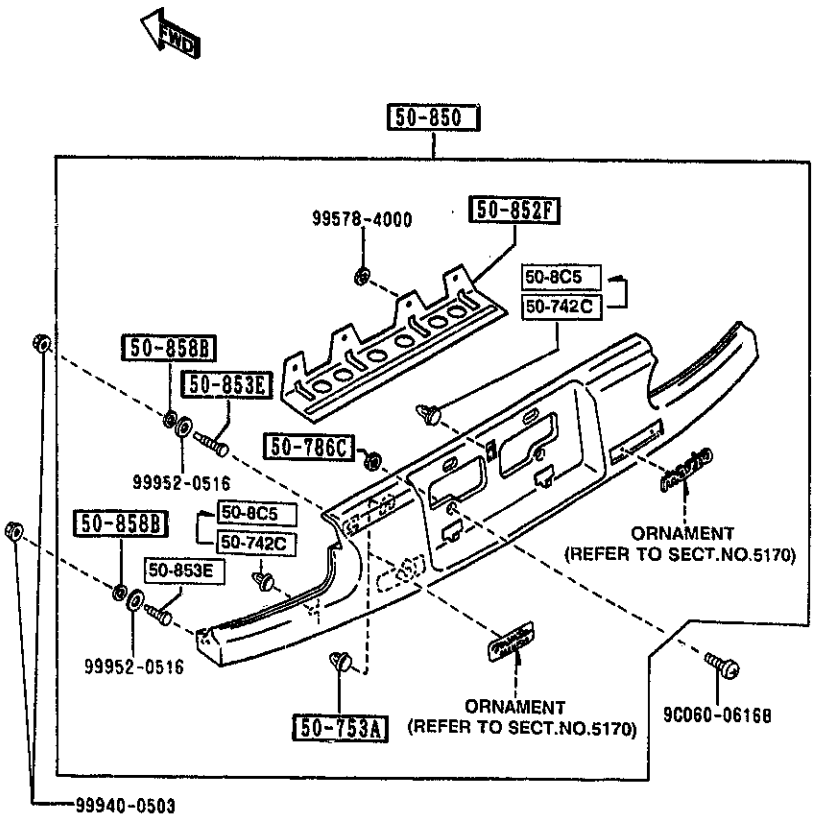

PART NO.	QTY	MODEL/RESTRICTION	MODEL/RESTRICTION	MODEL/RESTRICTION	FROM-TO
50-852F NA01-50-852	1	REINFORCEMENT			
50-853E LA01-50-853	4	BOLT,GARNISH-RR			
50-858B B388-50-855	4	GASKET,REAR FINISHER			

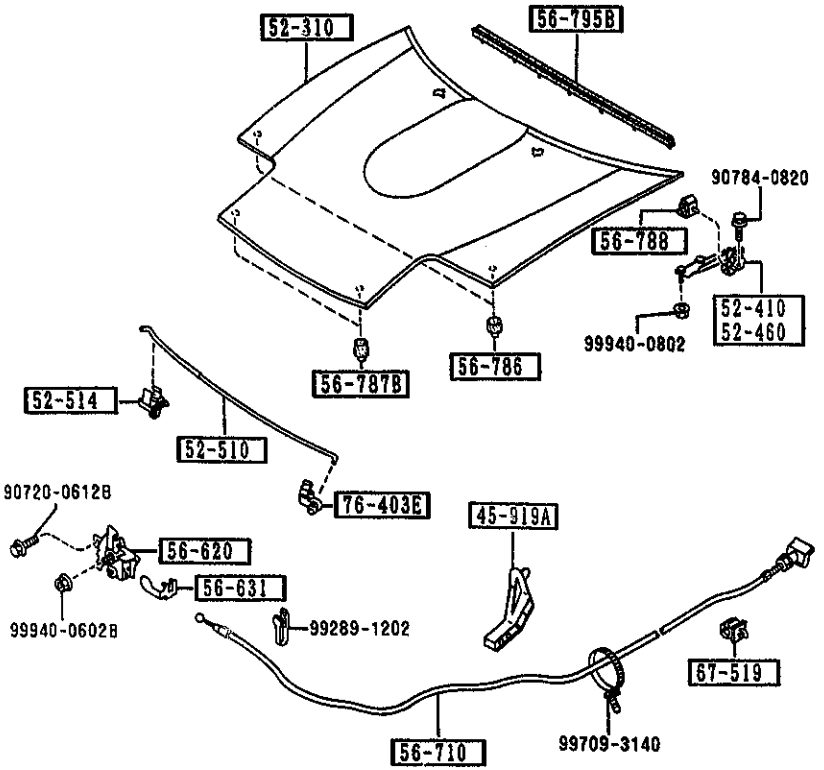

PART NO.	QTY	MODEL/RESTRICTION	MODEL/RESTRICTION	MODEL/RESTRICTION	FROM-TO
45-919A		HOLDER,PIPE			
H115-45-916A	1				
52-310		BONNET			
NAY1-52-310A A (NAY1-52-310B)	1				-1601
NAY1-52-310B	1				1601-
52-410		HINGE(R),BONNET			
NA01-52-410A	1				
52-460		HINGE(L),BONNET			
NA01-52-420A	1				
52-510		STAY,BONNET			
NA01-56-650	1				
52-514		HOLDER,ROD			
G030-56-693	1				
56-620		LOCK,BONNET			
NA01-56-620A	1				
56-631		FASTENER,BONNET RELEASE			
LA01-56-631	1				
56-710		WIRE,RELEASE-BONNET			
NA01-56-720C A (NA01-56-720D)	1				-0801
NA01-56-720D	1				0801-
00	INT-	NAC NA1 NA2 BLACK			
56-786		RUBBER(C),CUSHION-BONNET			
NA01-56-787	2				
56-787B		RUBBER,CUSHION-BONNET FRT			
FB01-56-787A	2				
56-788		RUBBER,CUSHION-BONNET RR			
NA01-56-78X	2				

0801 NA35**-205068
1601 NA35**-235561

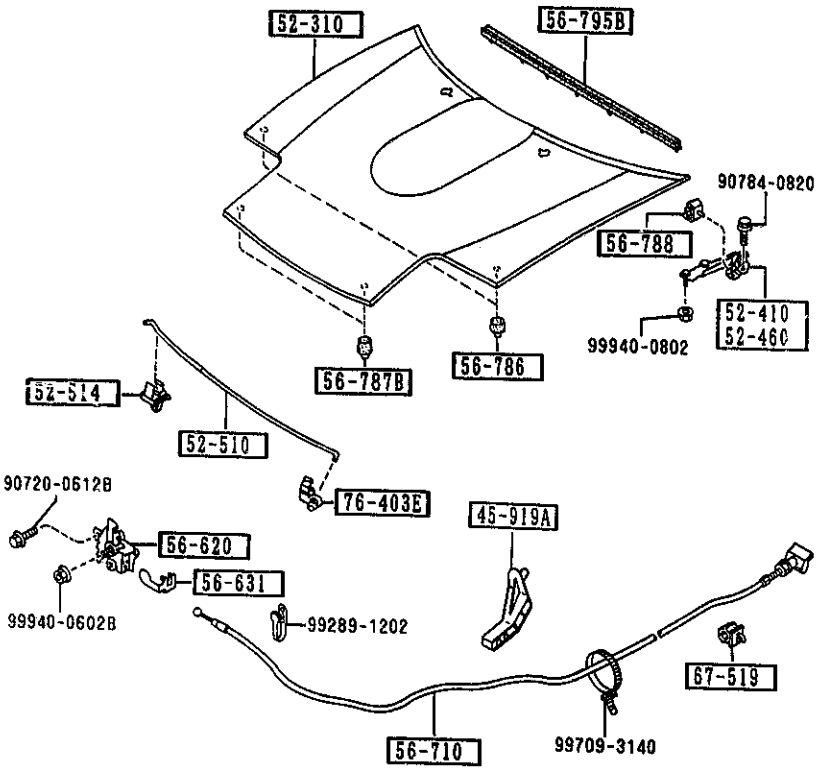

PART NO.	QTY	MODEL/RESTRICTION	MODEL/RESTRICTION	MODEL/RESTRICTION	FROM-TO
56-795B		WEATHERSTRIP,BONNET-REAR			
NA01-56-760	1				
67-519		CLIP,PIPE			
G030-67-519	1				
76-403E		HOLDER,ROD			
B092-52-518	1				

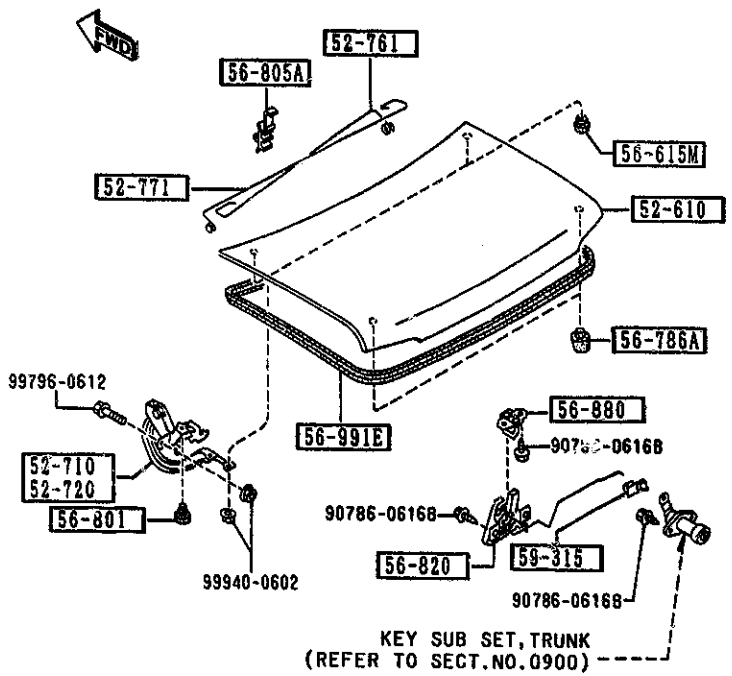

PART NO.	QTY	MODEL/RESTRICTION	MODEL/RESTRICTION	MODEL/RESTRICTION	FROM-TO
52-610		LID,TRUNK			
NAY1-52-610 AN(NAY1-52-610A)	1				-0A01
NAY1-52-610A A (NAY1-52-610B)	1				0A01-1601
NAY1-52-610B	1				1601-
52-710		HINGE(R),TRUNK LID			
NA01-52-710A	1				
52-720		HINGE(L),TRUNK LID			
NA01-52-720A	1				
52-761		SPRING(R),BALANCE			
NA01-52-791A	1				
52-771		SPRING(L),BALANCE			
NA01-52-792A	1				
56-615M		PLUG,DRAIN			
NA01-56-051	2				
56-786A		RUBBER,CUSHION			
B481-56-786	2				
56-801		CUSHION,LID HINGE			
NA01-56-803	2				
56-805A		HOLDER,BALANCE SPRING			
NA01-56-805	1				
56-820		LOCK,LID			
NA01-56-820A	1				-1801
N007-56-820	1				1801-
56-880		STRIKER,LID			
NA01-56-840	1				
56-991E		WEATHERSTRIP,LID			
NA01-56-951	1				

0A01 NA35**-213219
1601 NA35**-235561
1801 NA35**-300014

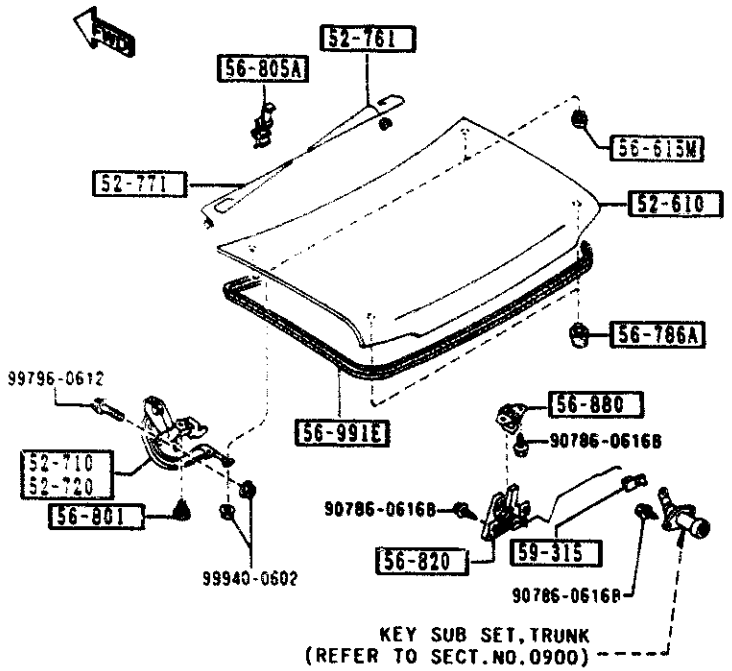

PART NO.	QTY	MODEL/RESTRICTION	MODEL/RESTRICTION	MODEL/RESTRICTION	FROM TO
59-315		CLIP			
G030-59-315	1				

5310 -1 * FRONT PANELS

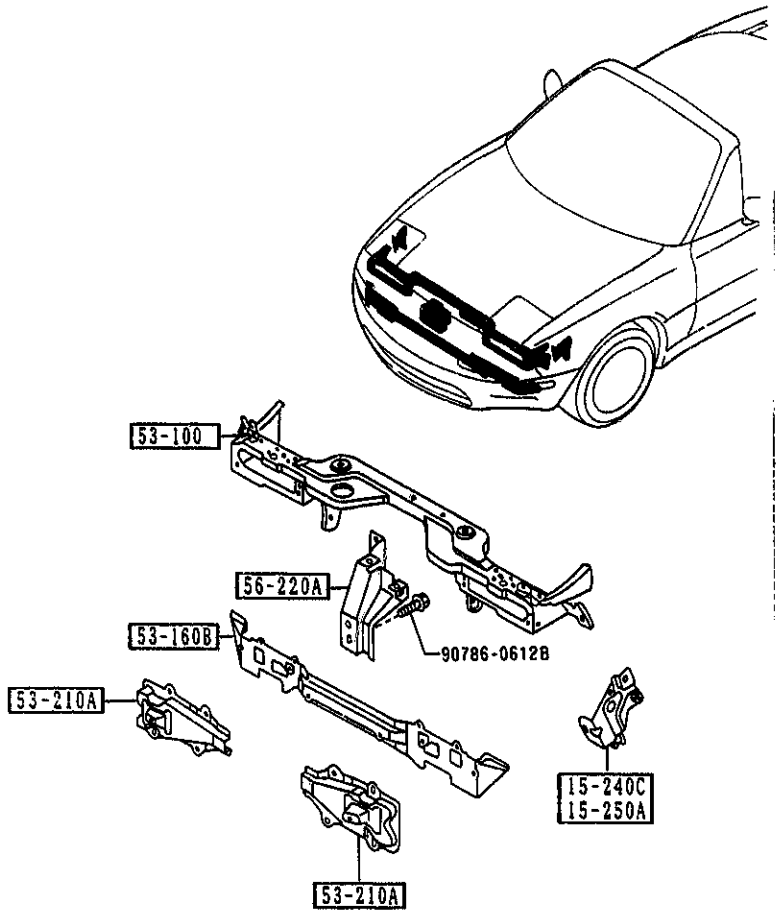

PART NO.	QTY	MODEL/RESTRICTION	MODEL/RESTRICTION	MODEL/RESTRICTION	FROM-TO
15-240C B61P-15-240	1	BRACKET(R),RADIATOR			
15-250A B61P-15-250	1	BRACKET(L),RADIATOR			
53-100 NA01-53-100F	1	PANEL,RAD.SHROUD			
53-160B NA01-53-16XC	1	MEMBER,CROSS			
53-210A NA01-54-180	2	BRACKET,BUMPER			
56-220A NA01-56-221B	1	STAY,LOCK-BONNET			

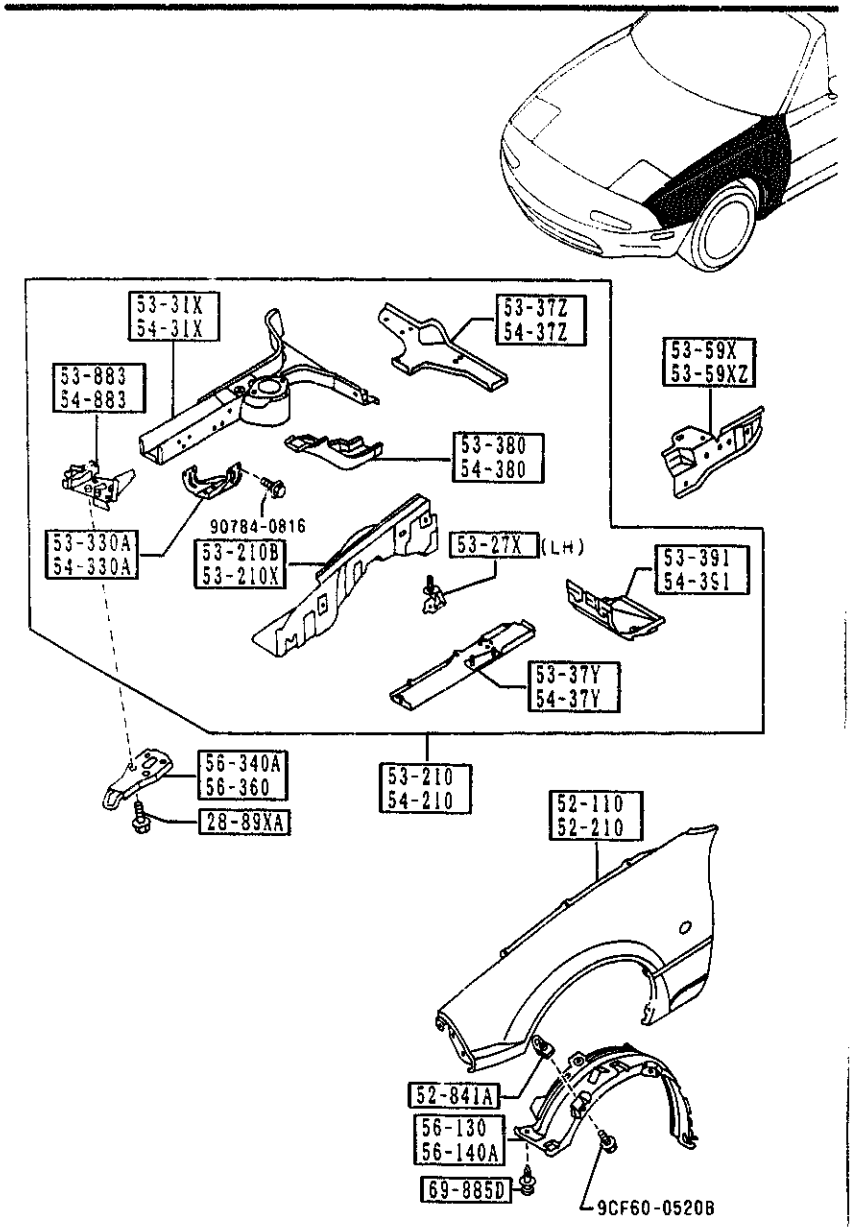

PART NO.	QTY	MODEL/RESTRICTION	MODEL/RESTRICTION	MODEL/RESTRICTION	FROM-TO
28-89XA GJ21-28-89X	6	BOLT,CROSS MEMBER			
52-110 NAY1-52-110	1	PANEL(R),FENDER-FRT.			
52-210 NAY1-52-210	1	PANEL(L),FENDER-FRT.			
52-841A LA01-56-135	10	NUT,CLIP			
53-210 NAY1-53-200B A (NAY1-53-200D)	1	PANEL(R),WHEEL APRON			-0A01
NAY1-53-200D	1				0A01-
53-210B NA01-53-210B A (NA01-53-210E)	1	PANEL(R),WHEEL APRON			-0A01
NA01-53-210E	1				0A01-
53-210X NA01-54-210B A (NA01-54-210D)	1	PANEL(L),WHEEL APRON			-0A01
NA01-54-210D AN(NA01-54-210E)	1				0A01-1423
NA01-54-210E A (NA01-54-210F)	1				1423-1801
NA01-54-210F	1				1801-
53-27X NA01-54-36X	1	BRKT,AIR CLNR-WHL APRON			
53-31X *NA01-53-31XE	1	FRAM(R),FRONT			
53-330A NA01-53-330	1	BRACKET(R),STABILIZER			
53-37Y NA01-53-37Y	1	FRAME(UP.,R),FRONT-FRT			

0A01 NA35**-213219
1423 NA35**-233585
1801 NA35**-300014

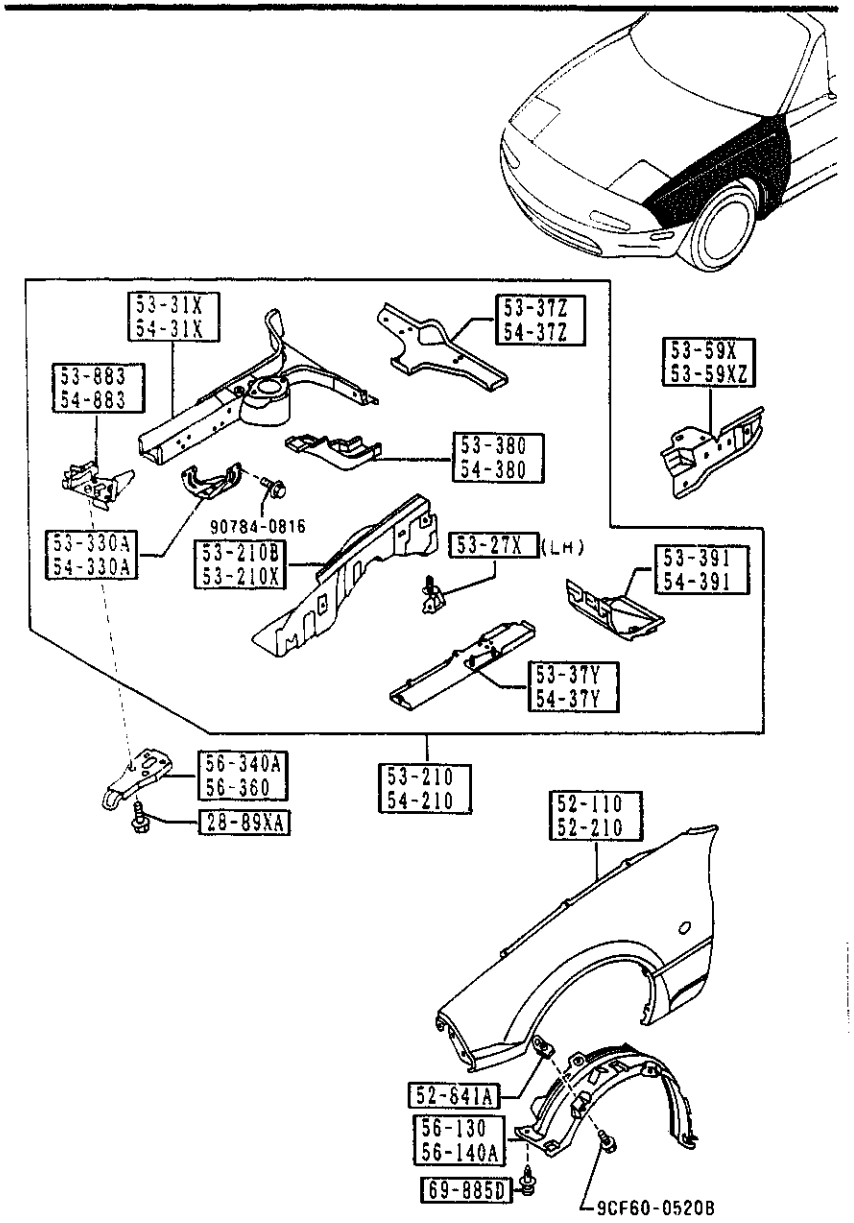

PART NO.	QTY	MODEL/RESTRICTION	MODEL/RESTRICTION	MODEL/RESTRICTION	FROM-TO
53-37Z		FRAME(UP.R),FRONT-REAR			
NA01-53-37ZA	1				
53-380		REINFORCEMENT(R)			
NA01-53-380	1				
53-391		BOX(R),TORQUE			
NA01-53-391	1				
53-59X		REINF.(R),WHEEL APRON			
NA01-53-591	1				
53-59XZ		REINF.(L),WHEEL APRON			
NA01-54-590	1				
53-883		REINF.(R),TIE DOWN HOOK			
NA01-53-32XB	1				
54-210		PANEL(L),WHEEL APRON			
NAY1-54-200B A (NAY1-54-200D)	1				-0A01
NAY1-54-200D	1				0A01-
54-31X		FRAM(L),FRONT			
*NA01-54-31XE	1				
54-330A		BRACKET(L),STABILIZER			
NA01-54-330	1				
54-37Y		FRAME(UP.,L),FRONT-FRT			
NA01-54-37Y	1				
54-37Z		FRAME(UP.L),FRONT-REAR			
NA01-54-37ZA	1				
54-380		FRAME(L),FRONT-REAR			
NA01-54-380 A (NA01-54-380B)	1				-1801
NA01-54-380B	1				1801-
54-391		BOX(L),TORQUE			

0A01 NA35**-213219
1801 NA35**-300014

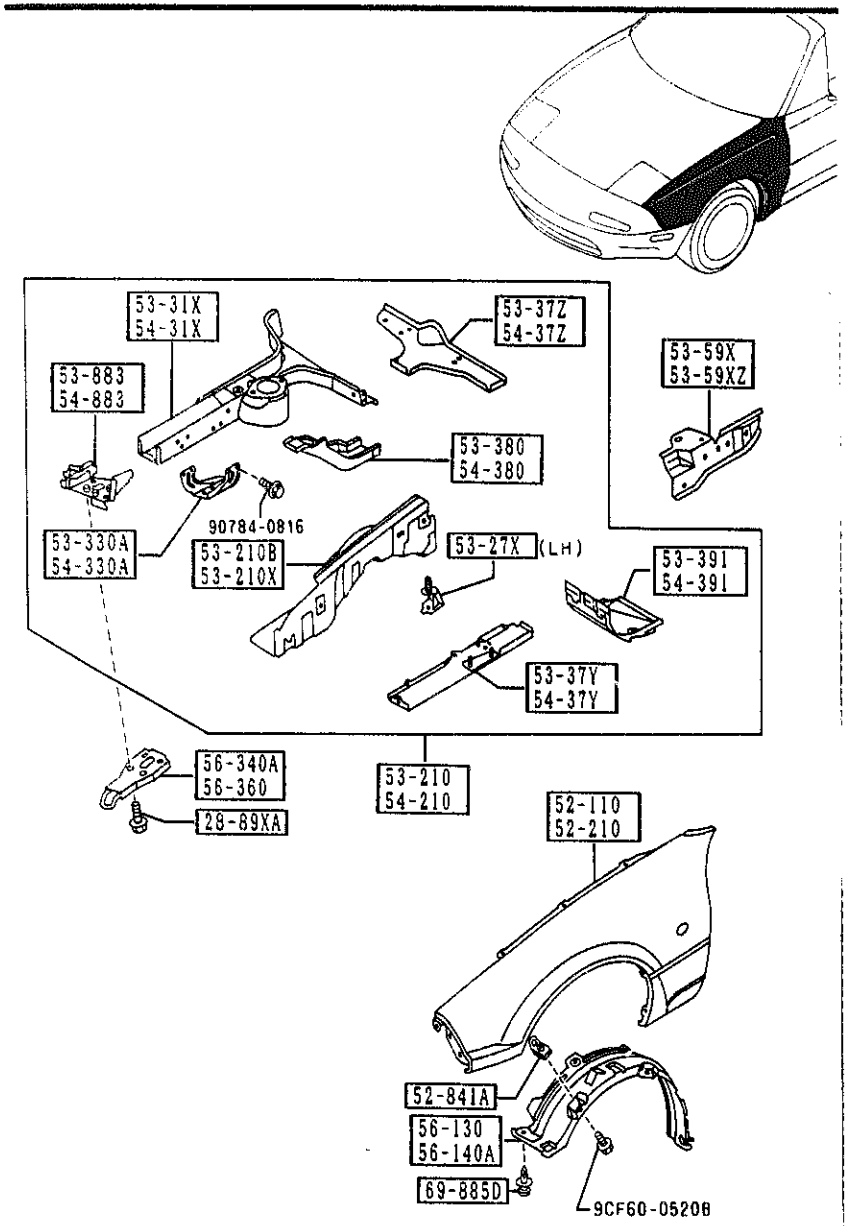

PART NO.	QTY	MODEL/RESTRICTION	MODEL/RESTRICTION	MODEL/RESTRICTION	FROM-TO
CONT'D					
NA01-54-391	1				
54-883		REINF.(L),TIE DOWN HOOK			
NA01-54-32XC	1				
56-130		GUARD(R),MUD			
NA01-56-131A	1				
56-140A		GUARD(L),MUD			
NA01-56-141C	1				
56-340A		HOOK(R),TIE DOWN-FRONT			
NA01-56-34XC	1				
56-360		HOOK(L),TIE DOWN-FRONT			
NA01-56-34YC	1				
69-885D		FASTENER			
NA01-56-145	10				

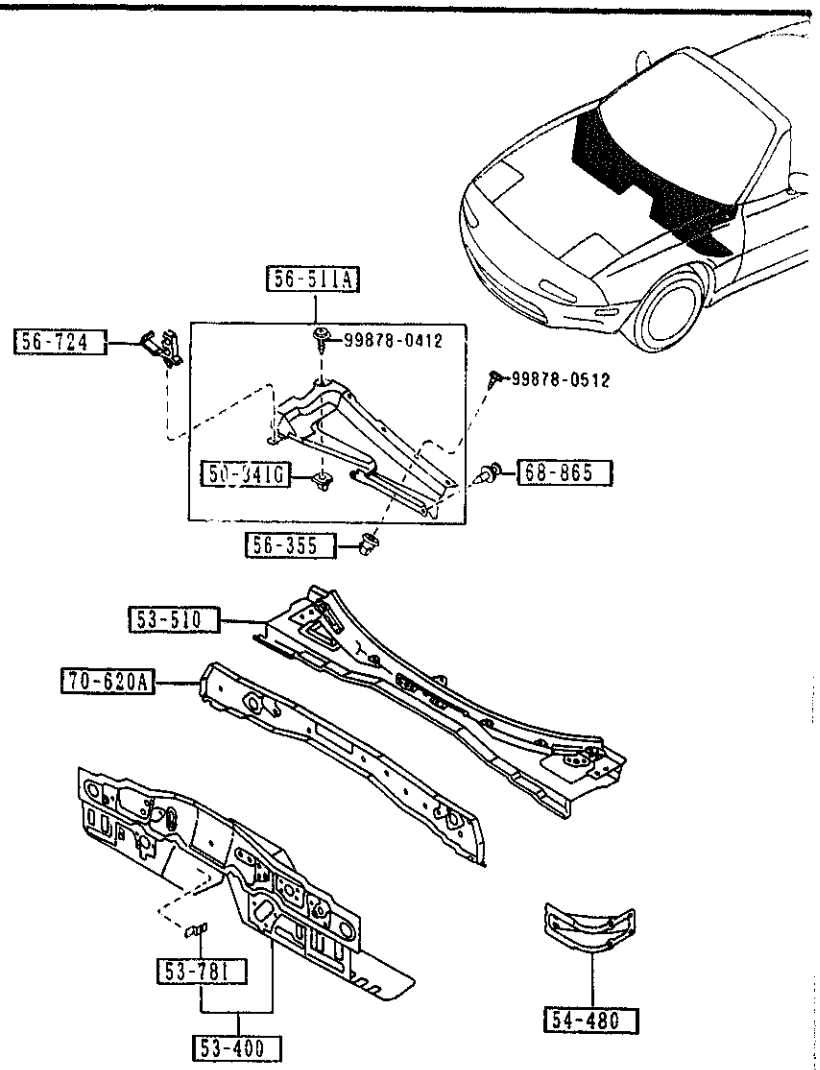

PART NO.	QTY	MODEL/RESTRICTION	MODEL/RESTRICTION	MODEL/RESTRICTION	FROM-TO
50-841G F044-51-912	1	GROMMET,SCREW			
53-400 NA01-54-400G	1	PANEL,DASH-LOWER			
53-510 NA01-53-510D	1	PANEL,DASH-UPPER			
53-781 0305-53-781A	1	BRACKET,GRILLE-C			
54-480 NA01-54-480	2	JUNCTION,DASH SIDE-S .SILL			
56-355 G211-56-355A	4	GROMMET,SCREW-BAFFLE			
56-511A NA01-56-35X	1	COVER,BAFFLE-COWL PA NEL			
56-724 H260-56-724	1	CLIP'B',WIRE-BONNET			
68-865 B040-68-865A	2	FASTENER			
00	INT-	NA0 NA1 NA2 BLACK			
70-620A NA01-7C YB	1	PANEL,COWL-FRONT			

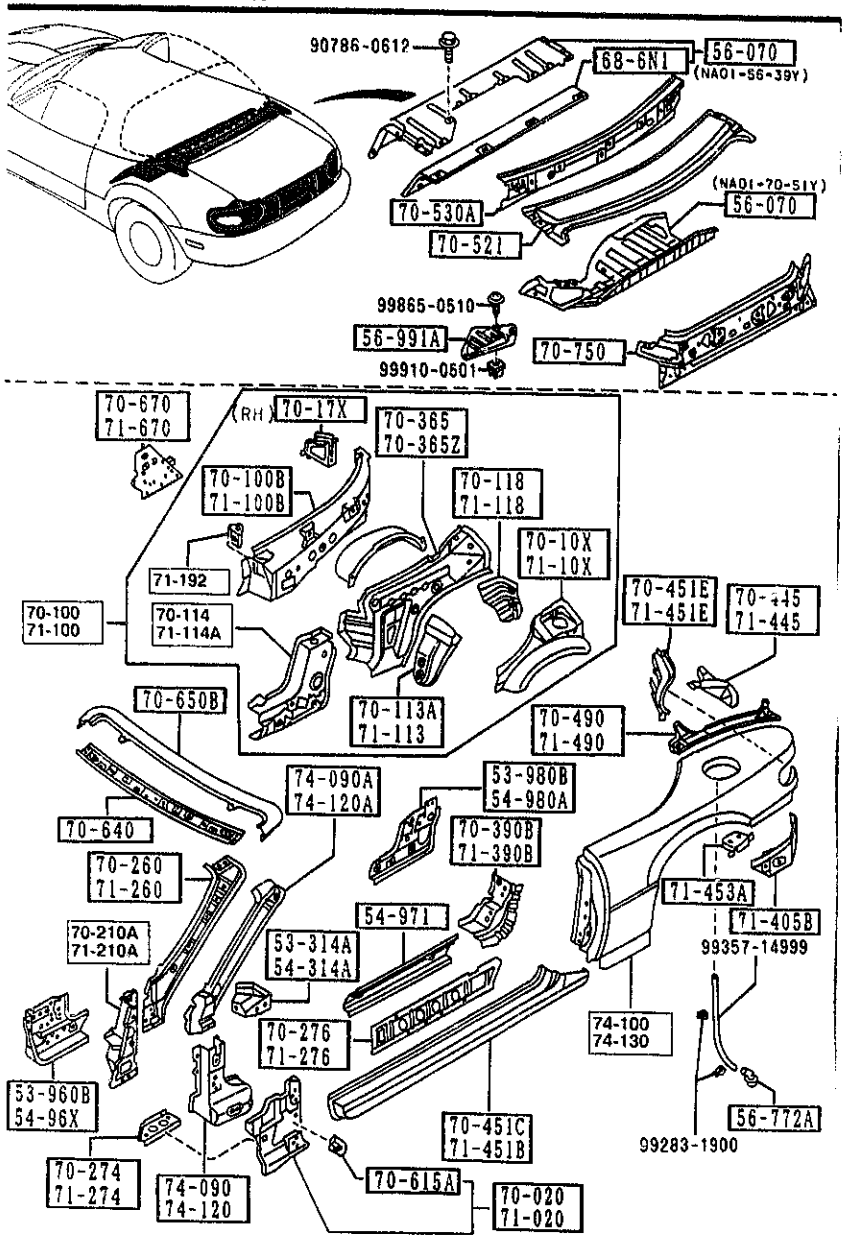

AUNA02

PART NO.	QTY	MODEL/RESTRICTION	MODEL/RESTRICTION	MODEL/RESTRICTION	FROM-TO
53-314A NA01-70-071A	1	BRACKET(R),INST.			
53-960B NA01-53-960B	1	SILL(FRT.R),SIDE-INNER			
53-980B NA01-53-980B	1	SILL(RR.R),SIDE-INNER			
54-314A NA01-71-071A	1	BRACKET(L),INST.			
54-96X NA01-54-96XB	1	SILL(FRT.L),SIDE-INNER			
54-971 NA01-54-971	2	SILL(C),SIDE-INNER			
54-980A NA01-54-980B	1	SILL(RR.L),SIDE-INNER			
56-070 NA01-56-39Y NA01-70-51Y	1 1	PANEL,BULK HEAD			
56-772A NA01-56-772	1	PIPE,DRAIN-RR FENDER			
56-991A NA01-56-971	1	COVER,SERVICE HOLE			
68-6N1 NA01-68-6N1	1	INSULATOR,BALK HEAD PANEL			
70-020 NA01-70-020B	1	PANEL(R),COWL SIDE			
70-10X NA01-70-111A A (NA01-70-111B)	1	PANEL(R),QUARTER			-1330
NA01-70-111B	1				1330-1929

1330 NA35**-232705
1929 NA35**-303526

CAT. AUNA02-07

1993-12

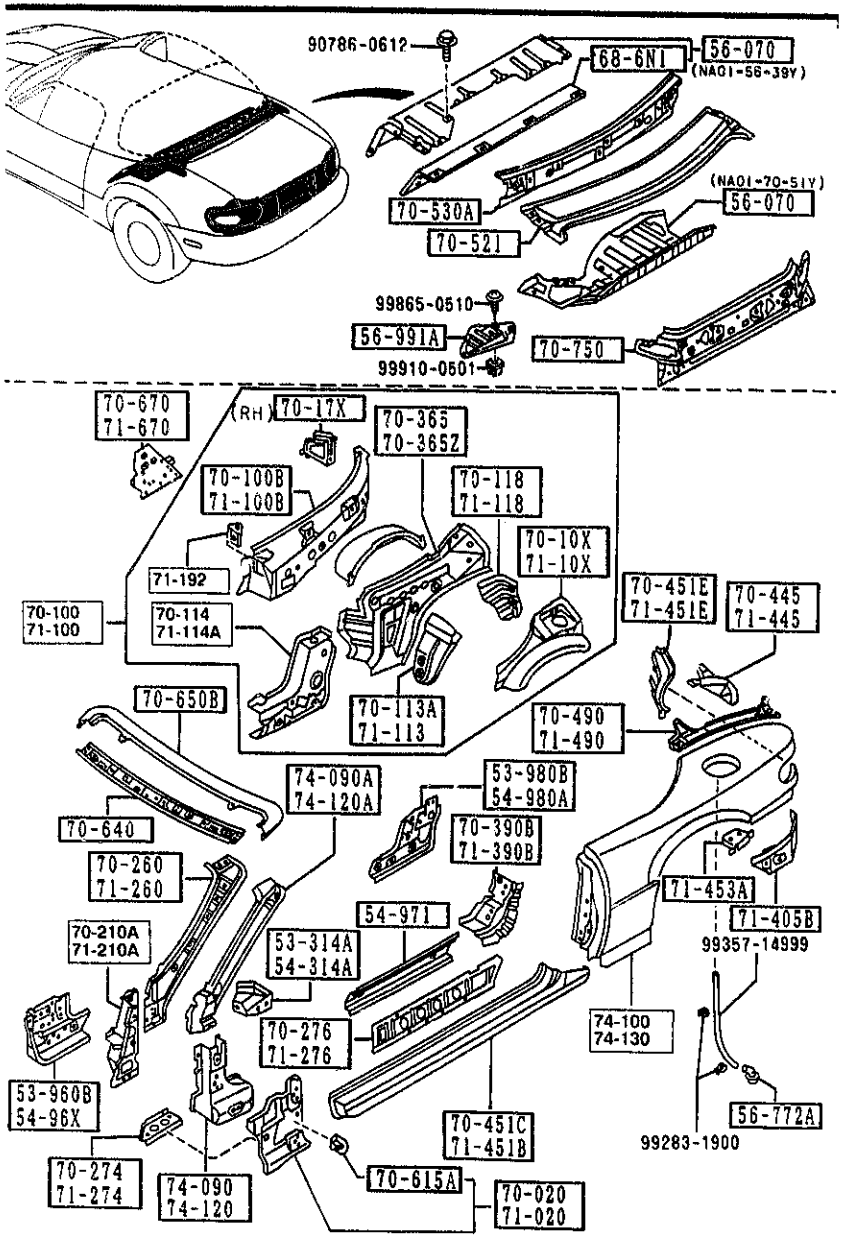

PART NO.	QTY	MODEL/RESTRICTION	MODEL/RESTRICTION	MODEL/RESTRICTION	FROM-TO
CONT'D AN(NA01-70-111C)					
NA01-70-111C	1				1929-
70-100		PANEL(R),QUARTER			
NA01-70-100G A (NA01-70-100H)	1				-1330
NA01-70-100H	1				1330-1801
NA01-70-100K AN(NA01-70-100L)	1				1801-1929
NA01-70-100L	1				1929-
70-100B		PANEL(R),INSIDE			
NA01-70-19XB	1				
70-113A		PLATE(R),SEAL			
NA01-70-11Z	1				
70-114		PLATE(R),END			
NA01-70-12XA	1				
70-118		PROTECTOR(R),SPLASH			
NA01-70-15X	1				
70-17X		BRKT,BATT.CLAMP-QTR PANEL			
NA01-70-17XA	1				
70-210A		PILLAR(R),HINGE			
NA01-70-230	1				
70-260		PILLAR(R),FRT.-INNER			
NA01-70-240B	1				
70-274		GUSSET(R),SIDE SILL OUTER			
NA01-70-274	1				
70-276		REINF.(R),SIDE SILL			
NA01-70-275	1				
70-365		REINF.(R),BELT LINE-C.PIL			
NA01-70-116A	1				

1330 NA35**-232705
1801 NA35**-300014
1929 NA35**-303526

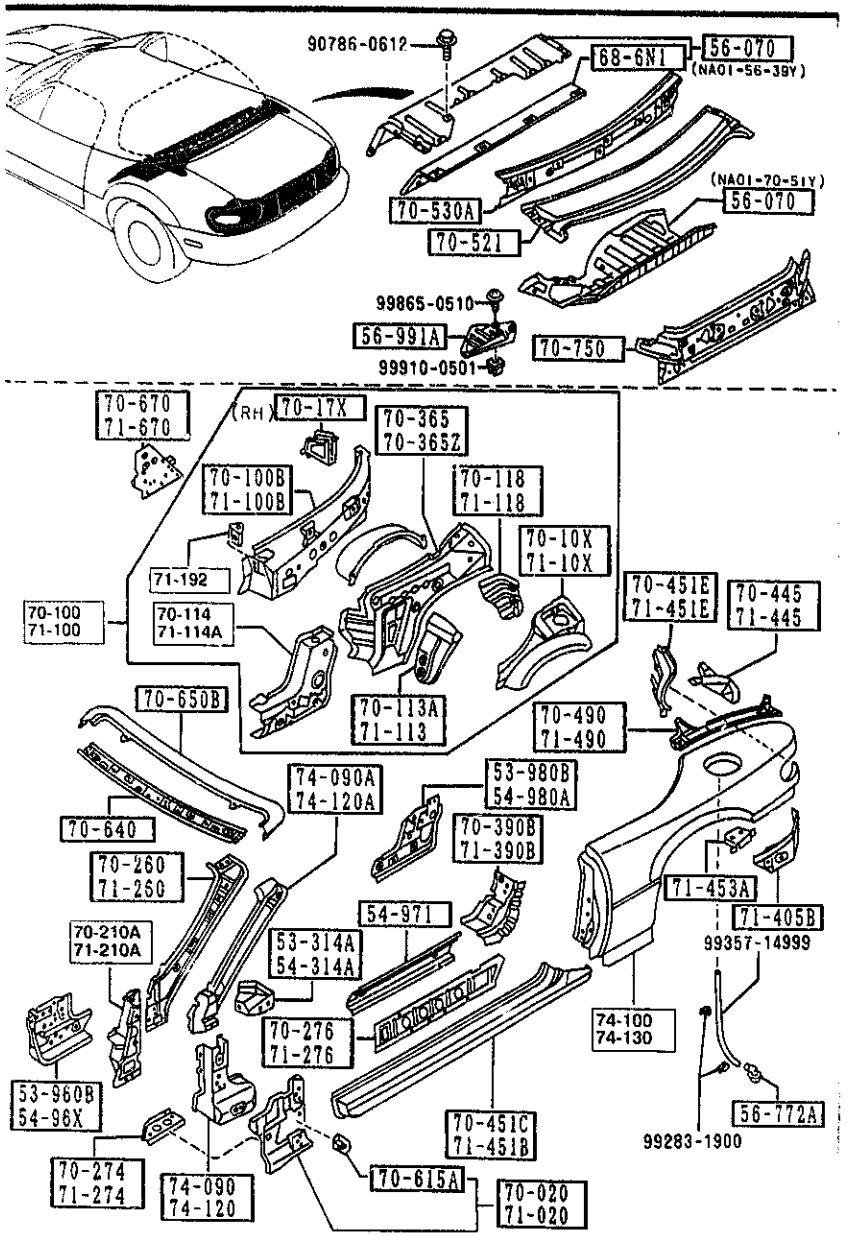

PART NO.	QTY	MODEL/RESTRICTION	MODEL/RESTRICTION	MODEL/RESTRICTION	FROM-TO
70-365Z NA01-71-116B	1	REINF.(L),BELT LINE-C.PIL			
70-390B NA01-70-460	1	REINF.(R),STRIKER			
70-445 NA01-70-445	1	GUSSET(R),REAR FENDER-RR			
70-451C NA01-70-270B	1	SILL(R),SIDE OUT.			
70-451E NA01-70-J30	1	HOUSING(R),LAMP-RR FENDER			
70-490 NA01-70-440A	1	RAIL(R),RAIN-REAR			
70-521 NA01-70-521A	1	PANEL,REAR DECK			
70-530A NA01-70-530A	1	MEMBER,REAR DECK			
70-615A B092-70-070A	2	BRACKET,FENDER			
70-640 NA01-70-640	1	HEADER,FRONT			
70-650B NA01-70-650	1	HEADER,FRONT-UPPER			
70-670 NA01-70-670	1	PLATE(R),CLOSING-QTR PANEL			
70-750 NA01-70-750F G (NA01-70-750G)	1	PANEL,REAR END			-0801
NA01-70-750G	1				0801-

0801 NA35**-205068

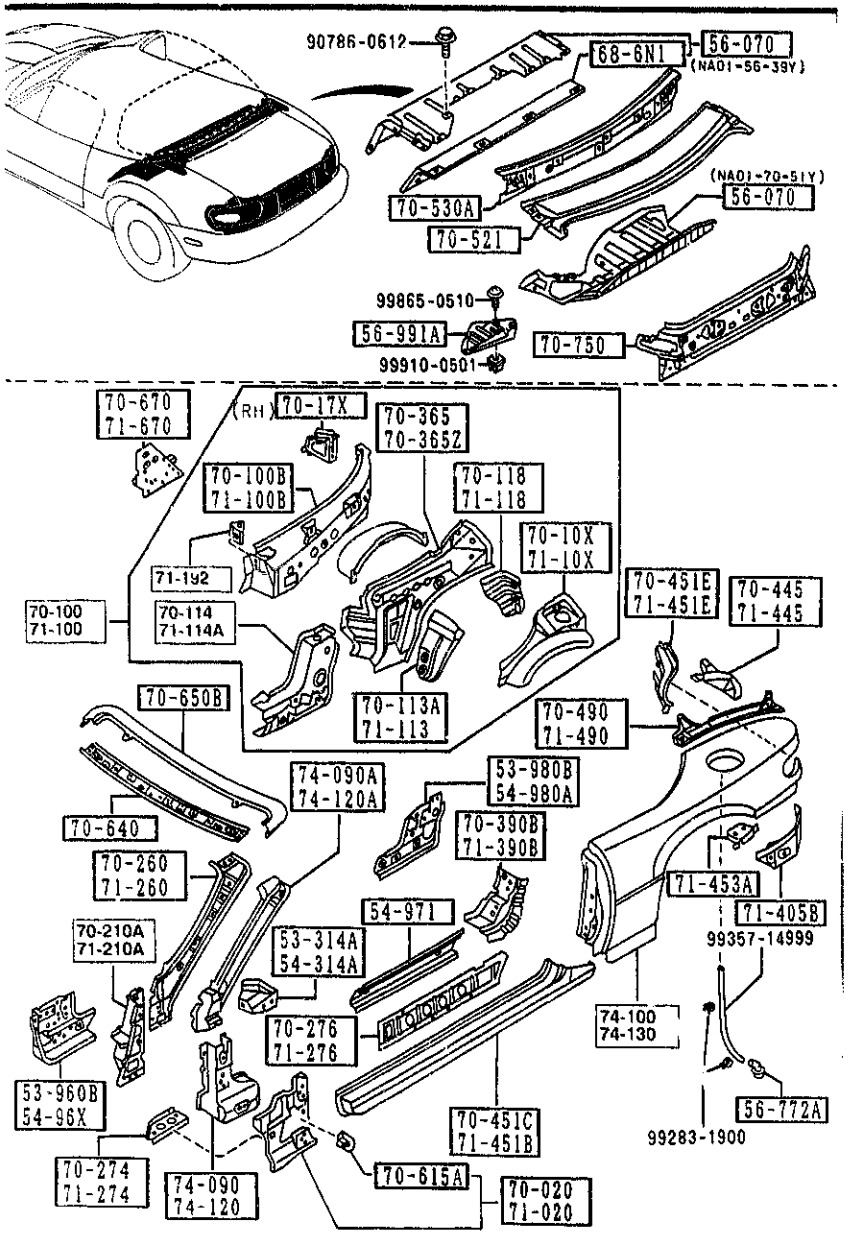

PART NO.	QTY	MODEL/RESTRICTION	MODEL/RESTRICTION	MODEL/RESTRICTION	FROM-TO
71-020 NA01-71-020B	1	PANEL(L),COWL SIDE			
71-10X NA01-71-11XA	1	PANEL(L),QUARTER			
71-100 NA01-71-100G	1	PANEL(L),QUARTER			
71-100B NA01-71-19XB	1	PANEL(L),INSIDE			
71-113 NA01-71-11Z	1	PLATE(L),SEAL			
71-114A NA01-71-12XA	1	JUNCTION(L),CORNER-Q /PANE			
71-118 NA01-71-15XA	1	PROTECTOR(L),SPLASH			
71-192 NA01-71-192	2	BRKT,CAP-QUARTER PAN EL			
71-210A NA01-71-230	1	PILLAR(L),HINGE			
71-260 NA01-71-240B	1	PILLAR(L),FRT.-INNER			
71-274 NA01-71-274	1	GUSSET(L),SIDE SILL OUTER			
71-276 NA01-71-275	1	REINF.(L),SIDE SILL			
71-390B NA01-71-460	1	REINF.(L),STRIKER			
71-405B NA01-71-421	1	PANEL(L),RR FENDER-L OWER			

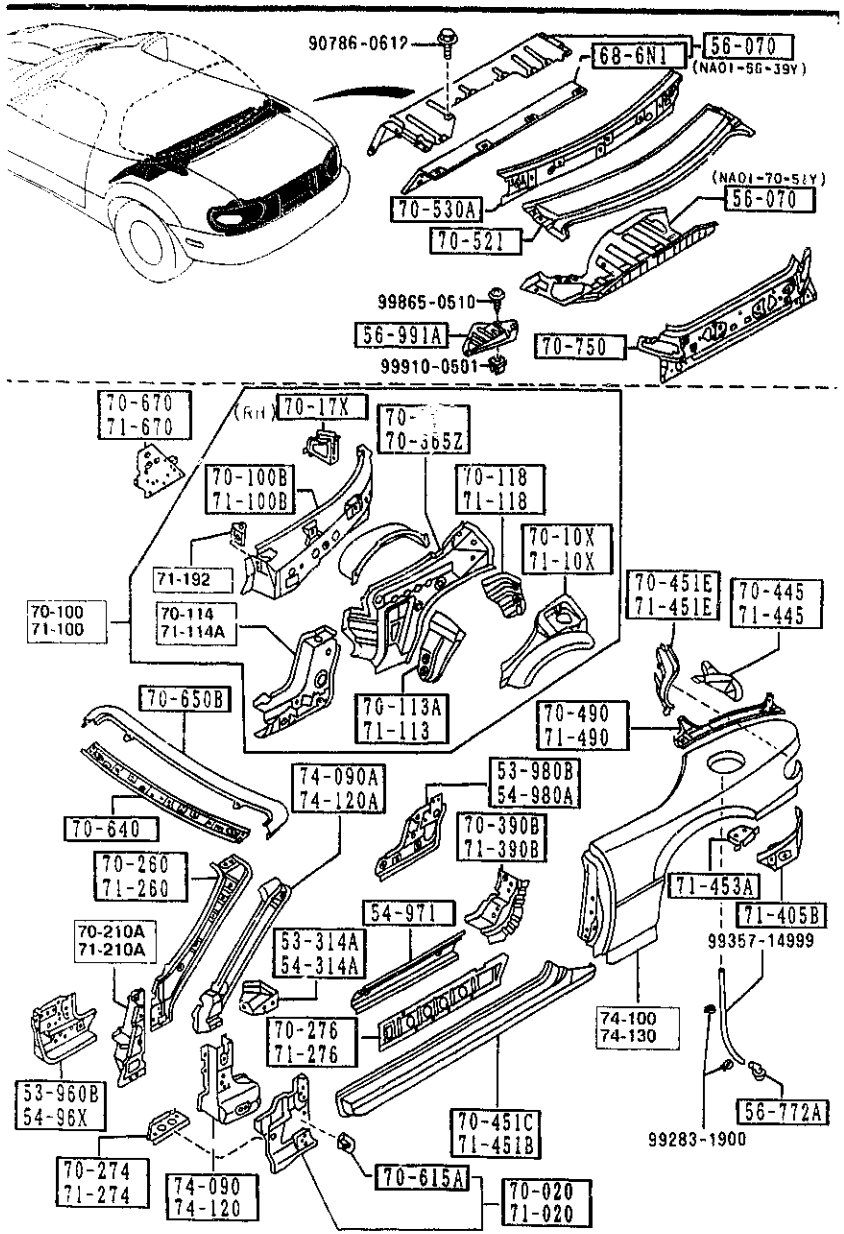

PART NO.	QTY	MODEL/RESTRICTION	MODEL/RESTRICTION	MODEL/RESTRICTION	FROM-TO
71-445		GUSSET(L),REAR FENDER-RR			
NA01-71-445	1				
71-451B		SILL(L),SIDE OUT.			
NA01-71-270B	1				
71-451E		HOUSING(L),LAMP-RR FENDER			
NA01-71-J30	1				
71-453A		BRKT(L),TRK.BOARD-FENDER			
NA01-71-453	1				
71-490		RAIL(L),RAIN-REAR			
NA01-71-440A	1				
71-670		PLATE(L),CLOSING-QTR PANEL			
NA01-71-670	1				-1801
NA01-71-670B	1				1801-
74-090		PILLAR(R),HINGE-OUT.			
NA01-70-280B	1				
74-090A		PILLAR(R),FRONT-OUT.			
NA01-70-210	1				
74-100		PANEL(R),FENDER-REAR			
NAY1-70-400A AN(NAY1-70-400B)	1				-1101
NAY1-70-400B	1				1101-
74-120		PILLAR(L),HINGE-OUT.			
NA01-71-280B	1				
74-120A		PILLAR(L),FRONT-OUT.			
NA01-71-210	1				
74-130		PANEL(L),FENDER-REAR			
NAY1-71-400A AN(NAY1-71-400B)	1				-1101
NAY1-71-400B	1				1101-

1101 NA35**-223636
1801 NA35**-300014

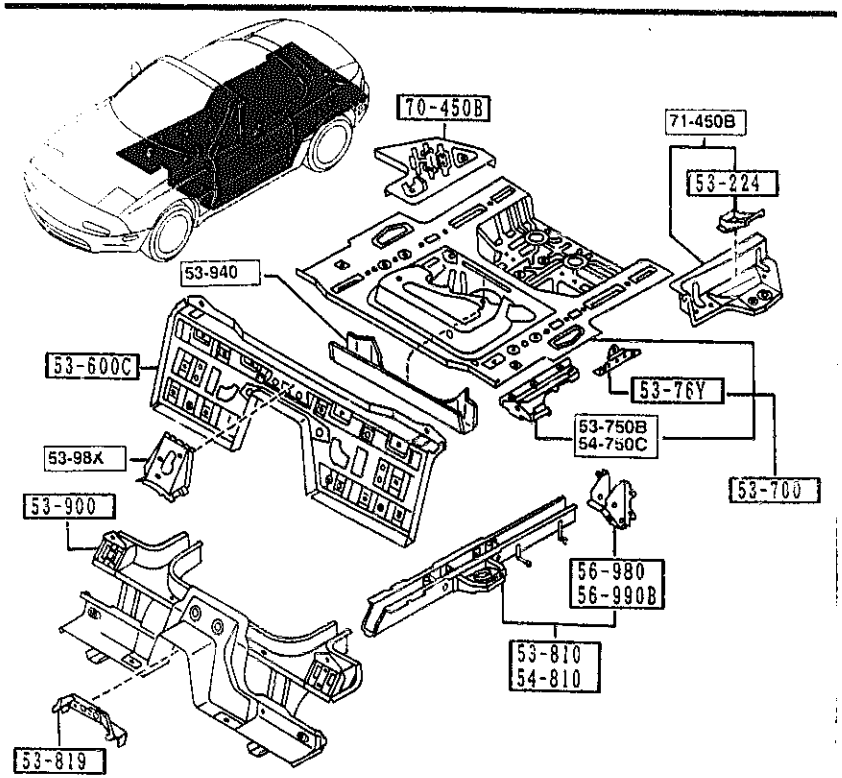

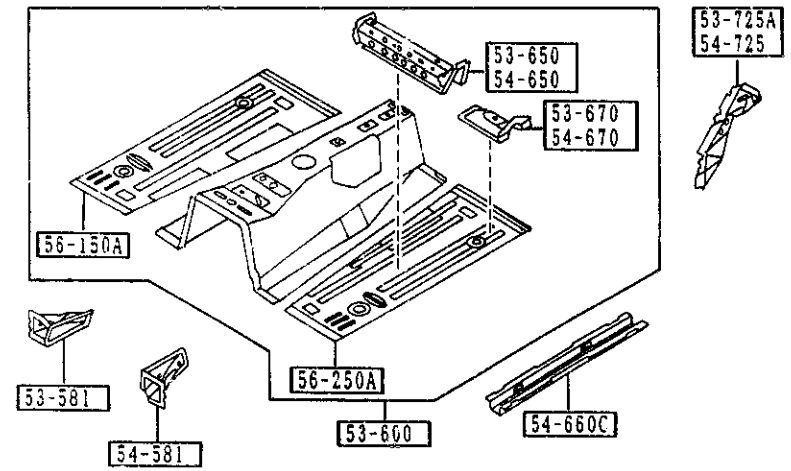

AUNA02

PART NO.	QTY	MODEL/RESTRICTION	MODEL/RESTRICTION	MODEL/RESTRICTION	FROM-TO
53-224		BRACKET,JACK			
B455-53-750C	1				
53-581		JUNCTION(R),FRT. FLOOR			
NA01-53-482	1				
53-600		PAN,FLOOR-FRONT			
NA01-53-600A	1				
53-600C		PAN,FLOOR-CENTER			
NA01-53-720	1				
53-650		MEMBER NO.2(R),CROSS-FLOOR			
NA01-53-650	1				
53-670		BRKT(R),SEAT-F.FLOOR PAN			
NA01-53-670	1				
53-700		PAN,FLOOR-REAR			
NA01-53-710B	1				
53-725A		GUSSET NO.3(R),C.FLOOR PAN			
NA01-53-725A	1				
53-750B		PLATE(R),SIDE-REAR FLOOR			
NA01-53-750	1				
53-76Y		PLATE,NUT-TRUNK FLOOR PAN			
NA01-53-760	2				
53-810		FRAME(R),REAR SIDE			
NA01-53-810D AN(NA01-53-810E)	1				-0A01
NA01-53-810E AN(NA01-53-810F)	1				0A01-1110
NA01-53-810F	1				1110-
53-819		BRACKET,PARKING CABLE-FLOOR			
NA01-53-819	1				
53-900		MEMBER NO.3,CROSS			

0A01 NA35**-213219
1110 NA35**-224235

CAT. AUNA02-07

1993-12

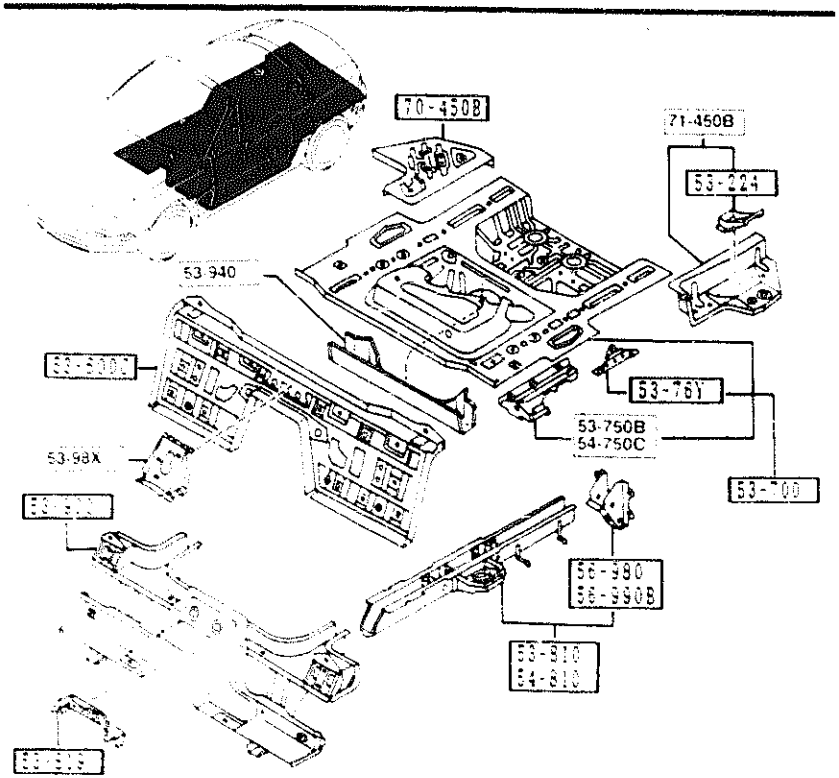

PART NO.	QTY	MODEL REGISTRATION	MODEL YEAR	MFG. NO.	REMARKS
CONT'D					
NA01-53-900 A (NA01-53-900B)	1				-1801
NA01-53-900B	1				1801-
+----------+ | 53-940 | +----------+		MEMBER NO.4,CROSS			
NA01-53-931	1				
+----------+ | 53-98X | +----------+		GUSSET,FRONT FLOOR PAN			
NA01-53-880	1				-1601
NA01-53-880A	1				1601-
+----------+ | 54-581 | +----------+		JUNCTION(L),FRT FLOOR			
NA01-54-482	1				
+----------+ | 54-650 | +----------+		MEMBER NO.2(L),CROSS-FLOOR			
NA01-54-650	1				
+----------+ | 54-660C | +----------+		FRAME,FRONT-FRT FLOOR PAN			
NA01-54-660 A (NA01-54-660B)	2				-1801
NA01-54-660B	2				1801-
+----------+ | 54-670 | +----------+		BRKT(L),SEAT-F,FLOOR PAN			
NA01-54-670	1				
+----------+ | 54-725 | +----------+		GUSSET NO.3(L),C,FLOOR PAN			
NA01-54-725A	1				
+----------+ | 54-750C | +----------+		PLATE(L),SIDE-REAR FLOOR			
NA01-54-750	1				
+----------+ | 54-810 | +----------+		FRAME(L),REAR SIDE			
NA01-54-810D AN(NA01-54-810E)	1				-0A01
NA01-54-810E AN(NA01-54-810F)	1				0A01-1110
NA01-54-810F	1				1110-
+----------+ | 56-150A | +----------+		PAN(R),FLOOR			
NA01-53-602	1				

0A01 NA35**-213219
1110 NA35**-224235
1801 NA35**-300014

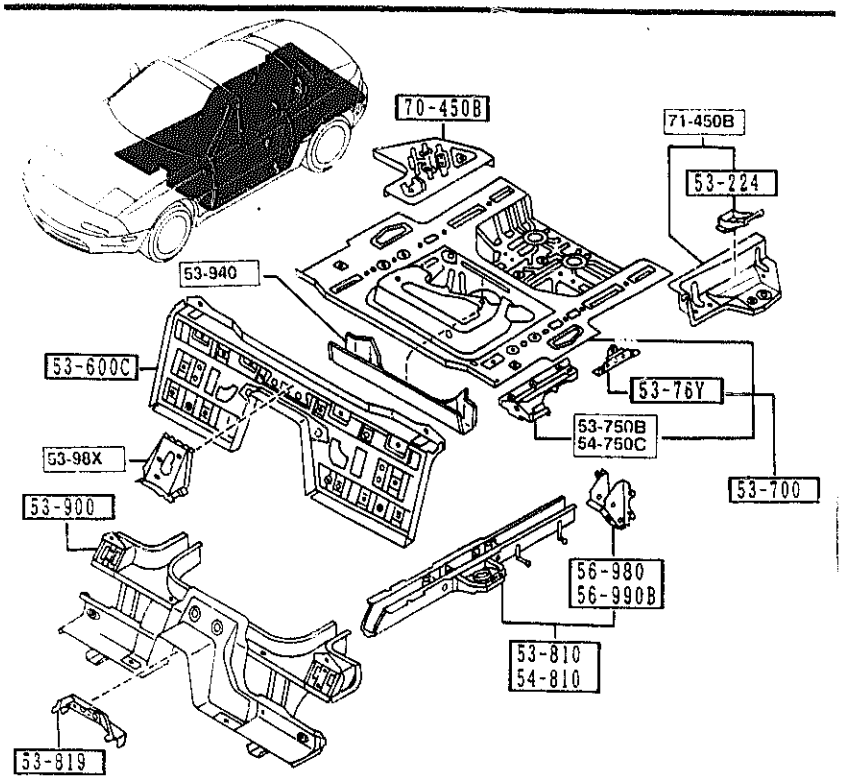

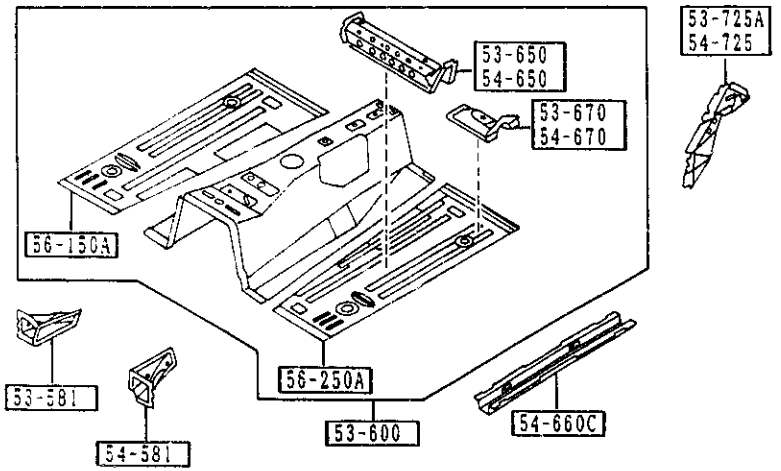

PART NO.	QTY	MODEL/RESTRICTION	MODEL/RESTRICTION	MODEL/RESTRICTION	FROM TO
56-250A NA01-54-610	1	PAN(L),FLOOR			
56-980 NA01-53-830C	1	BRKT(R),BUMPER-RR SKIRT			
56-990B NA01-54-830C	1	BRKT(L),BUMPER-RR SKIRT			
70-450B NA01-53-740B G (NA01-53-740C)	1	PANEL(R),FLOOR SIDE			-1801
NA01-53-740C	1				1801-
71-450B NA01-54-740A	1	PANEL(L),FLOOR SIDE			

1801 NA35**-300014

AUNA02

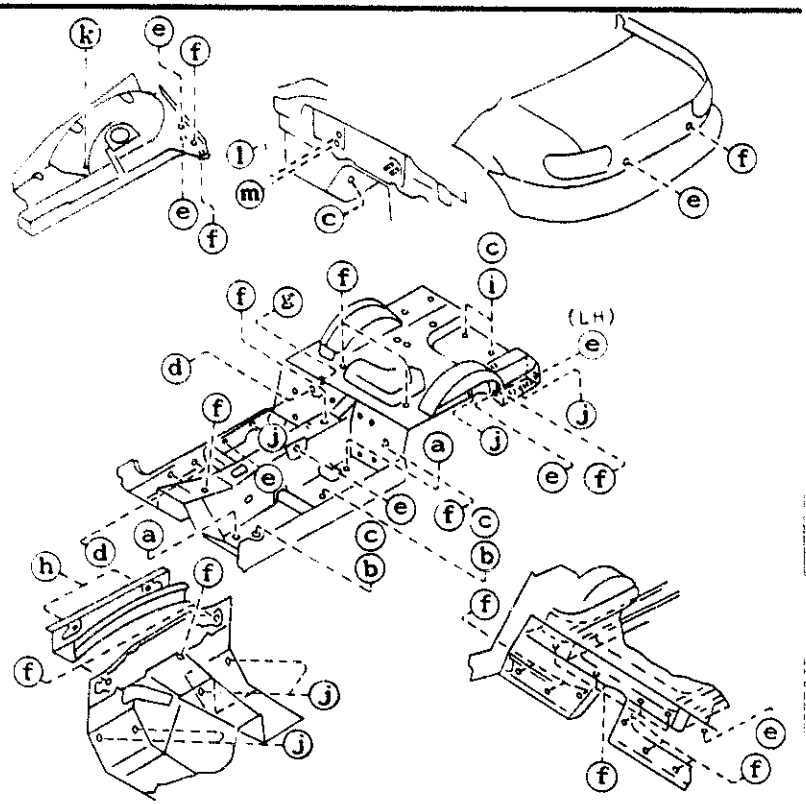

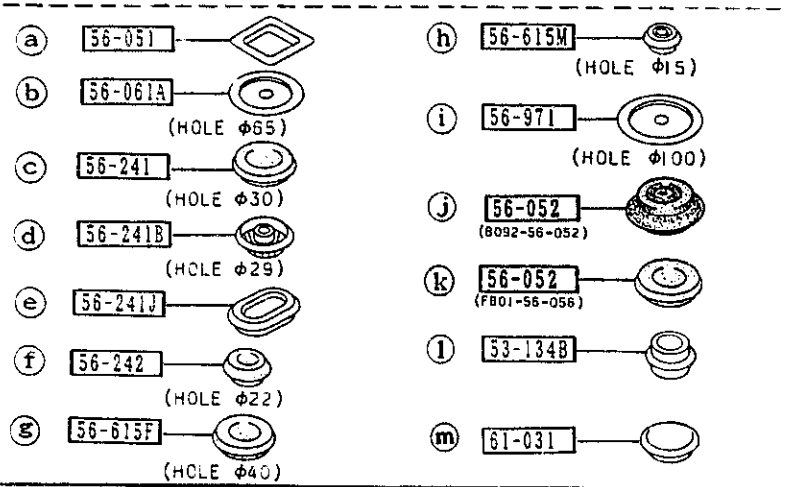

AUNA02

PART NO.	QTY	MODEL/RESTRICTION	MODEL/RESTRICTION	MODEL/RESTRICTION	FROM TO
53-134B 0187-53-134	1	RUBBER,DUST SEAL			
56-051 1011-56-051	4	COVER,HOLE			
56-052 B092-56-052	9	PLUG,DRAIN D=12MM			
FB01-56-056	4				
56-061A 8545-56-052	4	COVER,HOLE			
56-241 0118-56-241	7	PLUG,DRAIN			
56-241B B001-56-051	6	PLUG			
56-241J 8477-56-241	9	PLUG,DRAIN			
56-242 0118-56-242B	19	PLUG,DRAIN			
56-615F 0208-56-615	2	PLUG,DRAIN			
56-615M NA01-56-051	2	PLUG,DRAIN			
56-971 8545-56-053	2	COVER,HOLE			
61-031 1708-61-031	1	PLUG,HOLE			

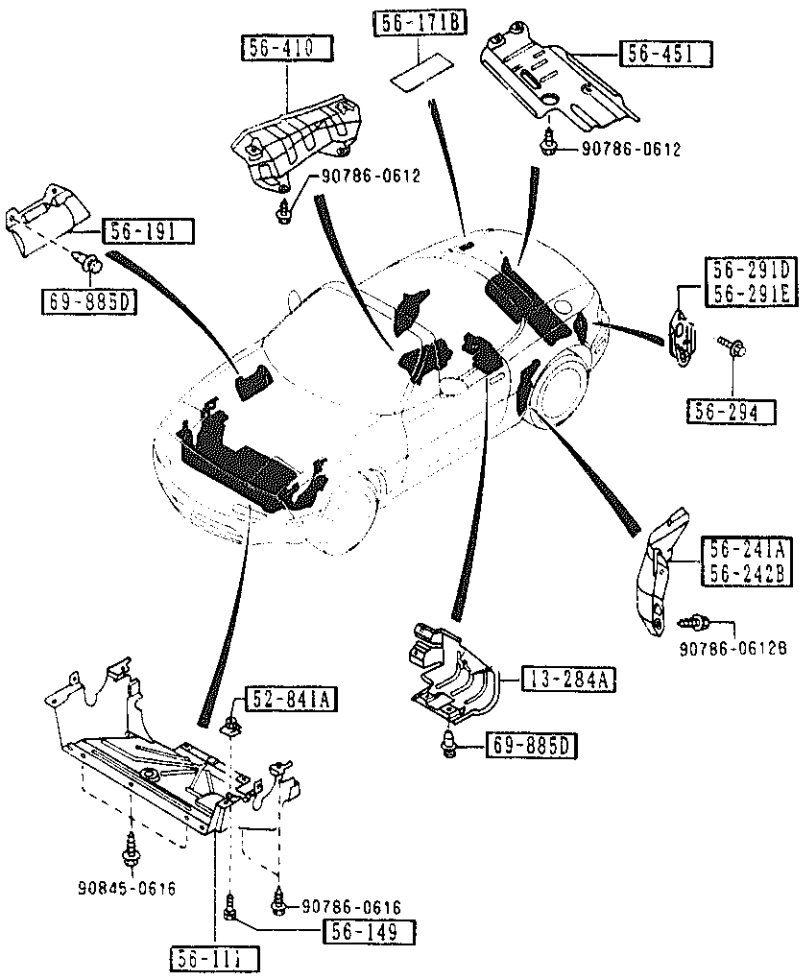

PART NO.	QTY	MODEL/RESTRICTION	MODEL/RESTRICTION	MODEL/RESTRICTION	FROM TO
13-284A		COVER,FUEL FILTER			
NA01-56-2418	1				
52-841A		NUT,CLIP			
B455-56-135	1				
56-111		COVER,UNDER			
NA01-56-111C	1				
56-149		SCREW,TAPPING-MUD GUARD			
B455-56-149	1				
56-171B		PROTECTOR(R),RR FENDER			
NA01-56-171A	1				
56-191		SHIELD,SPLASH			
NA01-56-112	1				
56-241A		SHIELD(R),SPLASH-REAR			
NA01-56-311	1				-0921
AN(NA01-56-311A)					
NA01-56-311A	1				0921-
56-242B		SHIELD(L),SPLASH-REAR			
NA01-56-321	1				-0921
AN(NA01-56-321A)					
NA01-56-321A	1				0921-
56-291D		HOOK(R),TIE DOWN			
NA01-56-29XC	1				
56-291E		HOOK(L),TIE DOWN			
NA01-56-290C	1				
56-294		SCREW,TIE DOWN HOOK			
NA01-56-294	4				
56-410		INSULATOR,HEAT-FRONT			
NA01-56-411	1				
56-451		INSULATOR			

0921 NA35**-211544

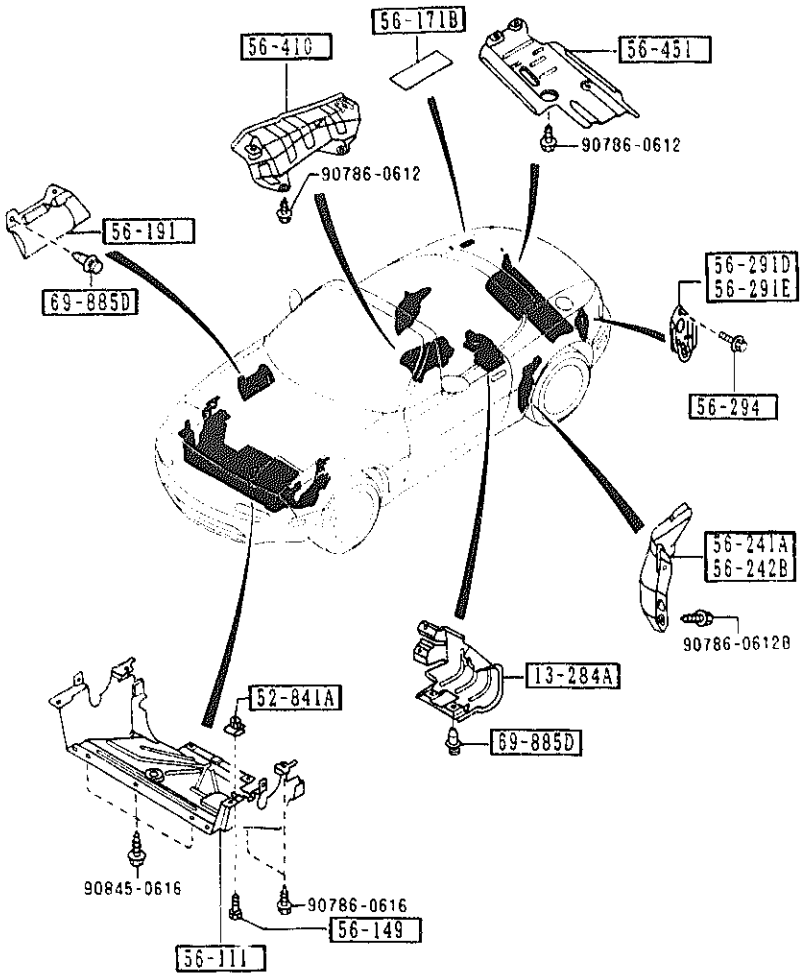

PART NO.	QTY	MODEL RESTRICTION	MODEL RESTRICTION	MODEL RESTRICTION	ITEM NO.
CONT'D					
NA01-56-451	1				
69-885D		FASTENER			
NA01-56-145	7				

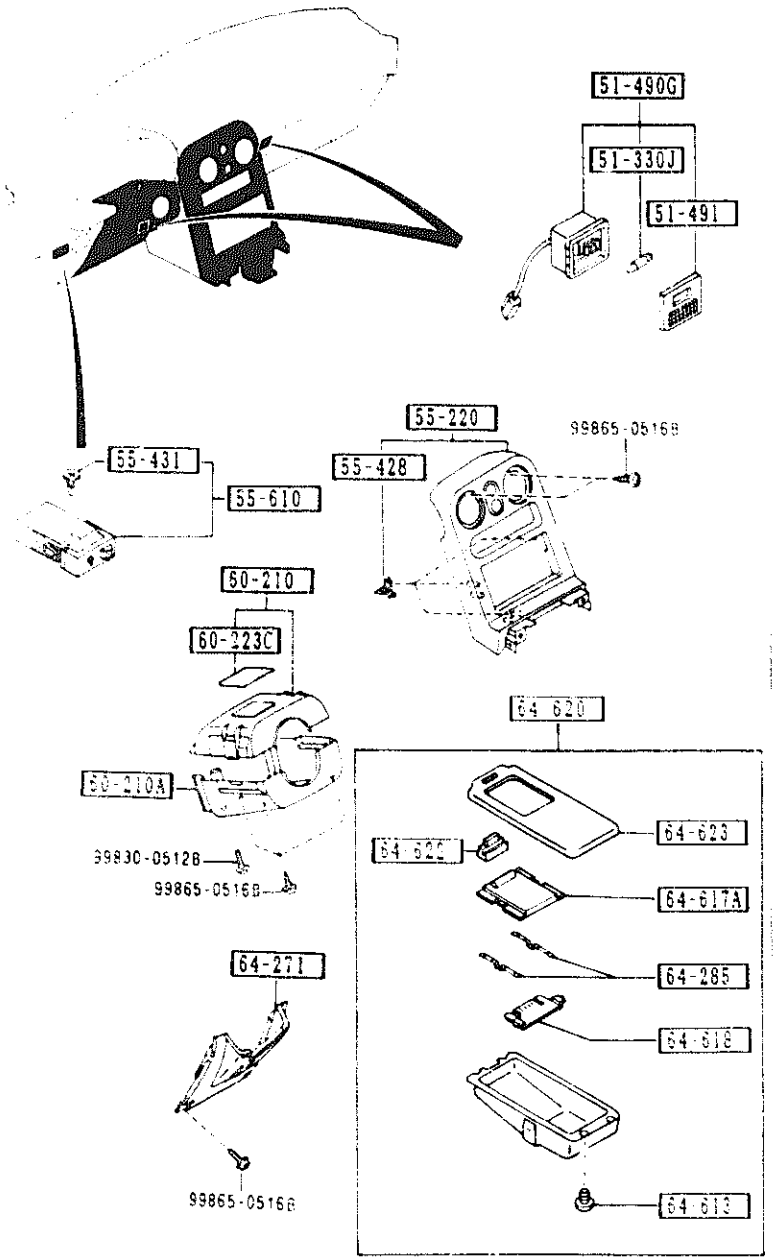

PART NO.	QTY	MODEL/RESTRICTION	MODEL RESTRICTION	MODEL RESTRICTION	FROM TO
51-330J		BULB			
99701-5050	2	12V 5W			
51-490G		LAMP,PERSONAL			
NA01-51-490B	2				
00	INT-	NA0 NA1 NA2 BLACK			
51-491		LENS,PERSONAL LAMP			
H197-51-491A	2				
00	INT-	NA0 NA1 NA2 BLACK			
55-220		PANEL,CENTER			
NA01-55-210A (NA01-55-210B)	1				-1501
00	INT-	NA0 NA1 BLACK			
NA01-55-210B	1				1501-
00	INT-	NA0 NA1 NA2 BLACK			
55-428		SPRING,METER HOOD			
GJ21-55-428	3				
55-431		BULB,RESISTOR			
BR70-55-431	1				
55-610		RESISTOR,PANEL LIGHT			
BR70-55-490	1				
60-210		COVER,COLUMN-UPPER			
NA01-60-220	1				
00	INT-	NA0 NA1 NA2 BLACK			
60-210A		COVER,COLUMN-LOWER			
NA01-60-230A	1				
00	INT-	NA0 NA1 NA2 BLACK			
60-223C		CAP,COLUMN COVER			
NA01-60-223	1				
00	INT-	NA0 NA1 NA2 BLACK			

1501 NA35**-233754

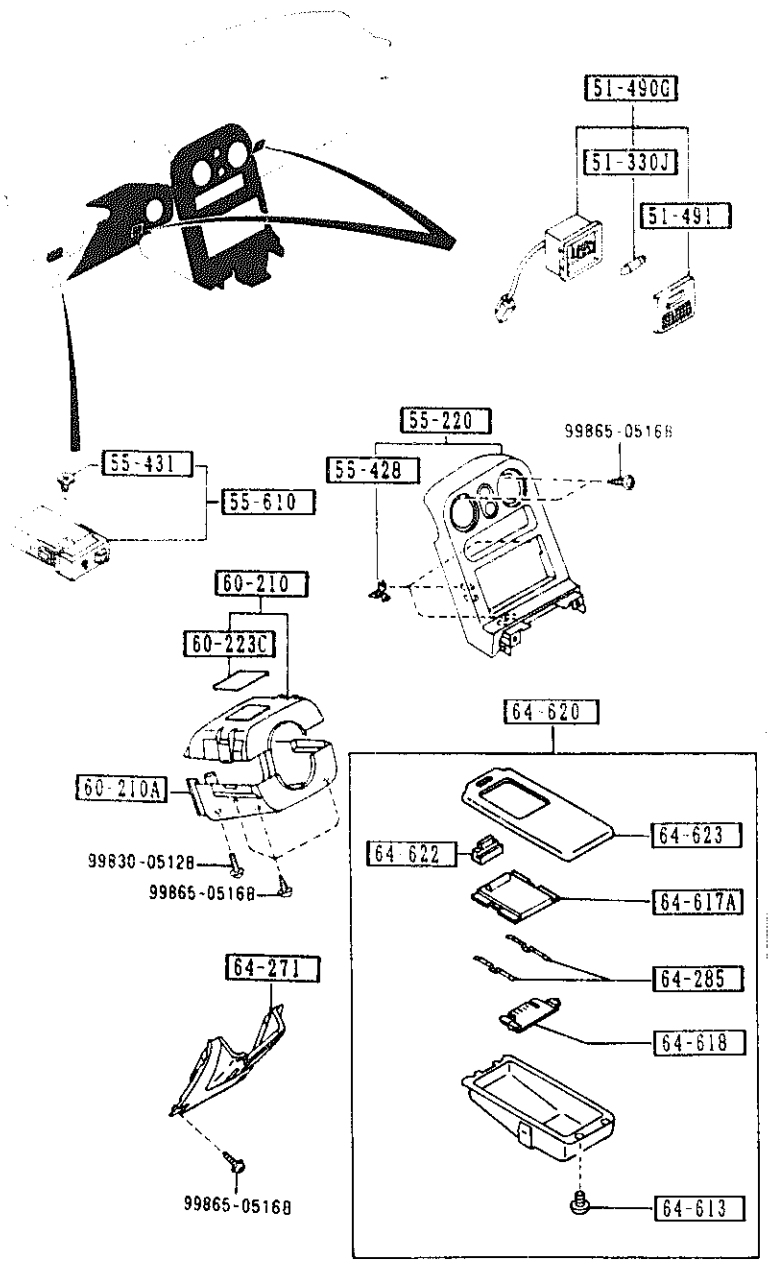

PART NO.	QTY	MODEL RESTRICTION	MODEL RESTRICTION	MODEL RESTRICTION	FROM TO
64-271		PANEL,CENTER-LOWER			
NA01-64-270C A (NA01-64-270D)	1				-1123
00	INT-	NA0 NA1 BLACK			
NA01-64-270D	1				1123-
00	INT-	NA0 BLACK			
88	INT-	NA1 TAN			
64-285		SPRING,ASHTRAY			
NA01-64-612	2				
64-613		SCREW,ASHTRAY			
NA01-64-613	4				
64-617A		LID,ASHTRAY			
NA01-64-617	1				
00	INT-	NA0 NA1 NA2 BLACK			
64-618		PLATE,ASHTRAY			
NA01-64-618	1				
64-620		TRAY,ASH			
NA01-64-610 A (NA01-64-610A)	1				-0A01
00	INT-	NA0 NA1 BLACK			
NA01-64-610A AN(NA01-64-610B)	1				0A01-0C01
00	INT-	NA0 NA1 BLACK			
NA01-64-610B	1				0C01-
00	INT-	NA0 NA1 NA2 BLACK			
64-622		LIGHT,PLATE-ASHTRAY			
NA01-64-622	1				
64-623		CASE'OUT',ASHTRAY			
NA01-64-623	1				
00	INT-	NA0 NA1 NA2 BLACK			

0A01 NA35**-213219
0C01 NA35**-220813
1123 NA35**-226539

5520 -1 * METER HOOD

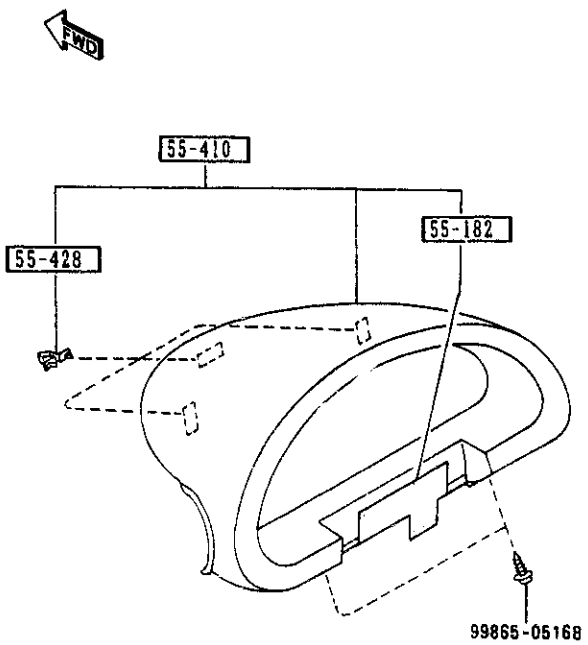

PART NO.	QTY	MODEL/RESTRICTION	MODEL/RESTRICTION	MODEL/RESTRICTION	FROM-10
55-182		RUBBER,BLIND			
NA01-55-182	1				
55-410		HOOD,METER			
NA01-55-420B	1	(STD COAT BLACK/BLACK)			
00	INT-	NA0 NA1 NA2 BLACK			
NA02-55-420	1	(PROTAIN COAT BLACK/TAN)			0B01-
00	INT-	NA1 NA2 BLACK			
55-428		SPRING,METER HOOD			
GJ21-55-428	3				

0B01 NA35**-217311

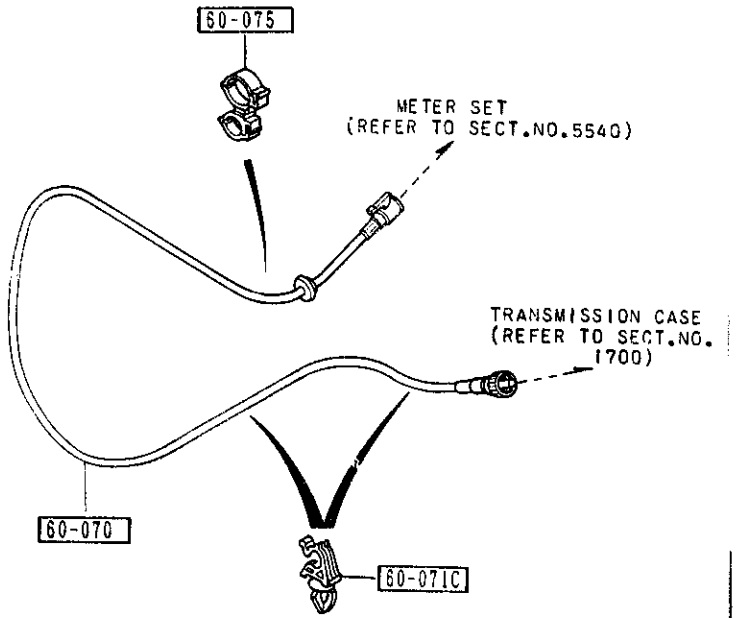

5530 -1 * SPEEDOMETER CABLE

PART NO.	QTY	MODEL/RESTRICTION	MODEL/RESTRICTION	MODEL/RESTRICTION	FROM-TO
60-070		CABLE,SPEEDOMETER			
NA01-60-070B	1	(MT)			
NA01-60-070A	1	(AT)			
60-071C		CLIP			
NA03-60-071	2				
60-075		CLIP'A',SPEEDOMETER CABLE			
NA01-60-075	1				

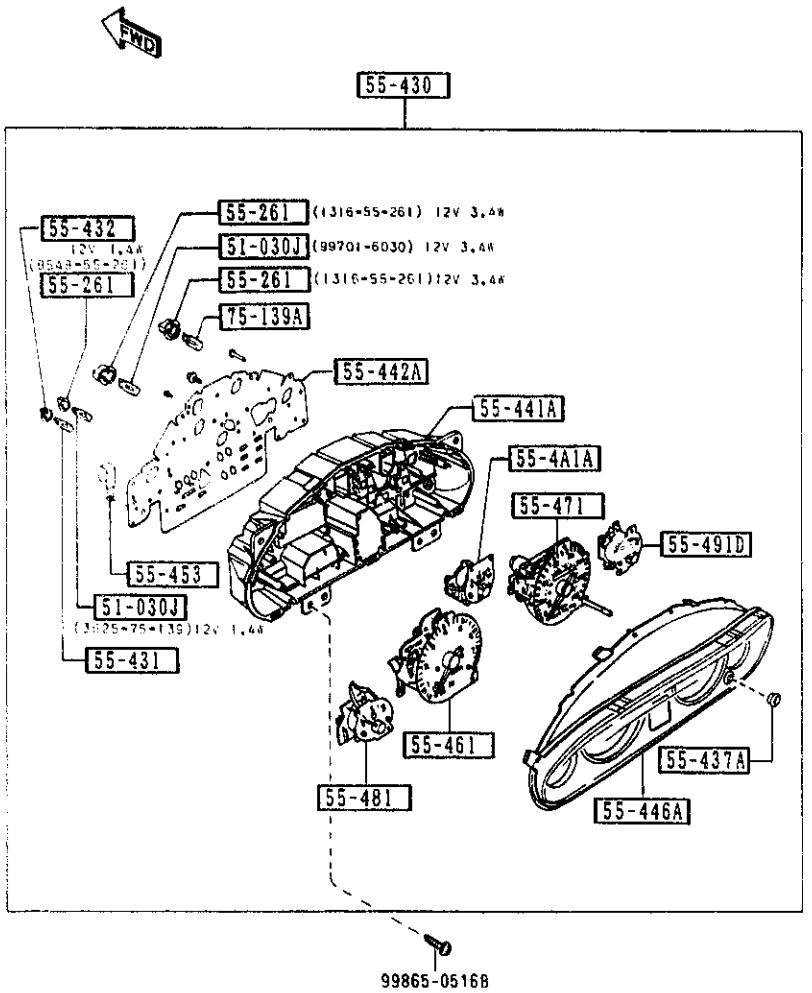

PART NO.	QTY	MODEL/RESTRICTION	MODEL/RESTRICTION	MODEL/RESTRICTION	FROM-TO
51-030J		BULB			
3625-75-139	7	12V 1.4W,FOR WARNING (MT)			
3625-75-139	8	12V 1.4W,FOR WARNING (AT)			
99701-6030	3	12V 3.4W			
55-261		SOCKET			
1316-55-261	7	12V 3.4W			
8548-55-261	7	12V 1.4W BLACK (MT)			
8548-55-261	8	12V 1.4W BLACK (AT)			
55-4A1A		METER,OIL PRESSURE			
NA01-55-4A1	1				
55-430		METER SET			
NA01-55-430C	1	((MT)>(W/O A.LOCK BRAKE))			-1801
NA03-55-430B	1	((AT)>(W/O A.LOCK BRAKE))			-1801
NA23-55-430	1	((MT)>(A.LOCK BRAKE))			-1801
NA25-55-430	1	((AT)>(A.LOCK BRAKE))			-1801
NA01-55-430D A (NA01-55-430E)	1				1801-2601
NA03-55-430C A (NA03-55-430D)	1				1801-2601
NA23-55-430A A (NA23-55-430B)	1				1801-2601
NA25-55-430A A (NA25-55-430B)	1				1801-2601
NA01-55-430E	1	((MT)>(W/O A.LOCK BRAKE))			2601-
NA03-55-430D	1	((AT)>(W/O A.LOCK BRAKE))			2601-
NA23-55-430B	1	((MT)>(A.LOCK BRAKE))			2601-
NA25-55-430B	1	((AT)>(A.LOCK BRAKE))			2601-

1801 NA35**-300014
2601 NA35**-329895

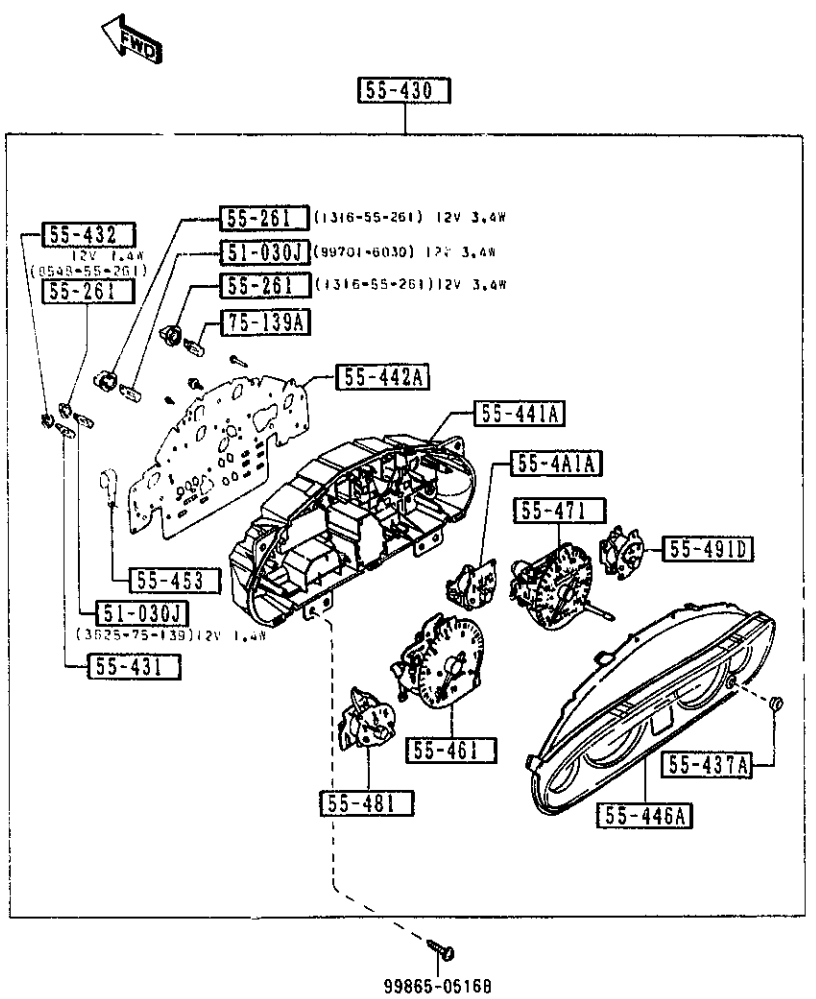

PART NO.	QTY	MODEL/RESTRICTION	MODEL/RESTRICTION	MODEL/RESTRICTION	FROM-TO
55-431		BULB,RESISTOR			
NA01-55-431	1				
55-432		SOCKET,METER SET			
NA01-55-432	1				
55-437A		GROMMET,KNOB-METER SET			
NA01-55-437	1				
55-441A		CASE,METER			
NA23-55-441	1				-1801
NA01-55-441C	1				1801-
55-442A		PLATE,PRINT			
NA01-55-442BA (NA01-55-442C)	1				-1801
NA03-55-442BA (NA03-55-442C)	1				-1801
NA23-55-442A (NA23-55-442A)	1				-1801
NA25-55-442A (NA25-55-442A)	1				-1801
NA01-55-442C	1	((MT)>(W/O A.LOCK BRAKE))			1801-
NA03-55-442C	1	((AT)>(W/O A.LOCK BRAKE))			1801-
NA23-55-442A	1	((MT)>(A.LOCK BRAKE))			1801-
NA25-55-442A	1	((AT)>(A.LOCK BRAKE))			1801-
55-446A		PLATE,WINDOW			
NA01-55-446AG (NA01-55-446B)	1				-1801
NA01-55-446B	1				1801-
55-453		CLAMP			
N007-55-467	1				1801-
55-461		TACHOMETER			
NA01-55-461A	1	(MT)			
NA03-55-461A	1	(AT)			

1801 NA35**-300014

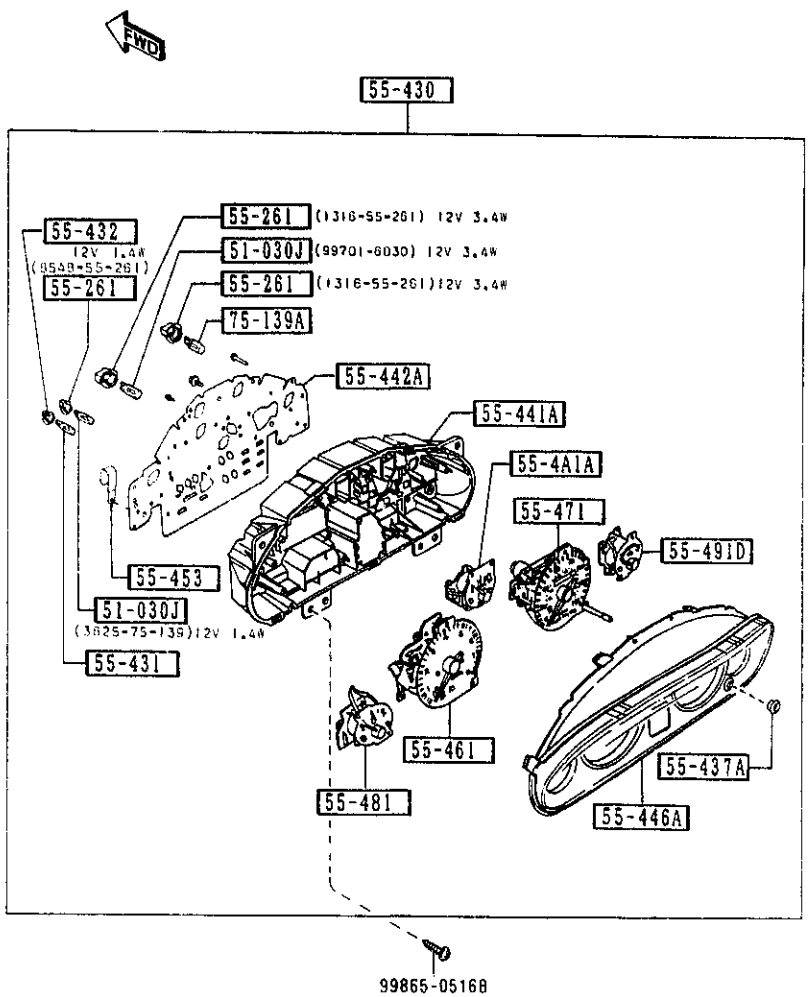

PART NO.	QTY	MODEL/RESTRICTION	MODEL/RESTRICTION	MODEL/RESTRICTION	FROM-TO
55-471		SPEEDOMETER			
NA01-55-471A (NA01-55-471B)	1				-2601
NA01-55-471B	1				2601-
55-481		METER,FUEL			
NA01-55-481	1				
55-491D		METER,THERMO			
NA01-55-491	1				
75-139A		BULB			
B491-55-431	4				

2601 NA35**-329895

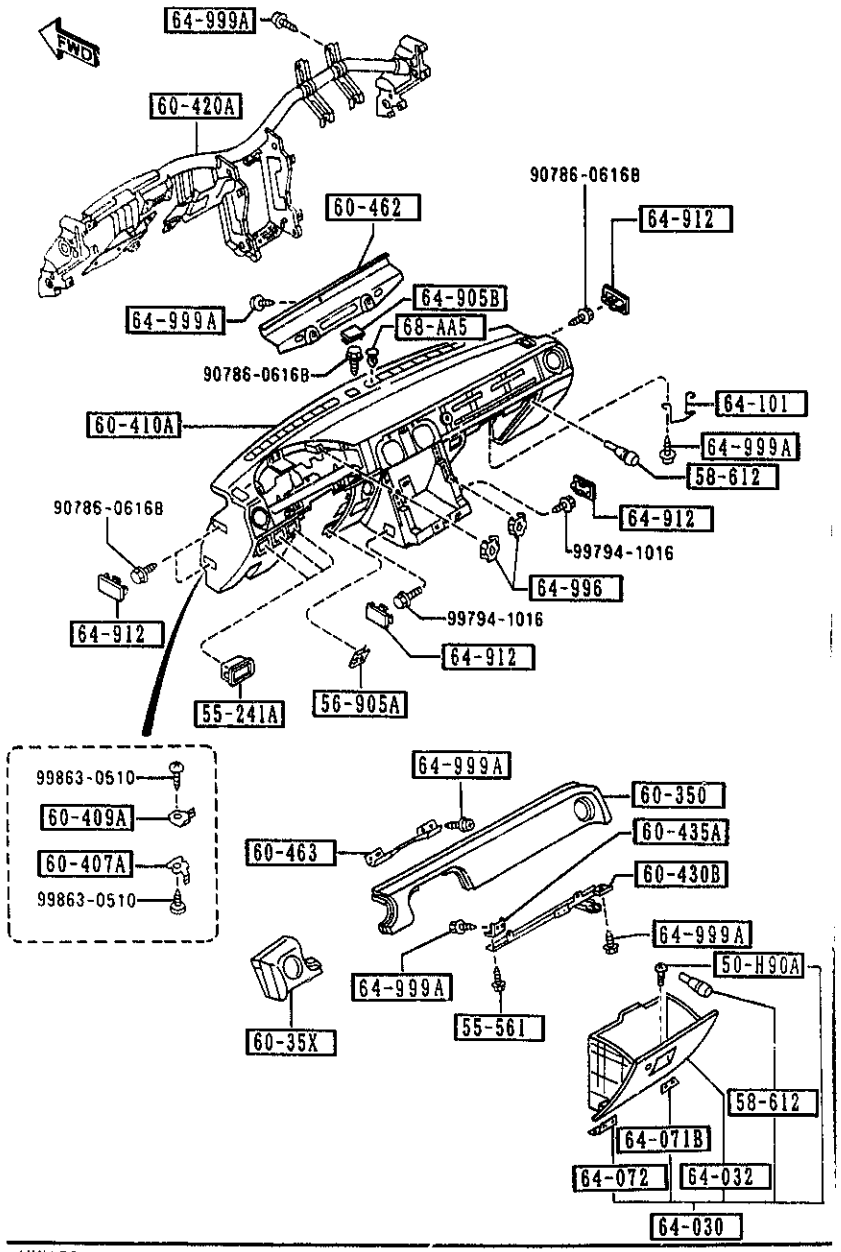

PART NO.	QTY	MODEL/RESTRICTION	MODEL/RESTRICTION	MODEL/RESTRICTION	FROM-TO
50-H90A		SCREW,MOULD-FRT WIND			
LA01-50-H90	1				
55-241A		BOX,INSTRUMENT PANEL			
NA01-55-241A	3				
00 INT-		NA0 NA1 NA2 BLACK			
55-561		BOLT,INST. PANEL			
B455-55-561	1				
56-905A		NUT,SPRING			
B092-60-408	4				
58-612		CUSHION,RUBBER			
B092-64-046	3				
60-35X		PAD,INSTRUMENT PANEL			
NA01-60-35X	1				
00 INT-		NA0 BLACK			
88 INT-		NA1 TAN			
60-350		PAD,CRASH			
NA01-60-350	1				
00 INT-		NA0 BLACK			
88 INT-		NA1 TAN			
60-407A		SPRING,NO.1			
NA01-60-407	2				
60-409A		SPRING,NO.2			
NA01-60-409	2				
60-410A		PANEL,INSTRUMENT			
NA01-60-401C A (NA01-60-401D)	1				-0927
00 INT-		NA0 BLACK			
NA01-60-401D	1	(STD COAT BLACK/BLAC K)			0927-
00 INT-		NA0 BLACK			
NA02-60-401	1	(PROTAIN COAT BLACK/			0B01-

0927 NA35**-212630
0B01 NA35**-217311

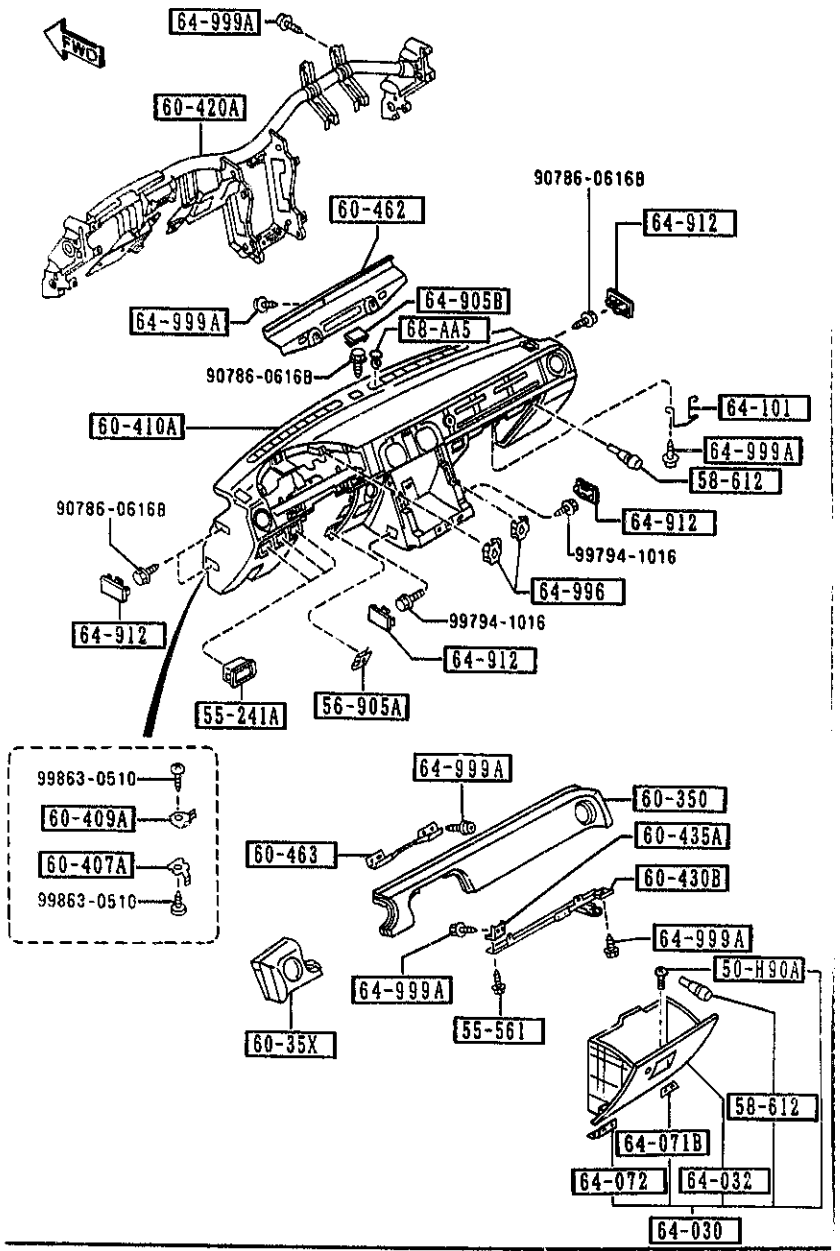

PART NO.	QTY	MODEL/RESTRICTION	MODEL/RESTRICTION	MODEL/RESTRICTION	FROM-TO
CONT'D					
		TAN)			
88 INT-		NA1 BLACK/TAN			
+----------+					
| 60-420A |		FRAME,INST.PANEL			
+----------+					
NA01-60-420D	1				
+----------+					
| 60-430B |		MEMBER(R),INST. PANEL			
+----------+					
NA01-60-430C	1				
+----------+					
| 60-435A |		BRACKET,MEMBER			
+----------+					
NA01-60-435	1				
+----------+					
| 60-462 |		BRACKET,INST. PANEL			
+----------+					
NA01-60-462A	1				
+----------+					
| 60-463 |		BRACKET,CRASH PAD			
+----------+					
NA01-60-463	1				
+----------+					
| 64-030 |		BOX,GLOVE			
+----------+					
NA01-64-030D	1				-0820
		NA0 NA1 BLACK/TAN			
00		BLACK			
NA01-64-030E	1				0820-
00 INT-		NA0 BLACK			
88 INT-		NA1 TAN			
+----------+					
| 64-032 |		COVER,BOX			
+----------+					
NA01-64-032B	1				-0820
00 INT-		NA0 BLACK			
88 INT-		NA1 TAN			
NA01-64-032C	1				0820-
00 INT-		NA0 BLACK			
88 INT-		NA1 TAN			
+----------+					
| 64-071B |		HINGE(R),GLOVE LID			
+----------+					
NA01-64-03X	1				
+----------+					
| 64-072 |		HINGE(L),GLOVE LID			
+----------+					
NA01-64-03Y	1				

0820 NA35**-206394

5560 -3 * DASHBOARD & RELATED PARTS

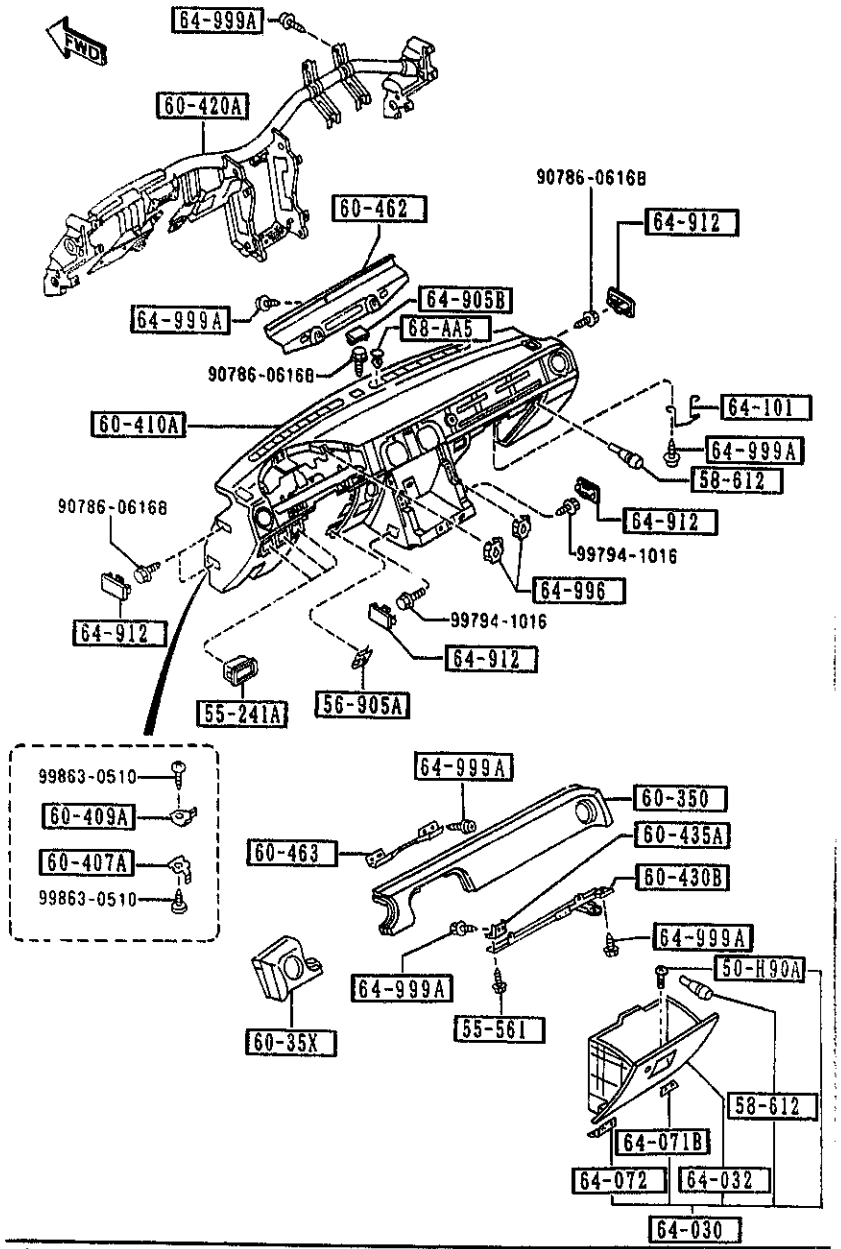

PART NO.	QTY	MODEL/RESTRICTION	MODEL/RESTRICTION	MODEL/RESTRICTION	FROM-TO
64-101		STRIKER			
NA01-64-101	1				
64-9058		COVER,HOLE-(C)			
NA01-64-905	1	(STD COAT BLACK/BLACK)			
00	INT-	NA0 NA1 NA2 BLACK			
N002-64-905	1	(PROTAIN COAT BLACK/TAN)			0B01-
00	INT-	NA1 NA2 BLACK			
64-912		COVER,SIDE			
NA01-64-912	6				
00	INT-	NA0 BLACK			
88	INT-	NA1 TAN			
64-996		NUT,EXPANSION			
GJ21-64-996	8				
64-999A		SCREW,TAPPING			
W201-64-999	37				
68-AA5		FASTENER,DOOR TRIM			
W201-68-AA5 AN(W201-68-AA5A)	4				-1801
00	INT-	NA0 NA1 BLACK			
W201-68-AA5A	4				1801-
00	INT-	NA0 NA1 NA2 BLACK			

0B01 NA35**-217311
1801 NA35**-300014

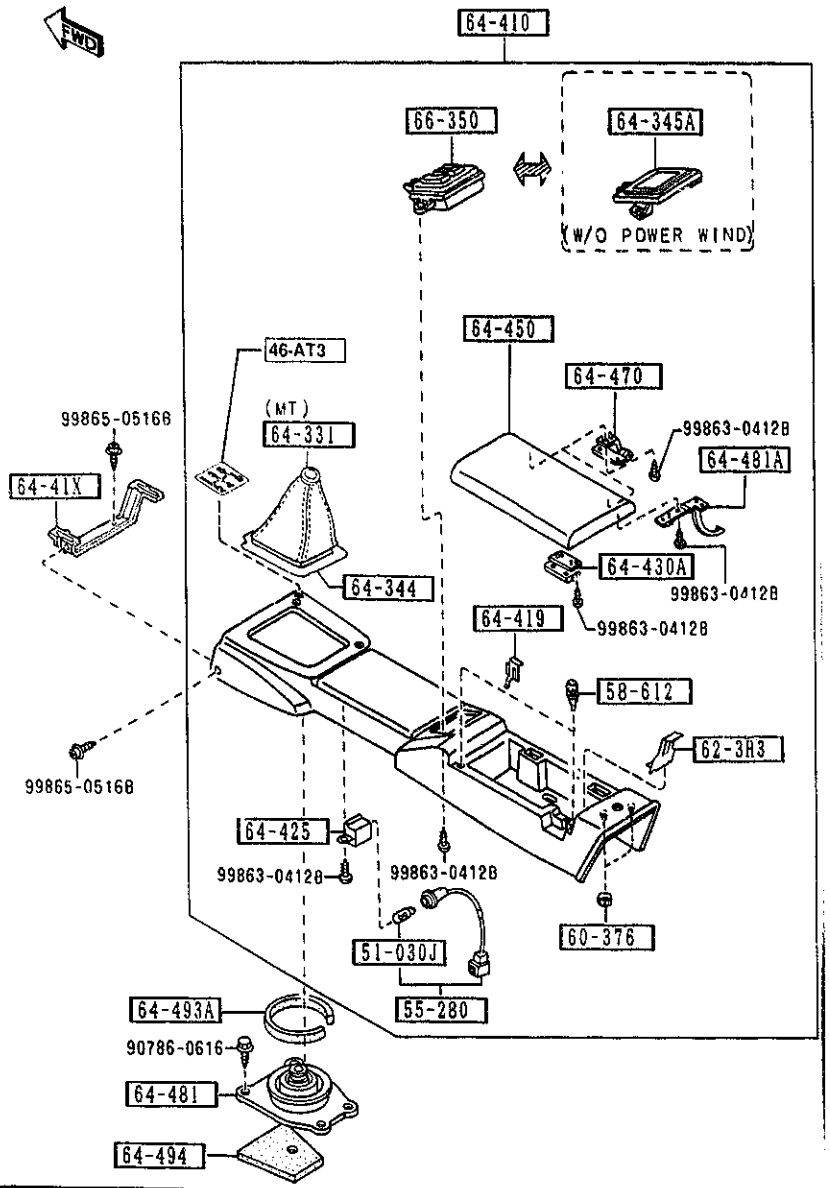

PART NO.	QTY	MODEL/RESTRICTION	MODEL/RESTRICTION	MODEL/RESTRICTION	FROM-TO
46-AT3		LABEL,CHANGE			
N002-46-AT3	1	V-SPECIAL, (WOOD) (MT)			0B01-
51-030J		BULB			
3625-75-139	1	12V 1.4W,FOR WARNING (MT)			
55-280		BULB & SOCKET			
NA01-55-280	1	(MT)			
NA06-55-280	1	BASE, (URETHANE) (AT)			
58-612		CUSHION,RUBBER			
B092-64-046	2				
60-376		NUT,TOP-CRASH PAD			
B092-60-376	2				
62-3H3		COVER,LEVER-OPENER			
NA01-64-424	1				1801-
64-331		BOOT,CHANGE			
NA01-64-331	1	(MT)			
00	INT-	NA0 NA1 NA2 BLACK			
64-344		PLATE,BACK-BOOTS RING			
NA01-64-344B	1	(MT)			
64-345A		BOX,COIN-CONSOLE			
NA01-64-437	1	BASE, (W/O POWER WIND.)			
00	INT-	NA0 NA1 NA2 BLACK			
64-41X		BRACKET,REAR CONSOLE			
NA01-64-416	1				
64-410		CONSOLE,REAR			
NA01-64-410B AN(NA01-64-410C)	1				-0B03
00	INT-	NA0 NA1 BLACK			

0B01 NA35**-217311
0B03 NA35**-217595
1801 NA35**-300014

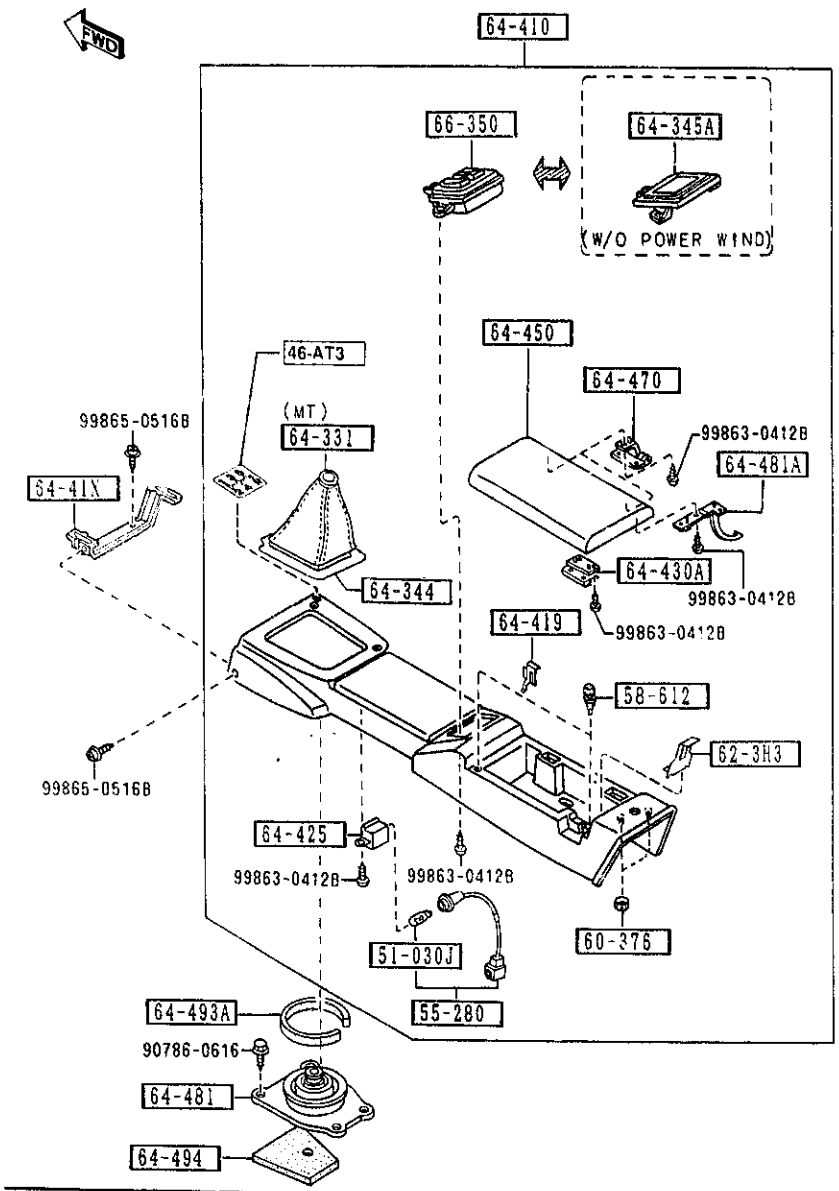

PART NO.	QTY	MODEL/RESTRICTION	MODEL/RESTRICTION	MODEL/RESTRICTION	FROM TO
CONT'D					
NA02-64-410B AN(NA02-64-410C)	1				-0B03
00 INT-		NA0 NA1 BLACK			
NA03-64-410A AN(NA03-64-410B)	1				-0B03
00 INT-		NA0 NA1 BLACK			
NA06-64-410B AN(NA06-64-410C)	1				-0B03
00 INT-		NA0 NA1 BLACK			
N007-64-410 AN(N007-64-410A)	1				0B01-0B03
00 INT-		NA0 NA1 BLACK			
N008-64-410 AN(N008-64-410A)	1				0B01-0B03
00 INT-		NA0 NA1 BLACK			
NA01-64-410C A (NA01-64-410D)	1				0B03-1801
00 INT-		NA0 NA1 BLACK			
NA02-64-410C A (NA02-64-410D)	1				0B03-1801
00 INT-		NA0 NA1 BLACK			
NA03-64-410B A (NA03-64-410C)	1				0B03-1801
00 INT-		NA0 NA1 BLACK			
NA06-64-410C A (NA06-64-410D)	1				0B03-1801
00 INT-		NA0 NA1 BLACK			
N007-64-410A A (N007-64-410B)	1				0B03-1801
00 INT-		NA0 NA1 BLACK			
N008-64-410A A (N008-64-410B)	1				0B03-1801
00 INT-		NA0 NA1 BLACK			
NA01-64-410D	1	BASE, (URETHANE KNOB,W/O POWER WIND.) (MT)			1801-
00 INT-		NA0 NA1 NA2 BLACK			
NA02-64-410D	1	PKG-OPT, (URETHANE KNOB,W/POWER WIND.) (MT)			1801-
00 INT-		NA0 NA1 NA2 BLACK			

0B01 NA35**-217311
0B03 NA35**-217595
1801 NA35**-300014

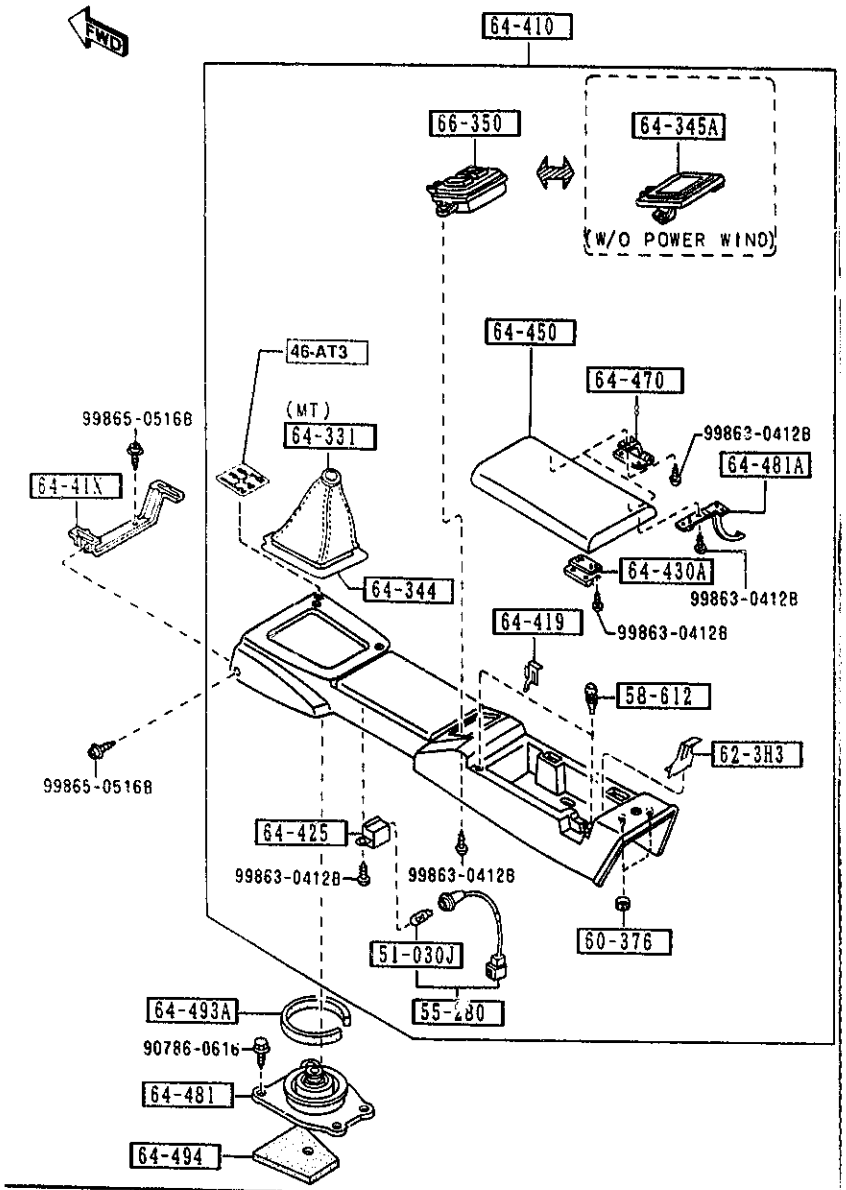

AUNA02

PART NO.	QTY	MODEL/RESTRICTION	MODEL/RESTRICTION	MODEL/RESTRICTION	FROM-TO
CONT'D					
NA03-64-410C	1	BASE, (URETHANE KNOB,W/O POWER WIND.) (AT)			1801-
00	INT-	NA0 NA1 NA2 BLACK			
NA06-64-410D	1	PKG-OPT, (URETHANE KNOB,W/POWER WIND.) (AT)			1801-
00	INT-	NA0 NA1 NA2 BLACK			
N007-64-410B	1	(WOOD KNOB,W/O POWER WIND.) (MT)			1801-
00	INT-	NA0 NA1 NA2 BLACK			
N008-64-410B	1	V-SPECIAL, (WOOD KNOB,W/POWER WIND.) (MT)			1801-
00	INT-	NA0 NA1 NA2 BLACK			
64-419		CLIP,HARNESS-HAND BRAKE			
H260-64-419	1	PKG-OPT, V-SPECIAL, (W/POWER WIND.)			
64-425		CASE,LAMP			
NA01-64-414	1				
64-430A		LOCK,CONSOLE-REAR			
FB01-64-430	1				
64-450		LID,CONSOLE			
NA01-64-450A	1				
00	INT-	NA0 NA1 NA2 BLACK			
64-470		HINGE			
NA01-64-45XA	2				
00	INT-	NA0 NA1 NA2 BLACK			
64-481		INSULATOR NO.1,CHANGE			
NA01-64-481A	1	(MT)			
64-431A		STOPPER,CONSOLE LID			
NA01-64-452	1				
00	INT-	NA0 NA1 NA2 BLACK			

1801 NA35**-300014

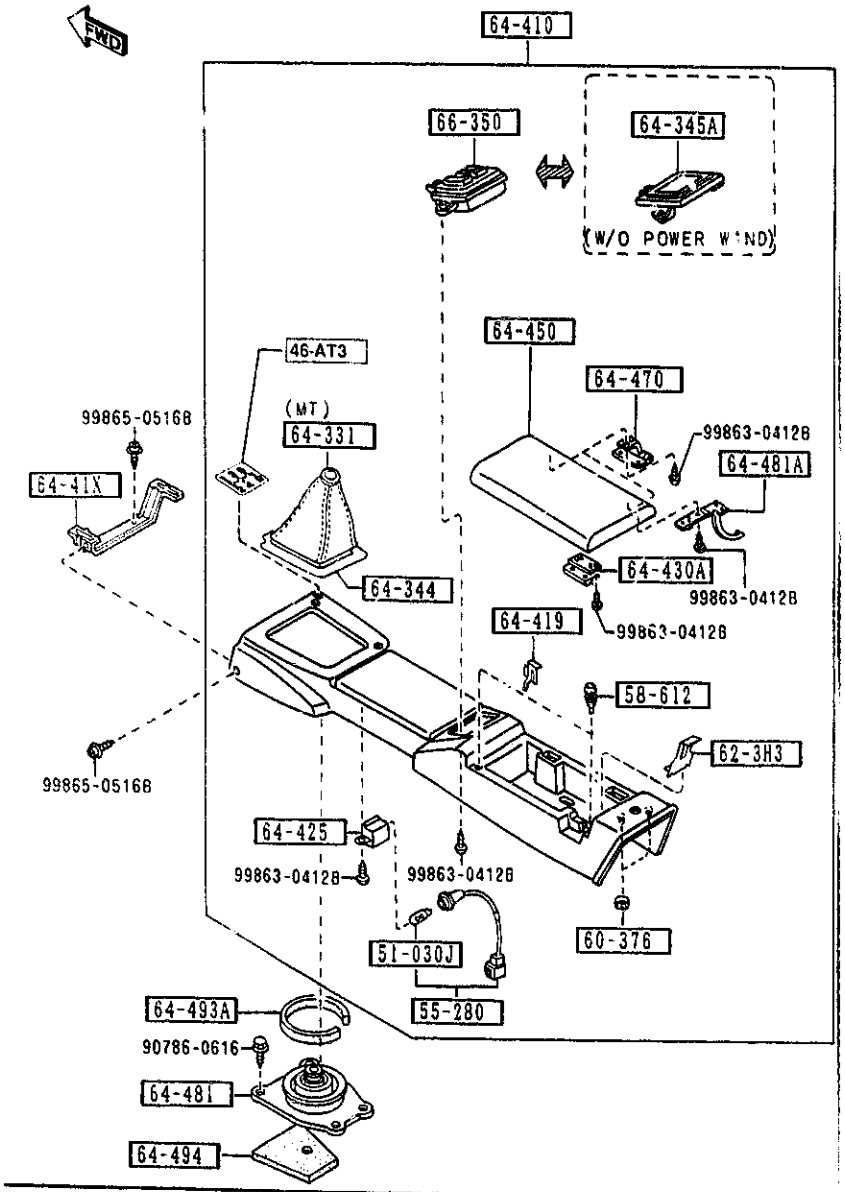

AUNA02

PART NO.	QTY	MODEL/RESTRICTION	MODEL/RESTRICTION	MODEL/RESTRICTION	FROM-TO
64-493A		PACK,SILENT			
H001-64-493	1	(MT)			
64-494		PAD,CHANGE BOOT			
FB01-64-495	1	(MT)			
66-350		SWITCH,POWER WINDOW			
NA01-66-350A	1	PKG-OPT, V-SPECIAL, (W/POWER WIND.) (MT)			
00	INT-	NA0 NA1 NA2 BLACK			
NA03-66-350	1	PKG-OPT, V-SPECIAL, (W/POWER WIND.) (AT)			
00	INT-	NA0 NA1 NA2 BLACK			

5580 VENTILATOR

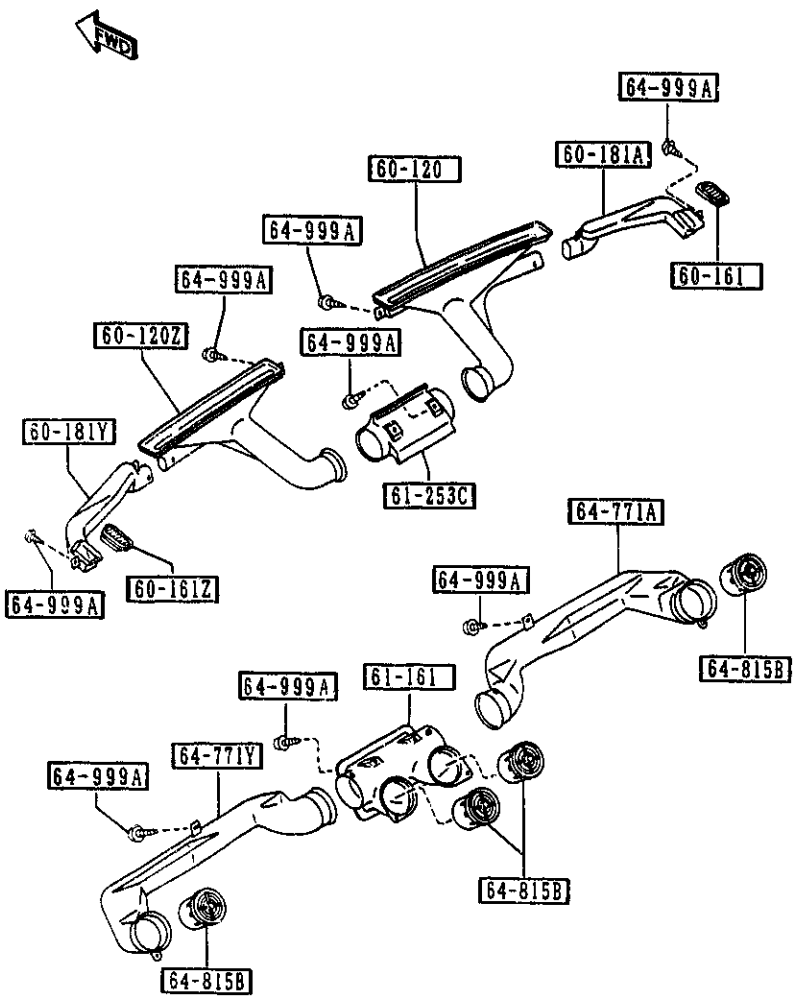

PART NO.	QTY	MODEL/RESTRICTION	MODEL/RESTRICTION	MODEL/RESTRICTION	FROM-TO
60-120		NOZZLE(R),DEFROSTER			
NA01-60-121	1				
60-120Z		NOZZLE(L),DEFROSTER			
NA01-60-141	1				
60-161		GRILLE(R),DEMISTER			
NA01-60-161	1	(STD COAT BLACK/BLACK)			
0C	INT-	NA0 NA1 NA2 BLACK			
N002-60-161	1	(PROTAIN COAT BLACK/TAN)			0B01-
00	INT-	NA1 NA2 BLACK			
60-161Z		GRILLE(L),DEMISTER			
NA01-60-171	1	(STD COAT BLACK/BLACK)			
00	INT-	NA0 NA1 NA2 BLACK			
N002-60-171	1	(PROTAIN COAT BLACK/TAN)			0B01-
00	INT-	NA1 NA2 BLACK			
60-181A		DUCT(R),SIDE DEMIST.			
NA01-60-183	1				
60-181Y		DUCT(L),SIDE DEMIST.			
NA01-60-193	1				
61-161		DUCT,CENTER			
NA01-61-161 AN(NA01-61-161A)	1				-0801
NA01-61-161A	1				0801-
61-253C		HOSE(C),DEFROSTER			
NA01-61-253	1				
64-771A		DUCT NO.1(R)			
NA01-64-741	1				
64-771Y		DUCT NO.1(L)			
NA01-64-841	1				

0801 NA35**-205068
0B01 NA35**-217311

5580 VENTILATOR

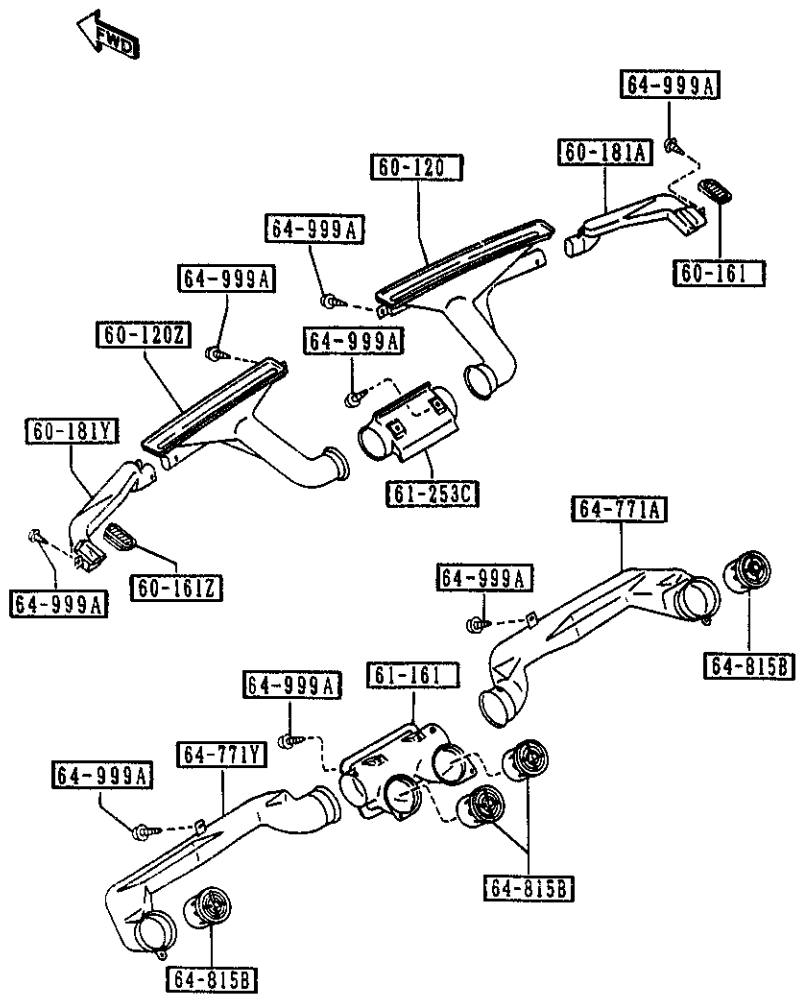

PART NO.	QTY	MODEL/RESTRICTION	MODEL/RESTRICTION	MODEL/RESTRICTION	FROM-TO
64-815B		LOUVER,VENTILATOR			
NA01-64-81X	4				-1801
00	INT-	NA0 NA1 BLACK			
N001-64-81X	4				1801-
00	INT-	NA0 NA1 NA2 BLACK			
64-999A		SCREW,TAPPING			
W201-64-999	11				

1801 NA35**-300014

TYPE / GRADE / SPECIFICATIONS	STA	STB
	BASE	PKG-OPT
SEAT TRIMS	CLOTH 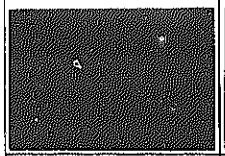 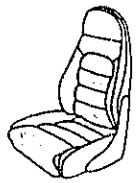	CLOTH 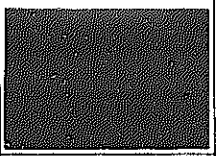 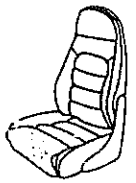
HEAD REST SPEAKER	—	×

TYPE / GRADE / SPECIFICATIONS	STC	STD
	V-SPECIAL	—
SEAT TRIMS	LEATHER 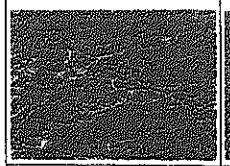 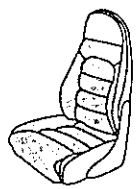	LEATHER 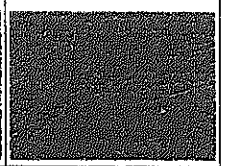 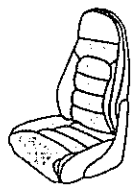
HEAD REST SPEAKER	×	—

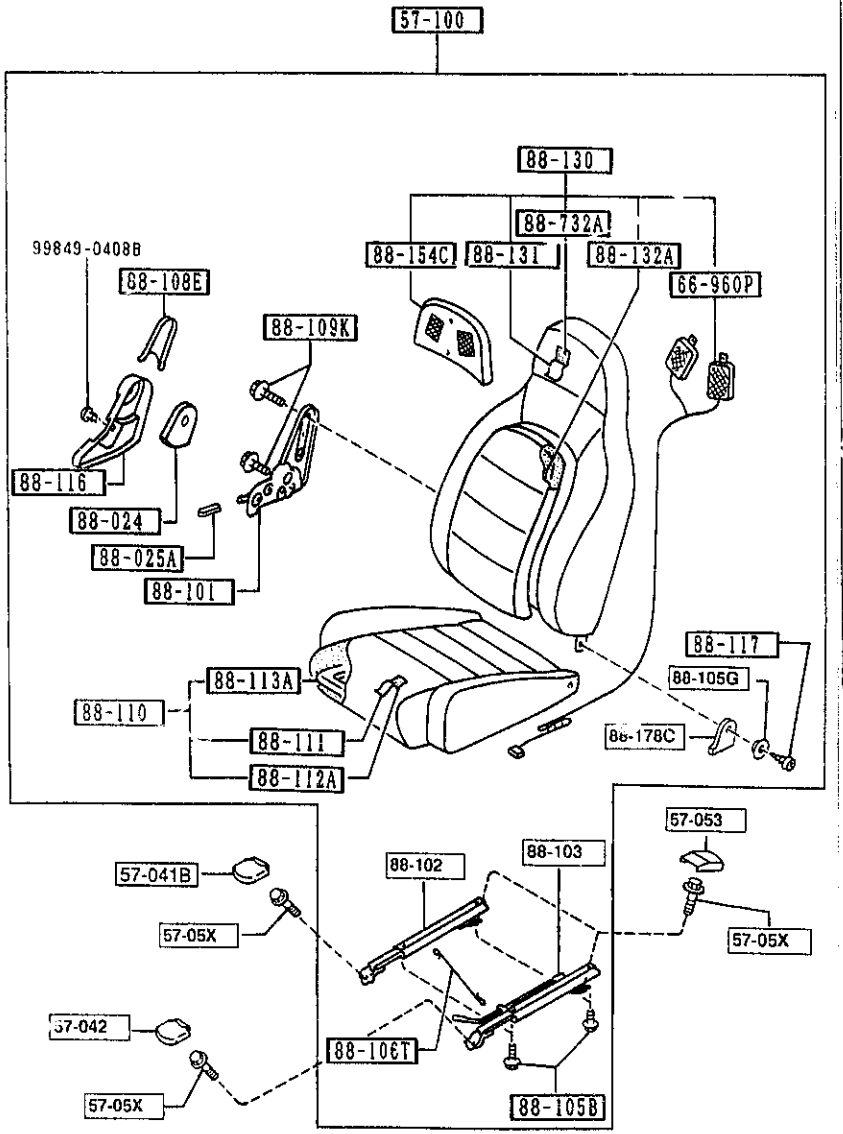
57-100
88-130
88-732A
88-154C
88-131
88-132A
66-960P
99849-04088
88-108E
88-109K
88-116
88-024
88-025A
88-101
88-117
88-105G
88-113A
88-110
88-111
88-112A
88-178C
57-053
57-041B
88-102
88-103
57-05X
57-05X
57-042
88-106T
57-05X
88-105B

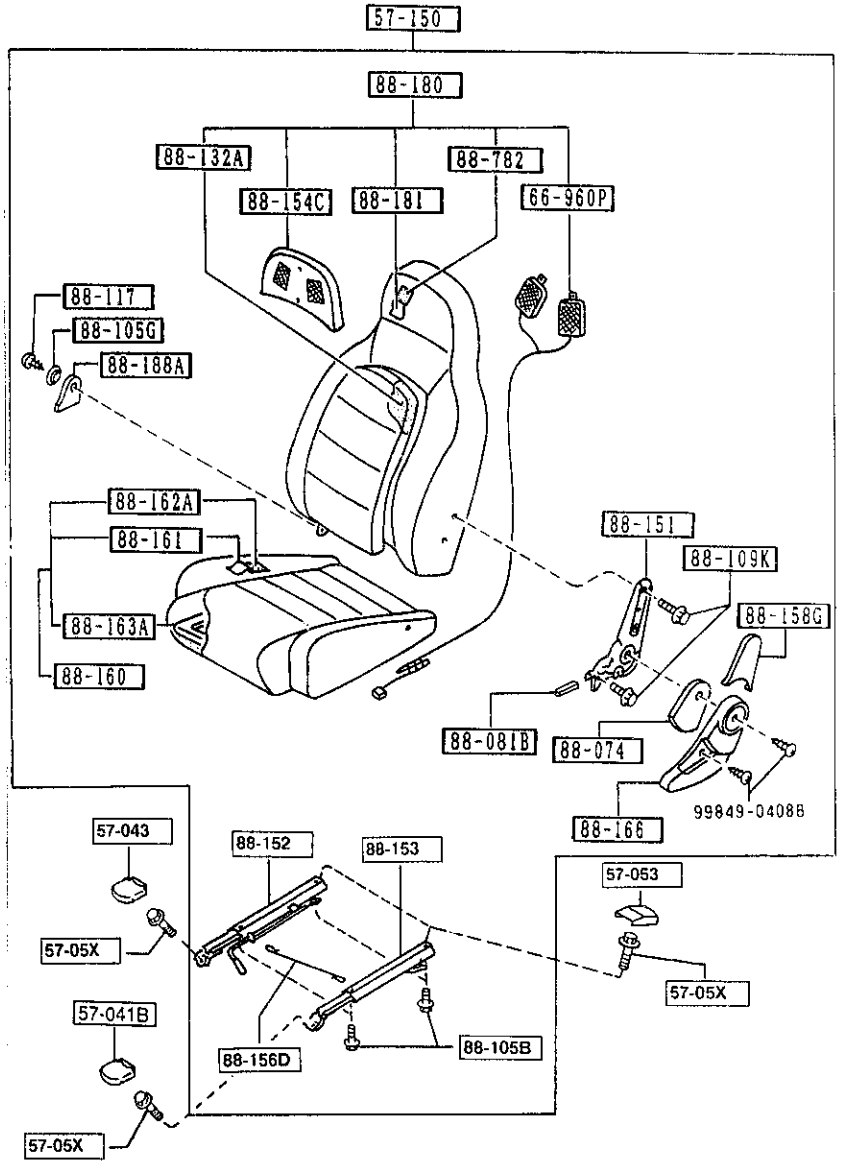
57-150
88-180
88-132A
88-782
88-154C
88-181
66-960P
88-117
88-105G
88-188A
88-162A
88-161
88-163A
88-160
88-151
88-109K
88-158G
88-081B
88-074
99849-04088
88-166
57-043
88-152
88-153
57-053
57-05X
57-05X
57-041B
88-156D
88-105B
57-05X

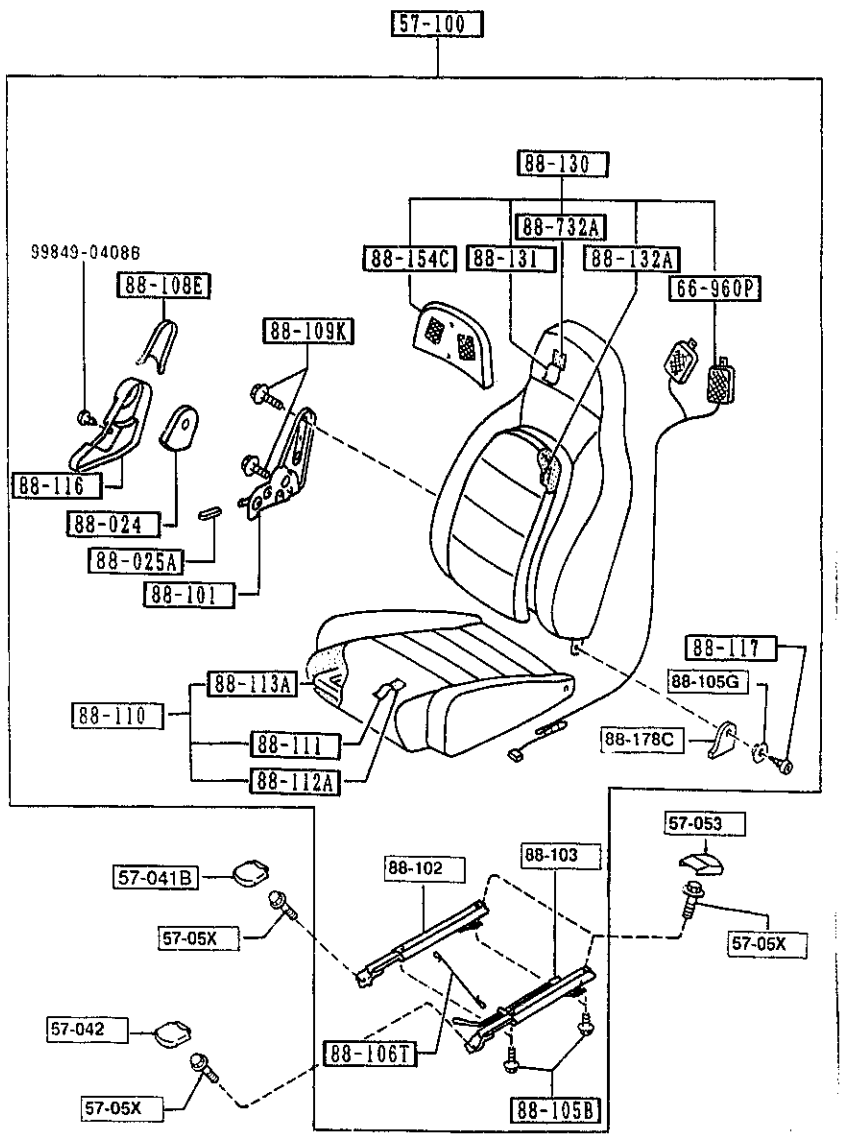

PART NO.	QTY	MODEL/RESTRICTION	MODEL/RESTRICTION	MODEL/RESTRICTION	FROM-TO
57-041B		COVER NO.1,ADJ-FRT			
*J001-57-041	2	V-SPECIAL, (LEATHER)			0B01-
* 40 INT-		NA0 NA1 DARK GRAY			
57-042		COVER NO.2,ADJ-FRT			
N005-57-042	1	V-SPECIAL, (LEATHER)			0B01-
40 INT-		NA0 NA1 DARK GRAY			
57-043		COVER NO.3,ADJ-FRT			
N005-57-043	1	V-SPECIAL, (LEATHER)			0B01-
40 INT-		NA0 NA1 DARK GRAY			
57-05X		BOLT,LINK			
8455-57-05X	8				
57-053		COVER,ADJUSTER-REAR			
J001-57-051	4	V-SPECIAL, (LEATHER)			0B01-
40 INT-		NA0 NA1 DARK GRAY			
57-100		SEAT(R),FRONT			
NA01-57-100F A (NA01-57-100G)	1				-2101
00 INT-		NA0 BLACK			
NA02-57-100F A (NA02-57-100G)	1				-2101
00 INT-		NA0 BLACK			
NA23-57-100 A (NA23-57-100A)	1				0B01-2101
88 INT-		NA1 TAN			
NA24-57-100 A (NA24-57-100A)	1				1801-2101
88 INT-		NA1 TAN			
NA01-57-100G	1	BASE, (NAN1 STA TYPE)			2101-
00 INT-		NA0 BLACK			
NA02-57-100G	1	PKG-OPT, (NAN1 STB TYPE)			2101-
00 INT-		NA0 BLACK			

0B01 NA35**-217311
1801 NA35**-300014
2101 NA35**-313914

(THIS ILLUSTRATION CONSISTS OF 3 PAGES)

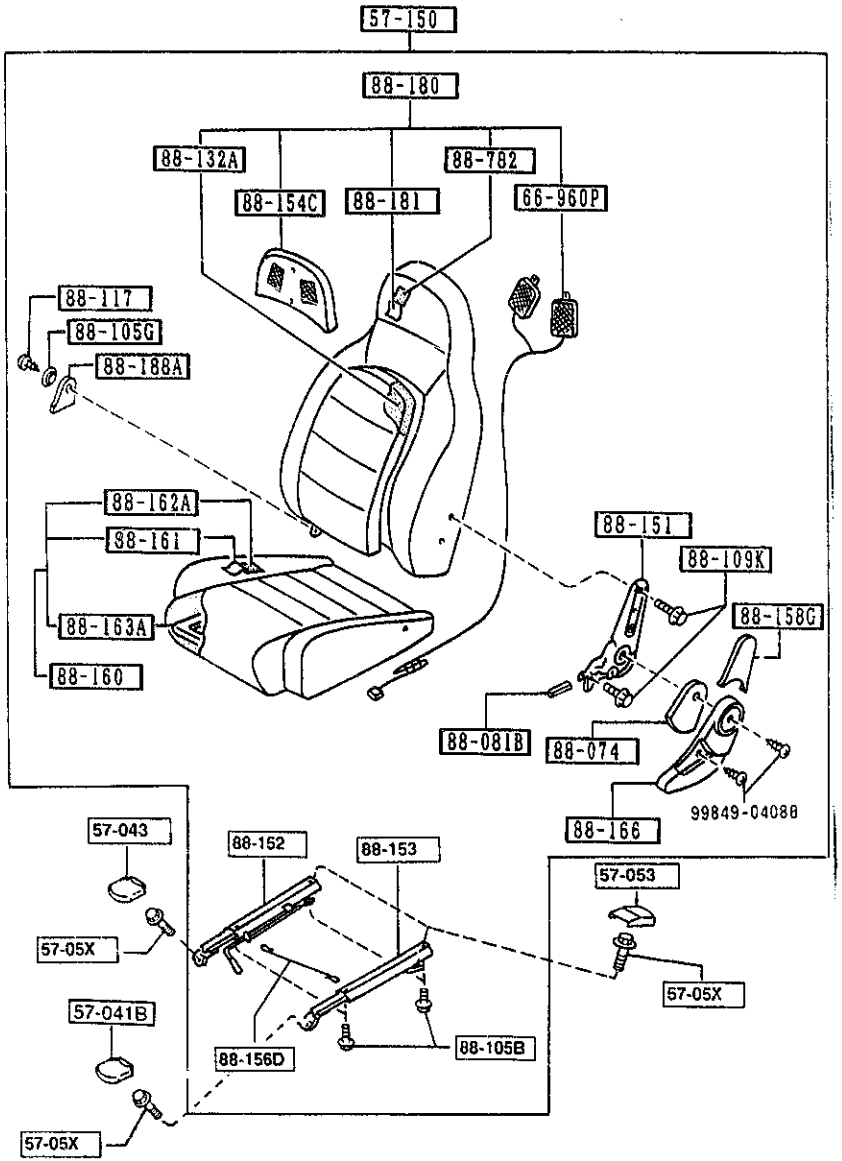

PART NO.	QTY	MODEL/RESTRICTION	MODEL/RESTRICTION	MODEL/RESTRICTION	FROM-TO
CONT'D NA23-57-100A	1	V-SPECIAL, (NAN1 STC TYPE)			2101-
88	INT-	NA1 TAN			
NA24-57-100A	1	(NAN1 STD TYPE)			2101-
88	INT-	NA1 TAN			
+----------+ | 57-150 | +----------+		SEAT(L),FRONT			
NA01-57-150F A (NA01-57-150G)	1				-2101
00	INT-	NA0 BLACK			
NA02-57-150F A (NA02-57-150G)	1				-2101
00	INT-	NA0 BLACK			
NA23-57-150 A (NA23-57-150A)	1				0801-2101
88	INT-	NA1 TAN			
NA24-57-150 A (NA24-57-150A)	1				1801-2101
88	INT-	NA1 TAN			
NA01-57-150G	1	BASE, (NAN1 STA TYPE)			2101-
00	INT-	NA0 BLACK			
NA02-57-150G	1	PKG-OPT, (NAN1 STB TYPE)			2101-
00	INT-	NA0 BLACK			
NA23-57-150A	1	V-SPECIAL, (NAN1 STC TYPE)			2101-
88	INT-	NA1 TAN			
NA24-57-150A	1	(NAN1 STD TYPE)			2101-
88	INT-	NA1 TAN			
+----------+ | 66-960P | +----------+		SPEAKER,PILLOW-SEAT			
NA04-66-960A	2	PKG-OPT, (W/HEAD SPEAKER)			
+----------+ | 88-024 | +----------+		PROTR(R),SEAT BELT			
NA01-88-033	1				
+----------+ | 88-025A | +----------+		KNOB(R),KNUCKLE			
NA01-88-034	1				
00	INT-	NA0 BLACK			

0801 NA35**-217311
1801 NA35**-300014
2101 NA35**-313914

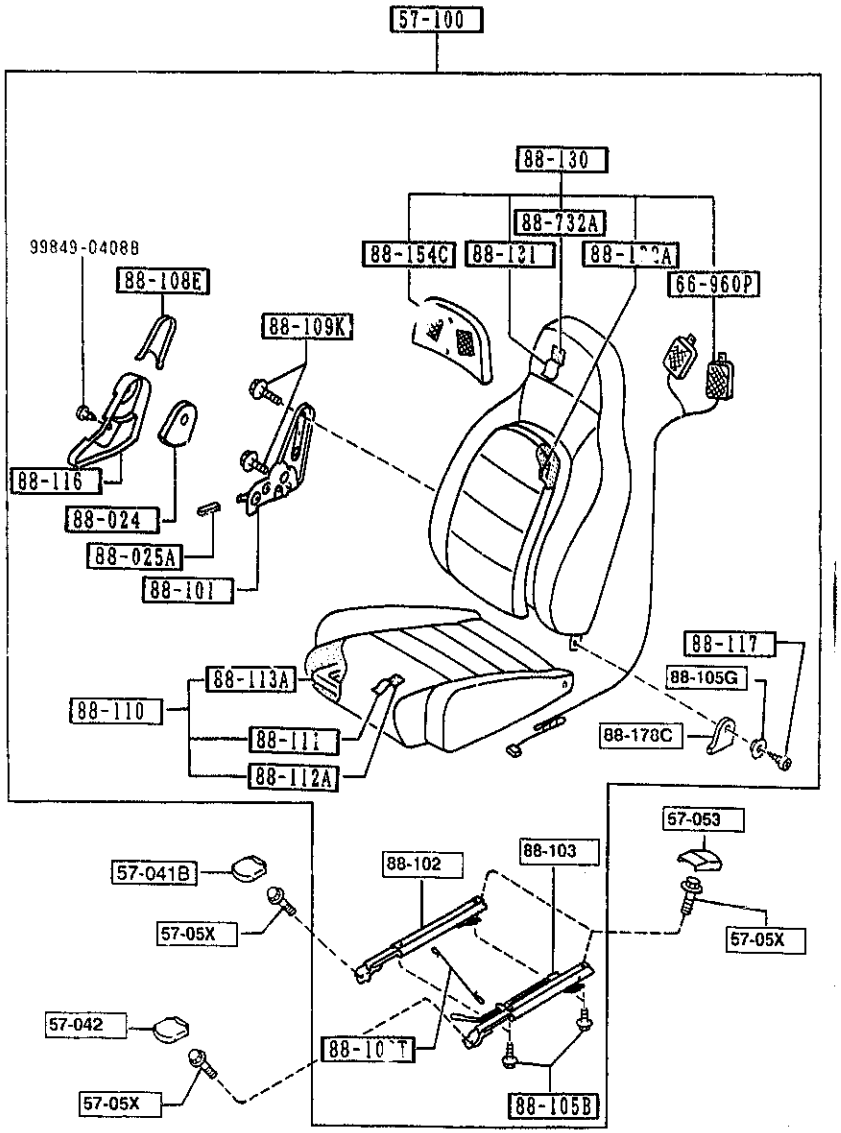

PART NO.	QTY	MODEL/RESTRICTION	MODEL/RESTRICTION	MODEL/RESTRICTION	FROM TO
CONT'D					
88	INT-	NA1 TAN			
88-074		PROTR(L),SEAT BELT			
NA01-88-083	1				
88-081B		KNOB(L),KNUCKLE			
NA01-88-084	1				
00	INT-	NA0 BLACK			
88	INT-	NA1 TAN			
88-101		KNUCKLE(R),RECLINING			
NA01-88-101A	1				
88-102		ADJUSTER,NO.1			
NA01-88-102A	1				
88-103		ADJUSTER,NO.2			
NA01-88-103A	1				
88-105B		BOLT,LINK			
H260-88-105	8				
88-105G		BUSH,HINGE			
H260-88-108	2				
02	INT-	NA0 NA1 NA2 BLACK			
88	INT-	NA1 TAN			
88-106T		WIRE,CONNECT			
NA01-88-106	1				
88-108E		COVER(R),SEAT BACK			
NA01-88-036	1				
00	INT-	NA0 BLACK			
88	INT-	NA1 TAN			
88-109K		SCREW,KNUCKLE			
H260-88-109	8				
88-110		CUSHION(R),FRT SEAT			

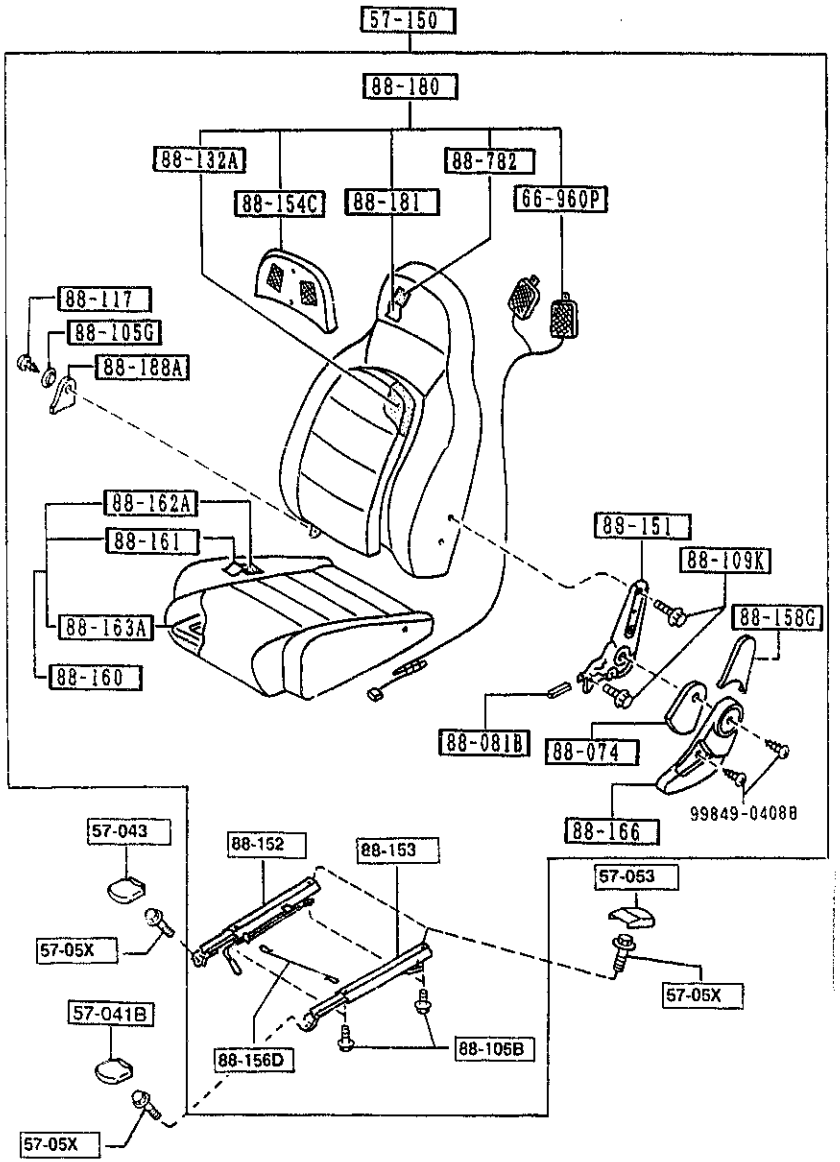

PART NO.	QTY	MODEL/RESTRICTION	MODEL/RESTRICTION	MODEL/RESTRICTION	FROM-TO
CONT'D					
NA01-88-110	1	BASE, PKG-OPT, (CLOTH)			
00	INT-	NA0 BLACK			
NA23-88-110	1	V-SPECIAL, (LEATHER)			0B01-
88	INT-	NA1 TAN			
88-111		TRIM(R),SEAT CUSHION			
NA01-88-111	1	BASE, PKG-OPT, (CLOTH)			
00	INT-	NA0 BLACK			
NA23-88-111	1	V-SPECIAL, (LEATHER)			0B01-
88	INT-	NA1 TAN			
88-112A		PAD(R),CUSHION-FRT			
NA01-88-112	1				
88-113A		FRAME(R),CUSHION-FRT			
NA01-88-113	1				
88-116		COVER(R),KNUCKLE			
NA01-88-031	1				
00	INT-	NA0 BLACK			
88	INT-	NA1 TAN			
88-117		SCREW,KNUCKLE			
H260-88-107	2				
88-130		BACK(R),FRONT SEAT			
NA01-88-130 A (NA01-88-130A)	1				-2101
00	INT-	NA0 BLACK			
NA02-88-130 A (NA02-88-130A)	1				-2101
00	INT-	NA0 BLACK			
NA23-88-130 A (NA23-88-130A)	1				0B01-2101
88	INT-	NA1 TAN			
NA24-88-130 A (NA24-88-130A)	1				1801-2101

0B01 NA35**-217311
1801 NA35**-300014
2101 NA35**-313914

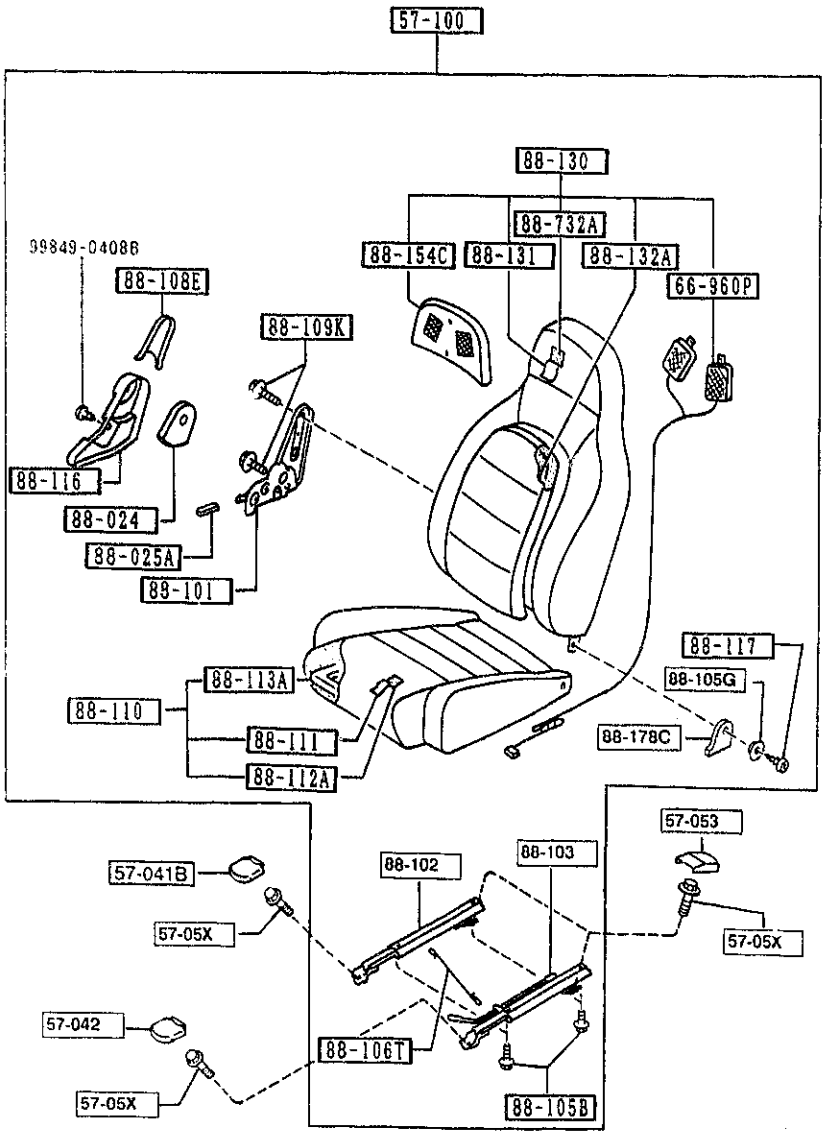

AUNA02 (CONT'D)

PART NO.	QTY	MODEL/RESTRICTION	MODEL/RESTRICTION	MODEL/RESTRICTION	FROM-TO
CONT'D					
88 INT-		NA1 TAN			
NA01-88-130A	1	BASE, (NAN1 STA TYPE)			2101-
00 INT-		NA0 BLACK			
NA02-88-130A	1	PKG-OPT, (NAN1 STB TYPE)			2101-
00 INT-		NA0 BLACK			
NA23-88-130A	1	V-SPECIAL, (NAN1 STC TYPE)			2101-
88 INT-		NA1 TAN			
NA24-88-130A	1	(NAN1 STD TYPE)			2101-
88 INT-		NA1 TAN			
88-131		TRIM(R),SEAT BACK			
NA01-88-131	1	BASE, PKG-OPT, (CLOTH)			
00 INT-		NA0 BLACK			
NA23-88-131	1	V-SPECIAL, (LEATHER)			0B01-
88 INT-		NA1 TAN			
88-132A		PAD(R),BACK-FRT			
NA01-88-132A (NA01-88-132A)	2				-2101
NA01-88-132A	2				2101-
88-151		KNUCKLE(L),RECLINING			
NA01-88-151A	1				
88-152		ADJUSTER NO.3			
NA01-88-152A	1				
88-153		ADJUSTER NO.4			
NA01-88-153A	1				
88-154C		COVER,HEAD REST			
NA01-88-137	2				
88-156D		WIRE,CONNECT			
NA01-88-156	1				

0B01 NA35**-217311
2101 NA35**-313914

(THIS ILLUSTRATION CONSISTS OF 3 PAGES)

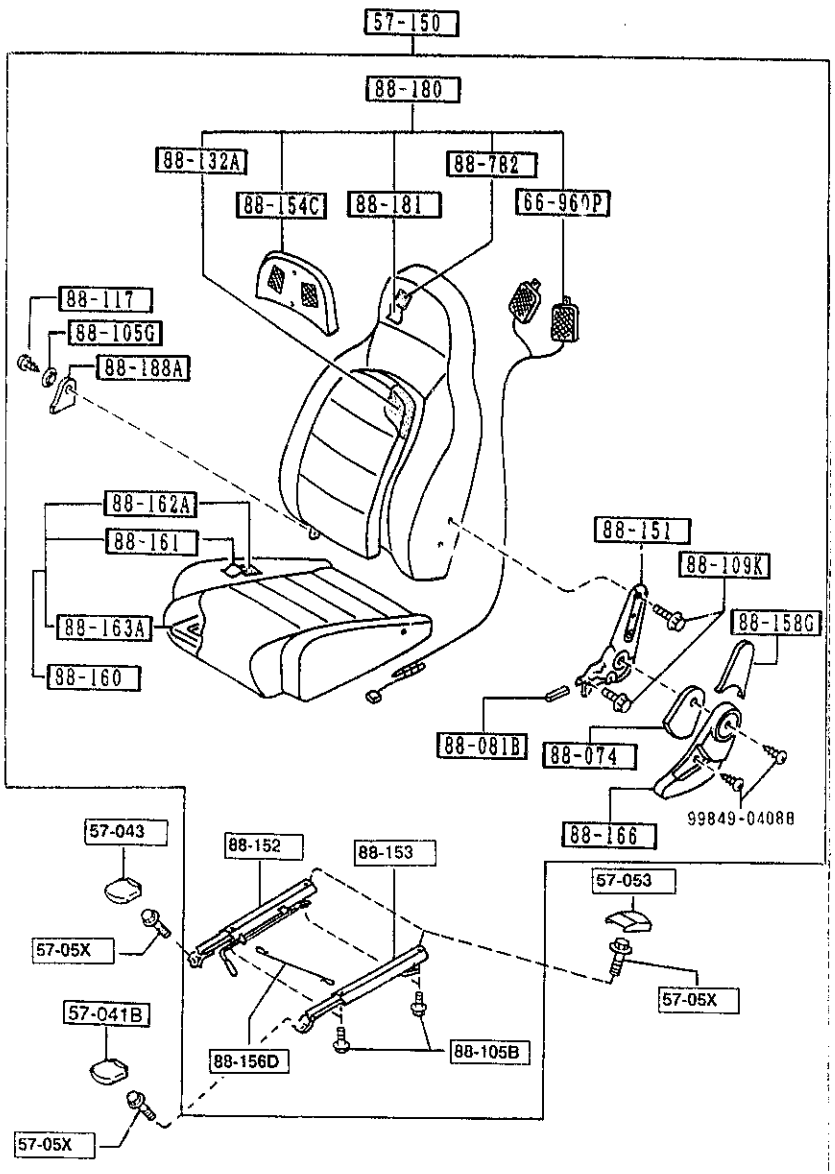

PART NO.	QTY	MODEL/RESTRICTION	MODEL/RESTRICTION	MODEL/RESTRICTION	FROM-TO
88-158G		COVER(L),SEAT BACK			
NA01-88-086	1				
00	INT-	NA0 BLACK			
88	INT-	NA1 TAN			
88-160		CUSHION(L),FRT SEAT			
NA01-88-160	1	BASE, PKG-OPT, (CLOTH)			
00	INT-	NA0 BLACK			
NA23-88-160	1	V-SPECIAL, (LEATHER)			0B01-
88	INT-	NA1 TAN			
88-161		TRIM(L),SEAT CUSHION			
NA01-88-161	1	BASE, PKG-OPT, (CLOTH)			
00	INT-	NA0 BLACK			
NA23-88-161	1	V-SPECIAL, (LEATHER)			0B01-
88	INT-	NA1 TAN			
88-162A		PAD(L),CUSHION-FRT			
NA01-88-162	1	BASE, PKG-OPT, (CLOTH)			
NO05-88-162	1	V-SPECIAL, (LEATHER)			0B01-
88-163A		FRAME(L),CUSHION-FRT			
NA01-88-163	1				
88-166		COVER(L),KNUCKLE			
NA01-88-081	1				
00	INT-	NA0 BLACK			
88	INT-	NA1 TAN			
88-178C		COVER(R),HINGE			
NA01-88-035	1				
00	INT-	NA0 BLACK			
88	INT-	NA1 TAN			

0B01 NA35**-217311

(THIS ILLUSTRATION CONSISTS OF 3 PAGES)

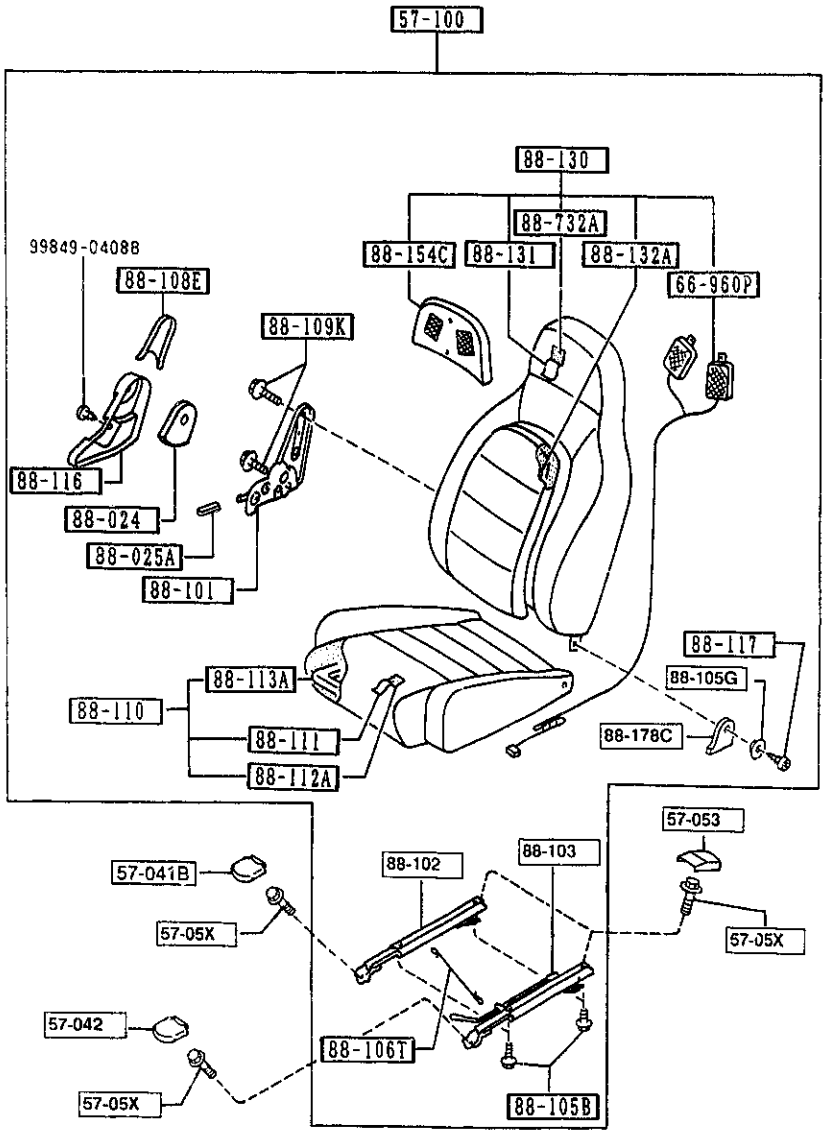

AUNA02 (CONT'D)

PART NO.	QTY	MODEL/RESTRICTION	MODEL/RESTRICTION	MODEL/RESTRICTION	FROM TO
+----------+					
| 88-180 |		BACK(L),FRONT SEAT			
+----------+					
NA01-88-180	1				
A (NA01-88-160A)					-2101
00	INT-	NA0 BLACK			
NA02-88-180	1				
A (NA02-88-160A)					-2101
00	INT-	NA0 BLACK			
NA23-88-180	1				
A (NA23-88-180A)					0B01-2101
88	INT-	NA1 TAN			
NA24-88-180	1				
A (NA24-88-180A)					1801-2101
88	INT-	NA1 TAN			
NA01-88-180A	1	BASE, (NAN1 STA TYPE)			2101-
00	INT-	NA0 BLACK			
NA02-88-180A	1	PKG-OPT, (NAN1 STB TYPE)			2101-
00	INT-	NA0 BLACK			
NA23-88-180A	1	V-SPECIAL, (NAN1 STC TYPE)			2101-
88	INT-	NA1 TAN			
NA24-88-180A	1	(NAN1 STD TYPE)			2101-
88	INT-	NA1 TAN			
+----------+					
| 88-181 |		TRIM(L),SEAT BACK			
+----------+					
NA01-88-181	1	BASE, PKG-OPT, (CLOTH)			
00	INT-	NA0 BLACK			
NA23-88-181	1	V-SPECIAL, (LEATHER)			0B01-
88	INT-	NA1 TAN			
+----------+					
| 88-188A |		COVER(L),HINGE			
+----------+					
NA01-88-085	1				
00	INT-	NA0 BLACK			
88	INT-	NA1 TAN			
+----------+					
| 88-732A |		PAD'B'(R),BACK-FRT			
+----------+					
NA01-88-732	1				
A (NA01-88-732A)					-2101

0B01 NA35**-217311
1801 NA35**-300014
2101 NA35**-313914

(THIS ILLUSTRATION CONSISTS OF 3 PAGES)

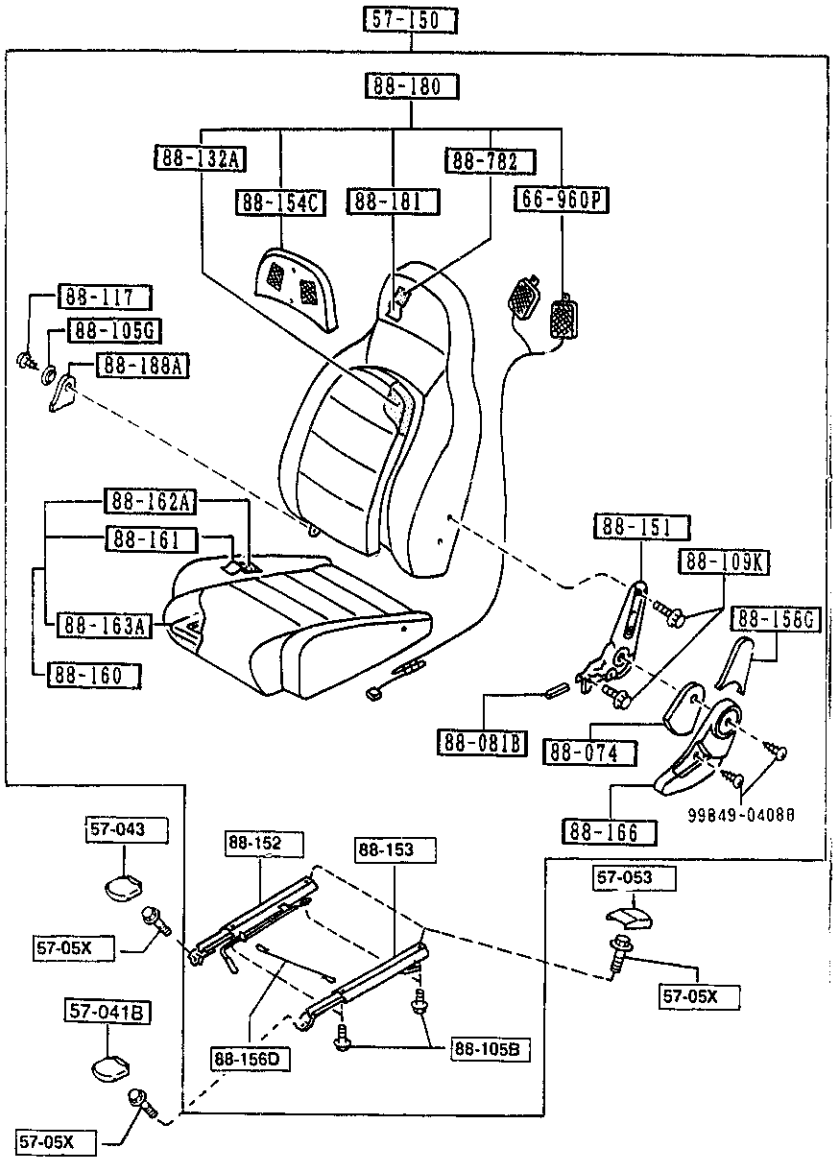

PART NO.	QTY	MODEL/RESTRICTION	MODEL/RESTRICTION	MODEL/RESTRICTION	FROM-TO
CONT'D					
NA01-88-732A	1				2101-
+----------+					
| 88-782 |		PAD'B'(L),BACK-FRT			
+----------+					
NA01-88-782A (NA01-88-782A)	1				-2101
NA01-88-782A	1				2101-

2101 NA35**-313914

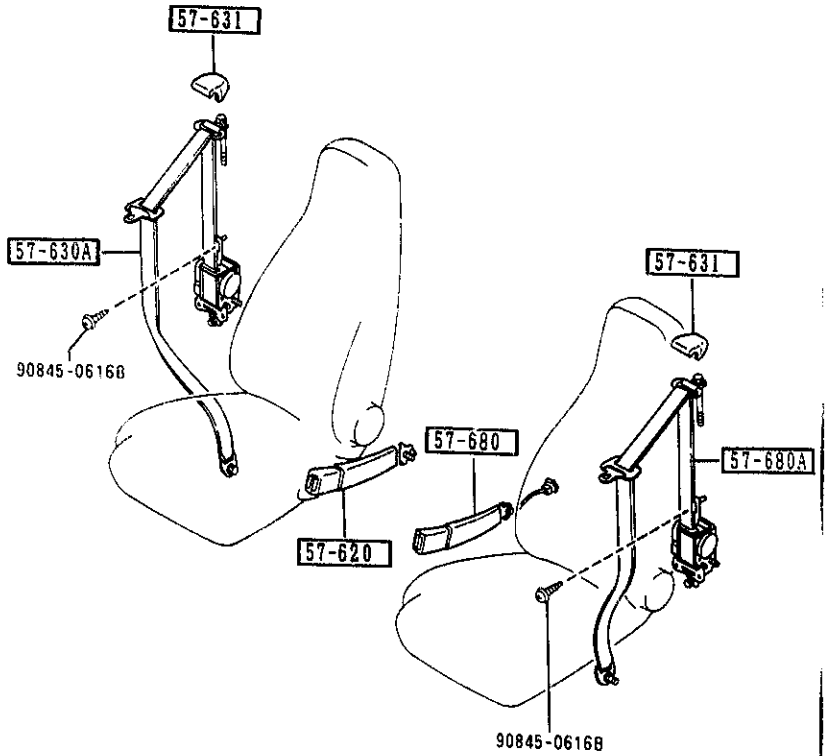

PART NO.	QTY	MODEL/RESTRICTION	MODEL/RESTRICTION	MODEL/RESTRICTION	FROM-TO
57-620		BELT'A',FRONT SEAT			
NA01-57-620	1				
00	INT-	NA0 NA1 NA2 BLACK			
57-630A		BELT'B'(R),FRT SEAT			
NA01-57-630C	1				
00	INT-	NA0 BLACK			
88	INT-	NA1 TAN			
57-631		COVER,ANCHOR			
NA01-57-631B	2				
00	INT-	NA0 NA1 NA2 BLACK			
57-680		BELT'A',FRONT SEAT			
NA01-57-680	1				
00	INT-	NA0 NA1 NA2 BLACK			
57-680A		BELT'B'(L),FRT SEAT			
NA01-57-690A	1				
00	INT-	NA0 BLACK			
88	INT-	NA1 TAN			

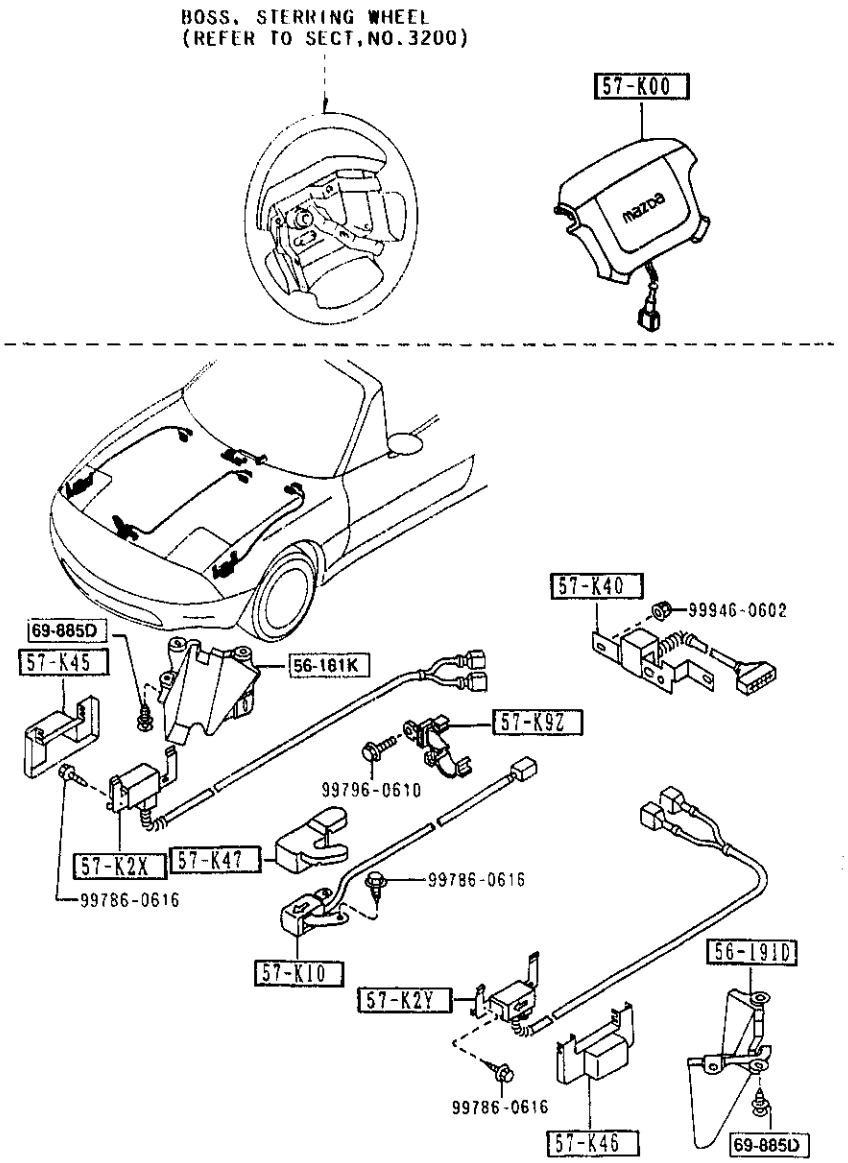

5795 -1 * AIR BAG

PART NO.	QTY	MODEL/RESTRICTION	MODEL/RESTRICTION	MODEL/RESTRICTION	FROM-TO
56-181K		COVER(R),SENSOR-AIR BAG			
NA01-56-191A	1				
56-191D		COVER(L),SENSOR-AIR BAG			
NA01-56-181A	1				
57-K00		MODULE,AIR BAG			
NA01-57-K00A	1				-2101
A (NA01-57-K00B)					
00	INT-	NA0 NA1 BLACK			
NA01-57-K00B	1				2101-
00	INT-	NA0 NA1 NA2 BLACK			
57-K10		SENSOR(C),AIR BAG			
NA01-57-K10H	1				
57-K2X		SENSOR(R),AIR BAG			
NA01-57-K2XJ	1				
57-K2Y		SENSOR(L),AIR BAG			
NA01-57-K2YJ	1				
57-K40		SENSOR,AIR BAG-INNER			
NA01-57-K40D	1				
57-K45		COVER(R),SENSOR			
NA01-57-K45B	1				
57-K46		COVER(L),SENSOR			
NA01-57-K46B	1				
57-K47		COVER(C),SENSOR			
NA01-57-K47B	1				
57-K9Z		BRACKET,CLIP			
NA01-57-K9ZB	1				
69-885D		FASTENER			
NA01-56-145	8				

2101 NA35**-313914

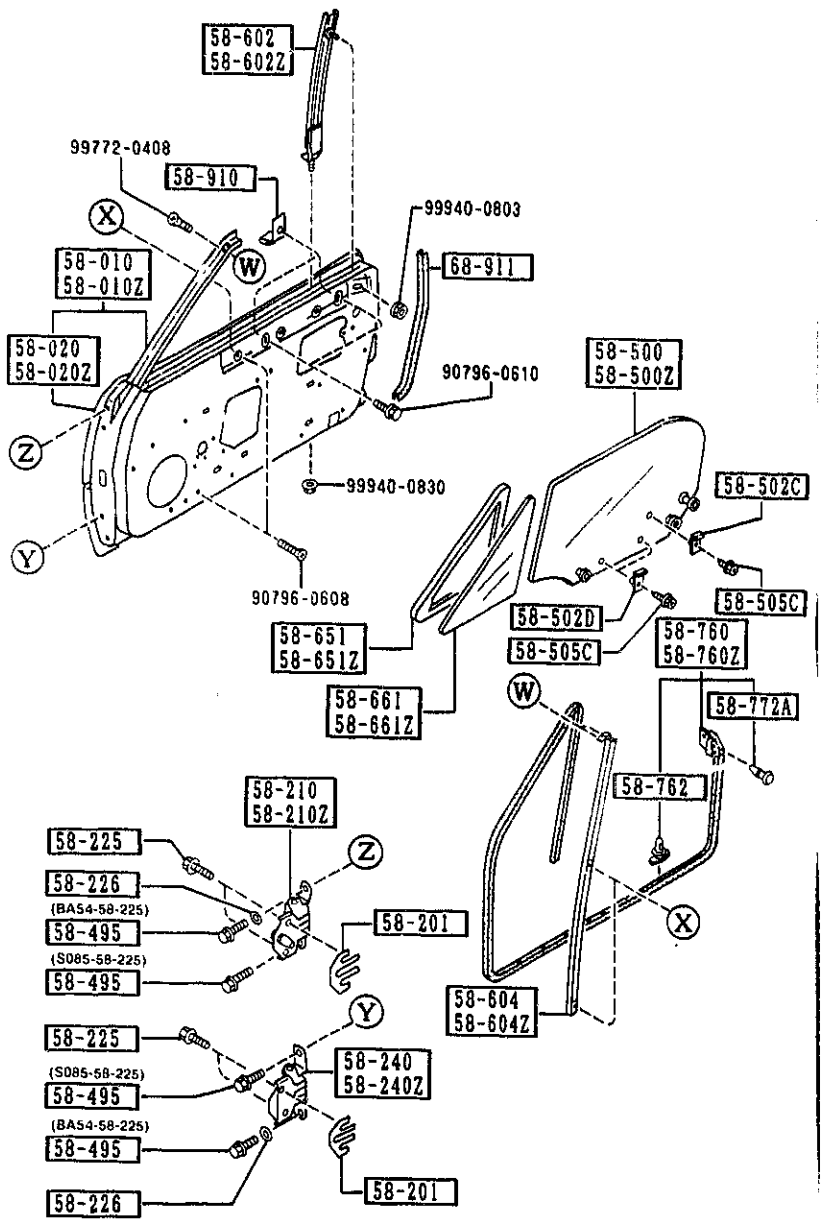

PART NO.	QTY	MODEL/RESTRICTION	MODEL/RESTRICTION	MODEL/RESTRICTION	FROM-TO
58-010		BODY(R),FRONT DOOR			
NAY1-58-020 AN(NAY1-58-020A)	1				-0A01
NAY1-58-020A	1				0A01-
58-010Z		BODY(L),FRONT DOOR			
NAY1-59-020 AN(NAY1-59-020A)	1				-0A01
NAY1-59-020A	1				0A01-
58-020		PANEL(R),OUT.-FRT DOOR			
NA01-58-030A AN(NA01-58-030B)	1				-0A01
NA01-58-030B	1				0A01-
58-020Z		PANEL(L),OUT.-FRT DOOR			
NA01-59-030A AN(NA01-59-030B)	1				-0A01
NA01-59-030B	1				0A01-
58-201		SHIM,HINGE-DOOR			
B092-58-201A	4				
58-210		HINGE(R),DOOR-UPPER			
FB01-58-210	1				
58-210Z		HINGE(L),DOOR-UPPER			
FB01-59-210	1				
58-225		BOLT,SETTING-HINGE LOWER			
B455-58-225	8				
58-226		WASHER,SETTING			
GJ21-58-226	4				
58-240		HINGE(R),DOOR-LOWER			
B156-58-240	1				
58-240Z		HINGE(L),DOOR-LOWER			
B156-59-240	1				

0A01 NA35**-213219

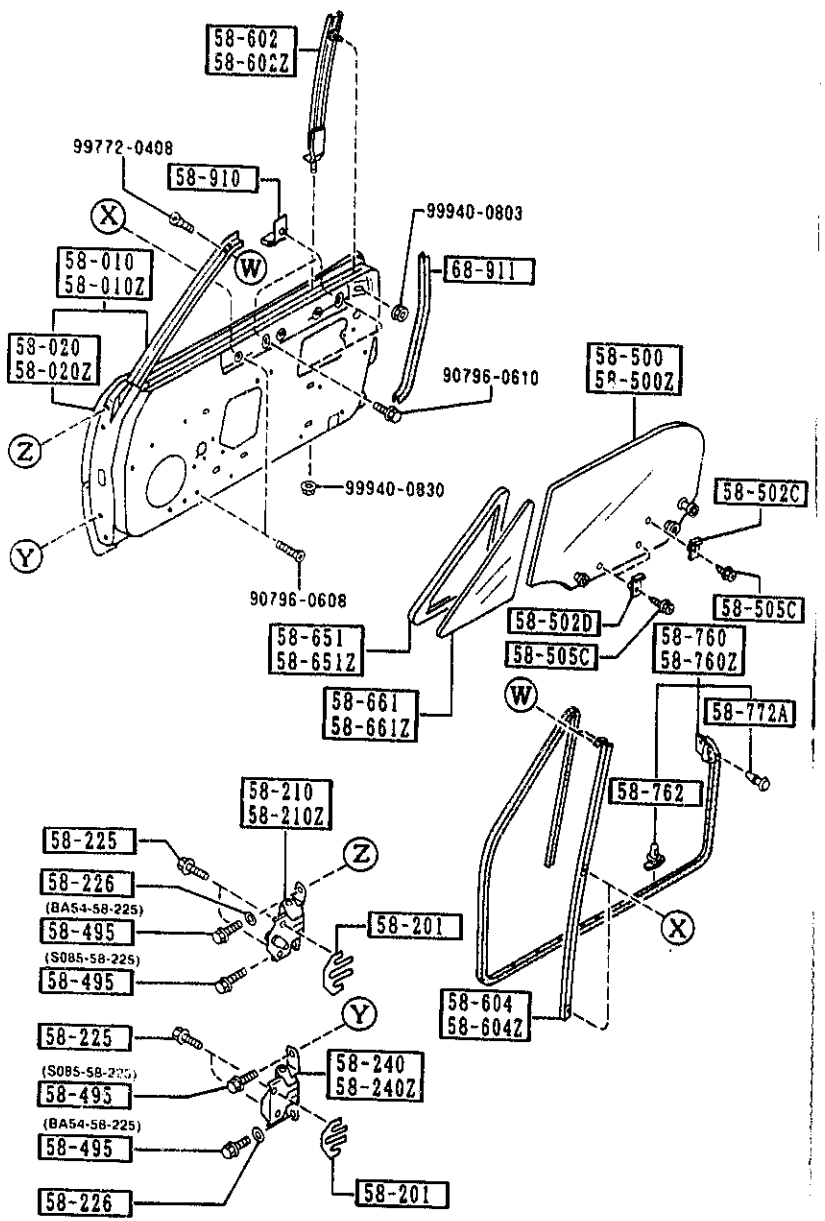

PART NO.	QTY	MODEL/RESTRICTION	MODEL/RESTRICTION	MODEL/RESTRICTION	FROM-TO
58-495		BOLT,SET			
BA54-58-225	4				
S085-58-225	4				
58-500		GLASS(R),DOOR-FRT			
NA01-58-510	1				
58-500Z		GLASS(L),DOOR-FRT			
NA01-59-510	1				
58-502C		GROMMET,SCREW			
B235-58-502	2				
58-502D		GROMMET,SCREW-DOOR GLASS			
UB39-58-502A	4				
58-505C		SCREW,WINDOW REGULATOR			
B092-58-505	6				
58-602		GUIDE'B'(R),GLASS			
NA01-58-603A	1				
A (NA01-58-603C)					-0B20
NA01-58-603C	1				0B20-
58-602Z		GUIDE'B'(L),GLASS			
NA01-59-603A					
A (NA01-59-603C)					-0B20
NA01-59-603C	1				0B20-
58-604		CHANNEL(R),DIVISION-DOOR			
NA01-58-604B	1				
58-604Z		CHANNEL(L),DIVISION-DOOR			
NA01-59-604B	1				
58-651		WEATHERSTRIP(R)			
NA01-58-651A	1				
58-651Z		WEATHERSTRIP(L)			
NA01-59-651A	1				

0B20 NA35**-219417

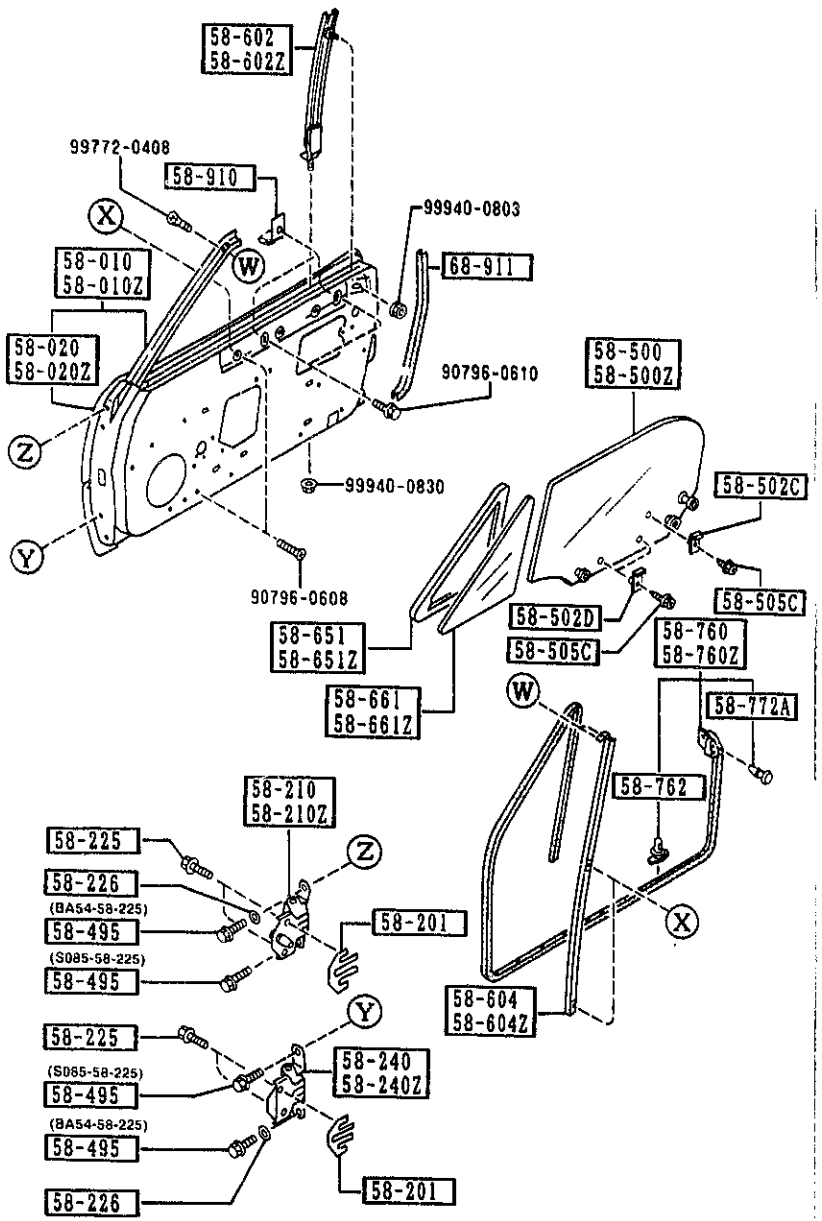

PART NO.	QTY	MODEL/RESTRICTION	MODEL/RESTRICTION	MODEL/RESTRICTION	FROM-TO
58-661		GLASS(R),VENTILATOR			
NA01-58-661	1				
58-661Z		GLASS(L),VENTILATOR			
NA01-59-661	1				
58-760		WEATHERSTRIP(R),DOOR			
NA01-58-760D	1				
58-760Z		WEATHERSTRIP(L),DOOR			
NA01-59-760D	1				
58-762		FASTENER			
G031-58-762	42				
58-772A		FASTENER			
1011-58-772	4				
58-910		STOPPER,GLASS			
H272-58-911	4				
68-911		WELT,SEAMING			
NA01-68-911	2				
00	INT-	NA0 NA1 NA2 BLACK			

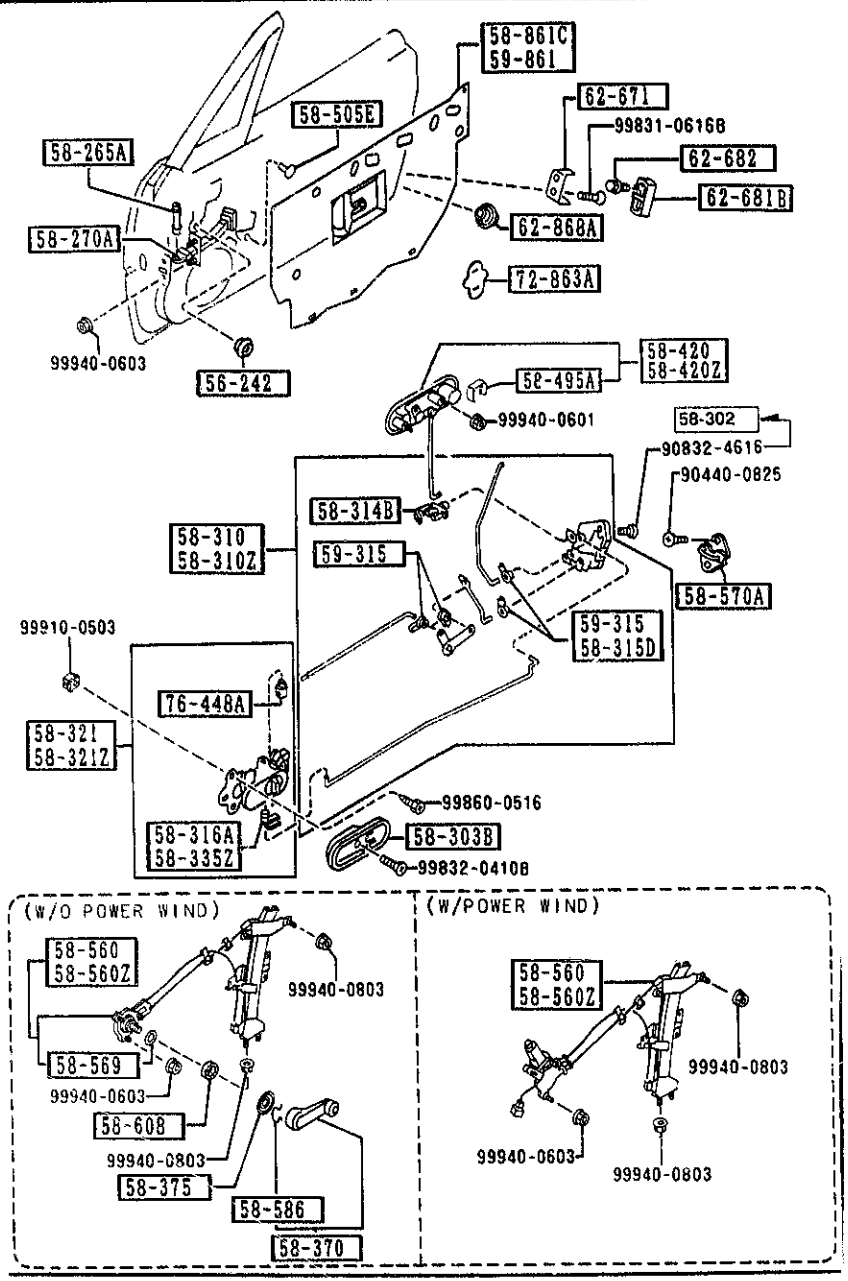

AUNA02

PART NO.	QTY	MODEL/RESTRICTION	MODEL/RESTRICTION	MODEL/RESTRICTION	FROM-TO
56-242		PLUG,DRAIN			
0118-56-242B	2				
58-265A		PIN,CHECKER			
H260-58-265C	2				
58-270A		CHECKER,DOOR			
NA01-58-270A	2				
58-302		SCREW,TAPPING-DOOR LOCK			
HG30-58-302A	6				1601-
58-303B		COVER,INNER HANDLE			
NA01-58-303	2				
00	INT-	NA0 NA1 NA2 BLACK			
58-310		LOCK(R),DOOR			
NA01-58-310B	1				
58-310Z		LOCK(L),DOOR			
NA01-59-310B	1				
58-314B		JOINT			
H043-72-411	2				
58-315D		CLIP (R)			
G030-58-315	3	(FOR LEFT)			
58-316A		CLIP			
B001-59-335	1	(FOR RIGHT)			
58-321		HANDLE(R),INNER			
NA01-58-330A	1				
00	INT-	NA0 NA1 NA2 BLACK			
58-321Z		HANDLE(L),INNER			
NA01-59-330A	1				
00	INT-	NA0 NA1 NA2 BLACK			
58-335Z		CLIP(L),INNER HANDLE			

1601 NA35**-235561

CAT. AUNA02-07

1993-12

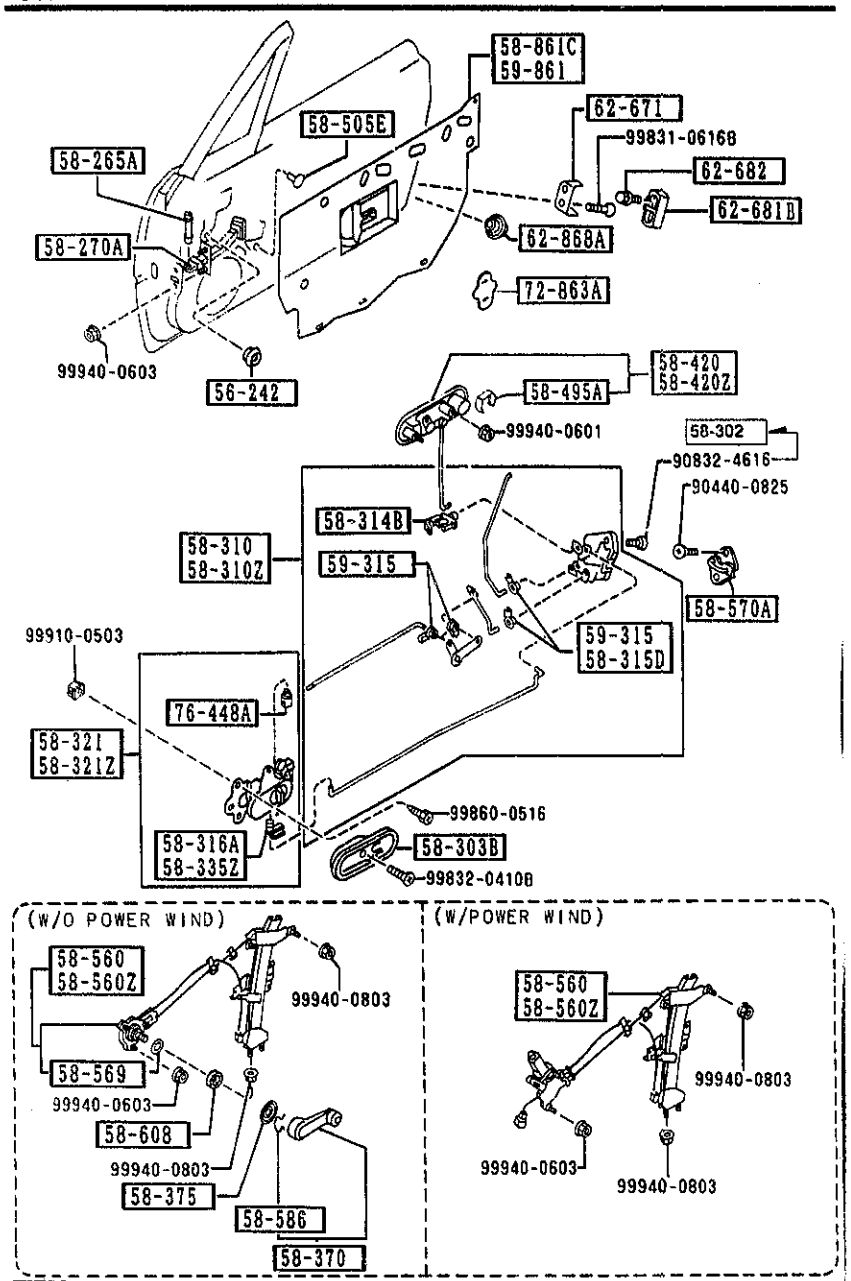

AUNA02

PART NO.	QTY	MODEL/RESTRICTION	MODEL/RESTRICTION	MODEL/RESTRICTION	FROM-TO
CONT'D					
FB01-58-335	1				
+----------+					
| 58-370 |		HANDLE,REGULATOR			
+----------+					
B092-58-580	2	BASE, (W/O POWER WIND.)			
00	INT-	NA0 NA1 NA2 BLACK			
+----------+					
| 58-375 |		ESCUTCHEON			
+----------+					
B001-58-582A	2	BASE, (W/O POWER WIND.)			
00	INT-	NA0 NA1 NA2 BLACK			
+----------+					
| 58-420 |		HANDLE(R),OUT.			
+----------+					
NA01-58-410C AN(NA01-58-410D)	1				-0A02
NA01-58-410D	1				0A02-
+----------+					
| 58-420Z |		HANDLE(L),OUT.			
+----------+					
NA01-59-410C AN(NA01-59-410D)	1				-0A02
NA01-59-410D	1				0A02-
+----------+					
| 58-495A |		RETAINER,LOCK CYL.			
+----------+					
G211-58-495	2				
+----------+					
| 58-505E |		CAP			
+----------+					
B092-58-355	2	BASE, (W/O POWER WIND.)			
+----------+					
| 58-560 |		REGULATOR(R),WINDOW			
+----------+					
NA01-58-560B A (NA01-58-560C)	1				-0B14
NA02-58-560B A (NA02-58-560C)	1				-0B14
NA01-58-560C	1	BASE, (W/O POWER WIND.)			0B14-
NA02-58-560C	1	PKG-OPT, V-SPECIAL, (W/POWER WIND.)			0B14-
+----------+					
| 58-560Z |		REGULATOR(L),WINDOW			
+----------+					
NA01-59-560B A (NA01-59-560C)	1				-0B14
NA02-59-560B A (NA02-59-560C)	1				-0B14

0A02 NA35**-213378
0B14 NA35**-218786

CAT. AUNA02-07

1993-12

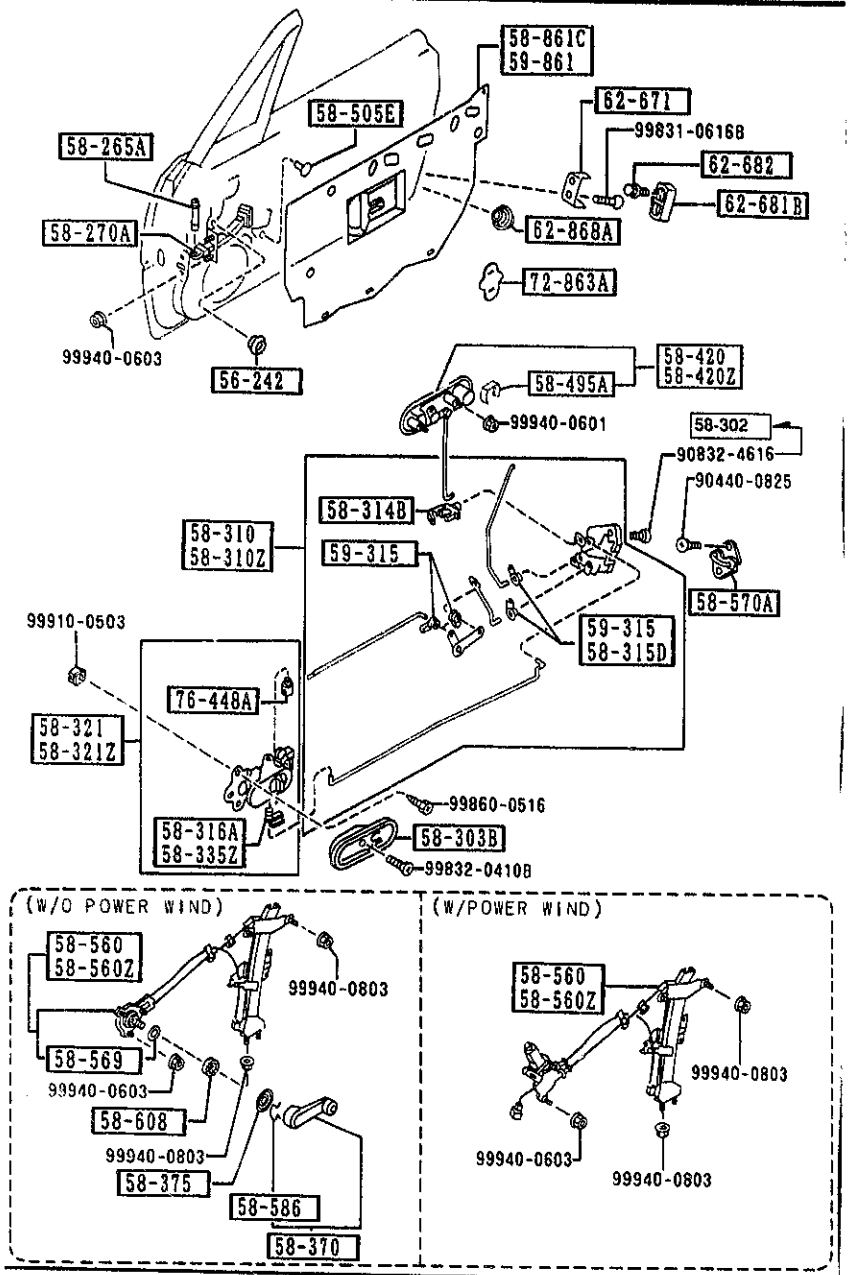

AUNA02

PART NO.	QTY	MODEL/RESTRICTION	MODEL/RESTRICTION	MODEL/RESTRICTION	FROM-TO
CONT'D					
NA01-59-560C	1	BASE, (W/O POWER WIND.)			0B14-
NA02-59-560C	1	PKG-OPT, V-SPECIAL, (W/POWER WIND.)			0B14-
58-569		GASKET,WINDOW REGULATOR			
B092-58-569	2	BASE, (W/O POWER WIND.)			
58-570A		STRIKER			
B001-58-361A	2				
58-586		RING,SNAP			
B001-58-585	2	BASE, (W/O POWER WIND.)			
58-608		PAD			
B092-58-863A	2	BASE, (W/O POWER WIND.)			
58-861C		SCREEN(R),FRONT DOOR			
NA01-58-861A	1	BASE, (W/O POWER WIND.)			
NA02-58-861A	1	PKG-OPT, V-SPECIAL, (W/POWER WIND.)			
59-315		CLIP			
G030-59-315	3	(FOR RIGHT)			
59-861		SCREEN(L),FRONT DOOR			
NA01-59-861A	1	BASE, (W/O POWER WIND.)			
NA02-59-861A	1	PKG-OPT, V-SPECIAL, (W/POWER WIND.)			
62-671		DOVETAIL,LIFT GATE			
S084-62-671	2				
62-681B		WEDGE,DOOR-FRONT			
NA01-62-681	2				
62-682		SCREW,WEDGE-LIFT GATE			
B216-62-682	4				

0B14 NA35**-218786

CAT. AUNA02-07

1993-12

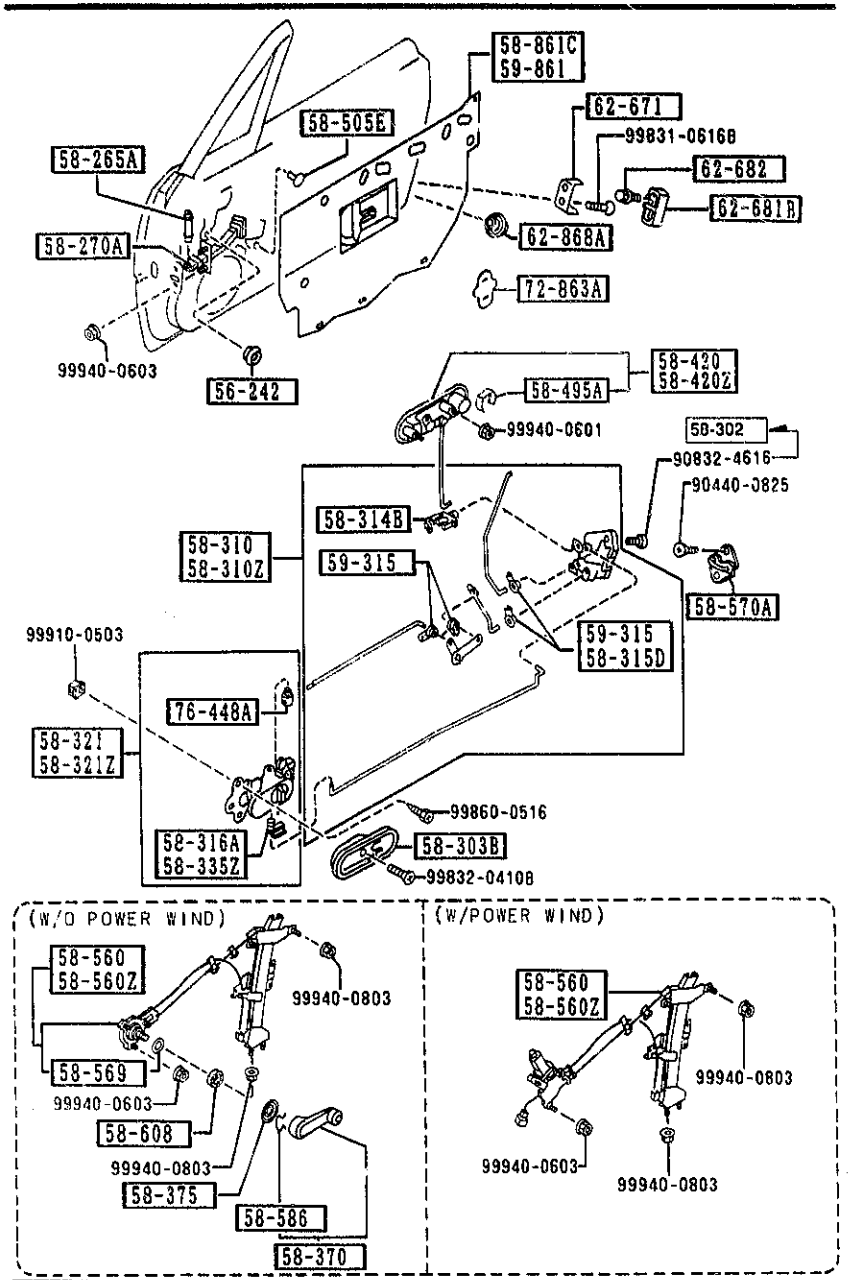

AUNA02

5830 -4 * FRONT DOOR MECHANISMS

PART NO.	QTY	MODEL/RESTRICTION	MODEL/RESTRICTION	MODEL/RESTRICTION	FROM-TO
62-868A B499-62-868	2	COVER,HOLE-LIFT GATE			
72-863A H260-72-864B	2	PAD			
76-448A G030-76-448	2	CLIP			

CAT. AUNA02-07

1993-12

5840 -1 FRONT DOOR TRIMS & RELATED PARTS

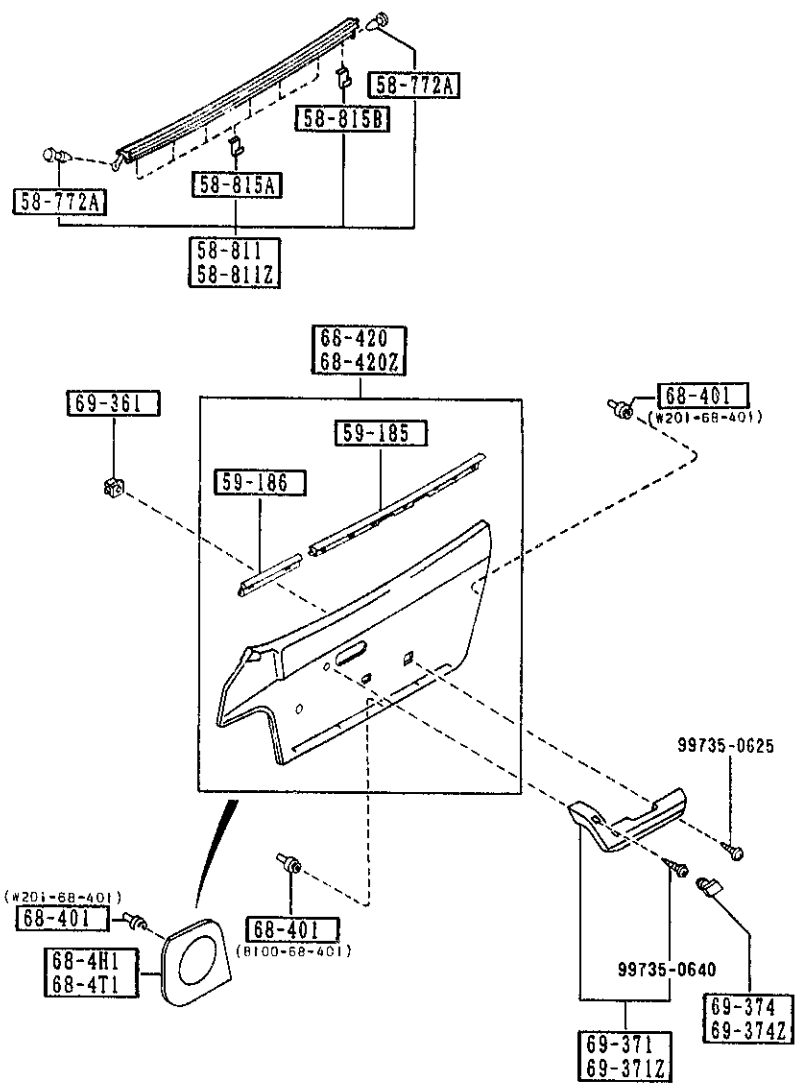

PART NO.	QTY	MODEL/RESTRICTION	MODEL/RESTRICTION	MODEL/RESTRICTION	FROM-TO
58-772A 1011-58-772	4	FASTENER			
58-811 NA01-58-810D	1	WEATHERSTRIP(R),OUT.			
58-811Z NA01-59-810D	1	WEATHERSTRIP(L),OUT.			
58-815A NA01-58-815	12	CLIP,WEAT IERSTRIP-OU TER			
58-815B B157-58-815	2	CLIP'A',WEATHERSTRIP -OUT			
59-185 NA01-58-821	2	WEATHERSTRIP NO.1			
59-186 NA02-58-821	2	WEATHERSTRIP NO.2			
68-4H1 NA01-68-4H0	1	GRILLE(R),SPEAKER			
00	INT-	NA0 BLACK			
88	INT-	NA1 TAN/BLACK			
68-4T1 NA01-68-4W0	1	GRILLE(L),SPEAKER			
00	INT-	NA0 BLACK			
88	INT-	NA1 TAN/BLACK			
68-401 B100-68-401	10	FASTENER,DOOR TRIM			
W201-68-401	12				
68-420 NA01-68-420B A (NA01-68-420C)	1	TRIM(R),DOOR			-1311
00	INT-	NA0 BLACK			
88	INT-	NA1 BLACK/TAN			

1311 NA35**-231857

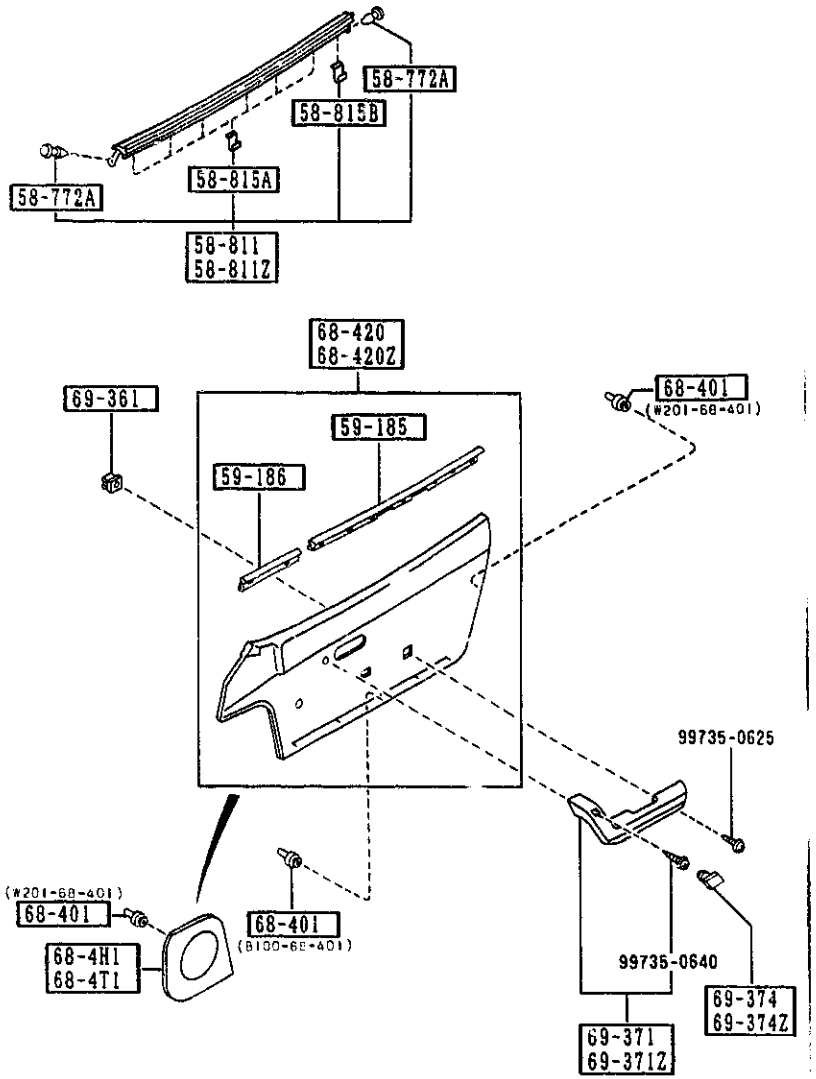

PART NO.	QTY	MODEL/RESTRICTION	MODEL/RESTRICTION	MODEL/RESTRICTION	FROM-TO
CONT'D					
NA02-68-420B A (NA02-68-420C)	1				-1311
00	INT-	NA0 BLACK			
88	INT-	NA1 BLACK/TAN			
NA01-68-420C	1	BASE, (W/O POWER WIND.)			1311-
00	INT-	NA0 BLACK			
88	INT-	NA1 BLACK/TAN			
NA02-68-420C	1	PKG-OPT, V-SPECIAL, (W/POWER WIND.)			1311-
00	INT-	NA0 BLACK			
88	INT-	NA1 BLACK/TAN			
+----------+ | 68-420Z | +----------+		TRIM(L),DOOR			
NA01-68-450B A (NA01-68-450C)	1				-1311
00	INT-	NA0 BLACK			
88	INT-	NA1 BLACK/TAN			
NA02-68-450B A (NA02-68-450C)	1				-1311
00	INT-	NA0 BLACK			
88	INT-	NA1 BLACK/TAN			
NA01-68-450C	1	BASE, (W/O POWER WIND.)			1311-
00	INT-	NA0 BLACK			
88	INT-	NA1 BLACK/TAN			
NA02-68-450C	1	PKG-OPT, V-SPECIAL, (W/POWER WIND.)			1311-
00	INT-	NA0 BLACK			
88	INT-	NA1 BLACK/TAN			
+----------+ | 69-361 | +----------+		GROMMET,SCREW			
B316-69-361	6				
+----------+ | 69-371 | +----------+		REST(R),ARM			
BF70-69-370C	1				
00	INT-	NA0 BLACK			
88	INT-	NA1 TAN			

1311 NA35**-231857

5840 -3 * FRONT DOOR TRIMS & RELATED PARTS

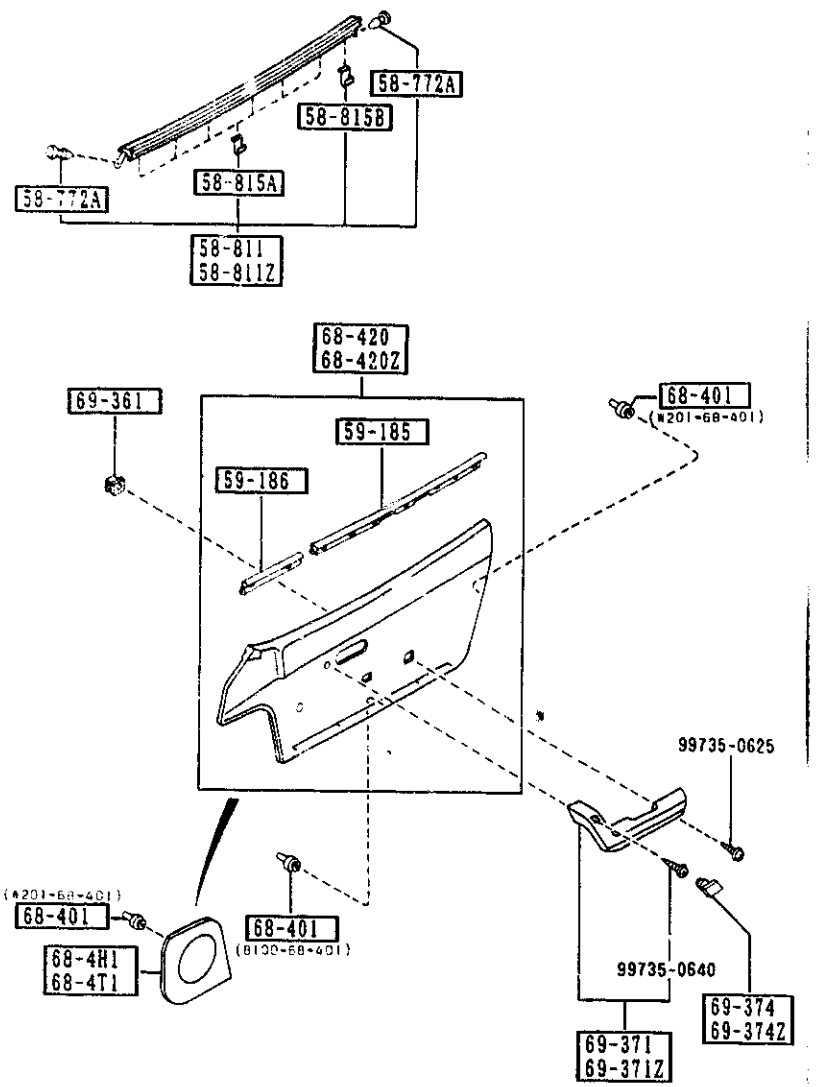

PART NO.	QTY	MODEL/RESTRICTION	MODEL/RESTRICTION	MODEL/RESTRICTION	FROM-10
69-371Z		REST(L),ARM			
BF70-69-390C	1				
00	INT-	NA0 BLACK			
88	INT-	NA1 TAN			
69-374		CAP(R),PULL HANDLE			
BF70-69-372	1				
00	INT-	NA0 BLACK			
88	INT-	NA1 TAN			
69-374Z		CAP(L),PULL HANDLE			
BF70-69-392	1				
00	INT-	NA0 BLACK			
88	INT-	NA1 TAN			

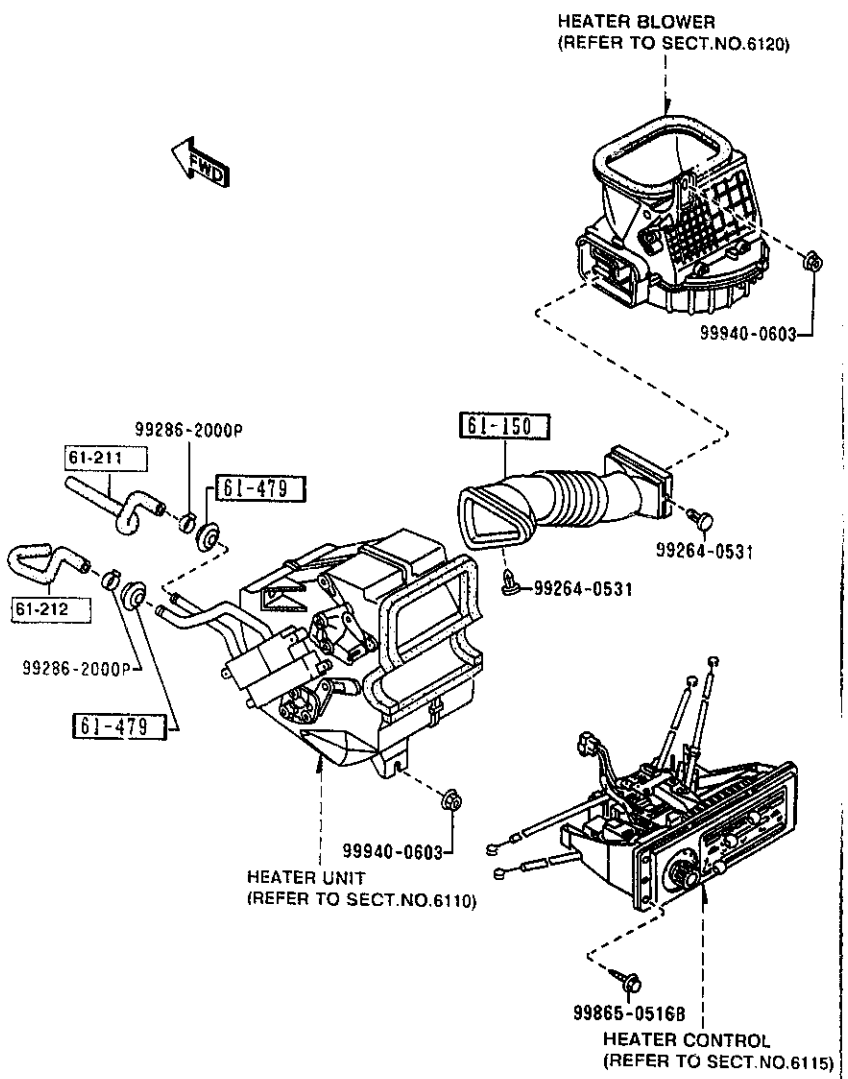

PART NO.	QTY	MODEL/RESTRICTION	MODEL/RESTRICTION	MODEL/RESTRICTION	FROM TO
61-150		DUCT,AIR			
NA01-61-150A	1				
61-211		HOSE NO.1,WATER			
NA01-61-211	1				
61-212		HOSE NO.2,WATER			
NA01-61-212A	1				-1801
N007-61-212	1				1801-
61-479		GROMMET			
8871-61-219A	2				

1801 NA35**-300014

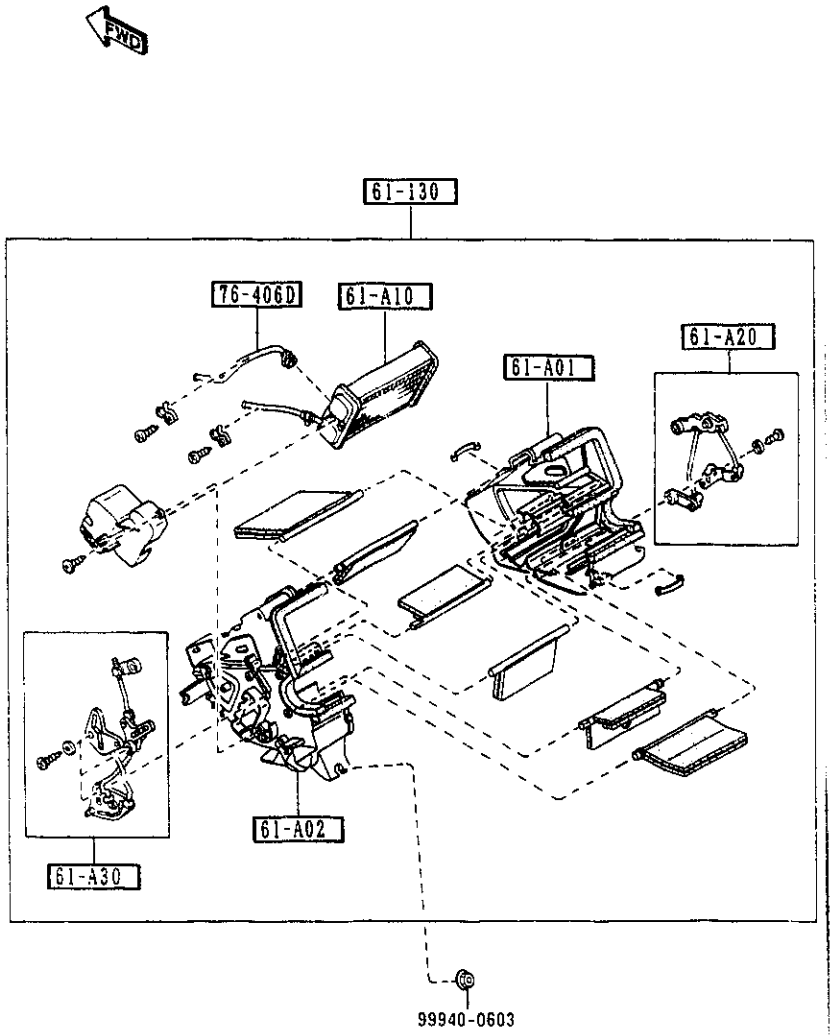

6110 -1 * HEATER UNIT COMPONENTS

PART NO.	QTY	MODEL/RESTRICTION	MODEL/RESTRICTION	MODEL/RESTRICTION	FROM-TO
61-A01		CASE'A',HEATER UNIT			
NA01-61-A01	1				
61-A02		CASE'B',HEATER UNIT			
NA01-61-A02	1				
61-A10		CORE,HEATER UNIT			
NA01-61-A10	1				
61-A20		LINK SET,TEMP			
NA01-61-A20	1				
61-A30		LINK SET,MODE			
NA01-61-A30	1				
61-130		HEATER UNIT			
NA01-61-130A	1				
76-406D		PIPE,HEATER UNIT			
NA01-61-A15	1				

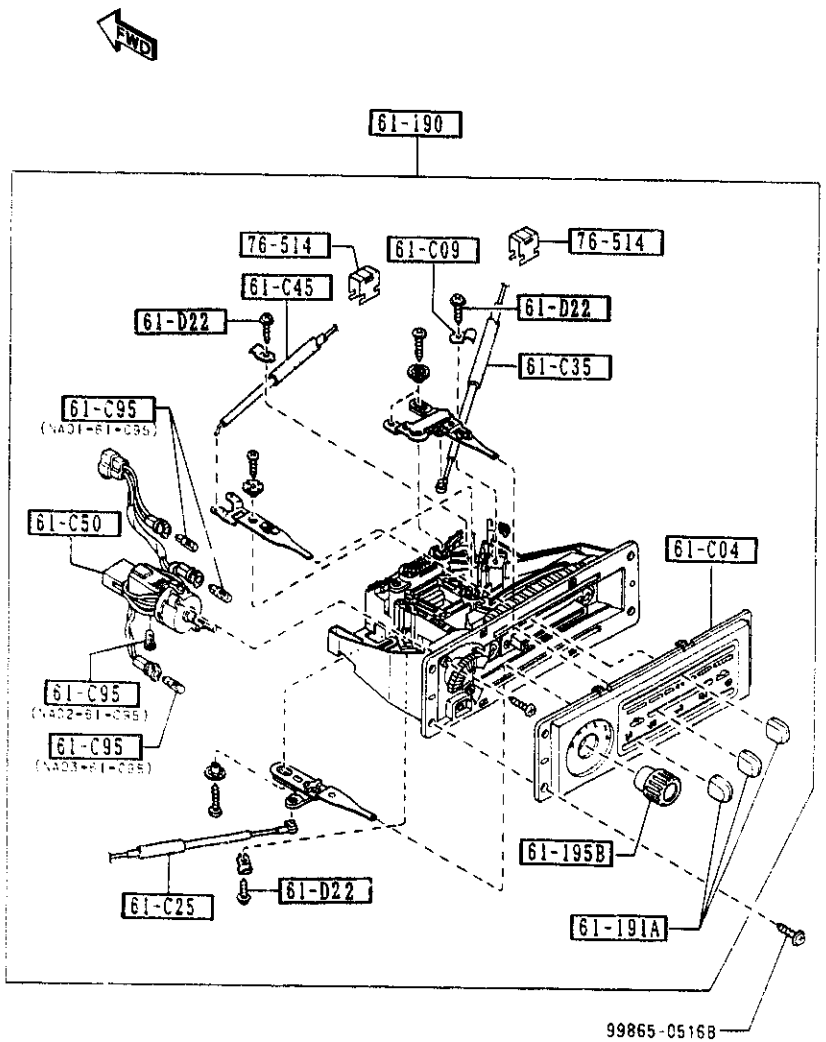

AUNA02

PART NO.	QTY	MODEL/RESTRICTION	MODEL/RESTRICTION	MODEL/RESTRICTION	FROM-TO
61-C04		PANEL,PLATE-MODE CONTROL			
NA01-61-C04	1	BASE, (W/O DETACHABLE TOP)			-1826
NA02-61-C04A	1	OPTION, (W/DETACHABLE TOP-B. COLOR,)			1801-
NA01-61-C04A	1	BASE, (W/O DETACHABLE TOP)			1826-
61-C09		CLIP,HEATER CONTROL			
H260-61-C09	1				
61-C25		WIRE,TEMP. CONTROL			
NA01-61-C25	1				
61-C35		WIRE,MODE CONTROL			
NA01-61-C35	1				
61-C45		WIRE,RECYCLE & FRESH			
NA01-61-C45	1				
61-C50		SWITCH,FAN-HEATER CONTROL			
NA01-61-C50	1				
61-C95		BULB,MODE CONTROL			
NA01-61-C95	2				
NA02-61-C95	1				
NA03-61-C95	1				
61-D22		SCREW,RR HEATER UNIT			
NA01-61-D22	3				
61-190		CONTROL,HEATER			
NA01-61-190A	1	BASE, (W/O DETACHABLE TOP)			-1826
NA02-61-190A	1	OPTION, (W/DETACHABLE TOP-B. COLOR,)			1801-
NA01-61-190B	1	BASE, (W/O DETACHABLE TOP)			1826-

1801 NA35**-300014
1826 NA35**-301452

CAT. AUNA02-07

1993-12

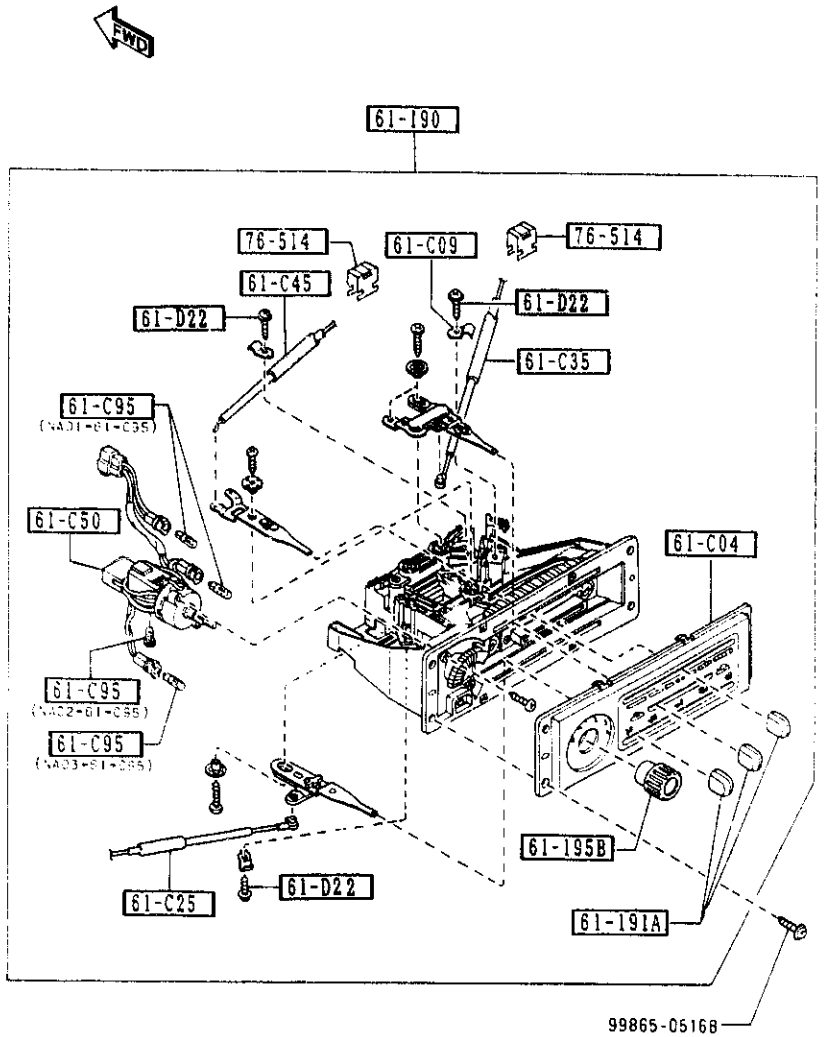

PART NO.	QTY	MODEL/RESTRICTION	MODEL/RESTRICTION	MODEL/RESTRICTION	FROM-TO
61-191A		KNOB NO.1			
NA01-61-191	3				
61-195B		KNOB,FAN SWITCH			
NA01-61-195	1				
76-514		CLIP			
B001-76-526	2				

6120 -1 * HEATER BLOWER COMPONENTS

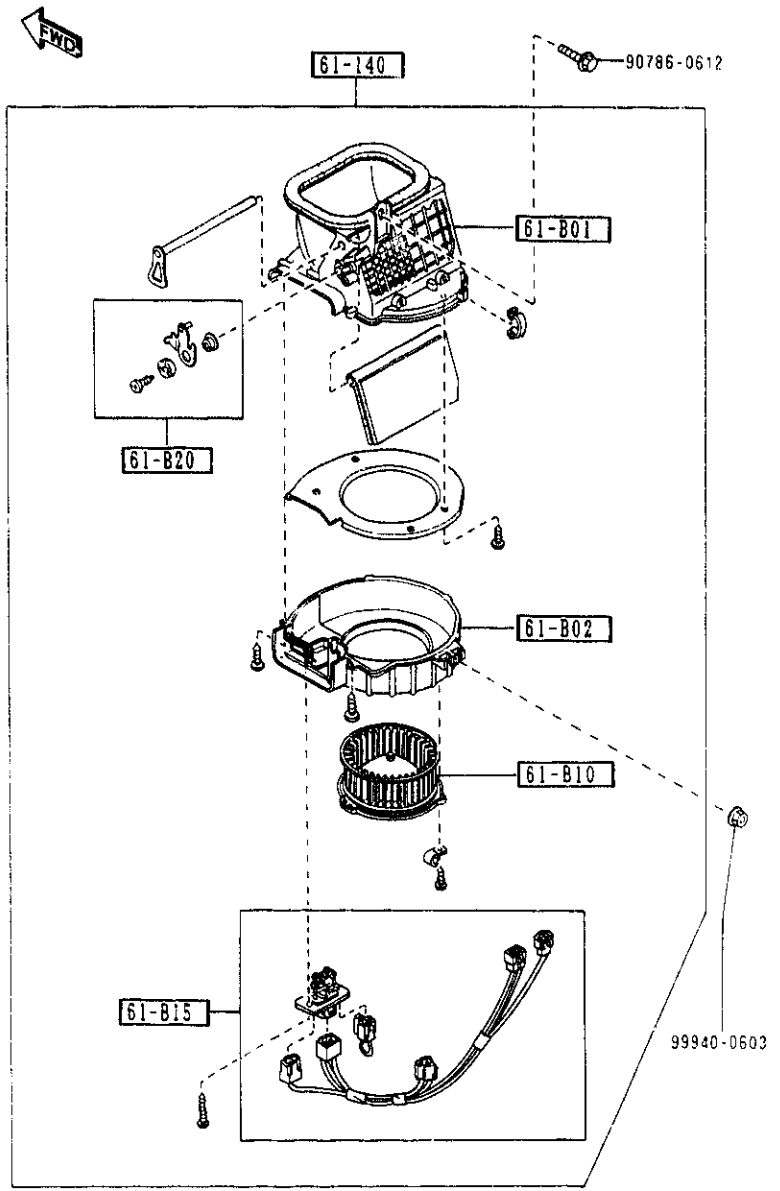

PART NO.	QTY	MODEL/RESTRICTION	MODEL/RESTRICTION	MODEL/RESTRICTION	FROM 10
61-B01		CASE'A',BLOWER UNIT			
NA01-61-B01	1				
61-B02		CASE'B',BLOWER UNIT			
NA01-61-B02	1				
61-B10		MOTOR,FAN-BLOWER UNIT			
NA01-61-B10	1				
61-B15		RESISTOR,BLOWER UNIT			
NA01-61-B15	1				
61-B20		LINK,RECYCLE & FRESH			
NA01-61-B20	1				
61-140		BLOWER UNIT			
NA01-61-140A	1				

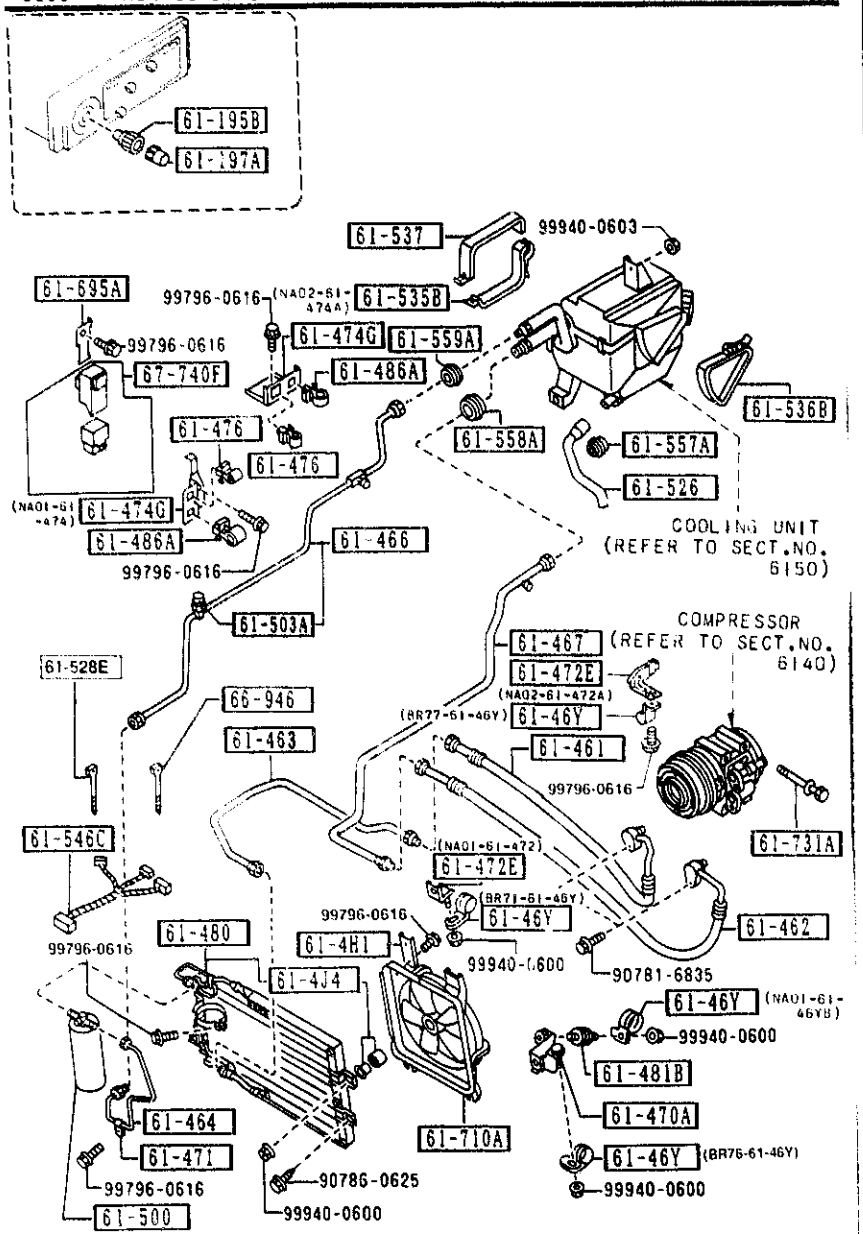

PART NO.	QTY	MODEL/RESTRICTION	MODEL/RESTRICTION	MODEL/RESTRICTION	FROM TO
61-195B NA01-61-193	1	KNOB,FAN SWITCH			
61-197A NA01-61-197	1	KNOB,AIR CON.			
61-4H1 NA01-61-4H1	1	BRACKET,HOSE (A)			
61-4J4 NA01-61-4J4	4	RUBBER,INS.-CONDR (A)			
61-46Y BR71-61-46Y	1	CLIP,PIPE (A)			
BR76-61-46Y	1	(A)			
BR77-61-46Y	1	(A)			
NA01-61-46YB	1	(A)			
61-461 NA01-61-461B	1	HOSE,FLEXIBLE-HIGH (A)			
61-462 NA01-61-462C	1	HOSE,FLEXIBLE-LOW (A)			
61-463 NA02-61-466C	1	PIPE NO.1,COOLER (A)			
61-464 NA01-61-466	1	PIPE NO.2,COOLER (A)			
61-466 NA01-61-467C AN(NA01-61-46X)	1	PIPE NO.4,COOLER (A)			-0C17
NA01-61-46X	1	(A)			0C17-

0C17 NA35**-222506

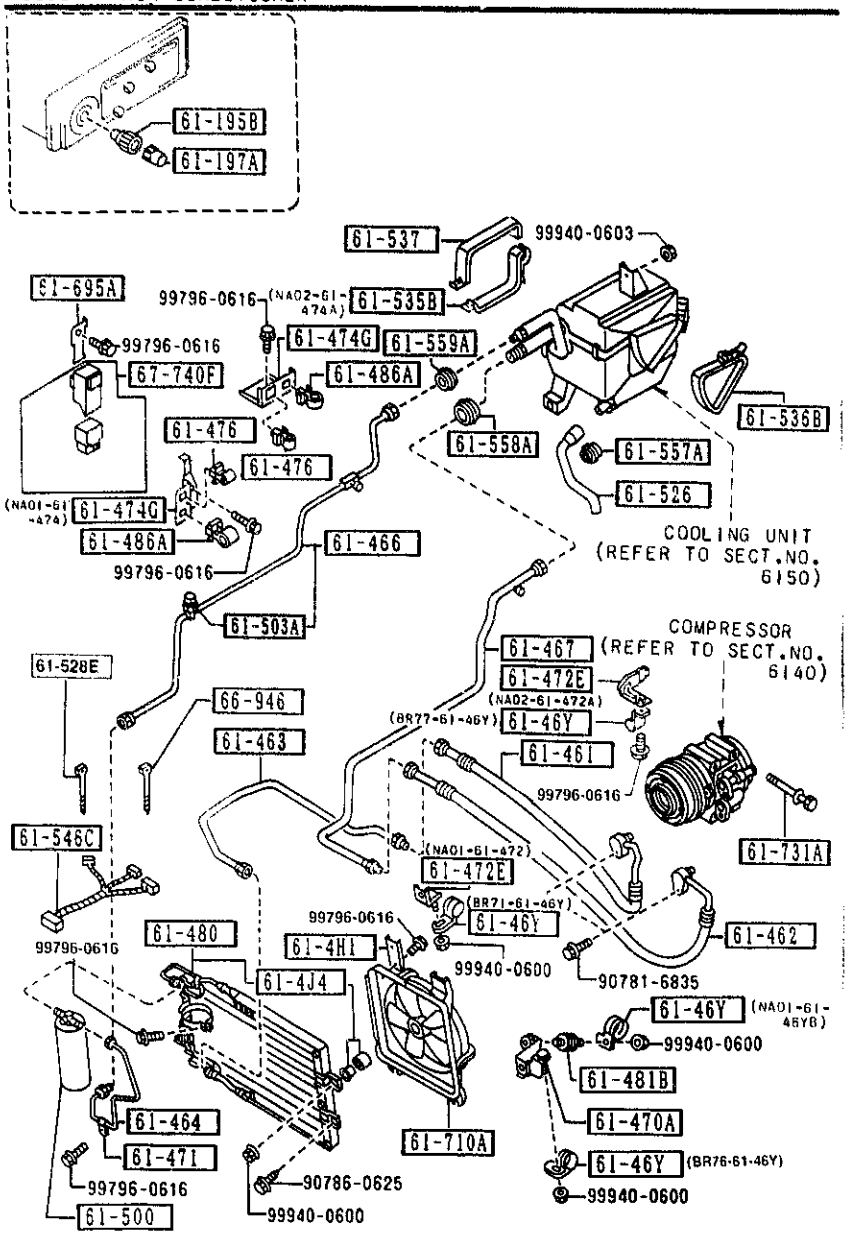

PART NO.	QTY	MODEL/RESTRICTION	MODEL/RESTRICTION	MODEL/RESTRICTION	FROM-TO
61-467		PIPE NO.5,COOLER			
NA01-61-468A	1	(A)			
61-470A		BRACKET,HOSE			
*NA02-61-471A	1	(A)			
61-471		CLIP,PIPE			
BF67-61-471	1	(A)			
61-472E		BRACKET,CLAMP			
NA01-61-472	1	(A)			
NA02-61-472A	1	(A)			
61-474G		BRACKET,PIPE			
NA01-61-474	1	(A)			
NA02-61-474A	1	(A)			
61-476		CLIP			
NA02-61-476	2	(A)			
61-480		CONDENSER			
NA01-61-480	1	(A)			
61-481B		RUBBER,INSULATOR			
NA01-61-487	1				
61-486A		CLIP			
UB39-61-486A	2				
61-500		TANK,LIQUID			
NA01-61-500	1	(A)			
61-503A		SWITCH,PRESS-COOLER PIPE			
NA01-61-503	1	(A)			

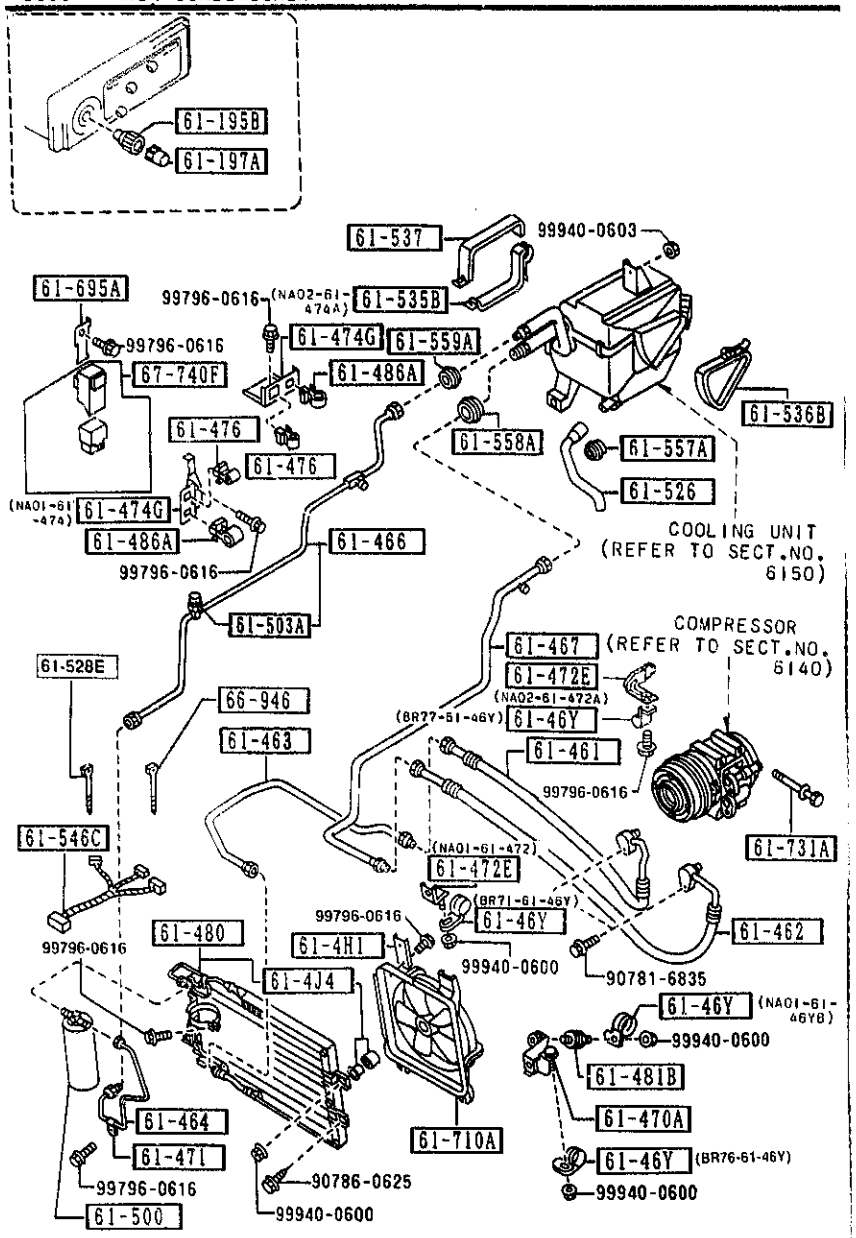

PART NO.	QTY	MODEL/RESTRICTION	MODEL/RESTRICTION	MODEL/RESTRICTION	FROM-TO
61-526		HOSE,DRAIN			
NA01-61-526	1	(A)			
61-528E		BAND			
NA01-61-435	3	(G)			~0C10
NA01-61-435	2	(G)			0C10~
61-535B		PLATE NO.1,SEAL			
NA01-61-52YA	1	(A)			
61-536B		PLATE NO.2,SEAL			
NA01-61-52Z	1	(A)			
61-537		PLATE NO.3,SEAL			
NA01-61-529	1	(A)			
61-546C		HARNESS,WIRE			
NA01-61-546B	1	(A)			
61-557A		GROMMET			
FB04-61-557	1	(A)			
61-558A		GROMMET			
BF67-61-558	1	(A)			
61-559A		GROMMET			
BF67-61-559	1	(A)			
61-695A		BRACKET,RELAY			
NA01-61-695	1	(A)			
61-710A		FAN,CONDENSER			
NA01-61-710	1	(A)			

0C10 NA35**-221880

6130 AIR CONDITIONER

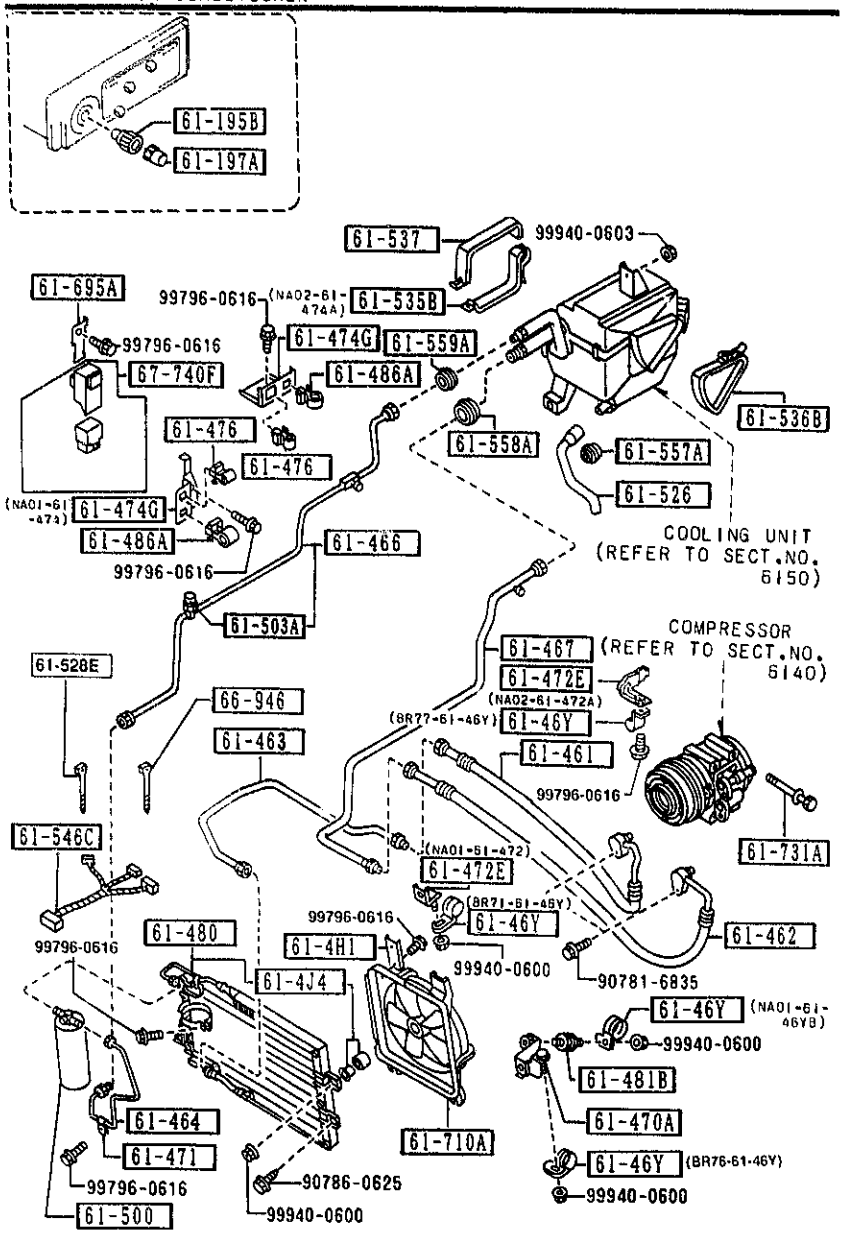

PART NO.	QTY	MODEL/RESTRICTION	MODEL/RESTRICTION	MODEL/RESTRICTION	FROM-TO
61-731A B111-61-731	4	BOLT,AIR CON.			
66-946 NA02-61-435	1	BAND (A)			
67-740F B462-67-740	1	CONTROL,COOLANT FAN			

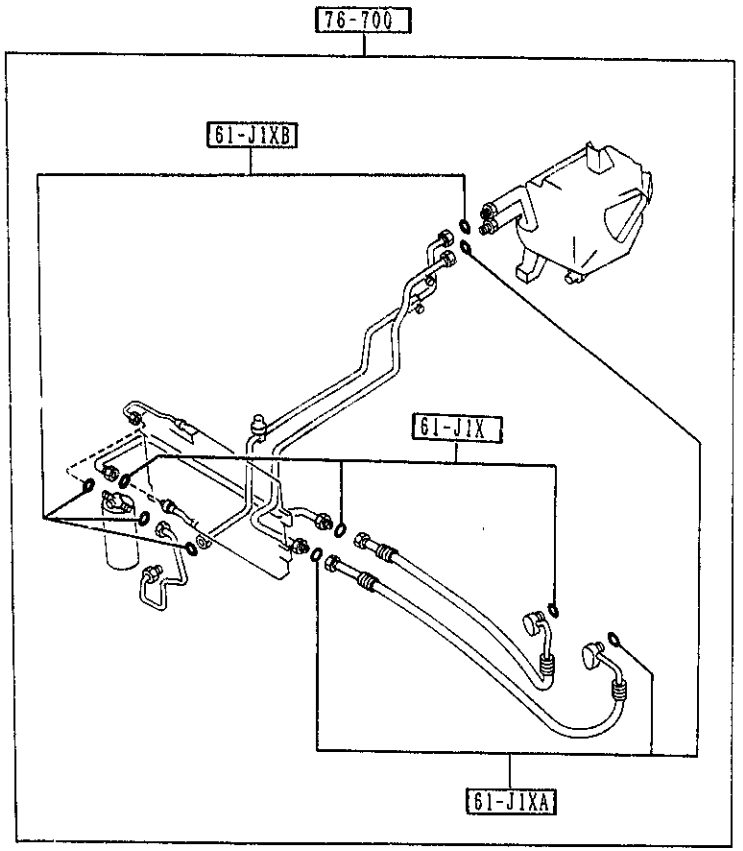

6135 -1 * O RING SET,PIPING

PART NO.	QTY	MODEL/RESTRICTION	MODEL/RESTRICTION	MODEL/RESTRICTION	FROM-TO
61-J1X		RING,'O'-NO.1			
GJY1-61-J1X	3	(A)			
61-J1XA		RING,'O'-NO.2			
GJY2-61-J1X	3	(A)			
61-J1XB		RING,'O'-NO.3			
GJY3-61-J1X	4	(A)			
76-700		RING SET,'O'-AIR CON			
NA01-76-700	1	(A)			

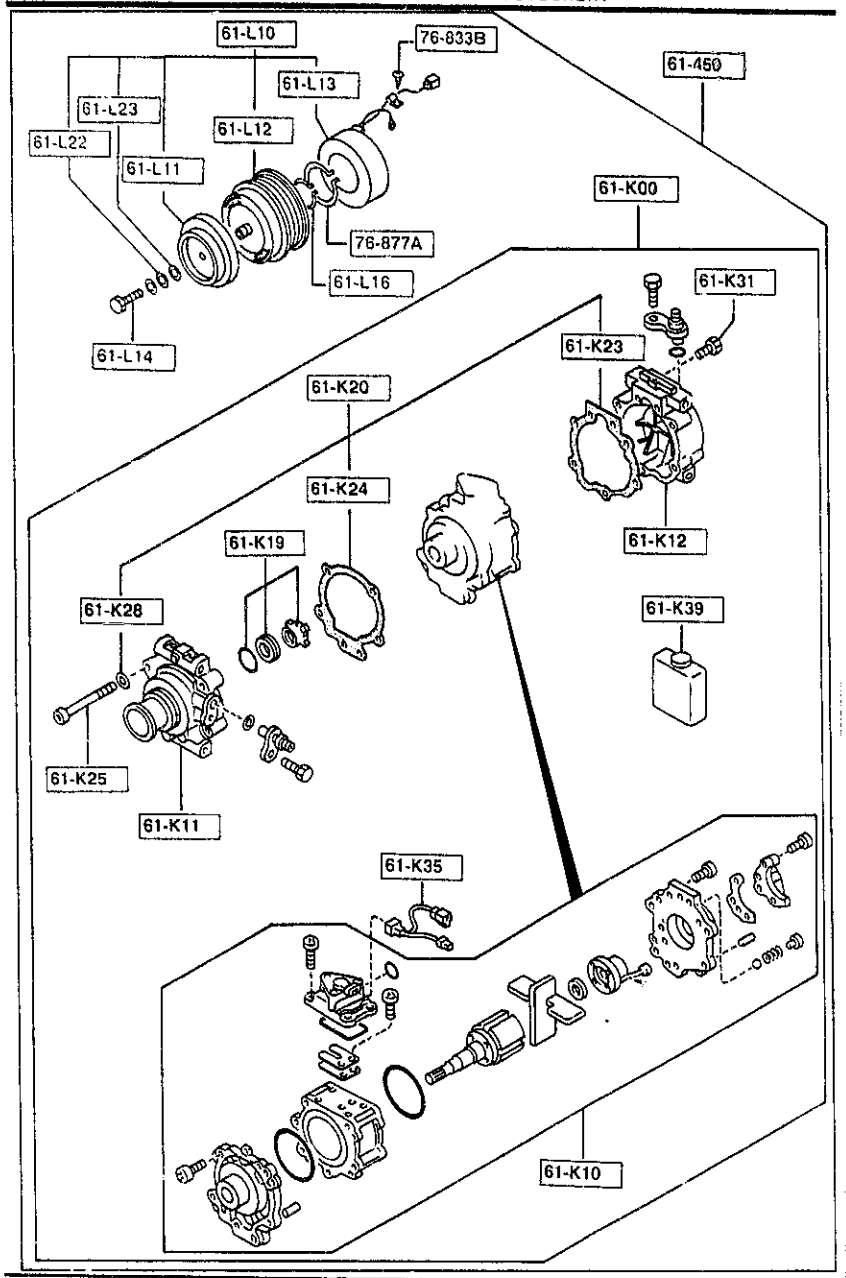

AUNA02

PART NO.	QTY	MODEL/RESTRICTION	MODEL/RESTRICTION	MODEL/RESTRICTION	FROM-TO
61-K00		COMPRESSOR,AIR CON.			
NA02-61-K00	1	(A)			
61-K10		SHAFT,CYL -COMPRESSOR			
NA02-61-K10	1	(A)			
61-K11		HEAD,CYL.-COMPRESSOR			
NA02-61-K11	1	(A)			
61-K12		HEAD,CYL.-COMPRESSOR			
NA02-61-K12	1	(A)			
61-K19		SEAL,SHAFT-COMPR.			
F065-61-K19	1				
61-K20		GASKET KIT,COMPRESSOR			
NA02-61-K2X	1	(A)			
61-K23		PLUG,COMPRESSOR			
NA02-61-K23	1	(A)			
61-K24		GASKET,COMPRESSOR			
NA02-61-K24	1	(A)			
61-K25		BOLT,COMPRESSOR-AIR CON.			
F065-61-K25	5				
61-K28		WASHER,COMPRESSOR			
NA02-61-K28	5	(A)			
61-K31		BOLT,COMPRESSOR			
F065-61-K31	2				
61-K35		HARNESS,COMPRESSOR			
NA02-61-K35	1	(A)			

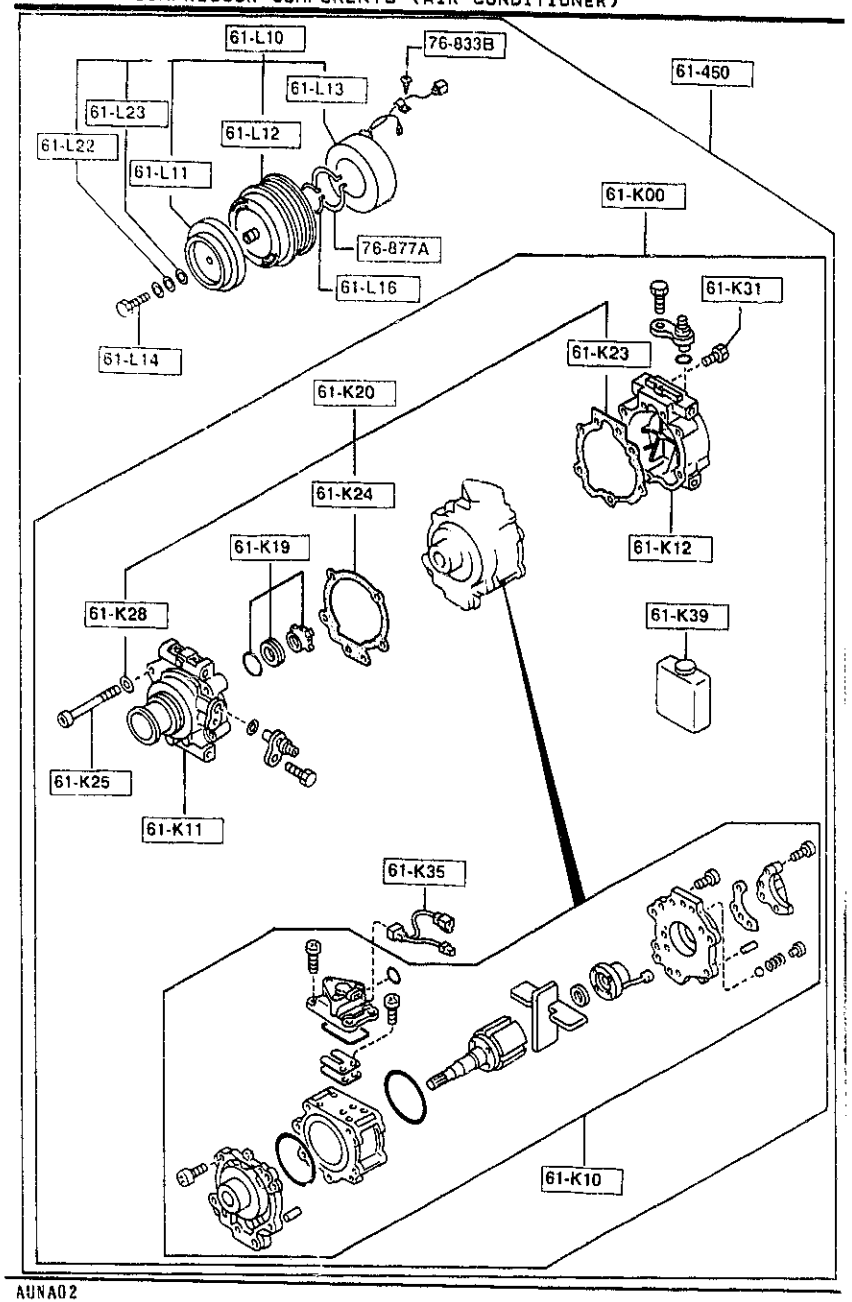

AUNA02

PART NO.	QTY	MODEL/RESTRICTION	MODEL/RESTRICTION	MODEL/RESTRICTION	FROM-TO
61-K39		OIL,COMPRESSOR			
NA02-61-K39	1	(A)			
61-L10		CLUTCH,MAGNET			
NA02-61-L10	1	(A)			
61-L11		ARMATURE,MAGNETIC CLUTCH			
F065-61-L11	1				
61-L12		PULLEY,MAGNET CLUTCH			
NA02-61-L12	1	(A)			
61-L13		COIL,FIELD-MAGNET CLUTCH			
F065-61-L13	1				
61-L14		BOLT,MAGNET CLUTCH			
F065-61-L14	1				
61-L16		RING,SNAP-MAGNET CLUTCH			
F065-61-L16	1				
61-L22		WASHER,MAGNET CLUTCH			
*KA10-61-L22	1				
61-L23		WASHER,MAGNET CLUTCH			
*KA10-61-L23	1				
61-450		COMPRESSOR			
NA02-61-450A	1	(A)			
76-833B		WASHER			
B001-76-734	1				
76-877A		RING,SNAP			
B001-76-725	1				

6150 COOLING UNIT (AIR CONDITIONER)

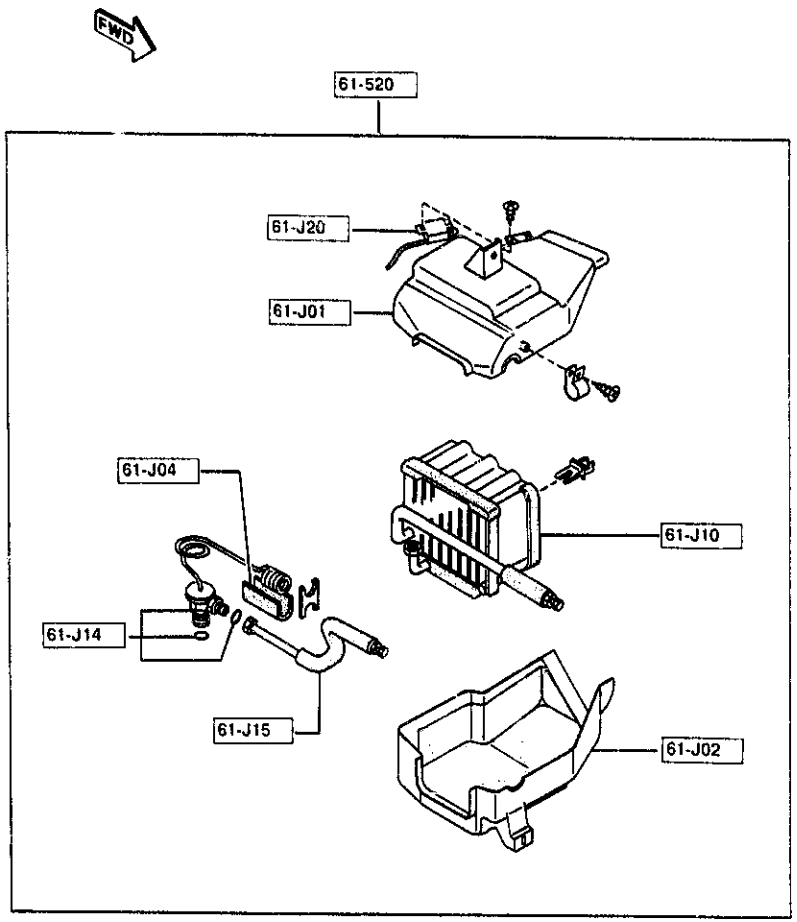

PART NO.	QTY	MODEL/RESTRICTION	MODEL/RESTRICTION	MODEL/RESTRICTION	FROM-TO
61-J01		CASE'A',COOLING UNIT			
NA01-61-J01	1	(A)			
61-J02		CASE'B',COOLING UNIT			
NA01-61-J02	1	(A)			
61-J04		SEAL,COOLING UNIT			
NA01-61-J04	1	(A)			
61-J10		EVAPORATOR			
NA01-61-J10	1	(A)			
61-J14		VALVE,EXPANSION			
NA01-61-J14	1	(A)			
61-J15		PIPE,COOLING UNIT			
NA01-61-J15	1	(A)			
61-J20		THERMOSTAT,COOLING UNIT			
NA01-61-J20	1	(A)			
61-520		UNIT,COOLING			
NA01-61-520B	1	(A)			

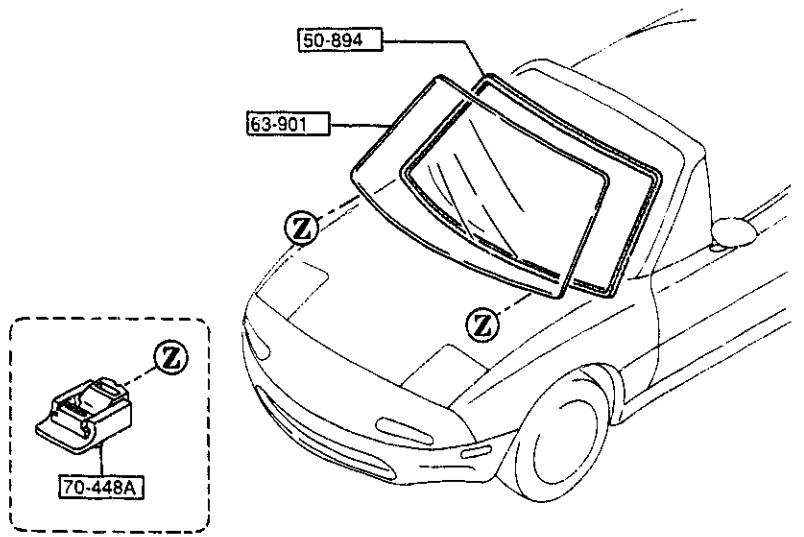

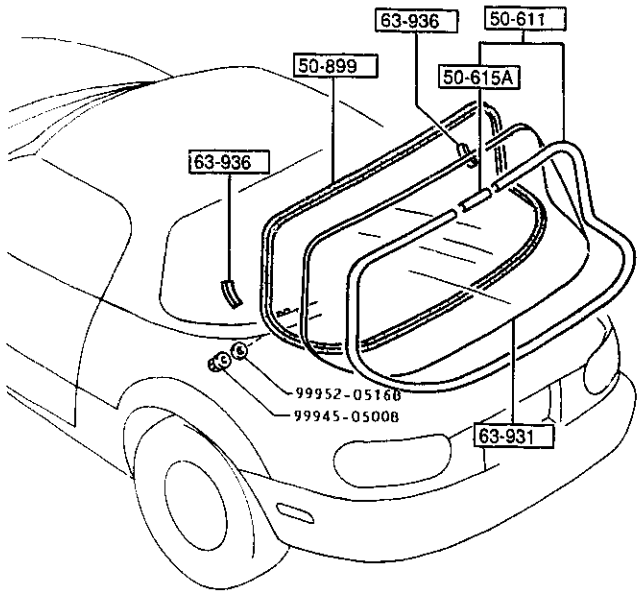

AUNA02

6300 -1 * WINDOW GLASSES

PART NO.	QTY	MODEL/RESTRICTION	MODEL/RESTRICTION	MODEL/RESTRICTION	FROM-TO
50-611		MOULD,RR.WINDOW			
NAY1-63-930	1	OPTION, (W/DETACHABLE TOP)			
50-615A		JOINT,BACK WINDOW MOULD			
NA01-63-934	1	OPTION, (W/DETACHABLE TOP)			
50-894		DAM,FRONT-WIND.			
NA01-50-894 A (NA01-50-894A)	1				-0A01
NA01-50-894A	1				0A01-
50-899		DAM,REAR-WIND.			
NA01-63-895	1	OPTION, (W/DETACHABLE TOP)			
63-901		GLASS,WINDSHIELD			
NA01-63-901	1				
63-931		GLASS,BACK WINDOW			
NA01-63-931C	1	OPTION, (W/DETACHABLE TOP)			-1801
N007-63-931	1	OPTION, (W/DETACHABLE TOP)			1801-
63-936		PROTR,BACK WINDOW-UPPER			
NA01-63-936A	2	OPTION, (W/DETACHABLE TOP)			
70-448A		SPACER'B'			
GJ21-50-891	2				

0A01 NA35**-213219
1801 NA35**-300014

CAT. AUNA02-07

1993-12

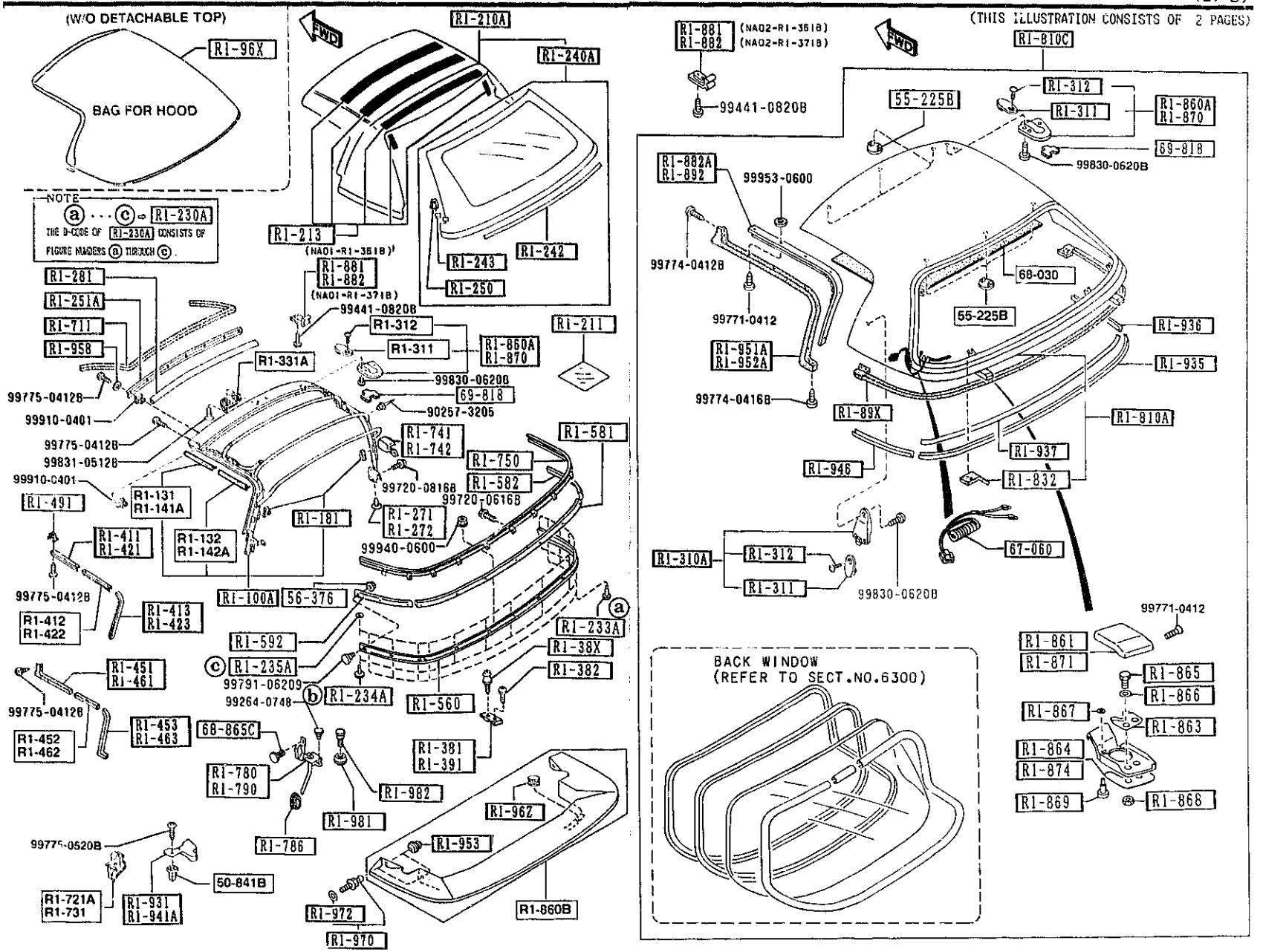

AUNA02 (CONT'D) AUNA02

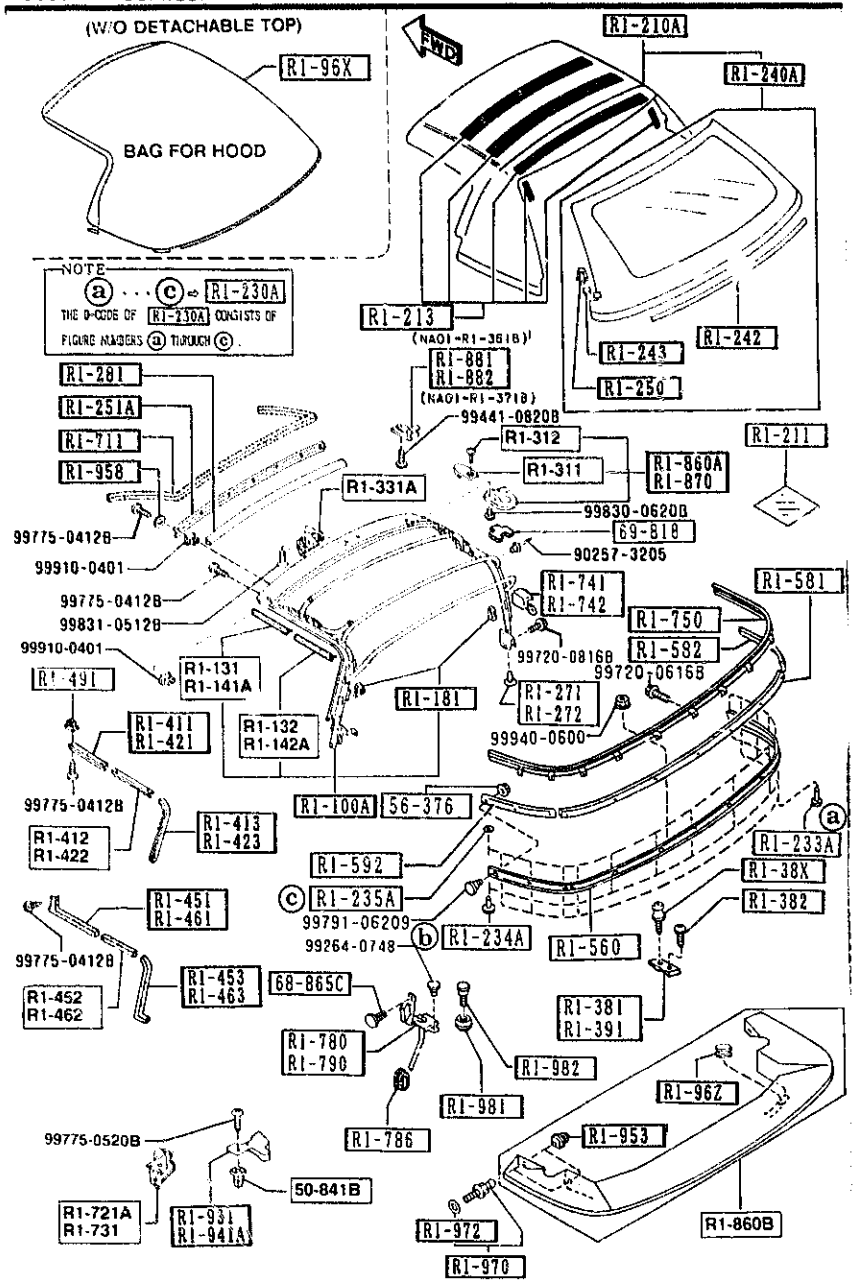

AUNA02 (CONT'D)

6330 -1 SUNROOF

PART NO.	QTY	MODEL/RESTRICTION	MODEL/RESTRICTION	MODEL/RESTRICTION	FROM-TO
R1-100A		LINK,SOFT TOP			
NA01-R1-100D AN(NA01-R1-100E)	1				-1201
NA01-R1-100E	1				1201-
R1-131		PROTECTOR'A'(R),LINK			
NA01-R1-131	1				1201-
R1-132		PROTECTOR'B'(R),LINK			
NA01-R1-132	1				1201-
R1-141A		PROTECTOR'A'(L),LINK			
NA01-R1-141	1				1201-
R1-142A		PROTECTOR'B'(L),LINK			
NA01-R1-142	1				1201-
R1-181		STOPPER,LINK-HOOD			
NA01-R1-181	2				
R1-210A		FABRIC,TOP-SOFT TOP			
NA01-R1-210G AN(NA01-R1-210H)	1				-2501
NA02-R1-210 A (NA02-R1-210A)	1				1801-1C01
NA02-R1-210A AN(NA02-R1-210B)	1				1C01-2501
NA01-R1-210H	1	(BLACK)			2501-
NA02-R1-210B	1	(TAN)			2501-
R1-211		CLOTH,REPAIR-TOP			
NAY1-R1-211	1	(BLACK)			
NAY2-R1-211	1	(TAN)			1801-
R1-213		CLOTH'C',TOP			
*NA02-R1-213	1	(TAN)			2401-
R1-230A		FASTENER SET,TOP CLOTH			
*NA01-R1-230	1				2401-
R1-233A		FASTENER,RAIN RAIL-SIDE			

1201 NA35**-228219
1801 NA35**-300014
1C01 NA35**-309801
2401 NA35**-321905
2501 NA35**-326361

CAT. AUNA02-07 1993-12

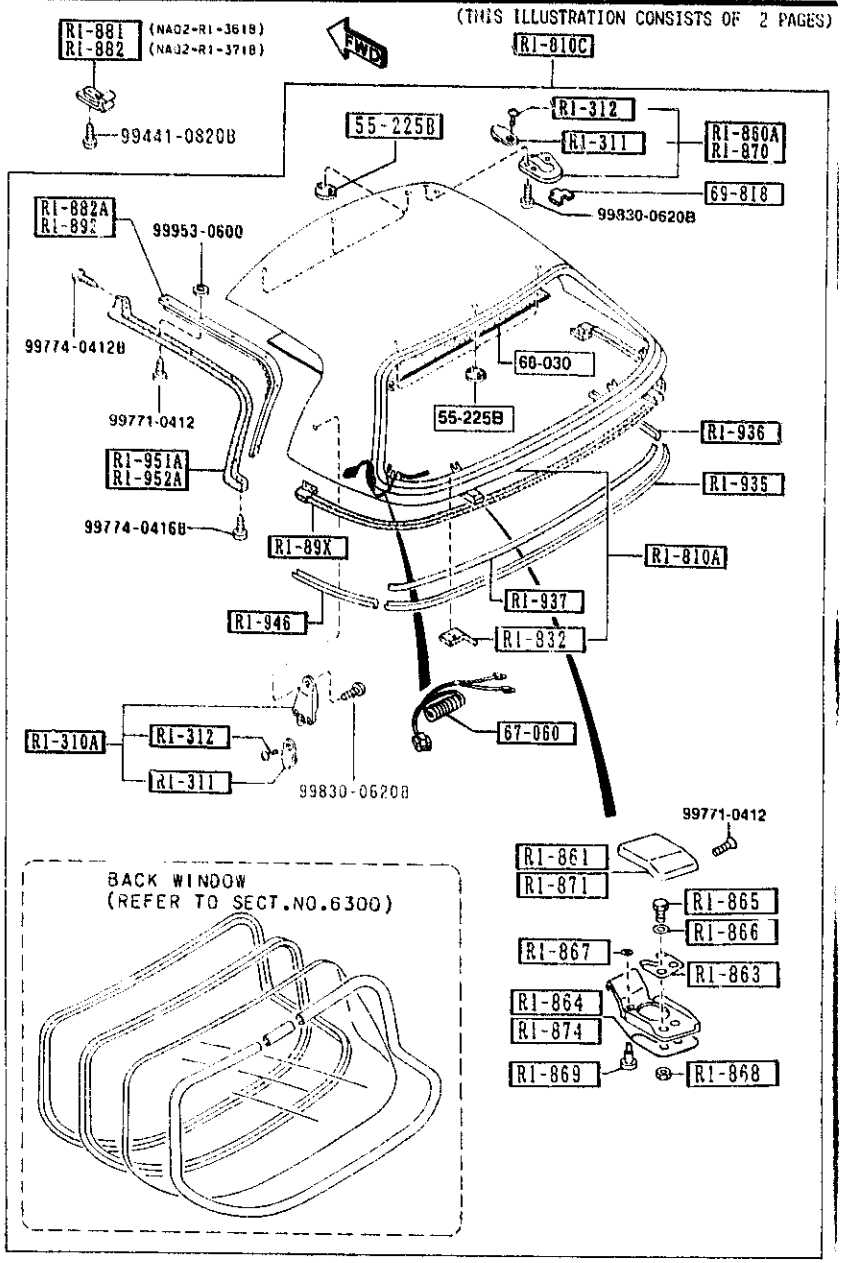

AUNA02

PART NO.	QTY	MODEL/RESTRICTION	MODEL/RESTRICTION	MODEL/RESTRICTION	FROM-TO
CONT'D					
*NA01-R1-233	8				2401-
R1-234A		FASTENER,RAIN RAIL-REAR			
*NA01-R1-234	7				2401-
R1-235A		WASHER,FASTENER-RAIN RAIL			
*NA01-R1-235	15				2401-
R1-240A		WINDOW,BACK-D. TOP			
NAY1-R1-240C		BLACK			
A (NAY1-R1-240D)	1				-1701
NAY1-R1-240D		BLACK			
AN(NAY1-R1-240E)	1				1701-2501
NAY2-R1-240		TAN			
A (NAY2-R1-240A)	1				1801-1C01
NAY2-R1-240A		TAN			
AN(NAY2-R1-240B)	1				1C01-2501
NAY1-R1-240E	1	BLACK			2501-
NAY2-R1-240B	1	TAN			2501-
R1-242		TAPE,SEAL-RAIN RAIL			
NAY1-R1-242	2				
R1-243		STOPPER,ZIPPER-BACK WINDOW			
NAY1-R1-243	2				
R1-250		HEAD,ZIPPER-BACK WINDOW			
NA01-R1-250A					
AN(NA01-R1-250B)	1				-2501
NA01-R1-250B	1				2501-
R1-251A		PLATE(FRT),SET-ROOF PANEL			
NA01-R1-291	1				
R1-271		CLIP(R),FORM PLATE			
NA01-R1-271	1				
R1-272		CLIP(L),FORM PLATE			
NA01-R1-272	1				

1701 NA35**-235561
1801 NA35**-300014
1C01 NA35*-309801
2401 NA35**-321905
2501 NA35**-326361

CAT. AUNA02-07 1993-12

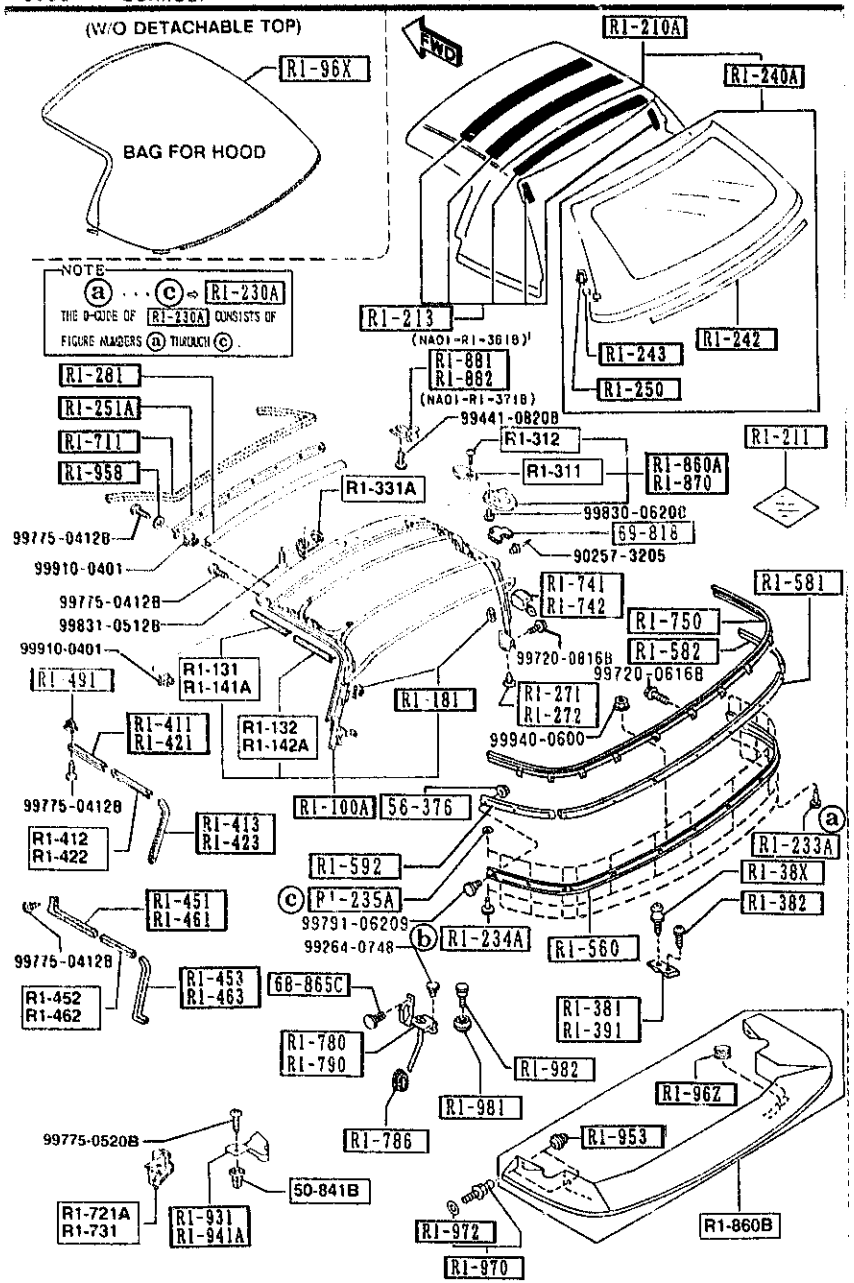

AUNA02 (CONT'D)

6330 -3 SUNROOF

PART NO.	QTY	MODEL/RESTRICTION	MODEL/RESTRICTION	MODEL/RESTRICTION	FROM-TO
R1-281		WELT,SEAMING-SOFT TOP			
NA01-R1-281	1				
R1-310A		LOCK,DETACHABLE TOP			
NA02-R1-310B	2	OPTION, (W/DETACHABLE TOP)			
R1-311		CAP,TOP LOCK			
NA01-R1-311	2	BASE, (W/O DETACHABLE TOP)			1201-
NA01-R1-311	6	OPTION, (W/DETACHABLE TOP)			1201-
R1-312		SCREW,TOP LOCK			
NA01-R1-312	2	BASE, (W/O DETACHABLE TOP)			1201-
NA01-R1-312	6	OPTION, (W/DETACHABLE TOP)			1201-
R1-331A		HANDLE,SOFT TOP			
NA01-R1-331	1				
R1-38X		HOOK,SOFT TOP-REAR DECK			
NA01-R1-38XB	2				
R1-381		PLATE(R),HOOK-REAR DECK			
NA01-R1-381B	1				
R1-382		SCREW,HOOK-REAR DECK			
NA01-R1-382A	2				
R1-391		PLATE(L),HOOK-REAR DECK			
NA01-R1-391B	1				
R1-411		RETAINER'A'(R),WTHSTP			
NA01-R1-461	1				
R1-412		RETAINER'B'(R),WTHSTP			
NA01-R1-462	1				
R1-413		RETAINER'C'(R),WTHSTP			

1201 NA35**-228219

CAT. AUNA02-07 1993-12

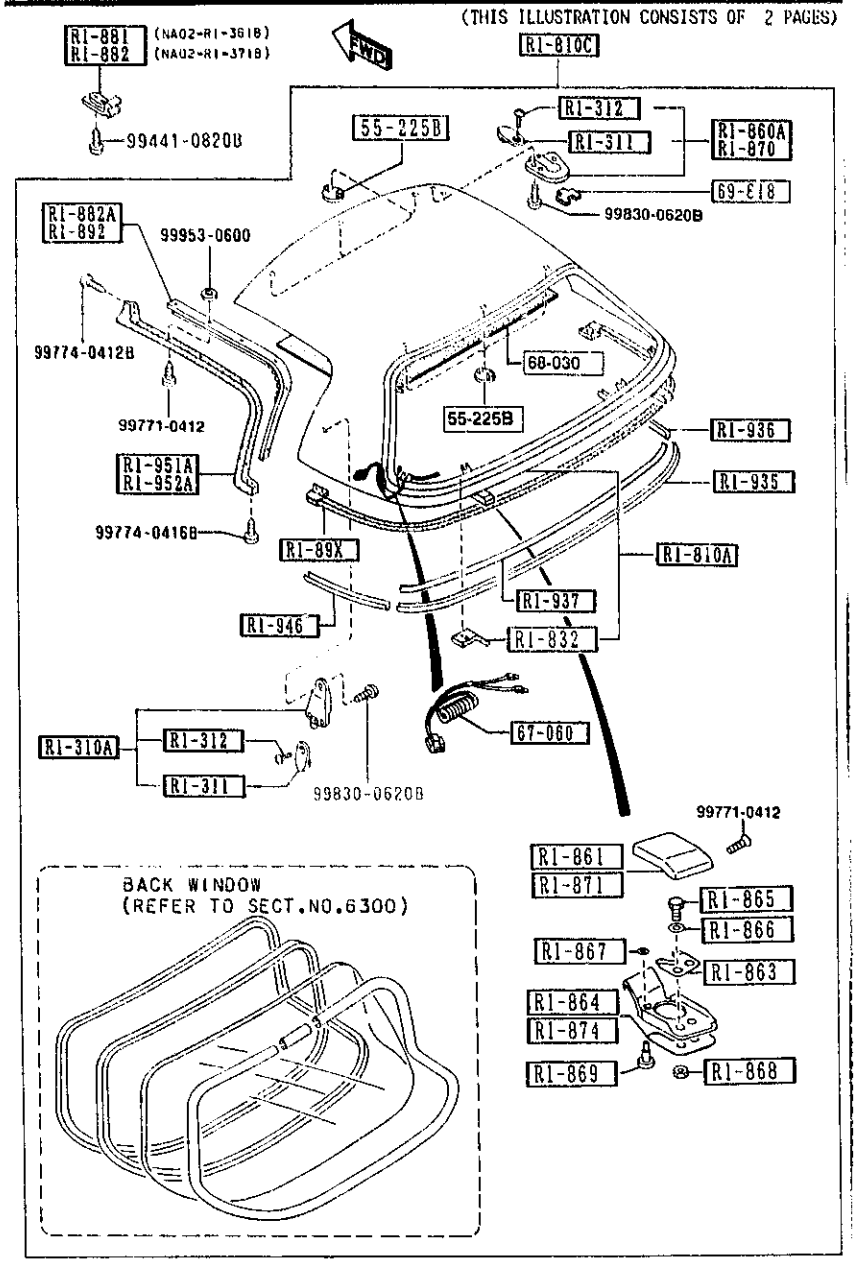

PART NO.	QTY	MODEL/RESTRICTION	MODEL/RESTRICTION	MODEL/RESTRICTION	FROM-TO
CONT'D					
NA01-R1-463	1				
R1-421		RETAINER'A'(L),WTHSTP			
NA01-R1-471	1				
R1-422		RETAINER'B'(L),WTHSTP			
NA01-R1-472	1				
R1-423		RETAINER'C'(L),WTHSTP			
NA01-R1-473	1				
R1-451		WTHSTP NO.1(R),LINK			
NA01-R1-411B	1				
R1-452		WTHSTP NO.2(R),LINK			
NA01-R1-412B	1				
R1-453		WTHSTP NO.3(R),LINK			
NA01-R1-413B	1				
R1-461		WTHSTP NO.1(L),LINK			
NA01-R1-421B	1				
R1-462		WTHSTP NO.2(L),LINK			
NA01-R1-422B	1				
R1-463		WTHSTP NO.3(L),LINK			
NA01-R1-423B	1				
R1-491		GROMMET,SCREW-RETAINER			
NA01-R1-491	16				
R1-560		RAIL,RAIN-SOFT TOP REAR			
NA01-R1-560C	1				
R1-581		PLATE(C),SET-TOP FABRIC			
NA01-R1-581B	1				
R1-582		PLATE(R),SET-TOP FABRIC			
NA01-R1-582A	1				

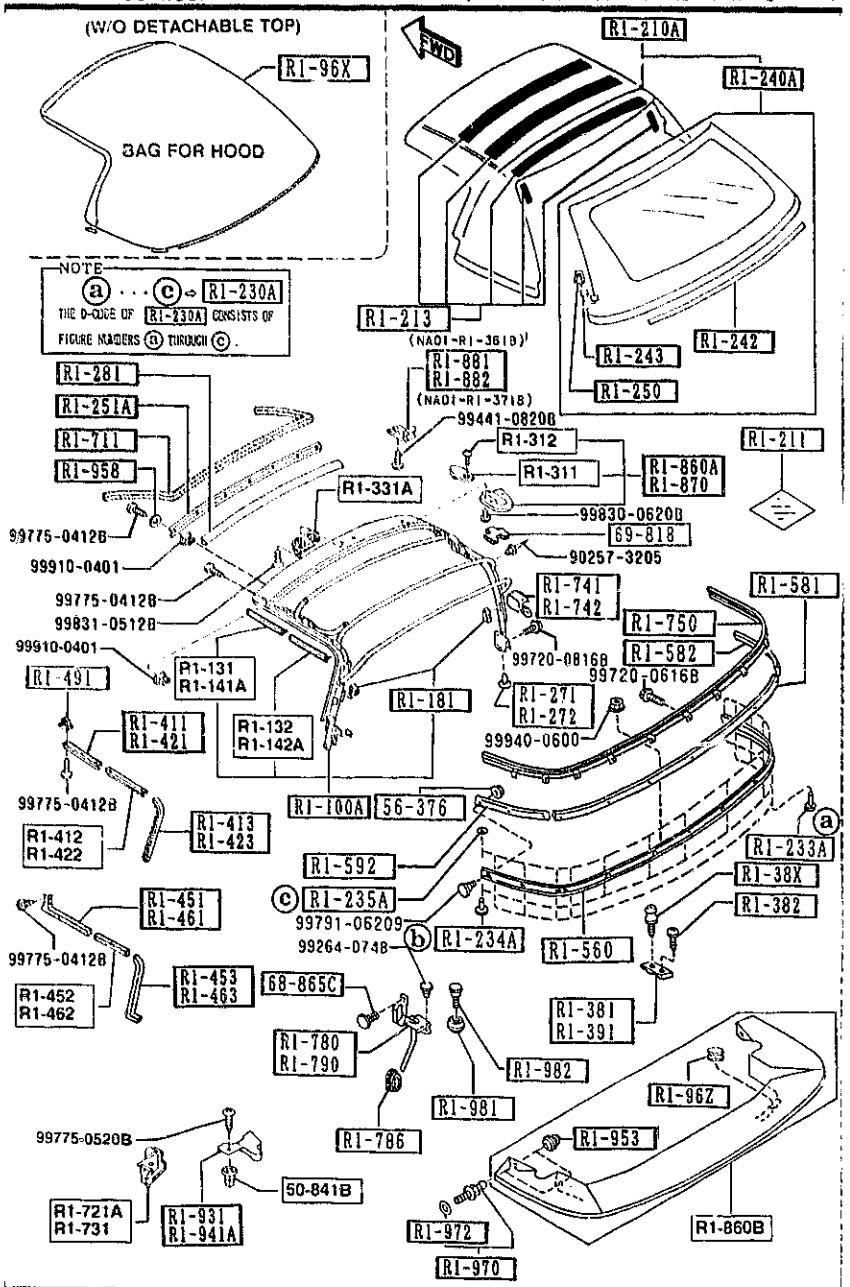

AUNA02 (CONT'D)

6330 -5 SUNROOF

PART NO.	QTY	MODEL/RESTRICTION	MODEL/RESTRICTION	MODEL/RESTRICTION	FROM-TO
R1-592		PLATE(L),SET-TOP FABRIC			
NA01-R1-592A	1				
R1-711		WTHSTP,FRONT HEADER			
NA01-R1-711B	1				
R1-721A		WTHSTP(R),CAB SIDE			
NA01-R1-721B	1				
R1-731		WTHSTP(L),CAB SIDE			
NA01-R1-731B	1				
R1-741		PROTR(R),MOULD-BELTLINE			
NA01-R1-741B	1				
R1-742		PROTR(L),MOULD-BELTLINE			
NA01-R1-742B	1				
R1-750		MOULD,BELTLINE-REAR			
NA01-R1-750D	1				
R1-780		COVER(R),DRAIN-SOFT TOP			
NA01-R1-780C	1				
R1-786		GROMMET,DRAIN HOSE-TOP			
NA01-R1-786A	2				
R1-790		COVER(L),DRAIN-SOFT TOP			
NA01-R1-790C	1				
R1-810A		PANEL,ROOF			
NA01-R1-82XA	1	(W/DETACHABLE TOP-PART COLOR)			
00	INT-	NA0 NA1			
NA02-R1-82XA	1	OPTION, (RED,W/O RR DEFG.)			-0801
NA03-R1-82X	1	OPTION, (BLUE,W/O RR DEFG.)			-0801
NA04-R1-82X	1	OPTION, (WHITE,W/O RR DEFG.)			-0801
NA06-R1-82X	1	OPTION,			0801-
0801 NA35**-205068					

CAT. AUNA02-07 1993-12

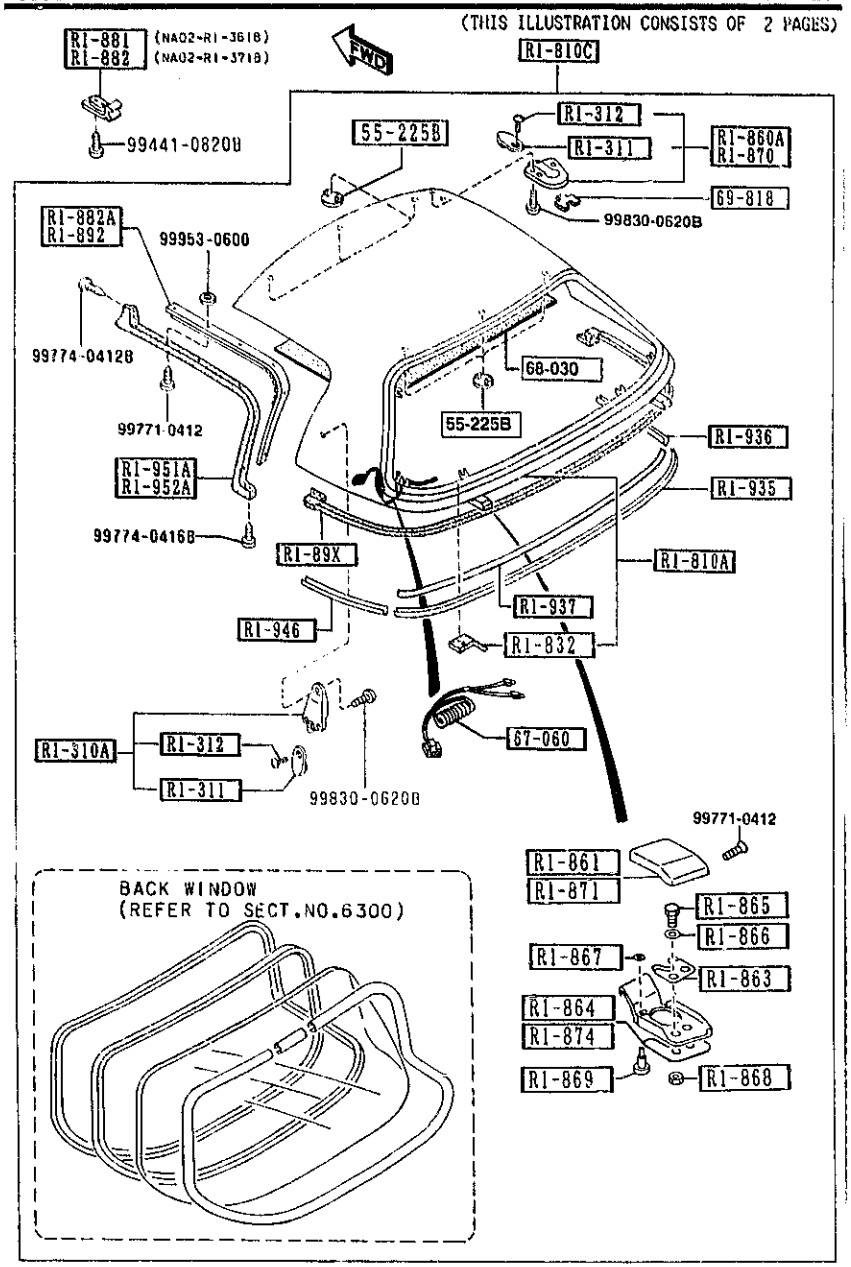

PART NO.	QTY	MODEL/RESTRICTION	MODEL/RESTRICTION	MODEL/RESTRICTION	FROM-TO
CONT'D		(W/DETACHABLE TOP-B. COLOR,)			
DU	EXT-	DU MARINER BLUE			
HU	EXT-	HU NEO GREEN			
HZ	EXT-	HZ SUNBURST YELLOW			
PZ	EXT-	PZ BRILLIANT BLACK			
SU	EXT-	SU CLASSIC RED			
UC	EXT-	UC CRYSTAL WHITE			
3L	EXT-	3L SILVER STONE METALLIC			
R1-810C		ROOF,DETACHABLE TOP			
NA02-R1-810F	1	OPTION, (RED,W/O RR DEFG.)			-0801
NA03-R1-810	1	OPTION, (BLUE,W/O RR DEFG.)			-0801
NA04-R1-810	1	OPTION, (WHITE,W/O RR DEFG.)			-0801
NA06-R1-810	1	(W/DETACHABLE TOP-B. COLOR, W/O RR DEFG.)			0801-1801
DU	EXT-	DU MARINER BLUE			
HU	EXT-	HU NEO GREEN			
HZ	EXT-	HZ SUNBURST YELLOW			
PZ	EXT-	PZ BRILLIANT BLACK			
SU	EXT-	SU CLASSIC RED			
UC	EXT-	UC CRYSTAL WHITE			
3L	EXT-	3L SILVER STONE METALLIC			
NA30-R1-810A	1	OPTION, (W/DETACHABLE TOP-PART COLOR, W/RR DEFG.)			1801-
00	EXT-	DU HU HZ PZ SU UC 3L BLACK			
N007-R1-810A	1	OPTION, (W/DETACHABLE TOP-B. COLOR, W/RR DEFG.)			1801-
DU	EXT-	DU MARINER BLUE			
HU	EXT-	HU NEO GREEN			
HZ	EXT-	HZ SUNBURST YELLOW			

0801 NA35**-205068
1801 NA35**-300014

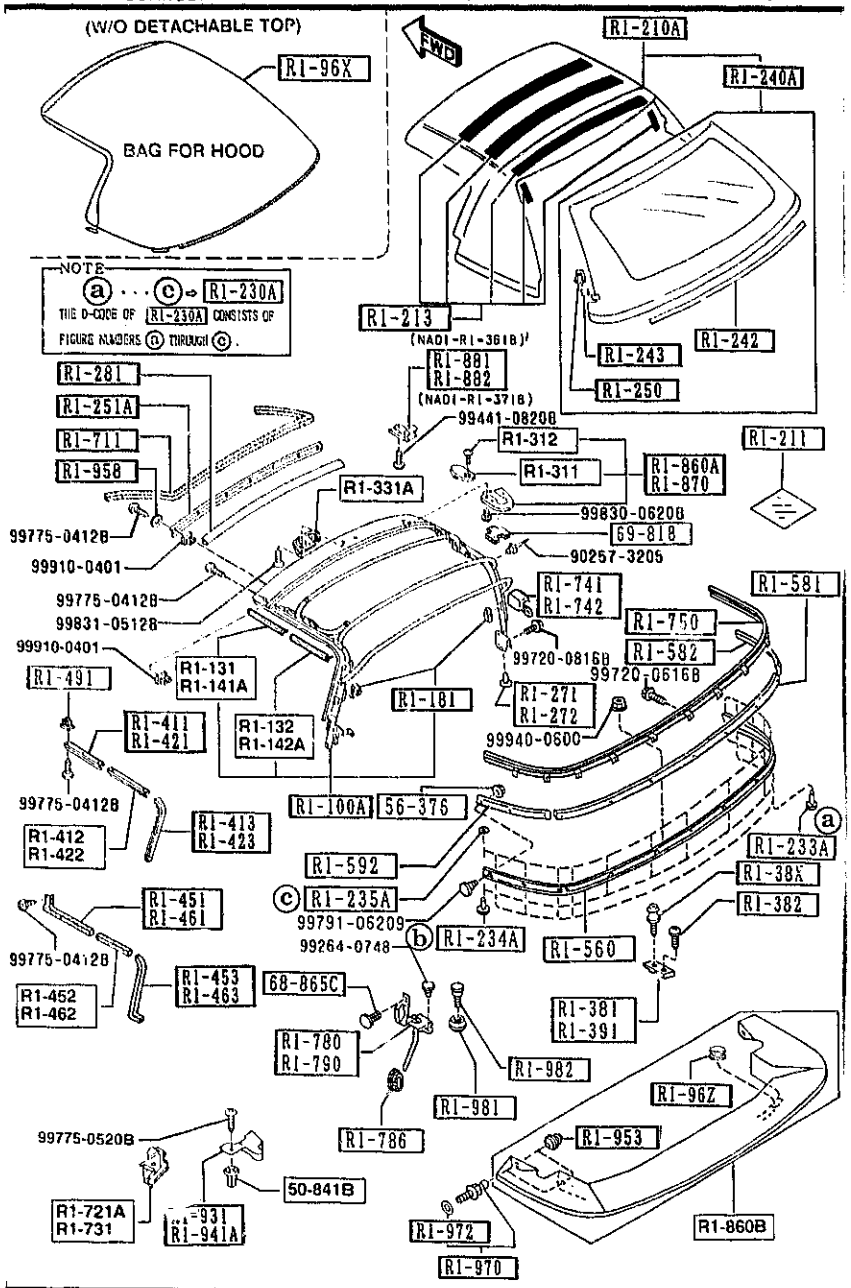

AUNA02 (CONT'D)

PART NO.	QTY	MODEL/RESTRICTION	MODEL/RESTRICTION	MODEL/RESTRICTION	FROM-TO
CONT'D					
PZ	EXT-	PZ BRILLIANT BLACK			
SU	EXT-	SU CLASSIC RED			
UC	EXT-	UC CRYSTAL WHITE			
3L	EXT-	3L SILVER STONE METALLIC			
R1-832		PLATE,CUSHION-D. TOP			
NA01-R1-832A	2	OPTION, (W/DETACHABLE TOP)			
R1-860A		LOCK(R),TOP			
NA01-R1-310B	1	BASE, (W/O DETACHABLE TOP)			
NA01-R1-310B	2	OPTION, (W/DETACHABLE TOP)			
R1-860B		BOOT,TOP			
NA01-R1-960B A (NA01-R1-960C)	1				-0801
66	INT-	NA0 BLACK			
88	INT-	NA1 TAN			
NA01-R1-960C A (NA01-R1-960D)	1				0801-0820
66	INT-	NA0 BLACK			
88	INT-	NA1 TAN			
NA01-R1-960D	1				0820-
66	INT-	NA0 BLACK			
88	INT-	NA1 TAN			
R1-861		COVER(R),DECK LOCK			
NA01-R1-861	1				1201-
R1-863		PLATE,DECK LOCK			
NA01-R1-863	2				1201-
R1-864		SHEET(R),DECK LOCK			
NA01-R1-864	1				1201-
R1-865		BOLT,DECK LOCK			
NA01-R1-865	4				1201-

0801 NA35**-205068
0820 NA35**-206394
1201 NA35**-228219

(THIS ILLUSTRATION CONSISTS OF 2 PAGES)

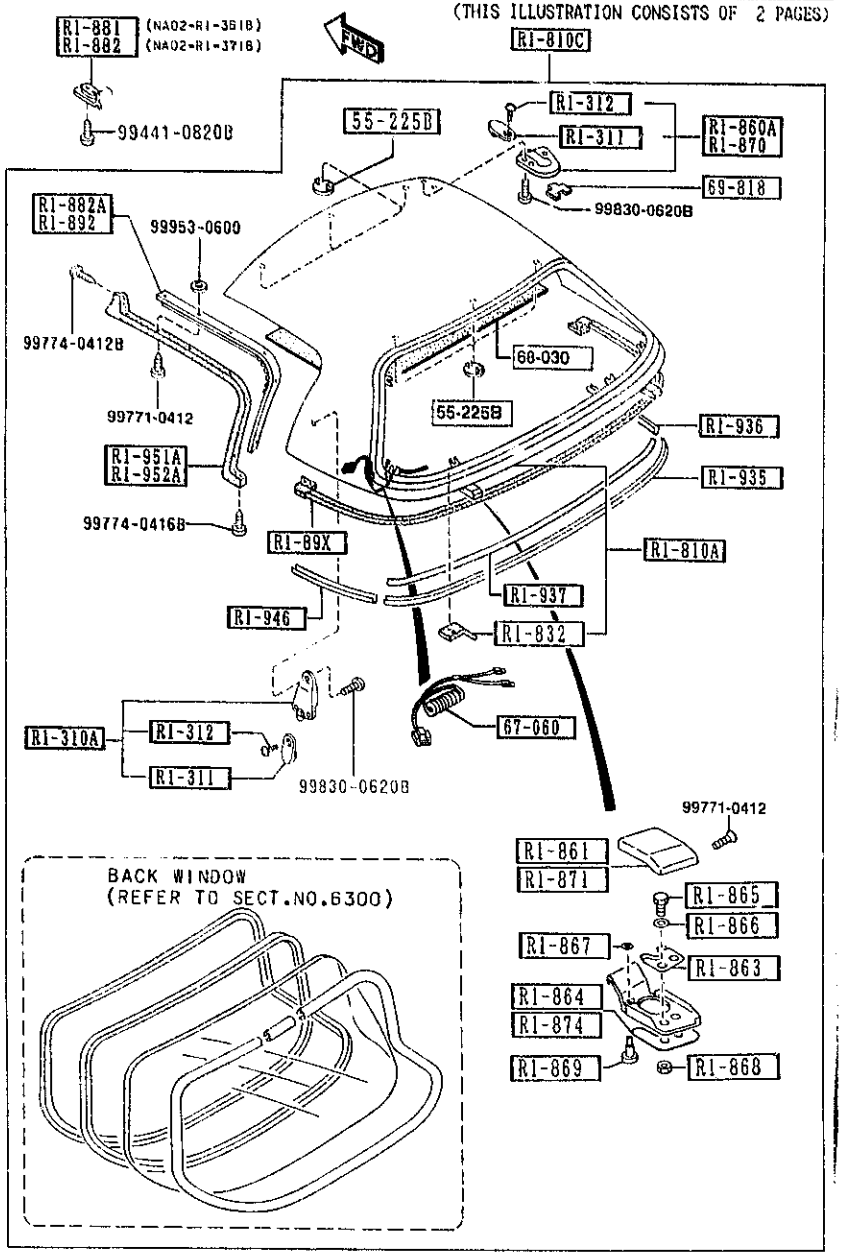

AUNA02

6330 -8 SUNROOF

PART NO.	QTY	MODEL/RESTRICTION	MODEL/RESTRICTION	MODEL/RESTRICTION	FROM-TO
R1-866		WASHER'A',DECK LOCK			
NA01-R1-866	4				1201-
R1-867		WASHER'B',DECK LOCK			
NA01-R1-867	2				1201-
R1-868		NUT,DECK LOCK			
NA01-R1-868	4				1201-
R1-869		PIN,DECK LOCK			
NA01-R1-869	2				1201-
R1-870		LOCK(L),TOP			
NA01-R1-320B	1	BASE, (W/O DETACHABLE TOP)			
NA01-R1-320B	2	OPTION, (W/DETACHABLE TOP)			
R1-871		COVER(L),DECK LOCK			
NA01-R1-871	1				1201-
R1-874		SHEET(L),DECK LOCK			
NA01-R1-874	1				1201-
R1-881		STRIKER(R),LOCK-TOP			
NA01-R1-361B	1				
NA02-R1-361B	1	OPTION, (W/DETACHABLE TOP)			
R1-882		STRIKER(L),LOCK-TOP			
NA01-R1-371B	1				
NA02-R1-371B	1	OPTION, (W/DETACHABLE TOP)			
R1-882A		RETAINER(R),WTHSTP-D.TOP			
NA01-R1-882	1	OPTION, (W/DETACHABLE TOP)			
R1-89X		WEATHERSTRIP,D.TOP-REAR			
NA01-R1-89XA	1	OPTION, (W/DETACHABLE TOP)			

1201 NA35**-228219

CAT. AUNA02-07

1993-12

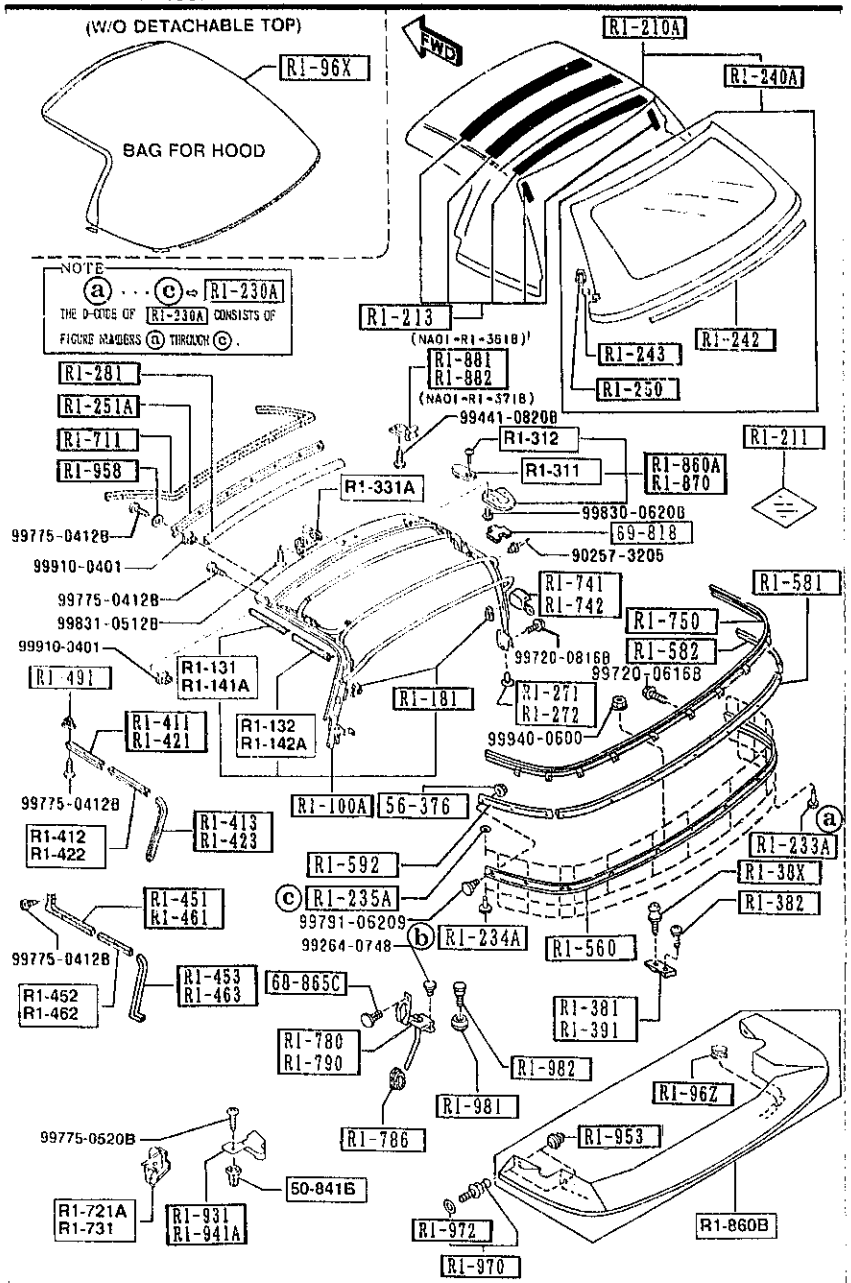

AUNA02 (CONT'D)

6330 -9 SUNROOF

PART NO.	QTY	MODEL/RESTRICTION	MODEL/RESTRICTION	MODEL/RESTRICTION	FROM-TO
R1-892		RETAINER(L),WTHSTP-D.TOP			
NA01-R1-892	1	OPTION, (W/DETACHABLE TOP)			
R1-931		COVER(R),BELT LINE			
NA01-R1-931A	1				
R1-935		PROTECTOR(C),EDGE-D.TOP			
NA01-R1-935A	1	OPTION, (W/DETACHABLE TOP)			-0A03
NA01-R1-935B	1	OPTION, (W/DETACHABLE TOP)			0A03-
R1-936		PROTECTOR(R),EDGE-D.TOP			
NA01-R1-936	1	OPTION, (W/DETACHABLE TOP)			-0A03
NA01-R1-936A	1	OPTION, (W/DETACHABLE TOP)			0A03-
R1-937		TAPE,EDGE PROTECTOR-CTR			
NAY1-R1-937	1				
R1-941A		COVER(L),BELT LINE			
NA01-R1-941A	1				
R1-946		PROTECTOR(L),EDGE-D.TOP			
NA01-R1-946	1	OPTION, (W/DETACHABLE TOP)			-0A03
NA01-R1-946A	1	OPTION, (W/DETACHABLE TOP)			0A03-
R1-951A		WTHSTP(R),ROOF PANEL			
NA01-R1-881B	1	OPTION, (W/DETACHABLE TOP)			
R1-952A		WTHSTP(L),ROOF PANEL			
NA01-R1-891B	1	OPTION, (W/DETACHABLE TOP)			
R1-953		HOOK,HOOD-REAR CORNER			
B235-R1-953	4				
R1-958		WASHER,HOOK'A'&'B'			
B235-R1-958A	7				

0A03 NA35**-213510

CAT. AUNA02-07 1993-12

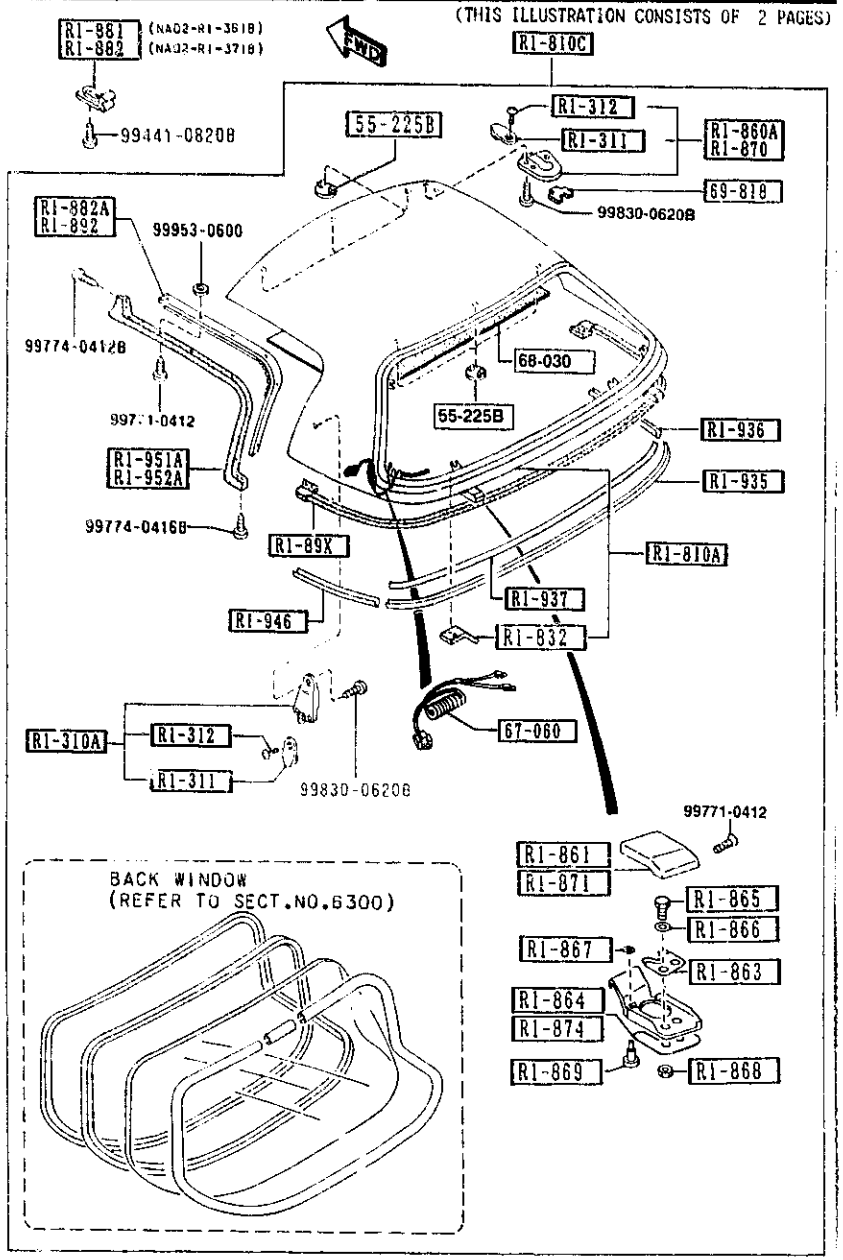

AUNA02

6330 -10 SUNROOF

PART NO.	QTY	MODEL/RESTRICTION	MODEL/RESTRICTION	MODEL/RESTRICTION	FROM TO
R1-96X		COVER,TOP FABRIC			
NA01-R1-96XB A (NA01-R1-96XC)	1				-0A17
NA01-R1-96XC	1	BASE, (W/O DETACHABLE TOP)			0A17-
R1-96Z		HOOK,TOP BOOT			
NA01-R1-96Z	7				0801-
00	INT-	NA0 BLACK			
75	INT-	NA1 NA2 SILVER			
R1-970		HOOK,REAR DECK			
NA01-R1-970A	4				
R1-972		WASHER,HOOK'A'			
NA01-R1-926	4				
R1-981		STOPPER,SOFT TOP			
NA01-R1-981A	2				
R1-982		BOLT,STOPPER-SOFT TOP			
NA01-R1-982A	2				
50-841B		GROMMET,SCREW			
H260-50-841	2				
55-225B		COVER,HOLE			
G030-55-225	6	OPTION, (W/DETACHABLE TOP)			
00	INT-	NA0 NA1 NA2 BLACK			
56-376		NUT,SELF LOCK			
B001-56-376	13				
67-060		HARNESS NO.2,REAR			
N007-67-060A	1				1801-
68-030		CEILING,TOP			
N007-68-031	1				1801-
00	INT-	NA0 NA1 NA2 BLACK			

0801 NA35**-205068
0A17 NA35**-215349
1801 NA35**-300014

CAT. AUNA02-07 1993-12

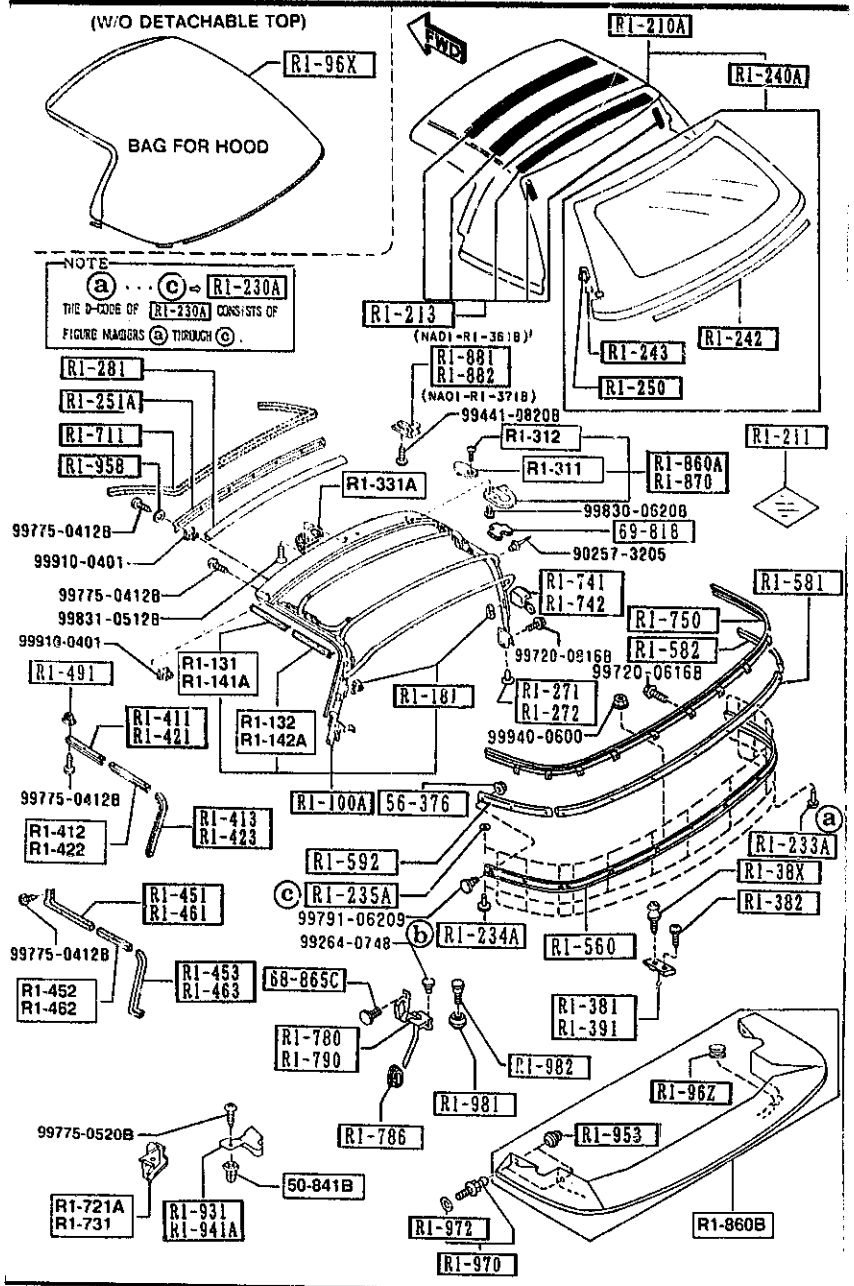

AUNA02 (CONT'D)

6330 -11* SUNROOF

PART NO.	QTY	MODEL/RESTRICTION	MODEL/RESTRICTION	MODEL/RESTRICTION	FROM-TO
68-865C		FASTENER			
G032-68-865A	2				
00	INT-	NA0 NA1 BLACK			
69-818		PAD			
NA01-R1-313	2	OPTION, (W/DETACHABLE TOP-B. COLOR.)			

CAT. AUNA02-07 1993-12

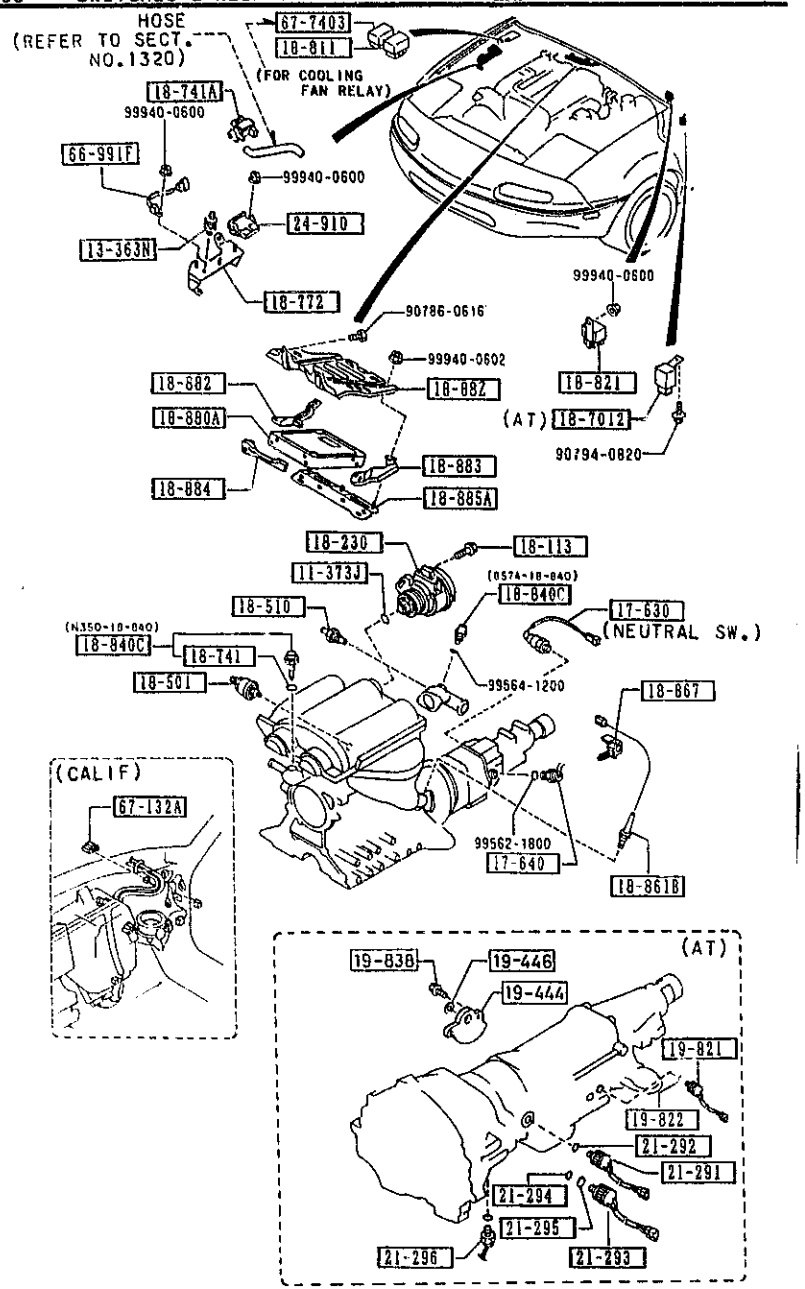

PART NO.	QTY	MODEL/RESTRICTION	MODEL/RESTRICTION	MODEL/RESTRICTION	FROM-TO
11-373J 99541-03801	1	RING,'O'			
13-363N 0222-13-363	1	RUBBER,MOUNTING			
17-630 8118-17-640B	1	SWITCH (MT)			
17-640 M506-17-640 A (M506-17-640A)	1	SWITCH,BACK UP LAMP			-2216
M506-17-640A	1	(MT)			2216-
18-T41 F885-18-T41	1	RING,'O'-WATER THERM O SW.			
18-113 B366-18-1A5	1	BOLT			
18-230 B61P-18-230 AN(B61P-18-230A)	1	SENSOR,CRANKSHAFT PO SI.			-2408
B61P-18-230A	1				2408-
18-501 B61P-18-501	1	SWITCH,OIL PRESSURE			
18-510 B541-18-51X	1	UNIT,HEAT GAUGE PANASONIC			
18-7012 B64J-18-780B	1	UNIT,CONTROL (AT)			
18-741A JE16-18-741	1	VALVE,THREE WAY NIHON OIL SEAL			
18-772 B61P-18-2F0B	1	BRACKET,IGNITER			

2216 NA35**-318291
2408 NA35**-323024

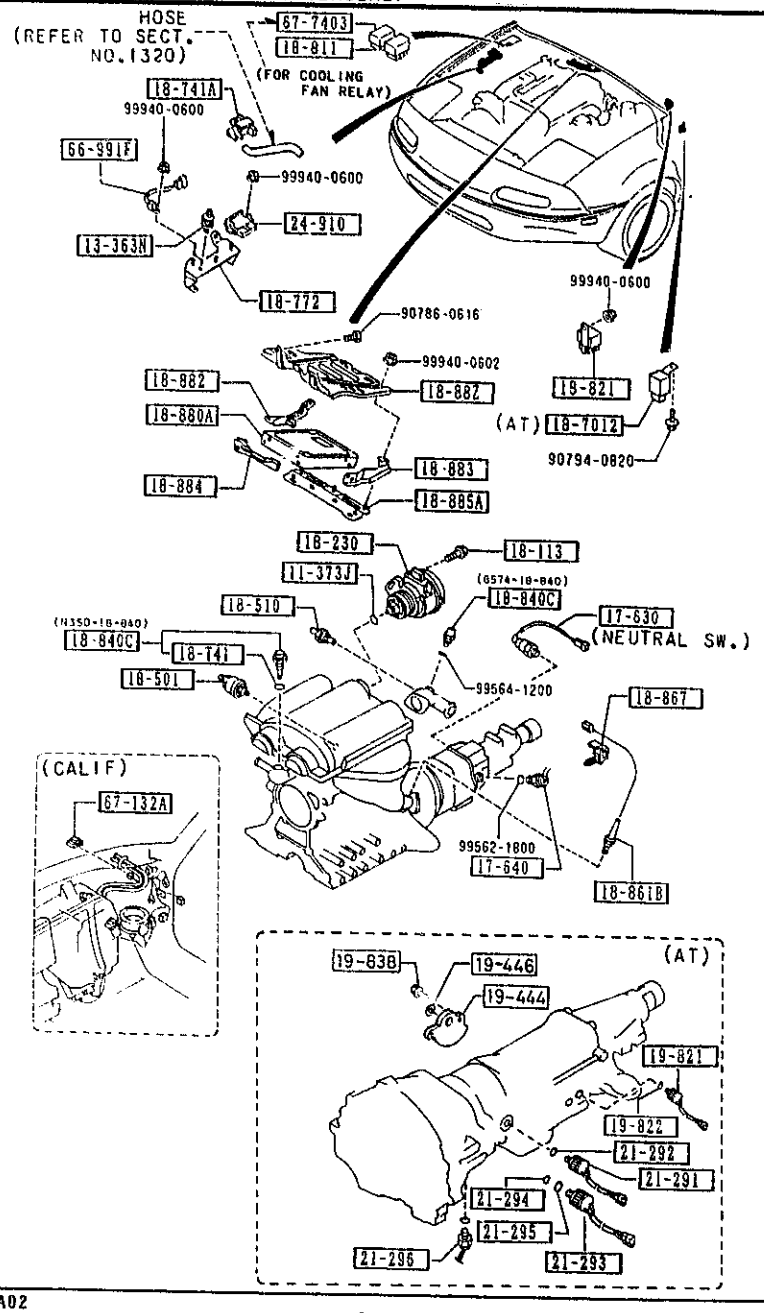

AUNA02

PART NO.	QTY	MODEL/RESTRICTION	MODEL/RESTRICTION	MODEL/RESTRICTION	FROM-TO
18-811		RELAY,MAIN			
B6S8-18-811	1				
18-821		RELAY,FUEL PUMP			
N236-18-821	1				
18-840C		SENSOR,TEMP.-ENG.COOLANT			
N350-18-840	1	DENSO			
8574-18-840	1	DENSO			
18-861B		SENSOR,OXYGEN			
B61R-18-861A	1				
18-867		CLIP			
FE30-18-867A	2				
18-88Z		COVER,CONTROL UNIT			
B65K-18-88Z	1				
18-880A		MODULE,POWERTRAIN CONTROL			
B64J-18-881	1	(AT)			
B61P-18-881A	1				-0926
A (B61P-18-881B)					
B61P-18-881B	1	(MT)			0926-
18-882		BRACKET,CONTROL UNIT			
B61P-18-882	1				
18-883		BRACKET,CONTROL UNIT			
B61P-18-883	1				
18-884		BRACKET,CONTROL UNIT			
B61P-18-884	1				
18-885A		BRACKET,CONTROL UNIT			
B61P-18-885	1				
19-444		SWITCH,INHIBITOR			
BU55-19-444A	1	(AT)			

0926 NA35**-212200

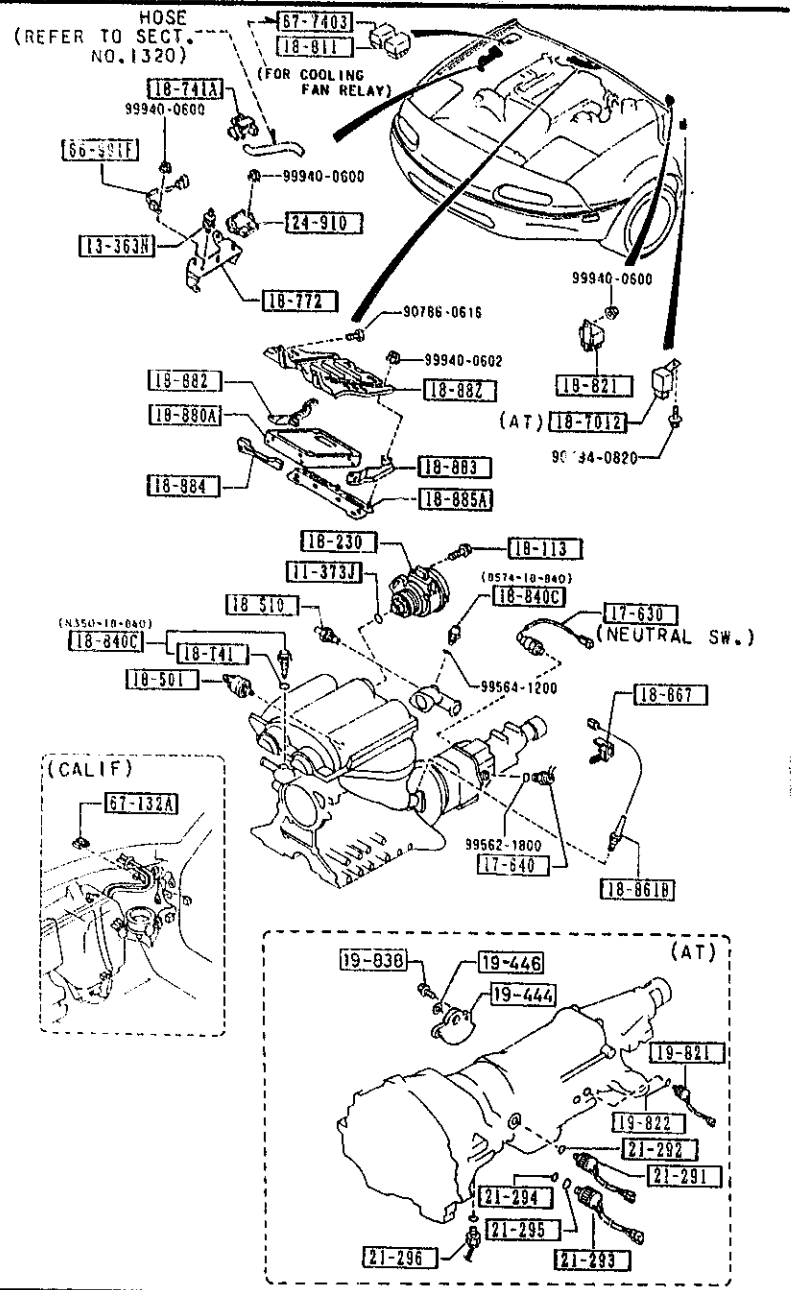

PART NO.	QTY	MODEL/RESTRICTION	MODEL/RESTRICTION	MODEL/RESTRICTION	FROM-TO
19-446		RING,'O'			
0338-19-446	1	(AT)			
19-821		SOLENOID,DOWN SHIFT			
BU55-19-821	1	(AT)			
19-822		SEAL,'O'RING			
0338-19-822	2	(AT)			
19-838		BOLT-HEX,HD WASHER			
1758-19-838 A (1758-19-838A)	2				-1301
1758-19-838A	2	(AT)			1301-
21-291		SWITCH,OIL PRESSURE			
BU55-21-2J1	1	(AT)			
21-292		RING,'O'			
BU01-21-292A	1	(AT)			
21-293		SOLENOID,OVER DRIVE			
BU55-21-2J3	1	(AT)			
21-294		RING,'O'			
BU01-21-294	1	(AT)			
21-295		RING,'O'			
BU01-21-295	1	(AT)			
21-296		SOLENOID,LOCK UP CONTROL			
BU55-21-3A5	1	(AT)			
24-910		IGNITION,ELECTRIC			
B61P-18-251	1				
66-991F		CONDENSER			
B376-66-991	1				
67-132A		CONNECTOR,SHORT			
HB23-67-741	1	(CALIF.)			

1301 NA35**-231464

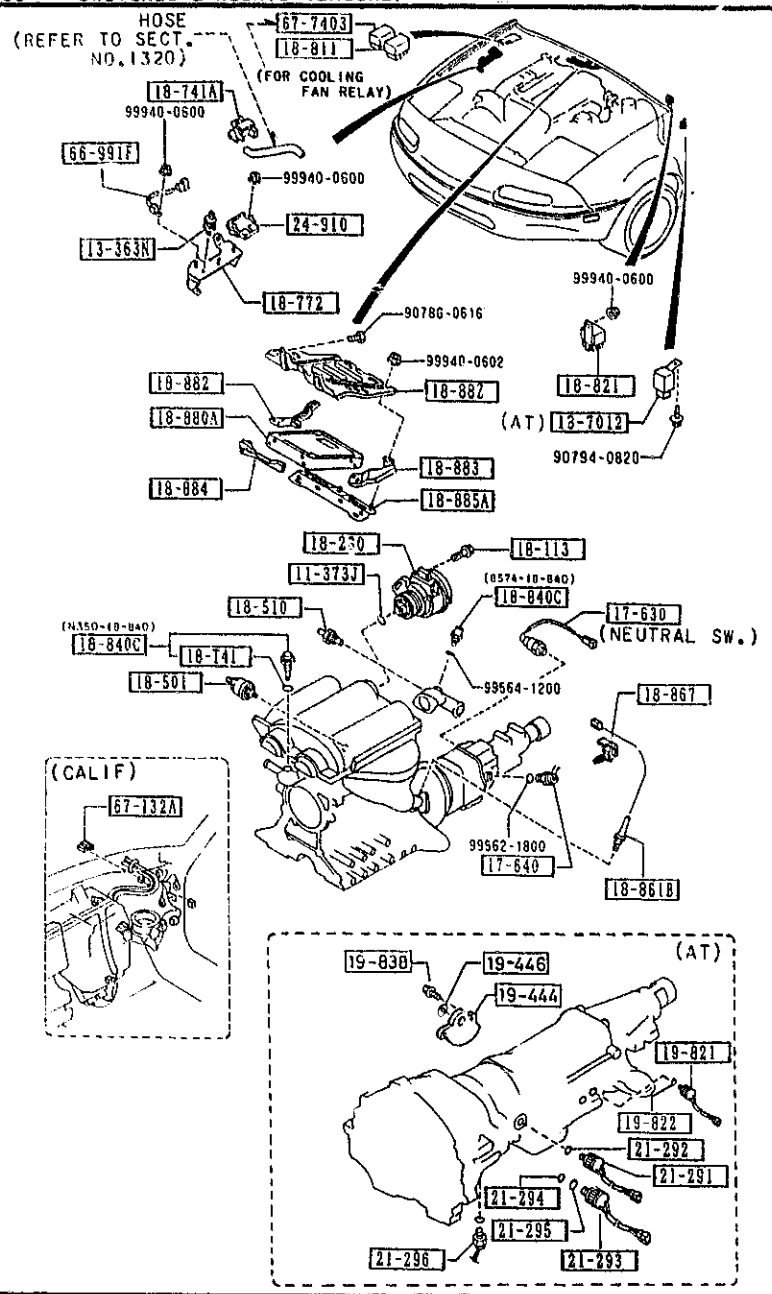

PART NO.	QTY	MODEL/RESTRICTION	MODEL/RESTRICTION	MODEL/RESTRICTION	FROM-TO
67-7403 LA10-67-740	1	RELAY,N.O. 10A (FOR COOLING FAN RELAY)			

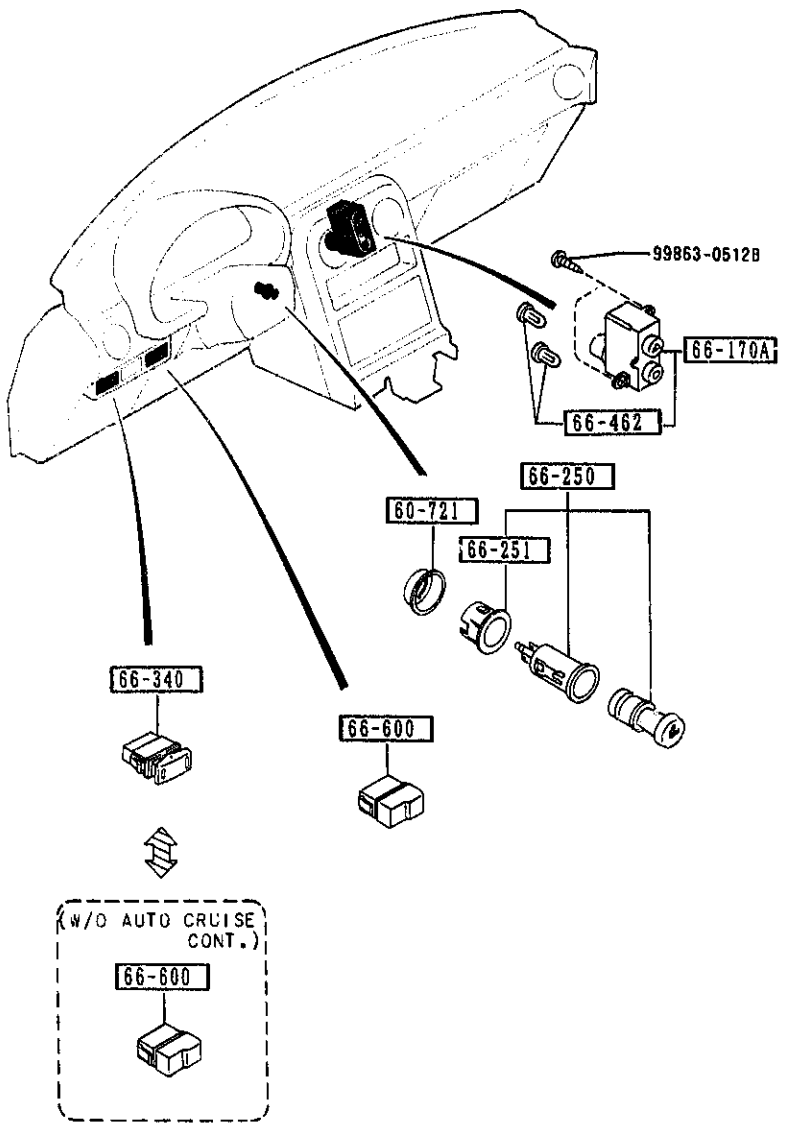

PART NO.	QTY	MODEL/RESTRICTION	MODEL/RESTRICTION	MODEL/RESTRICTION	FROM-TO
60-721		PROTECTOR			
B092-66-241A	1				
66-170A		SWITCH(R),CLUSTER			
NA01-66-170	1				
66-250		LIGHTER,CIGAR			
B150-66-250	1				
66-251		RING,ILLUMINATION			
B901-66-251	1				
66-340		SWITCH,MAIN			
NA01-66-340A	1	PKG-OPT. (W/AUTO CRUISE CONT)			
66-462		BULB'B',SWITCH-RR DEFOGER			
NA01-66-462	2				
66-600		COVER,HOLE			
B481-55-225	2	BASE, (W/O AUTO CRUISE CONT.)			

(W/O AUTO CRUISE CONT.)
(W/AUTO CRUISE CONT)



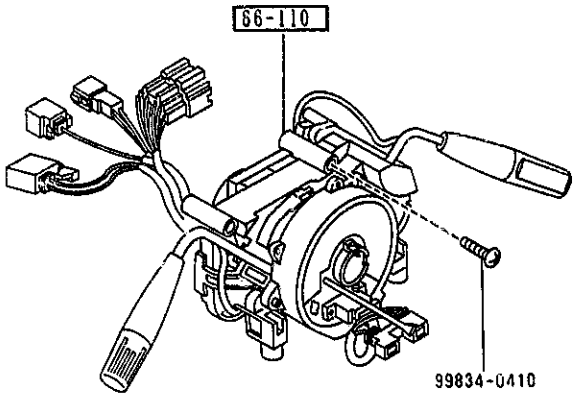

6611 -1 * COMBINATION SWITCH

PART NO.	QTY	MODEL/RESTRICTION	MODEL/RESTRICTION	MODEL/RESTRICTION	FROM-TO
66-110		SWITCH,COMBINATION			
NA01-66-120A	1	BASE, (W/O AUTO CRUISE CONT.)			
NA02-66-120A	1	PKG-OPT, (W/AUTO CRUISE CONT)			

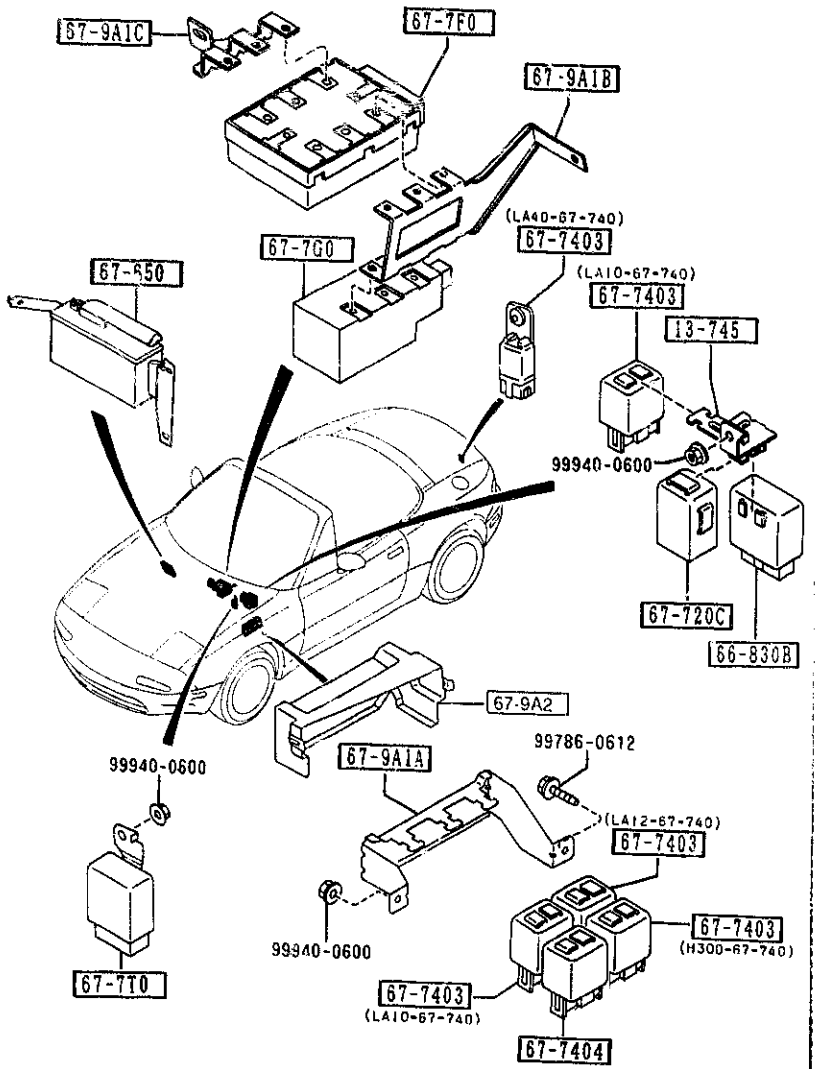

PART NO.	QTY	MODEL/RESTRICTION	MODEL/RESTRICTION	MODEL/RESTRICTION	FROM-TO
13-745		BRACKET,RELAY			
NA02-67-9A1	1				
66-830B		UNIT,FLASHER			
HE01-66-830	1				
67-650		BOX,CONTROL-A.B.S.			
NA17-67-650A	1				
67-7F0		UNIT,DIAGNOSIS-AIR BAG			
NA01-67-7F0A	1				
67-7G0		UNIT,BACK UP POWER-A.BAC			
NA01-67-7G0A	1				
67-7T0		UNIT,TIMER-REAR DEFG.			
NA01-67-7T0	1				1801-
67-720C		TIMER & BUZZER			
NA02-67-720	1				
67-7403		RELAY,N.O.			
H300-67-740	1	30A (HEAD LAMP RELAY)			
LA10-67-740	2	10A (HORN RELAY) (SMALL LAMP RELAY) (MT)			
LA10-67-740	3	10A (HORN RELAY) (KICK DOWN RELAY) (SMALL LAMP RELAY) (AT)			
LA12-67-740	1	(RETRACTOR RELAY)			
LA40-67-740	1	(REAR DEFOGGER RELAY)			1801-
67-7404		RELAY,TRANSFER			
HD22-67-740	1				
67-9A1A		BRACKET,RELAY			
NA01-67-9A1	1				

1801 NA35**-300014

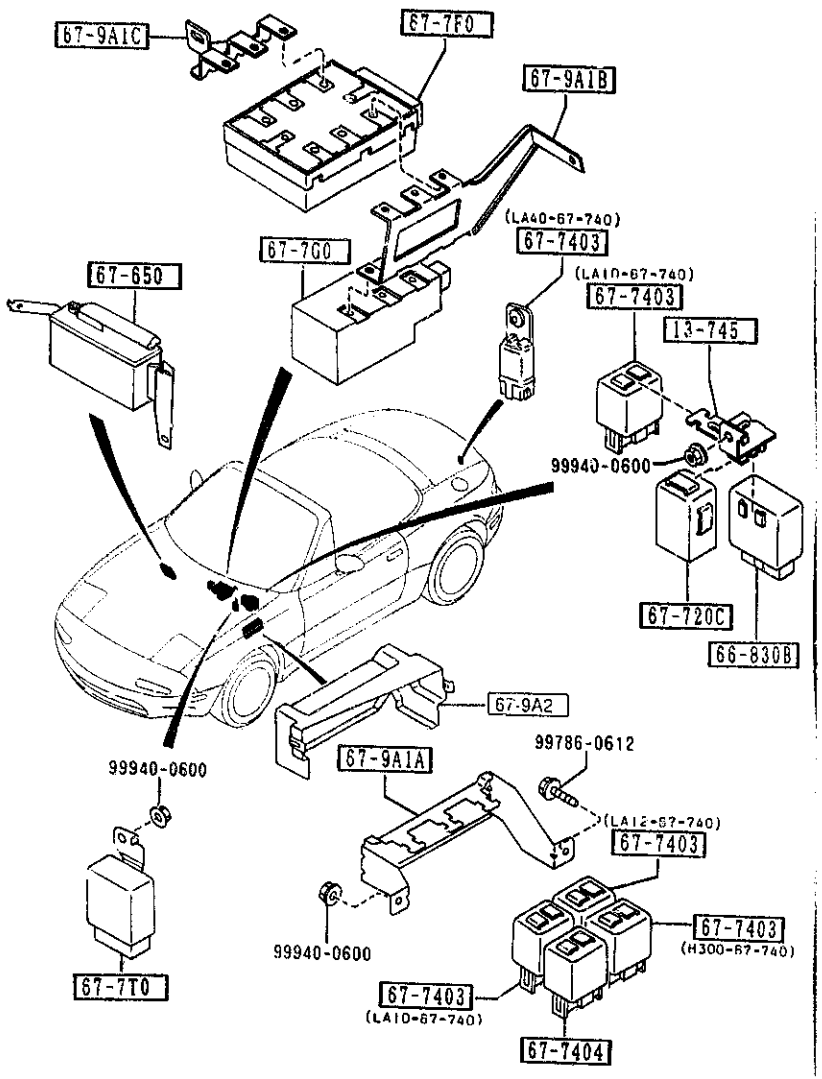

PART NO.	QTY	MODEL/RESTRICTION	MODEL/RESTRICTION	MODEL/RESTRICTION	FROM-TO
67-9A1B		BRKT,DIAGNOSIS UNIT			
NA06-67-9A1B	1				
67-9A1C		BRKT,DIAGNOSIS/POWER UNIT			
NA05-67-9A1B	1				
67-9A2		COVER,RELAY			
*NA02-67-9A2	1				

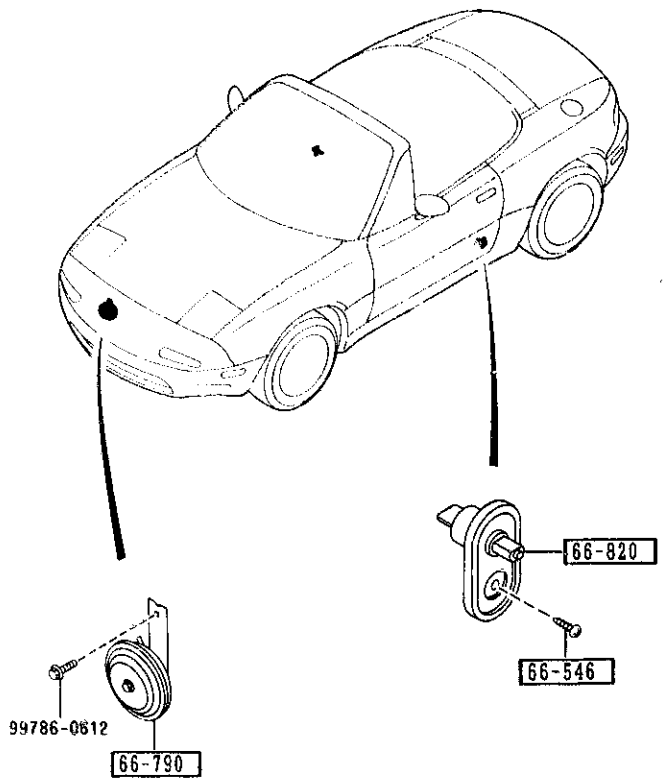

6635 -1 * DOOR SWITCH & HORNS

PART NO.	QTY	MODEL/RESTRICTION	MODEL/RESTRICTION	MODEL/RESTRICTION	FROM-TO
66-546		SCREW,DOOR SWITCH			
LA01-66-546	2				
66-790		HORN,LOW TONE			
SA59-66-790	1				
66-820		SWITCH,DOOR			
B455-66-540	2				

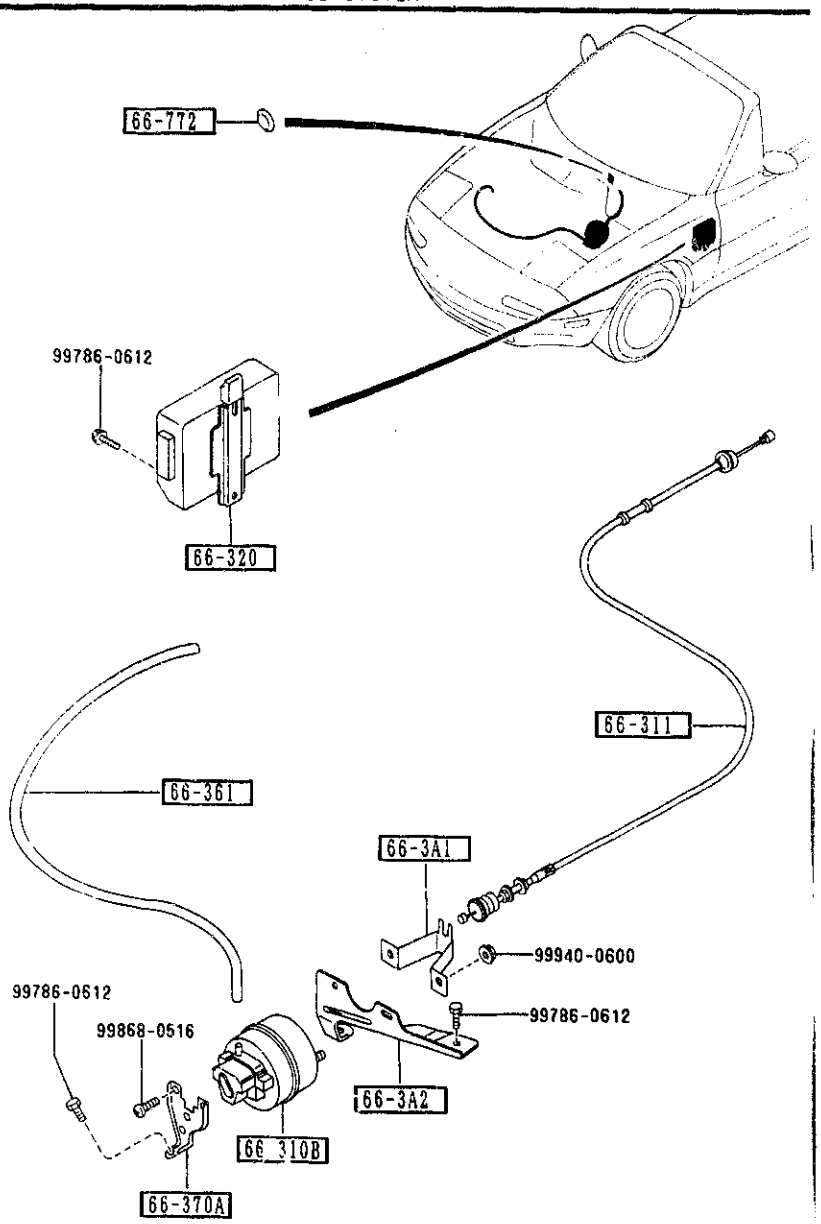

PART NO.	QTY	MODEL/RESTRICTION	MODEL/RESTRICTION	MODEL/RESTRICTION	FROM TO
66-3A1		BRACKET,ACTUATOR-A.C.C.			
LA01-66-3A1	1				
66-3A2		BRACKET,ACTUATOR-FRONT			
NA01-66-3A2A	1				
66-310B		ACTUATOR,A.C.C.			
LA01-66-310A	1				
66-311		WIRE,A.C.C.			
NA01-66-311A	1				
66-320		BOX,A.C.C.			
NA01-66-320	1				
66-361		PIPE,AUTO CRUISE CONTROL			
NA01-66-361	1				
66-370A		BRACKET,ACTUATOR			
NA01-66-3A3A	1				
66-772		GROMMET			
B092-41-661	1	BASE, (W/O AUTO CRUISE CONT.)			

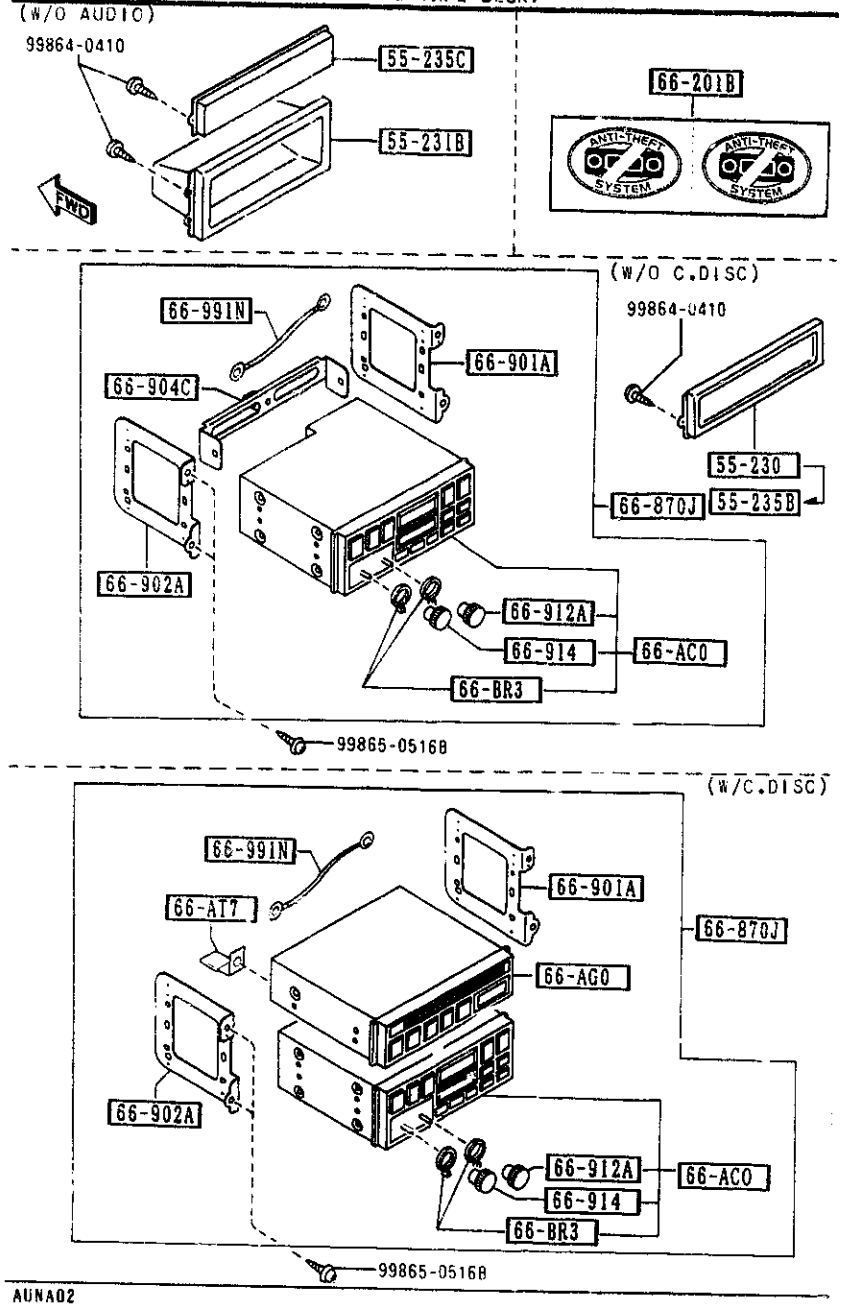

AUNA02

PART NO.	QTY	MODEL/RESTRICTION	MODEL/RESTRICTION	MODEL/RESTRICTION	FROM-TO
55-230		PANEL,AUDIO			
NA01-55-231	1	PKG-OPT, (W/AUDIO,W/O C.DISC)			-1801
55-231B		ORNAMENT,STEREO			
FC02-55-235A	1	BASE, (W/O AUDIO)			
55-235B		ORNAMENT,STEREO-UPPER			
LA03-55-235A	1	PKG-OPT, (W/AUDIO,W/O C.DISC)			1801-
55-235C		ORNAMENT,STEREO-LOWER			
LA02-55-235	1	BASE, (W/O AUDIO)			
66-AC0		TUNER & DECK,COMB.			
NA01-66-AC0	1	PKG-OPT, (W/AUDIO)			-1628
NA01-66-AC0A	1	PKG-OPT, (W/AUDIO)			1628-
66-AG0		PLAYER,COMPACT DISC			
NA01-66-AG0	1	OPTION, (W/C.DISC)			
66-AT7		BRACKET(RR),AUDIO			
NA03-66-AT7	1	OPTION, (W/C.DISC)			
66-BR3		KNOB,BALANCE-TUNER			
NA01-66-BR3	2	PKG-OPT, (W/AUDIO)			
66-201B		LABEL,ANTI THEFT-AUDIO			
NA01-66-201	1	PKG-OPT, (W/AUDIO)			
66-870J		AUDIO SET			
NA02-66-9C0	1	PKG-OPT, (W/AUDIO,W/O C.DISC)			-1628
NA03-66-9W0	1	OPTION, (W/C.DISC)			-1628

1628 NA35**-235561
1801 NA35**-300014

CAT. AUNA02-07

1993-12

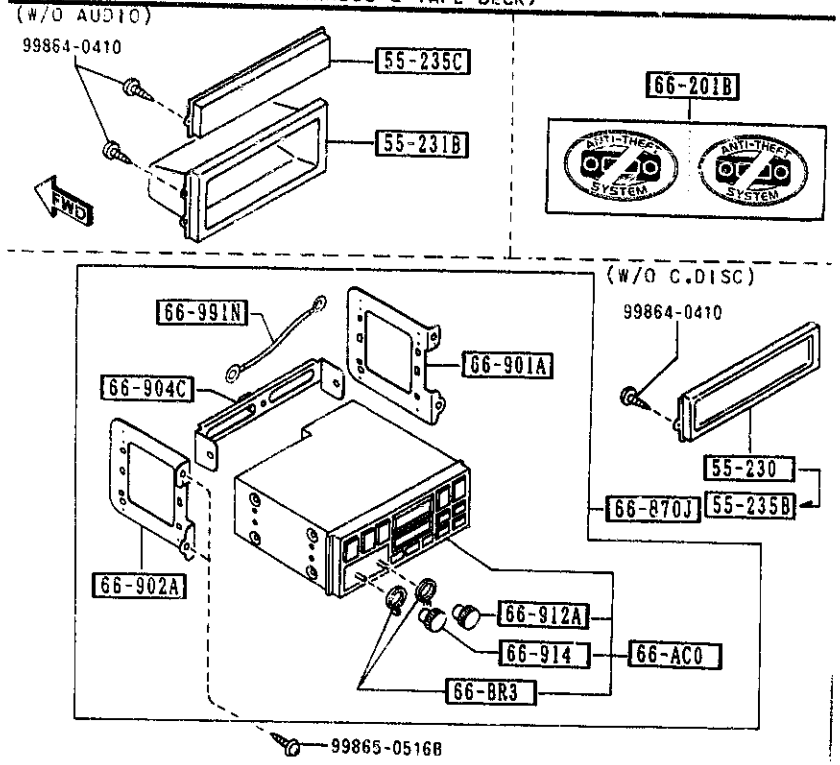

AUNA02

PART NO.	QTY	MODEL/RESTRICTION	MODEL/RESTRICTION	MODEL/RESTRICTION	FROM-TO
CONT'D					
NA02-66-9C0A	1	PKG-OPT, (W/AUDIO,W/O C.DISC)			1628-
NA03-66-9W0A	1	OPTION, (W/C.DISC)			1628-
66-901A		BRACKET(R),TUNER			
NA01-66-AT1	1				
66-902A		BRACKET(L),TUNER			
NA01-66-AT2	1				
66-904C		BRACKET,LOW			
NA01-66-AT6	1	PKG-OPT, (W/AUDIO,W/O C.DISC)			
66-912A		KNOB,TUNE-TUNER			
NA01-66-BR2	1	PKG-OPT, (W/AUDIO)			
66-914		KNOB,VOLUME-TUNER			
NA01-66-BR1	1	PKG-OPT, (W/AUDIO)			
66-991N		CORD,EARTH			
NA01-66-997	1				

1628 NA35**-235561

CAT. AUNA02-07

1993-12

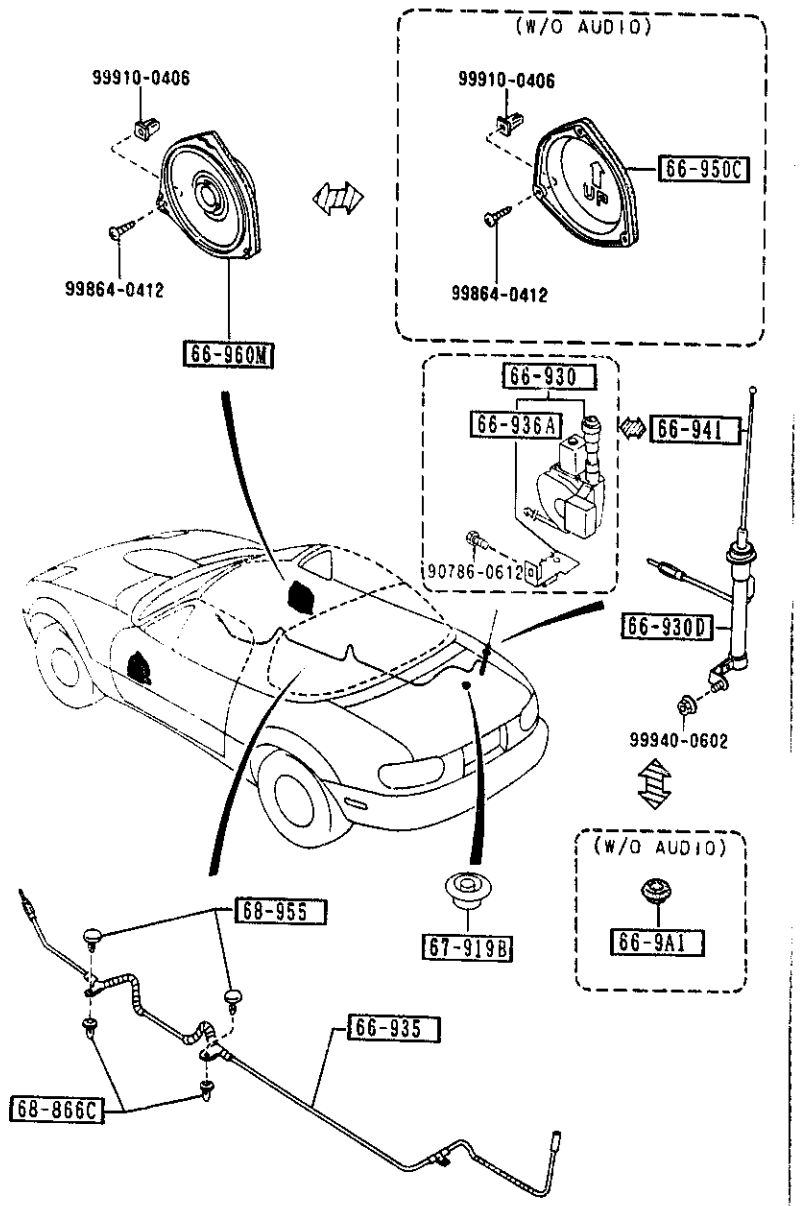

PART NO.	QTY	MODEL/RESTRICTION	MODEL/RESTRICTION	MODEL/RESTRICTION	FROM TO
66-9A1		COVER,HOLE-ANTENNA			
FB01-66-9A1A	1	BASE, (W/O AUDIO)			
66-930		ANTENNA,RADIO			
N007-66-930 A (N007-66-930A)	1				-1801
N007-66-930A	1	(W ELECT. ANTENNA)			1801-
66-930D		BODY,LOW-RADIO ANTENNA			
NA01-66-A3X	1	(W/MANUAL ANTENNA)			-1801
NA01-66-A3XA	1	(W/MANUAL ANTENNA)			1801-
66-935		FEEDER-ANTENNA			
NA01-66-940 A (NA01-66-940B)	1				-1801
NA01-66-940B AN(NA01-66-940C)	1				1801-1801
NA01-66-940C	1				1801-
66-936A		BRKT,MOTOR-ANTENA			
N007-66-A9X	1	(W/ELECT. ANTENNA)			
66-941		POLE,ANTENNA			
N001-66-A30	1	(W/MANUAL ANTENNA)			
66-950C		BRACKET,LOUD SPEAKER			
NA01-66-9B0A	2	BASE, (W/O AUDIO)			
66-960M		SPEAKER,DOOR			
NA03-66-96X	2	PKG-OPT, (W/AUDIO)			
67-919B		GROMMET			
N007-67-G11	1	(W/MANUAL ANTENNA) (W/O ANTENNA)			1801-
68-866C		FASTENER,SEAL			
B235-68-865A	2				
68-955		FASTENER,LIFT GATE TRIM			
GJ37-68-955	2				

1801 NA35**-300014
1801 NA35**-306993

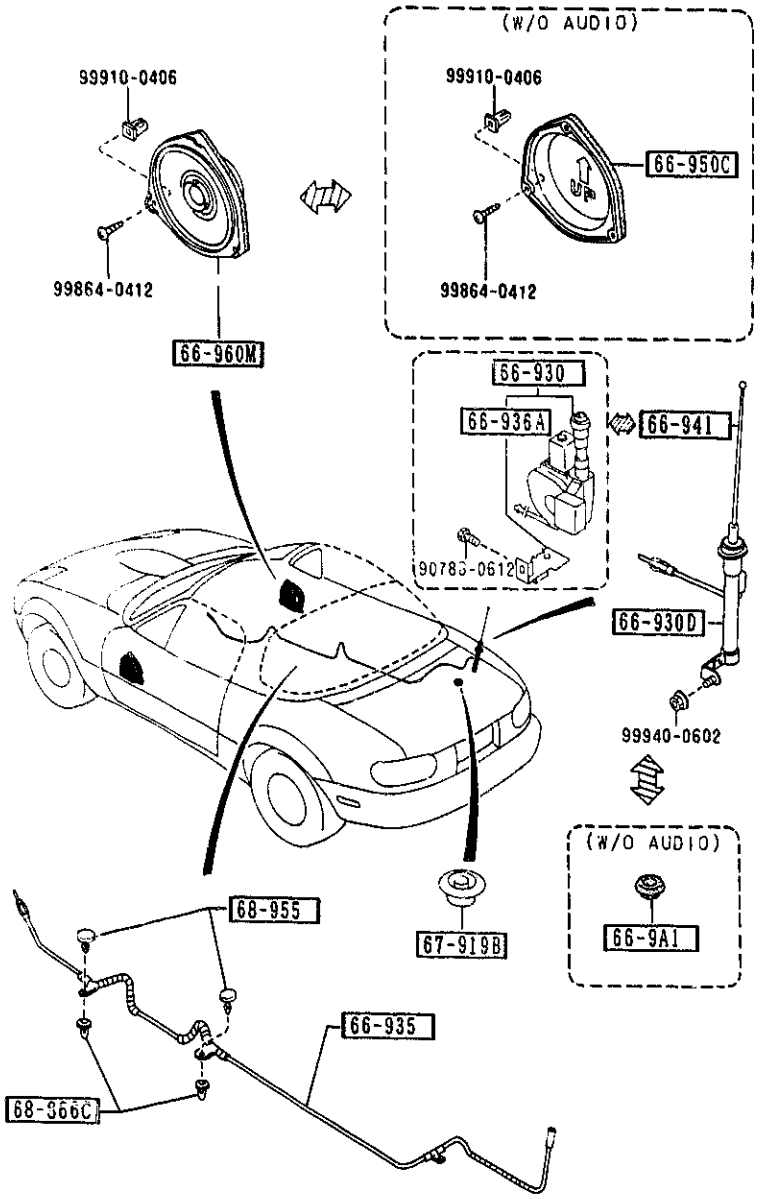

PART NO.	QTY	MODEL/RESTRICTION	MODEL/RESTRICTION	MODEL/RESTRICTION	FROM-TO
CONT'D					
00	INT-	NA0 NA1 NA2 BLACK			

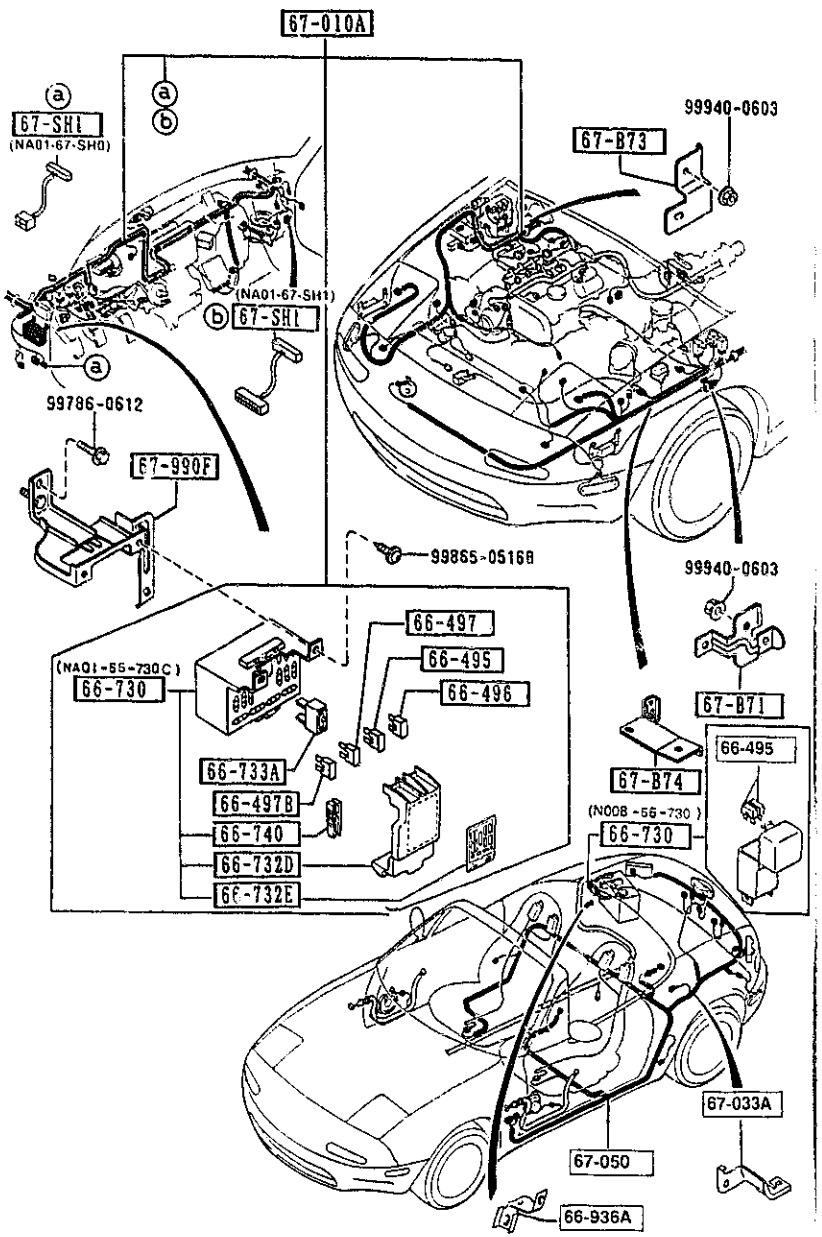

PART NO.	QTY	MODEL/RESTRICTION	MODEL/RESTRICTION	MODEL/RESTRICTION	FROM-TO
66-495		FUSE(10A)			
99705-1110	2				-1801
99705-1110	4				1801-
66-496		FUSE(15A)			
99705-1115	7				
66-497		FUSE(20A)			
99705-1120	1				
66-497B		FUSE(30A)			
99705-1130	1				
66-730		BLOCK,FUSE			
NA01-66-730C	1				
N008-66-730	1				1801-
66-732D		COVER,FUSE BLOCK			
NA01-66-731A	1	FURUKAWA			
66-732E		LABEL,CAUTION-FUSE COVER			
NA01-66-732A	1				
66-733A		BREAKER			
H001-66-733	1				
66-740		HOLDER,FUSE			
H001-66-739	1				
66-936A		BRKT,MOTOR-ANTENA			
N007-66-A9X	1	(W/O ANTENNA)			
67-B71		BRACKET,HARNESS			
NA05-67-BW1B	1				
67-B73		BRACKET,HARNESS			
NA05-67-BW2	1				
67-B74		BRACKET,HARNESS			
NA05-67-BW0A	1				

1801 NA35**-300014

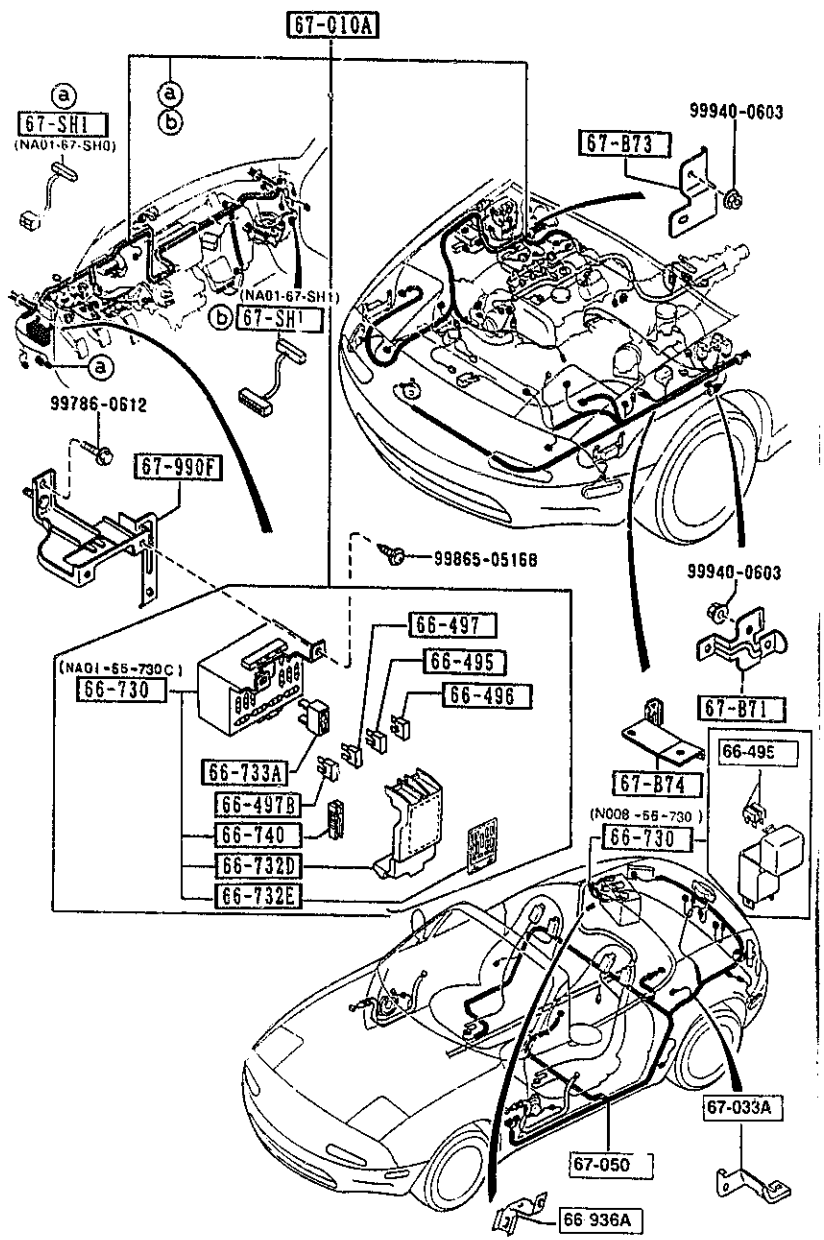

PART NO.	QTY	MODEL/RESTRICTION	MODEL/RESTRICTION	MODEL/RESTRICTION	FROM-TO
67-SH1		CORD,SHORT			
NA01-67-SH0	1	((AT))(W/O A.LOCK BRAKE))			
NA01-67-SH1	1	((MT))(W/O A.LOCK BRAKE))			
67-010A		HARNESS,FRONT			
NA23-67-010D AN(NA23-67-010E)	1				-0A01
NA25-67-010E AN(NA25-67-010F)	1				-0A01
NA04-67-010E AN(NA04-67-010F)	1				-1301
NA05-67-010E AN(NA05-67-010F)	1				-1301
NA03-67-010G	1	((AT))(W/O A.LOCK BRAKE))			-1801
NA23-67-010E AN(NA23-67-010F)	1				0A01-1301
NA25-67-010F	1	((AT))(A.LOCK BRAKE))			0A01-1801
NA04-67-010F	1	BASE, (W/O POWER WIND.) ((MT))(W/O A.LOCK BRAKE))			1301-1801
NA05-67-010F	1	PKG-OPT, V-SPECIAL, (W/POWER WIND.) ((MT))(W/O A.LOCK BRAKE))			1301-1801
NA23-67-010F	1	((MT))(A.LOCK BRAKE))			1301-1801
NA03-67-010K	1	((AT))(W/O A.LOCK BRAKE))			1801-
NA04-67-010J	1	BASE, (W/O POWER WIND.) ((MT))(W/O A.LOCK BRAKE))			1801-
NA05-67-010J	1	PKG-OPT, V-SPECIAL, (W/POWER WIND.) ((MT))(W/O A.LOCK BRAKE))			1801-
NA23-67-010J	1	((MT))(A.LOCK BRAKE))			1801-
NA25-67-010J	1	((AT))(A.LOCK BRAKE))			1801-
67-033A		BRACKET,WIRING			
N007-67-B10A	1				

0A01 NA35**-213219
1301 NA35**-231464
1801 NA35**-300014

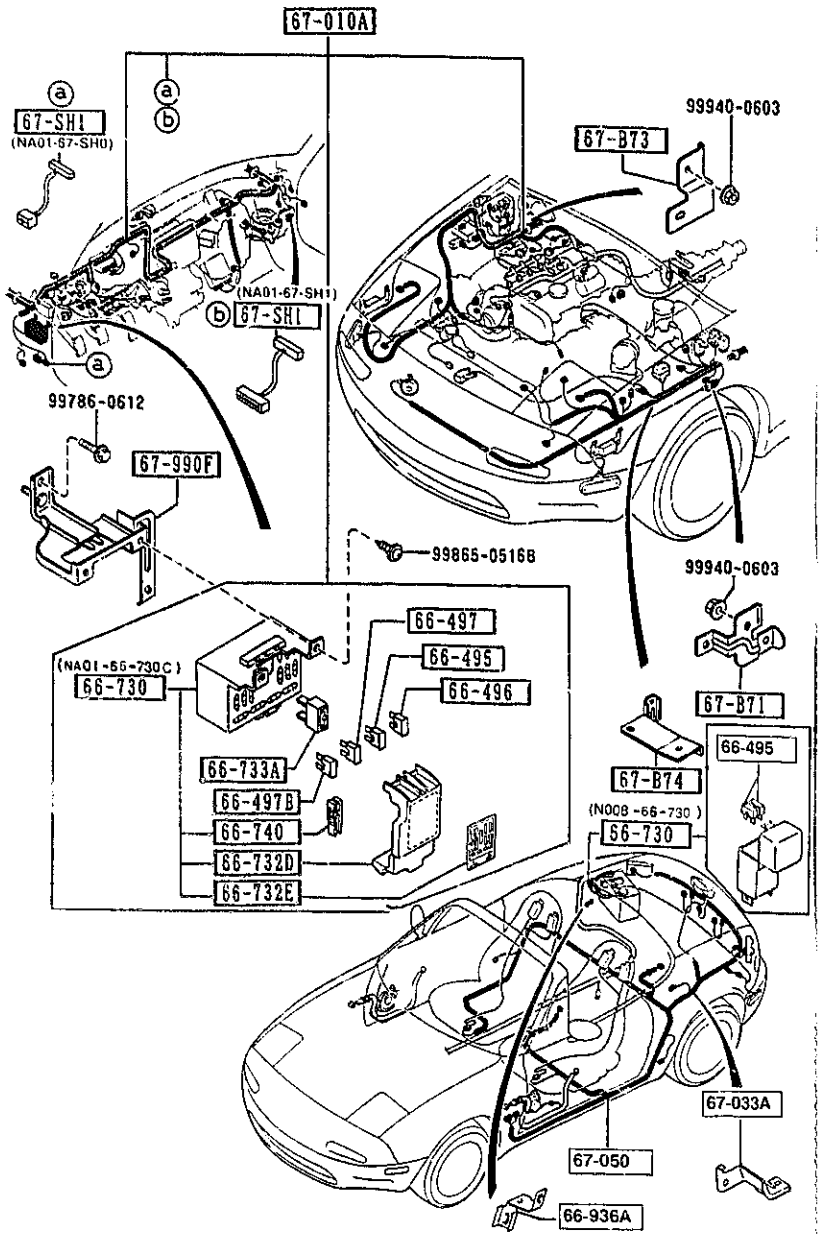

PART NO.	QTY	MODEL/RESTRICTION	MODEL/RESTRICTION	MODEL/RESTRICTION	FROM-TO
67-050		HARNESS,REAR			
NA23-67-050A AN(NA23-67-050B)	1				-0A01
NA01-67-050E	1	BASE, (W/O HEAD SPEAKER) (W/O A.LOCK BRAKE)			-1801
NA02-67-050E	1	PKG-OPT, (W/HEAD SPEAKER) (W/O A.LOCK BRAKE)			-1801
NA23-67-050B	1	(A.LOCK BRAKE)			0A01-1801
NA01-67-050H AN(NA01-67-050J)	1				1801-1C01
NA02-67-050H AN(NA02-67-050J)	1				1801-1C01
NA23-67-050E AN(NA23-67-050F)	1				1801-1C01
NA01-67-050J	1	BASE, (W/O HEAD SPEAKER) (W/O A.LOCK BRAKE)			1C01-
NA02-67-050J	1	PKG-OPT, (W/HEAD SPEAKER) (W/O A.LOCK BRAKE)			1C01-
NA23-67-050F	1	(A.LOCK BRAKE)			1C01-
67-990F		BRACKET,HARNESS			
NA01-67-BJ0	1				

0A01 NA35**-213219
1801 NA35**-300014
1C01 NA35**-309801

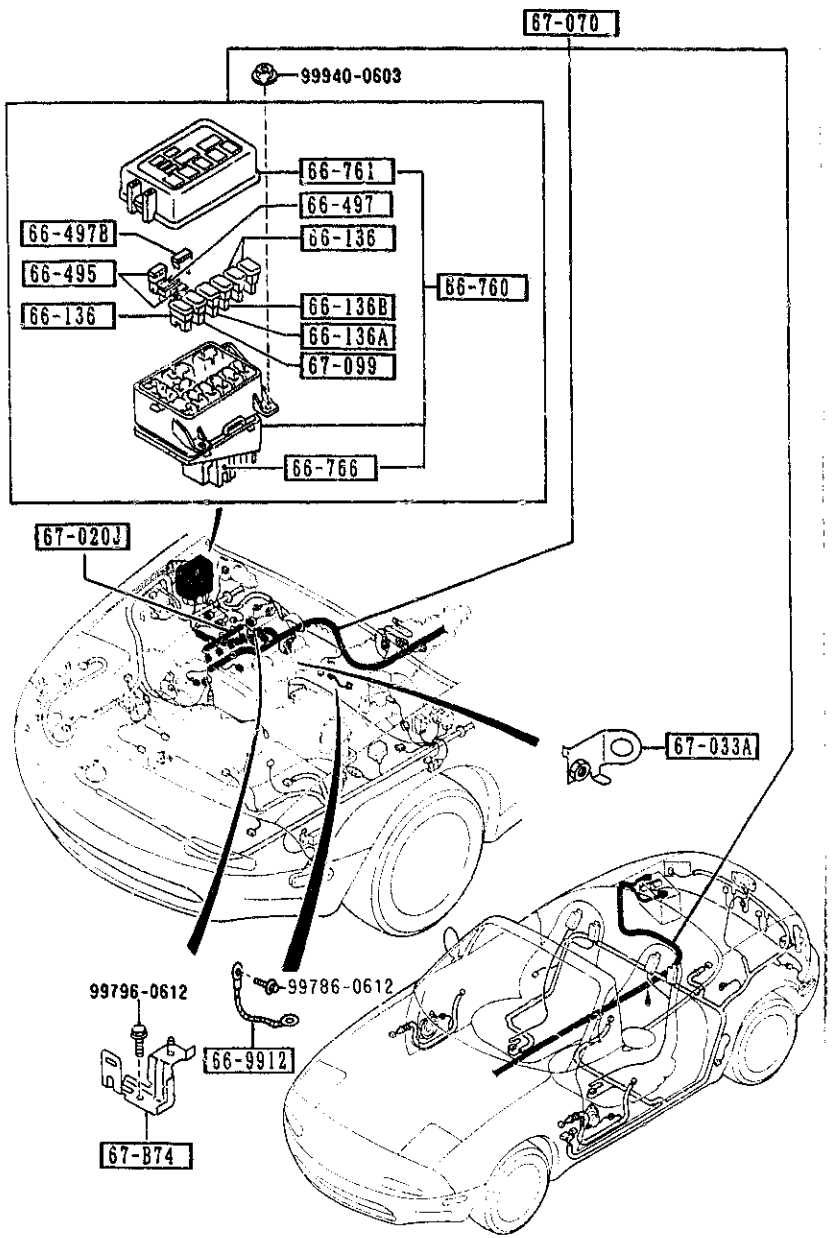

PART NO.	QTY	MODEL/RESTRICTION	MODEL/RESTRICTION	MODEL/RESTRICTION	FROM-TO
66-136		FUSE(30A)			
H115-67-099	3				
66-136A		FUSE(40A)			
H116-67-099	1				
66-136B		FUSE(80A)			
H117-67-099	1				
66-495		FUSE(10A)			
99705-1110	2				
66-497		FUSE(20A)			
99705-1120	1				
66-497B		FUSE(30A)			
99705-1130	1				
66-760		BLOCK,MAIN FUSE			
NA01-66-7608	1	(W/O A.LOCK BRAKE)			
NA23-66-760	1	(A.LOCK BRAKE)			
66-761		COVER,MAIN FUSE BLOCK YAZAKI			
NA02-66-762B	1	(W/O A.LOCK BRAKE)			
NA23-66-762	1	(A.LOCK BRAKE)			
66-766		COVER,UNDER-MAIN FUSE BLK			
B465-66-767	1				
66-9912		WIRE,EARTH			
NA01-67-EW1B	1				
67-B74		BRACKET,HARNESS			
NA01-67-B80A	1				
67-020J		HARNESS,INJECTOR			
NA01-67-080C	1				
67-033A		BRACKET,WIRING			
NA01-67-B10B	1				

6701 -2 * WIRING HARNESSES(ENGINE & T/MISSION)

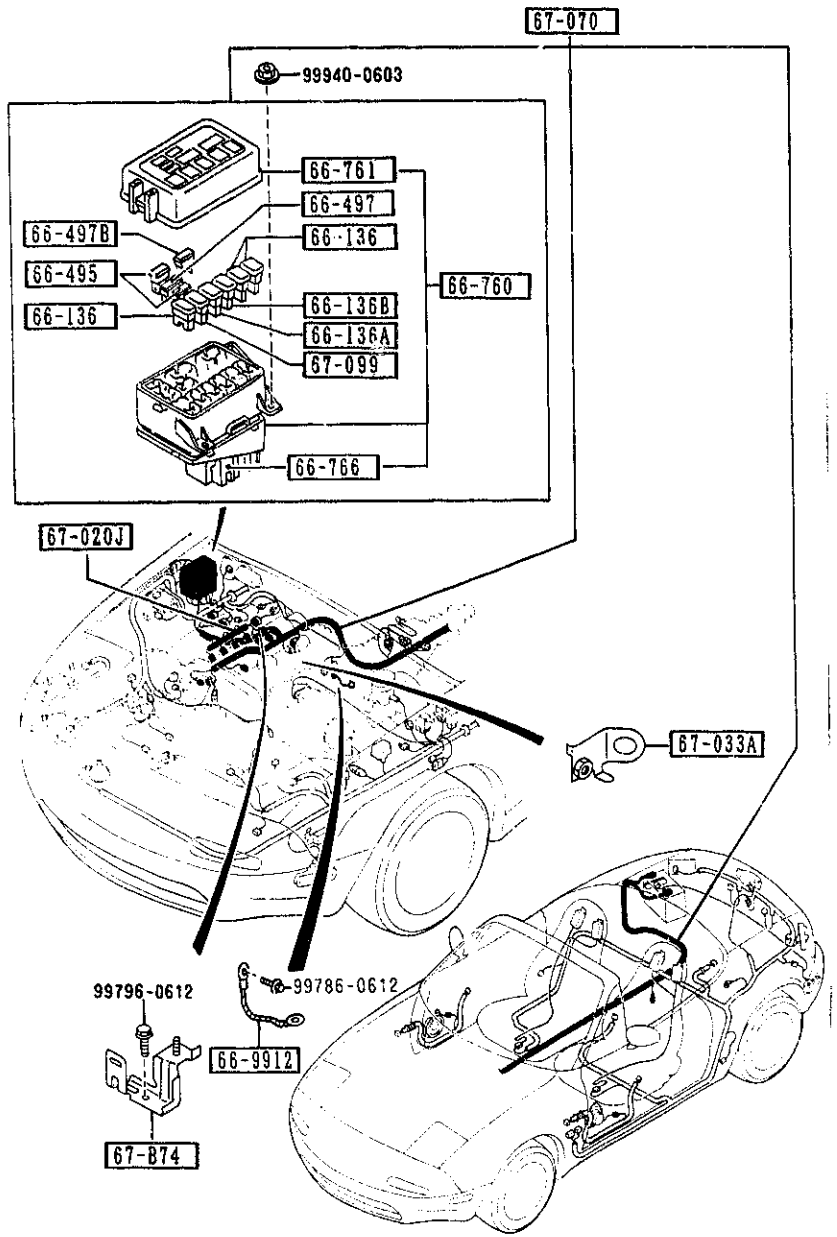

PART NO.	QTY	MODEL/RESTRICTION	MODEL/RESTRICTION	MODEL/RESTRICTION	FROM-TO
67-070		HARNESS,ENGINE			
NA01-67-070K	1	((MT))(W/O A.LOCK BRAKE))			-1801
NA03-67-070D	1	((AT))(W/O A.LOCK BRAKE))			-1801
NA23-67-070B	1	((MT))(A.LOCK BRAKE))			-1801
NA25-67-070B	1	((AT))(A.LOCK BRAKE))			-1801
NA01-67-070L	1	((MT))(W/O A.LOCK BRAKE))			1801-
NA03-67-070E	1	((AT))(W/O A.LOCK BRAKE))			1801-
NA23-67-070D	1	((MT))(A.LOCK BRAKE))			1801-
NA25-67-070D	1	((AT))(A.LOCK BRAKE))			1801-
67-099		LINK,FUSIBLE			
FB01-67-099	1	60A			

1801 NA35**-300014

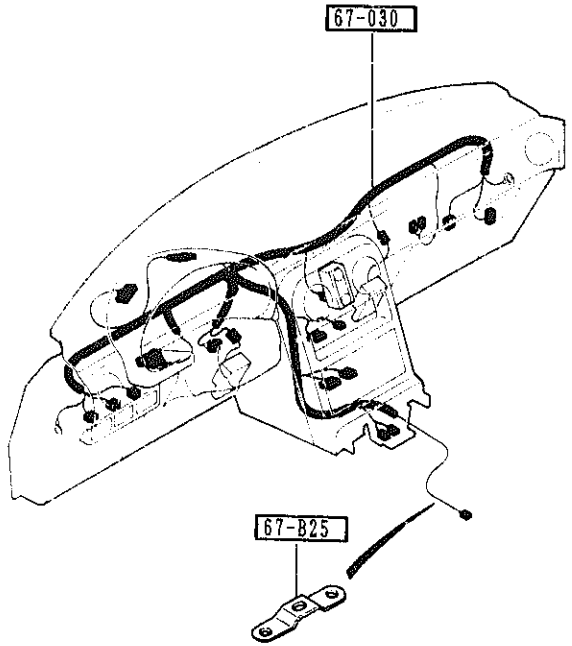

AUNA02

6702 -1 * WIRING HARNESSES(DASHBOARD)

PART NO.	QTY	MODEL/RESTRICTION	MODEL/RESTRICTION	MODEL/RESTRICTION	FROM TO
67-B25		BRACKET,HARNESS			
NA01-67-B31	1	(MT)			
67-030		HARNESS,INSTRUMENT			
NA23-67-030A	1	(MT)			-1801
NA25-67-030B	1	(AT)			-1801
NA01-67-030N	1	((MT))(W/O A.LOCK BRAKE))			1801-
NA02-67-030N	1	((MT))(A.LOCK BRAKE))			1801-
NA03-67-030G	1	(AT)			1801-

1801 NA35**-300014

CAT. AUNA02-07

1993-12

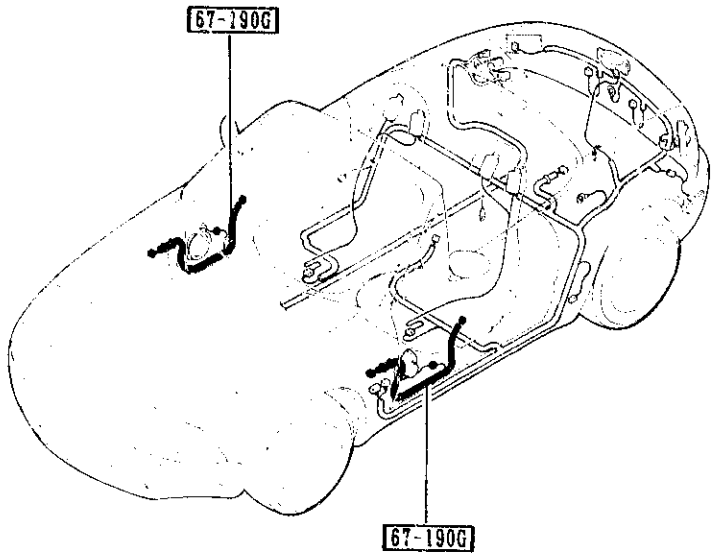

PART NO.	QTY	MODEL/RESTRICTION	MODEL/RESTRICTION	MODEL/RESTRICTION	FROM-10
67-190G		HARNESS,DOOR			
NA01-67-190A	2	BASE, (W/O POWER WIND.)			
NA02-67-190A	2	PKG-OPT, V-SPECIAL, (W/POWER WIND.)			