Parts Catalog

Mazda MX-5 MIATA
U.S.A.
('91►'92)

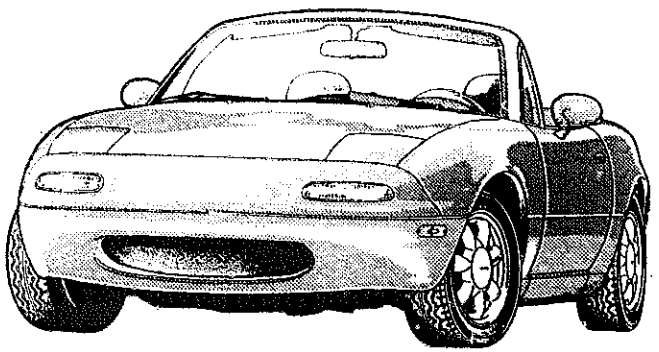

NA35**-200001-350000

Jan.'94 (FINAL)

Catalog No. AU-NA02-E7

mazda

©1994 Mazda Motor Corporation

LAYOUT OF CONTENTS / DISPOSITION TYPOGRAPHIQUE DE CONTENU / DISPOSICION DEL CONTENIDO / ANORDNUNG DES INHALTS

- The following is a typical example of the layout of contents on Mazda microfiche parts catalog.
- Voici un exemple typique de la disposition typographique de contenu dans les microfiches de catalogue des pièces de Mazda.
- El siguiente es un ejemplo típico de la disposición del contenido en una microficha del catálogo de repuestos de Mazda.
- Folgendes ist ein typisches Beispiel der Inhaltsanordnung des Mazda-Mikrofiche-Teilekataloges.

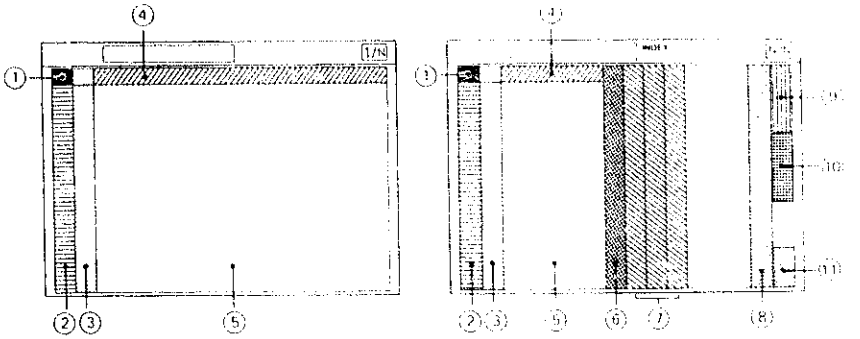

Remark : The items listed under ④ have been deleted from each fiche since Dec. '93

① · Layout of contents
· Disposition Typographique de Contenu
· Disposición del contenido
· Anordnung des Inhalts

② · Pictorial Index
· Index par Schémas
· Indice Gráfico
· Illustrierter Index

③ · Master Section No. Index
· Index des Numéros des Sections Totale
· Indice del Número de la Sección Maéstra
· Hauptabschnitssnummer-Index

~~④ · Section No. Index for the Column~~
~~· Index des Numéros des Sections pour les Colonnes~~
~~· N° de la Sección para el Indice~~
~~· Abschnitssnummer-Index für die Spalte~~

⑤ · Illustration & Text
· Illustrations et Textes
· Ilustración y Texto
· Abbildung und Text

⑥ · Part No. Index
· Index des Numéros des Pièces
· Indice del N° de Pieza
· Teile-Nr.-Index

⑦ · Alphabetical Index
· Index Alphabétique
· Indice Alfabético
· Alphabetischer Index

⑧ · Model Identification
· Identification des Modèles
· Identificación del Modelo
· Modell-Kennzeichnung

⑨ · Vehicle Identification System
· Système d'Identification de Véhicule
· Sistema de Identification de Vehiculo
· Fahrzeug-Identifikationssystem

PICTORIAL INDEX

ENGINE (1/2)

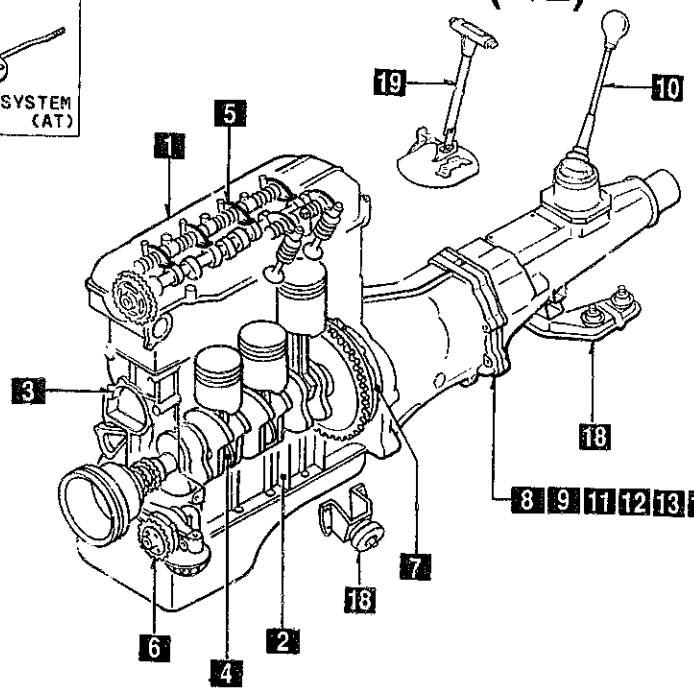

As this illustration is prepared to be applicable to all models, some parts are different in specifications from the parts listed in this parts Catalog.

1000 SHORT ENGINE & GASKET SETS

1 1010 CYLINDER HEAD & COVER

2 1030 CYLINDER BLOCK

3 1040 OIL PAN & TIMING COVER

4 1100 PISTON, CRANKSHAFT & FLYWHEEL

5 1200 VALVE SYSTEM

19 4600 CHANGE CONTROL SYSTEM (AT)

6 1400 OIL PUMP & FILTER

18 3900 ENGINE & T/MISSION MOUNTINGS

7 1600 CLUTCH DISC & COVER (MANUAL)

17 1960 GASKET & SEAL KIT (AUTOMATIC)

8 1700 TRANSMISSION CASE (MANUAL)

16 1950 MANUAL LINKAGE SYSTEM (AUTOMATIC)

9 1710 TRANSMISSION GEARS (MANUAL)

15 1940 GOVERNOR, LOW & REVERSE PISTON (AUTOMATIC)

14 1930 CLUTCHES & PLANETARY GEARS (AUTOMATIC)

13 1925 CONTROL VALVE (AUTOMATIC)

12 1920 TRANSMISSION CASE & MAIN CONTROL SYSTEM (AUTOMATIC)

11 1910 TORQUE CONVERTER, OIL PUMP & PIPINGS (AUTOMATIC)

10 1720 CHANGE CONTROL SYSTEM (MANUAL)

PICTORIAL INDEX

1 1300  INLET MANIFOLD	2 1310  EXHAUST MANIFOLD	3 1320 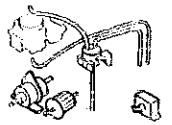 FUEL SYSTEM	4 1325  FUEL DISTRIBUTOR	5 1330 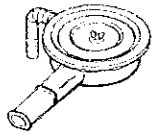 AIR CLEANER	6 1364 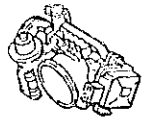 THROTTLE BODY
	ENGINE (2/2) 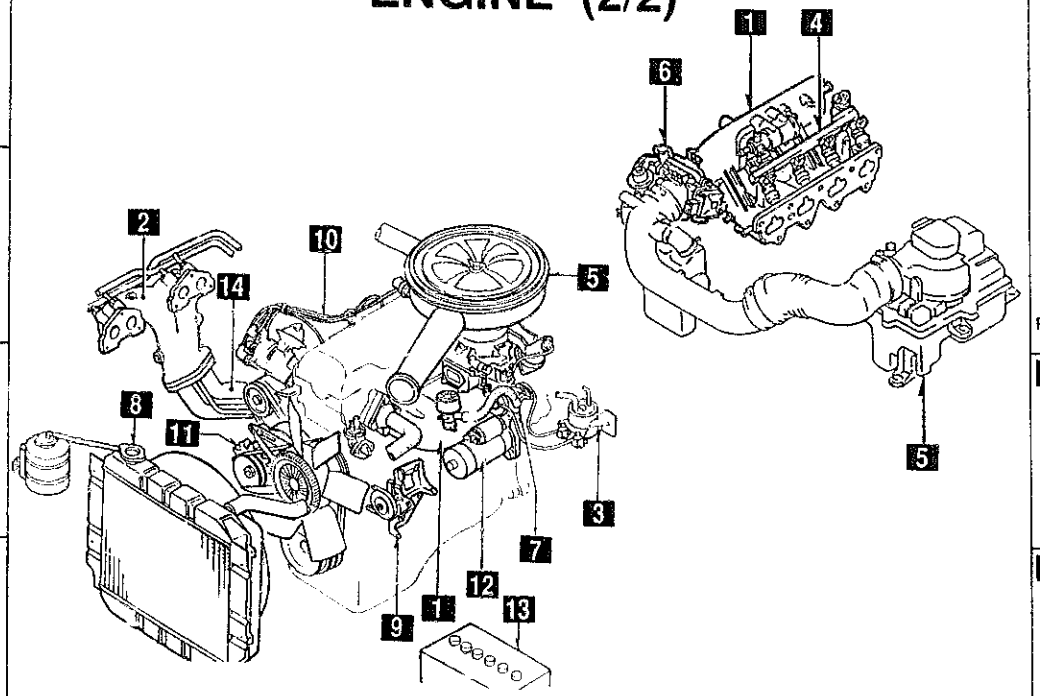				7 1370 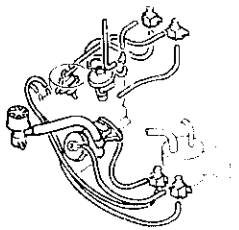 EMISSION CONTROL SYSTEM (INLET SIDE)
					8 1500 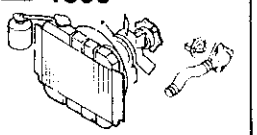 COOLING SYSTEM
					S 1580 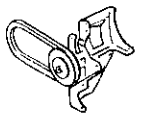 BRACKET, PULLEY & BELT
14 4000 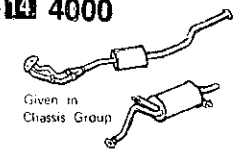 Given in Chassis Group EXHAUST SYSTEM	13 1850 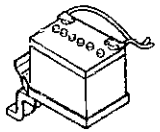 BATTERY	12 1840 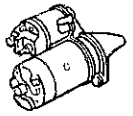 STARTER	11 1830 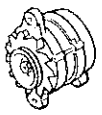 ALTERNATOR	10 1800 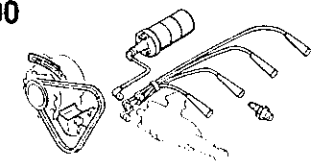 ENGINE ELECTRICAL SYSTEM	

As this illustration is prepared to be applicable to all models, some parts are different in specifications from the parts listed in this parts Catalog.

PICTORIAL INDEX

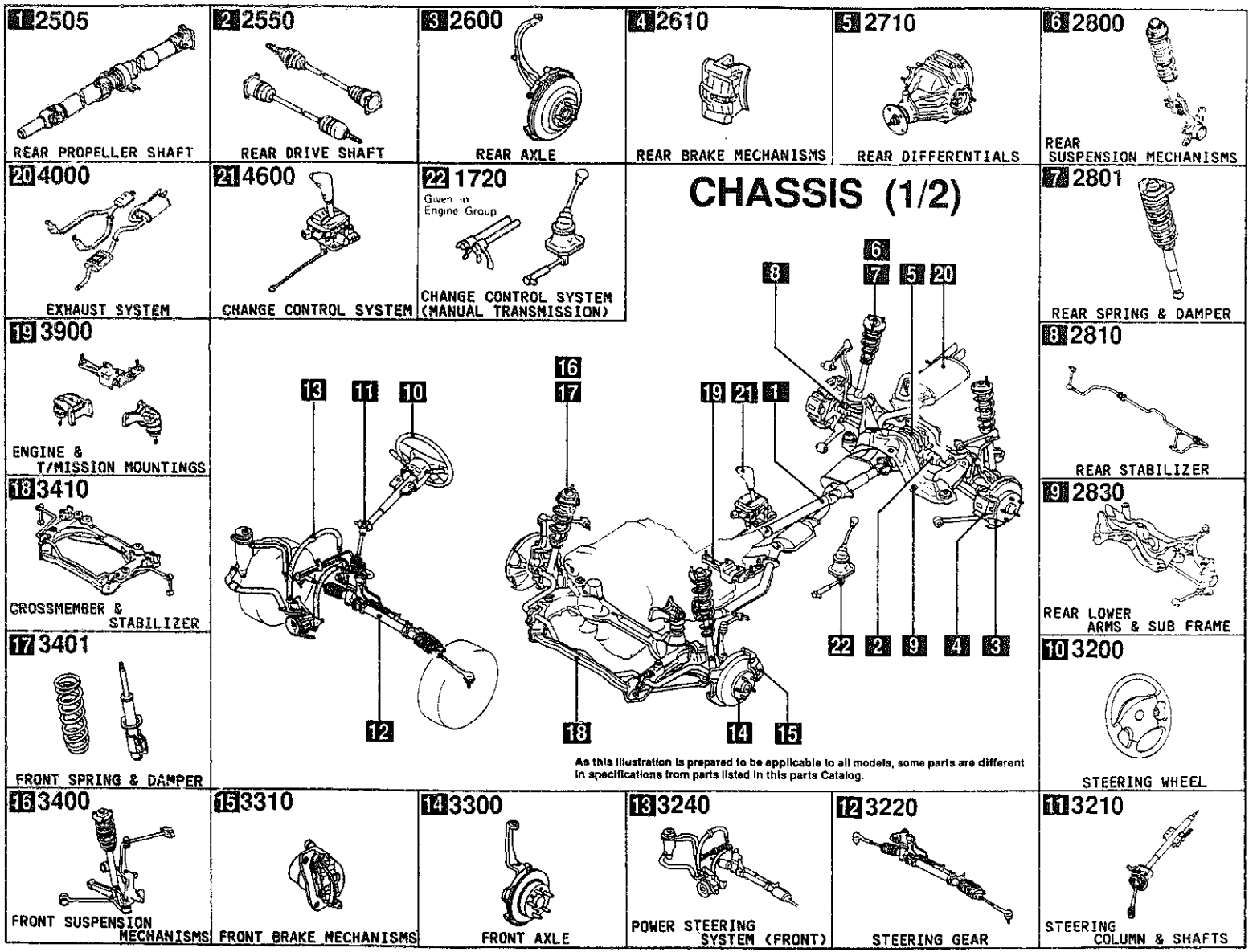

PICTORIAL INDEX

1 3700 TIRES & JACK

2 4140 CLUTCH RELEASE & MASTER CYLINDERS

3 4145 CLUTCH PIPINGS

4 4160 ACCELERATOR CONTROL SYSTEM

5 4200 FUEL TANK

6 4210 FUEL LID OPENER

CHASSIS (2/2)

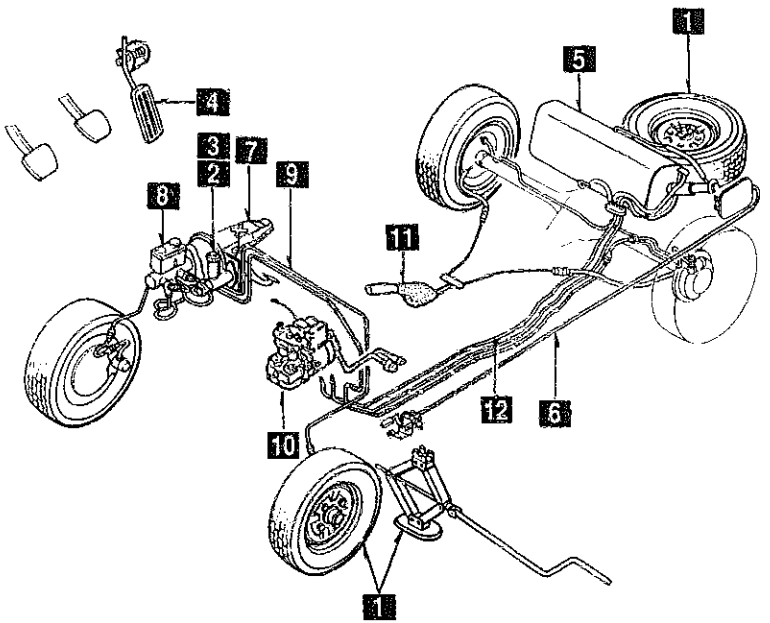

As this illustration is prepared to be applicable to all models, some parts are different in specifications from parts listed in this parts Catalog.

7 4300 CLUTCH & BRAKE PEDALS

8 4340 BRAKE MASTER CYLINDER & POWER BRAKE

9 4360 BRAKE PIPINGS

10 4370 ANTILOCK BRAKE SYSTEM

12 4500 FUEL PIPINGS

11 4400 PARKING BRAKE SYSTEM

PICTORIAL INDEX

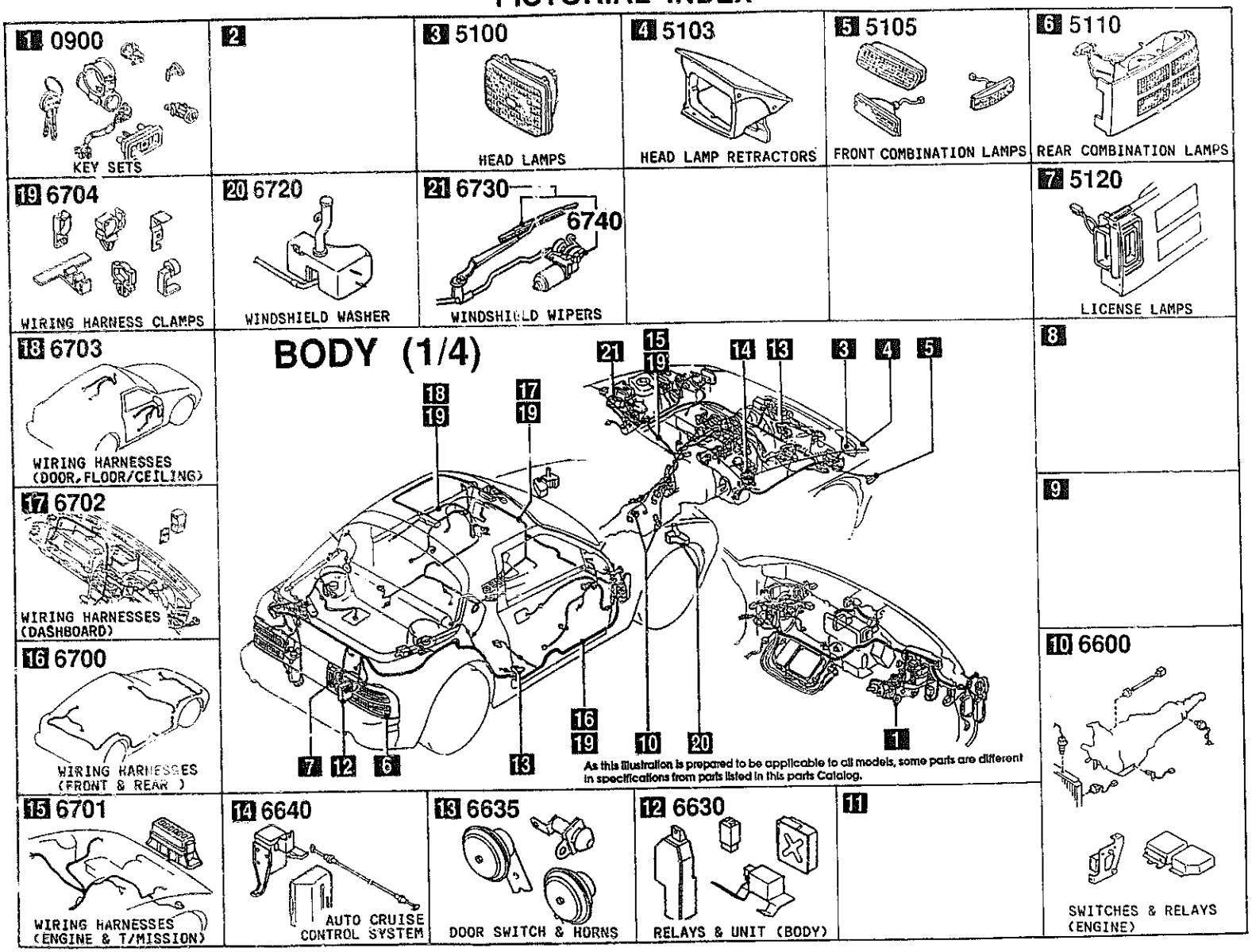

PICTORIAL INDEX

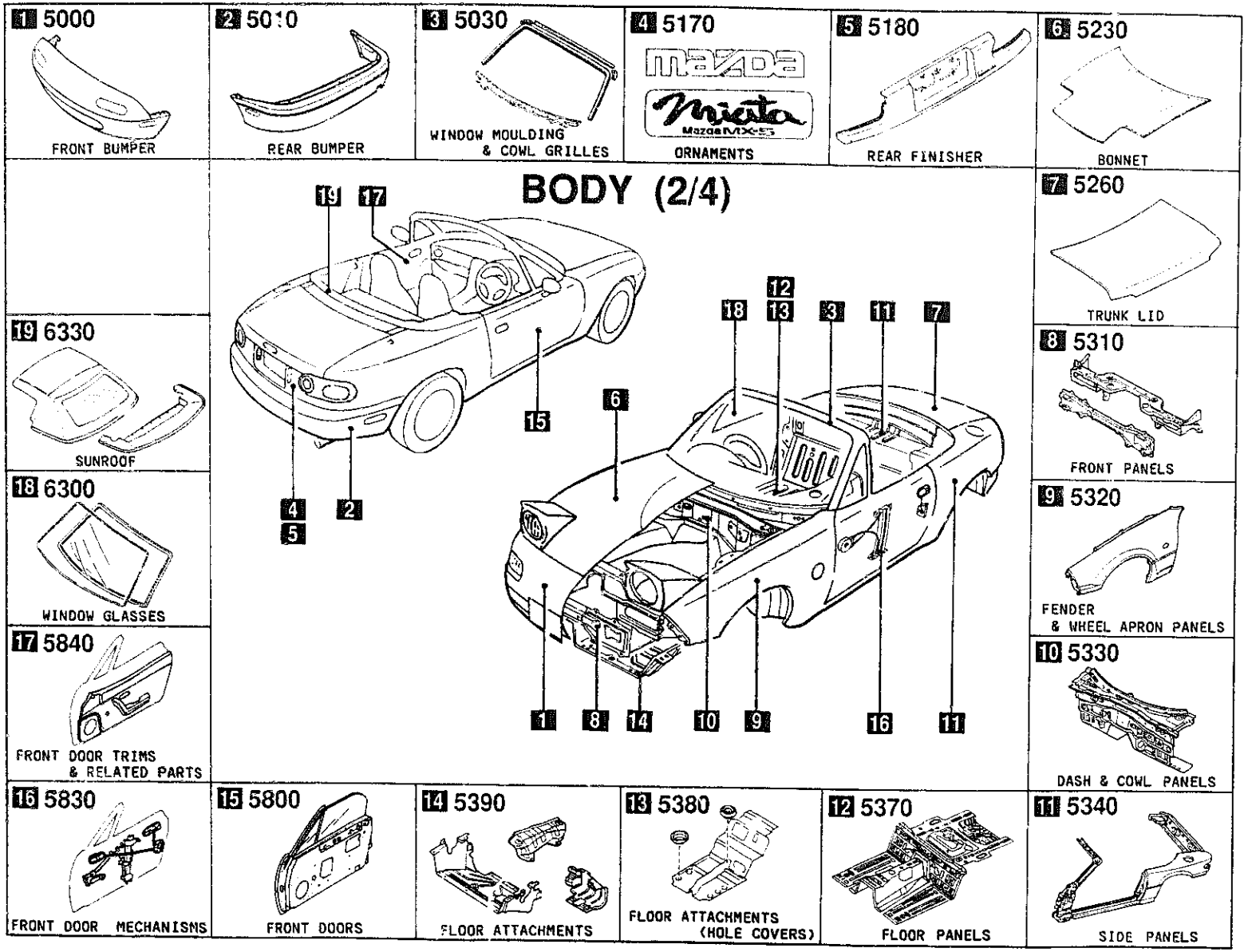

PICTORIAL INDEX

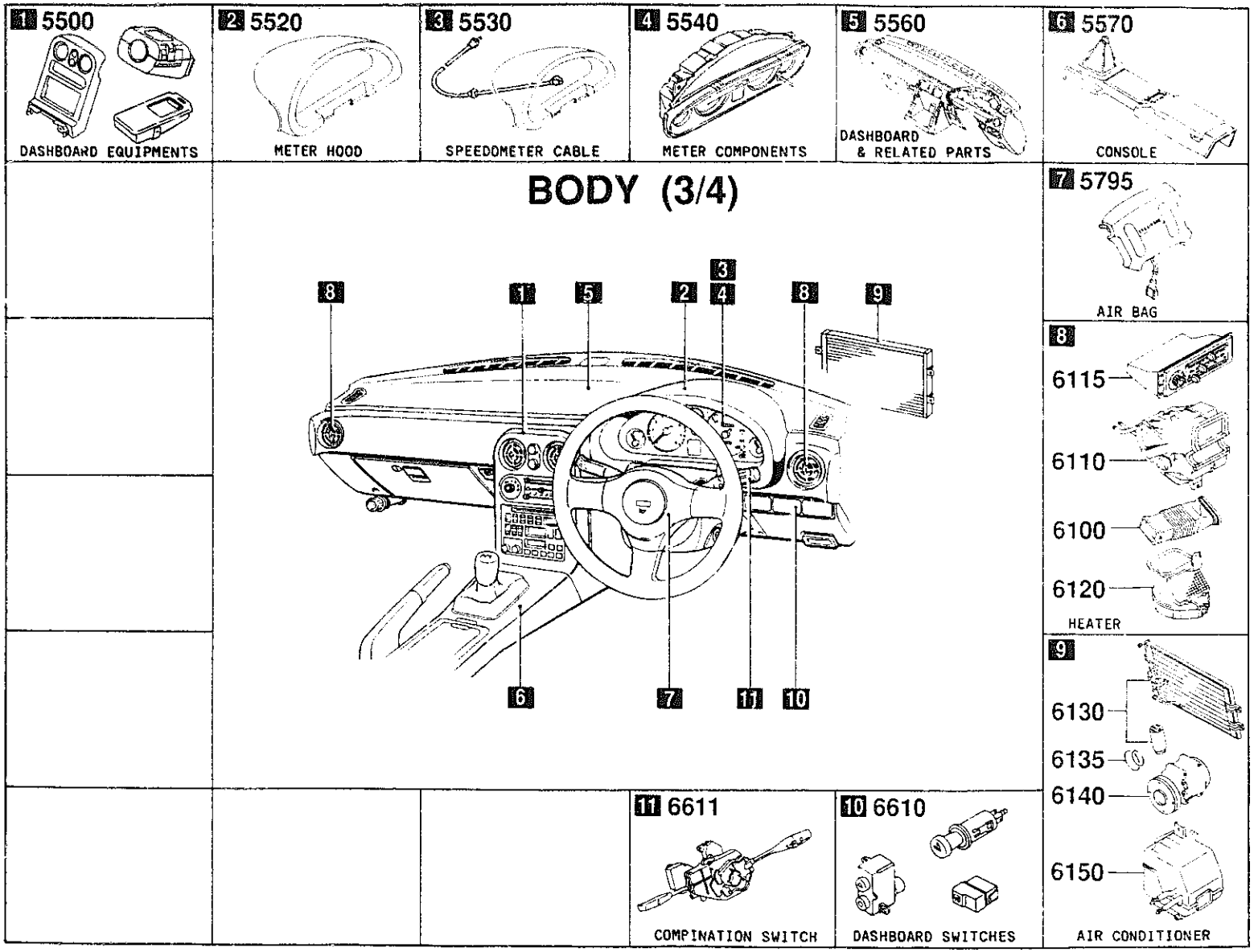

PICTORIAL INDEX

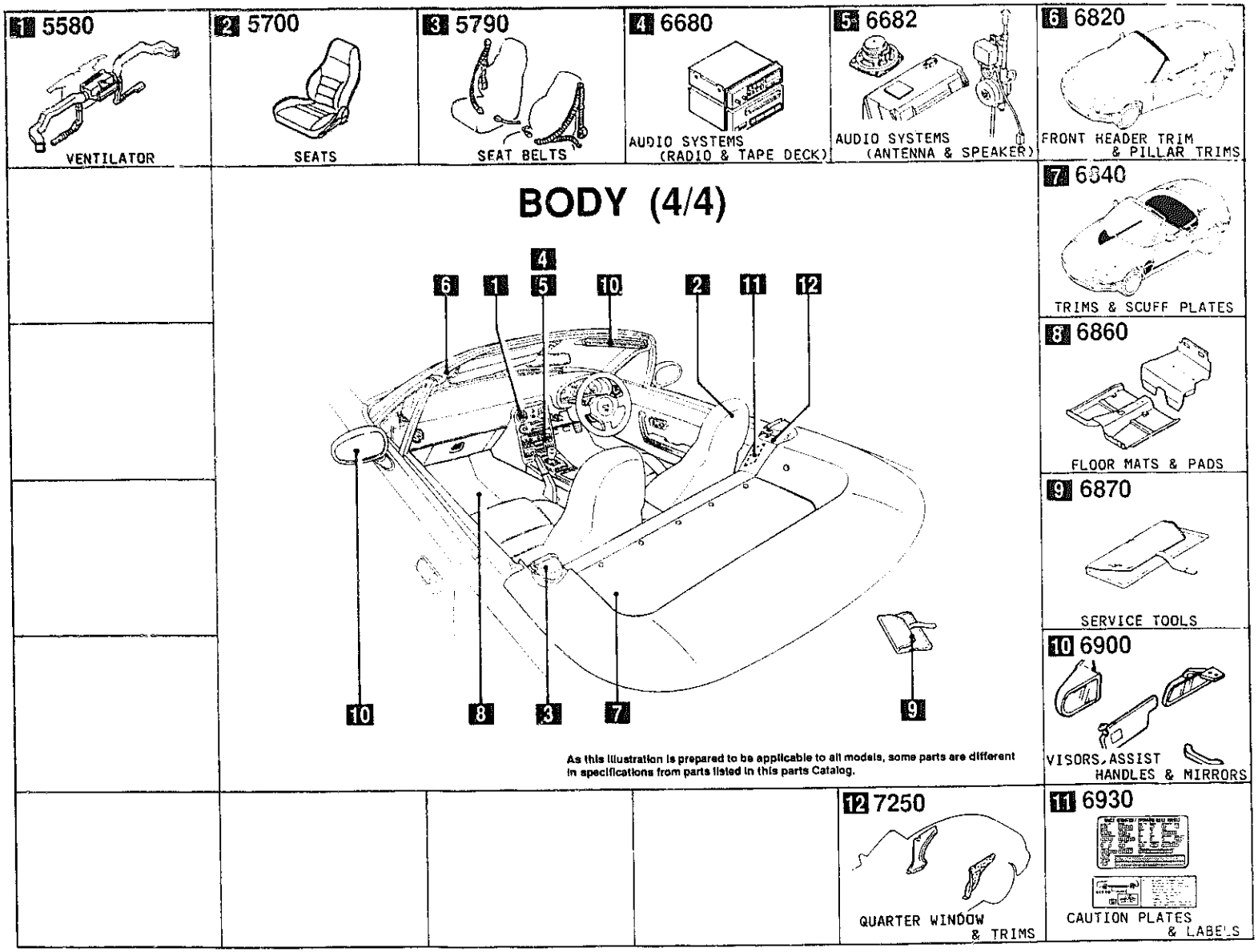

SECTION NAME INDEX (ENGINE)

LO.NO	SEC.NO	SECTION NAME	LO.NO	SEC.NO	SECTION NAME	LO.NO	SEC.NO	SECTION NAME
1-C03	1000	ENGINE & GASKET SETS						
1-D03	1010	CYLINDER HEAD & COVER						
1-G03	1030	CYLINDER BLOCK						
1-I03	1040	OIL PAN & TIMING COVER						
1-K03	1100	PISTON,CRANKSHAFT & FLYWHEEL						
1-N03	1200	VALVE SYSTEM						
1-D04	1300	INLET MANIFOLD						
1-E04	1310	EXHAUST MANIFOLD						
1-F04	1320	FUEL SYSTEM						
1-H04	1325	FUEL DISTRIBUTOR						
1-I04	1330	AIR CLEANER						
1-K04	1364	THROTTLE BODY						
1-L04	1370	EMISSION CONTROL SYSTEM (INLET SIDE)						
1-M04	1400	OIL PUMP & FILTER						
1-C05	1500	COOLING SYSTEM						
1-G05	1580	BRACKET,PULLEY & BELT						
1-C06	1600	CLUTCH DISC & COVER (MANUAL)						
1-D06	1700	TRANSMISSION CASE (MANUAL)						
1-E06	1710	TRANSMISSION GEARS(MANUAL)						
1-K06	1720	CHANGE CONTROL SYSTEM (MANUAL)						
1-N06	1800	ENGINE ELECTRICAL SYSTEM						
1-D07	1830	ALTERNATOR						
1-G07	1840	STARTER						
1-I07	1850	BATTERY						
1-J07	1910	TORQUE CONVERTER,OIL PUMP & PIPINGS (AUTOMATIC)						
1-M07	1920	TRANSMISSION CASE & MAIN CONTROL SYSTEM (AUTOMATIC)						
1-G08	1925	CONTROL VALVE (AUTOMATIC)						
1-K08	1930	CLUTCHES & PLANETARY GEARS (AUTOMATIC)						
1-F09	1940	GOVERNOR, LOW & REVERSE PISTON (AUTOMATIC)						
1-I09	1950	MANUAL LINKAGE SYSTEM (AUTOMATIC)						
1-K09	1960	GASKET & SEAL KIT (AUTOMATIC)						

CATLOG-NO= AUNA02-07

DATE. 1993-12

SECTION NAME INDEX (CHASSIS)

LO.NO	SEC.NO	SECTION NAME	LO.NO	SEC.NO	SECTION NAME	LO.NO	SEC.NO	SECTION NAME
1-C11	2505	REAR PROPELLER SHAFT	1-H16	4360	BRAKE PIPINGS			
1-D11	2550	REAR DRIVE SHAFT	1-L16	4370	ANTILOCK BRAKE SYSTEM			
1-E11	2600	REAR AXLE	2-C03	4400	PARKING BRAKE SYSTEM			
1-G11	2610	REAR BRAKE MECHANISMS	2-E03	4500	FUEL PIPINGS			
1-I11	2710	REAR DIFFERENTIALS (NORMAL DIFF.)	2-G03	4600	CHANGE CONTROL SYSTEM (AT)			
1-N11	2710 A	REAR DIFFERENTIALS (LIMITED SLIP DIFF.)						
1-G12	2800	REAR SUSPENSION MECHANISMS						
1-H12	2801	REAR SPRING & DAMPER						
1-I12	2810	REAR STABILIZER						
1-J12	2830	REAR LOWER ARMS & SUB FRAME						
1-L12	3200	STEERING WHEEL						
1-M12	3210	STEERING COLUMN & SHAFTS						
1-N12	3220	STEERING GEAR (W/O POWER STEERING)						
1-D13	3220 A	STEERING GEAR (W/ POWER STEERING)						
1-G13	3240	POWER STEERING SYSTEM						
1-I13	3300	FRONT AXLE						
1-J13	3310	FRONT BRAKE MECHANISMS						
1-L13	3400	FRONT SUSPENSION MECHANISMS						
1-N13	3401	FRONT SPRING & DAMPER						
1-C14	3410	CROSSMEMBER & STABILIZER						
1-D14	3700	TIRES & JACK						
1-C15	3900	ENGINE & T/MISSION MOUNTINGS						
1-D15	4000	EXHAUST SYSTEM						
1-F15	4140	CLUTCH RELEASE & MASTER CYLINERS (MANUAL TRANSMISSION)						
1-G15	4145	CLUTCH PIPINGS (MANUAL TRANSMISSION)						
1-H15	4160	ACCELERATOR CONTROL SYSTEM						
1-I15	4200	FUEL TANK						
1-L15	4210	FUEL LID OPENER						
1-M15	4300	CLUTCH & BRAKE PEDALS (MANUAL TRANSMISSION)						
1-D16	4300A	BRAKE PEDALS (AUTOMATIC TRANSMISSION)						
1-F16	4340	BRAKE MASTER CYLINDER & POWER BRAKE						

CATLOG-NO= AUNA02-07

DATE. 1993-12

SECTION NAME INDEX (BODY)

LO.NO	SEC.NO	SECTION NAME
2-C05	0900	KEY SETS
2-F05	5000	FRONT BUMPER
2-I05	5010	REAR BUMPER
2-K05	5030	WINDOW MOULDING & COWL GRILLES
2-L05	5100	HEAD LAMPS
2-M05	5103	HEAD LAMP RETRACTORS
2-D06	5105	FRONT COMBINATION LAMPS
2-F06	5110	REAR COMBINATION LAMPS
2-I06	5120	LICENSE LAMPS
2-J06	5170	ORNAMENTS
2-K06	5180	REAR FINISHER
2-M06	5230	BONNET
2-C07	5260	TRUNK LID
2-E07	5310	FRONT PANELS
2-F07	5320	FENDER & WHEEL APRON PANELS
2-I07	5330	DASH & COWL PANELS
2-J07	5340	SIDE PANELS
2-C08	5370	FLOOR PANELS
2-F08	5380	FLOOR ATTACHMENTS (HOLE COVERS)
2-G08	5390	FLOOR ATTACHMENTS
2-C09	5500	DASHBOARD EQUIPMENTS
2-E09	5520	METER HOOD
2-F09	5530	SPEEDOMETER CABLE
2-G09	5540	METER COMPONENTS
2-J09	5560	DASHBOARD & RELATED PARTS
2-M09	5570	CONSOLE
2-E10	5580	VENTILATOR
2-G10	5700	SEATS
2-E11	5790	SEAT BELTS
2-F11	5795	AIR BAG
2-G11	5800	FRONT DOORS
2-J11	5830	FRONT DOOR MECHANISMS
2-N11	5840	FRONT DOOR TRIMS & RELATED PARTS
2-C13	6100	HEATER
2-D13	6110	HEATER UNIT COMPONENTS
2-E13	6115	HEATER CONTROLS COMPONENTS
2-G13	6120	HEATER BLOWER COMPONENTS
2-H13	6130	AIR CONDITIONER
2-L13	6135	O RING SET,PIPING
2-M13	6140	COMPRESSOR COMPONENTS (AIR CONDITIONER)
2-C14	6150	COOLING UNIT (AIR CONDITIONER)
2-D14	6300	WINDOW GLASSES
2-E14	6330	SUNROOF
2-E15	6600	SWITCHES & RELAYS (ENGINE)
2-I15	6610	DASHBOARD SWITCHES
2-J15	6611	COMBINATION SWITCH
2-K15	6630	RELAYS & UNIT (BODY)
2-M15	6635	DOOR SWITCH & HORNS
2-N15	6640	AUTO CRUISE CONTROL SYSTEM
2-C16	6680	AUDIO SYSTEMS (RADIO & TAPE DECK)
2-E16	6682	AUDIO SYSTEMS (ANTENNA & SPEAKER)
2-G16	6700	WIRING HARNESSES(FRONT & REAR)
2-J16	6701	WIRING HARNESSES(ENGINE & T/MISSION)
2-L16	6702	WIRING HARNESSES(DASHBOARD)
2-M16	6703	WIRING HARNESSES(DOOR,FLOOR/CEILING)
3-C03	6704	WIRING HARNESS CLAMPS
3-F03	6720	WINDSHIELD WASHER
3-K03	6730	WINDSHIELD WIPERS
3-M03	6740	WIPER MOTOR COMPONENTS(FRONT)
3-N03	6820	FRONT HEADER TRIM & PILLAR TRIMS
3-C04	6840	TRIMS & SCUFF PLATES
3-E04	6860	FLOOR MATS & PADS
3-H04	6870	SERVICE TOOLS
3-I04	6900	VISORS,ASSIST HANDLES & MIRRORS
3-K04	6930	CAUTION PLATES & LABELS
3-M04	7250	QUARTER WINDOW & TRIMS

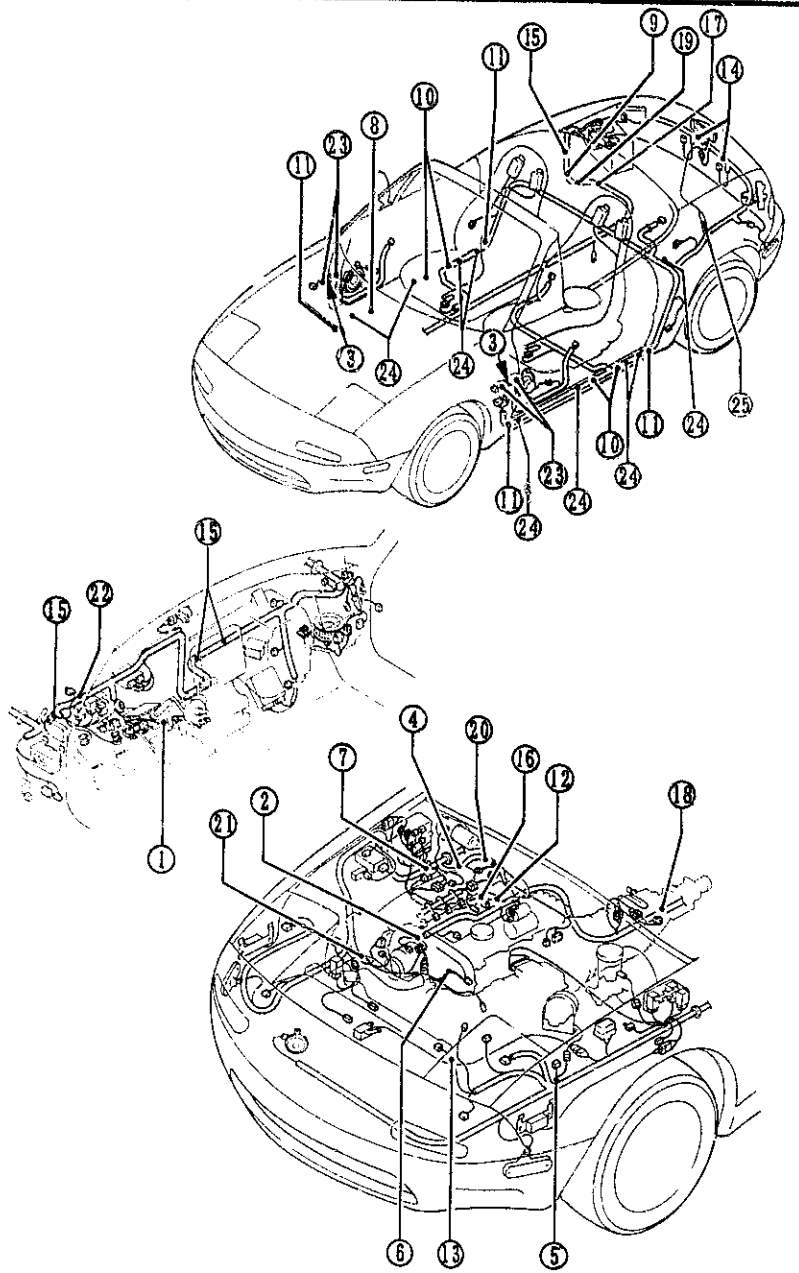

① 14-726	② 18-996A	③ 45-961B	④ 67-CS1	⑤ 67-CT2	⑥ 67-011C
			99786-0612		
⑦ 67-013A	⑧ 67-013D	⑨ 67-014F	⑩ 67-022	⑪ 67-026	⑫ 67-048A
		99786-0620			99786-0612
⑬ 67-051E	⑭ 67-051J	⑮ 67-052H	⑯ 67-062B	⑰ 67-072H	⑱ 67-073
			99786-0612	99786-0620	90845-0612
⑲ 67-073A	⑳ 67-073B	㉑ 67-074	㉒ 67-076	㉓ 67-191	㉔ 68-865
	99940-0603	99786-0612			
㉕ 67-KW1					

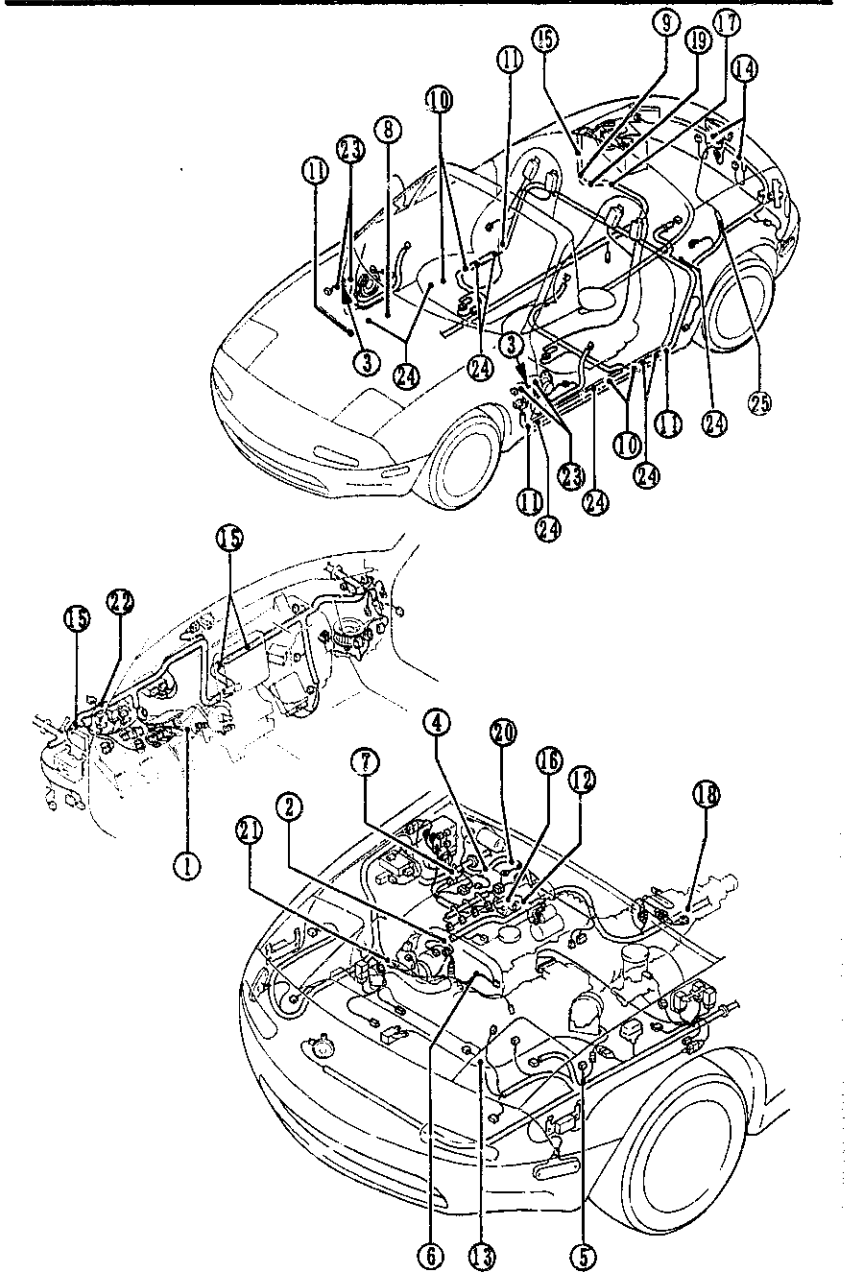

6704 -1 WIRING HARNESS CLAMPS

PART NO.	QTY	MODEL/RESTRICTION	MODEL/RESTRICTION	MODEL/RESTRICTION	FROM-TO
14-726 N304-14-726	1	BAND			
18-996A BF67-67-996	1	CLIP			
45-961B H002-45-961	2	CAP			
67-CS1 N001-67-CS1C	1	CLIP,HARNESS			
67-CT2 NA01-67-CH5	1	CLIP,HARNESS			
67-KW1 N007-67-KW1	1	CAP,CONNECTOR-REAR HARNESS			1801-
67-011C E356-18-141	1	CLIP			
67-013A UB42-67-013	1	CLIP			-0901
67-013D NA01-67-P54	1	PROTECTOR,HARNESS			
67-014F NA01-67-P71	1	PROTECTOR,HARNESS			
67-022 NA01-67-CW5A	4	CLIP,HARNESS			
67-026 NA02-67-CW5A	4	CLIP,HARNESS			
67-048A NA01-67-CS1	1	CLIP,HARNESS			
67-051E UB42-67-051	1	CLIP			

0901 NA35**-208969
1801 NA35**-300014

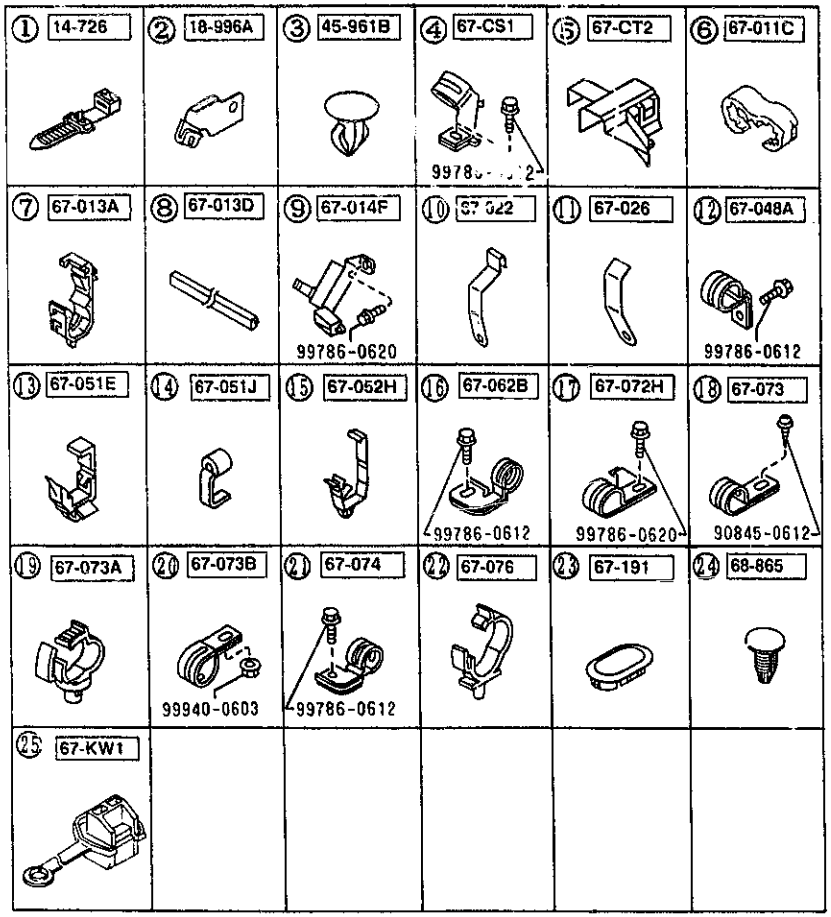

PART NO.	QTY	MODEL/RESTRICTION	MODEL/RESTRICTION	MODEL/RESTRICTION	FROM-TO
67-051J		CLIP			
G031-67-053A	2				
67-052H		CLIP			
G030-67-018A	3				-0901
G030-67-018A	4				0901-
67-062B		CLIP,HARNESS			
NA02-67-CS1A	1				
67-072H		CLIP,ENGINE HARNESS			
NA01-67-CS6	1				
67-073		CLIP			
UB73-67-073A	1				
67-073A		CLIP			
NA01-67-CH7	1				-1801
67-073B		CLIP			
H261-67-073	1				
67-074		CLIP,HARNESS			
NA01-67-CS5	1				
67-076		CLIP,ENGINE HARNESS			
NA01-67-CH8	1				
67-191		GROMMET			
B300-67-HD1	4				
68-865		FASTENER			
B003-68-865	8				
00	INT-	NA0 NA2 BLACK			
81	INT-	NA1 BEIGE			

0901 NA35**-208969
1801 NA35**-300014

(THIS ILLUSTRATION CONSISTS OF 2 PAGES)

(A,LOCK BRAKE)

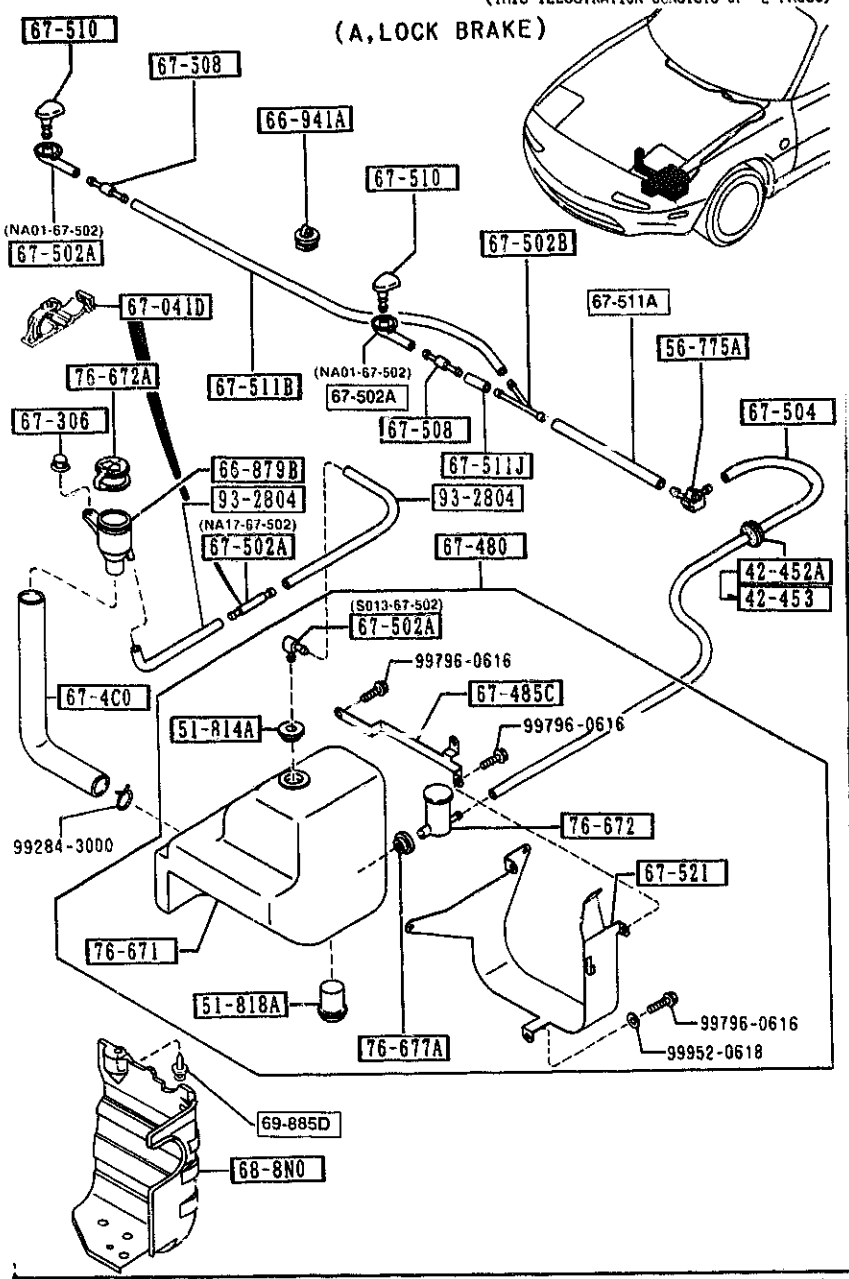

(THIS ILLUSTRATION CONSISTS OF 2 PAGES)

(W/O A,LOCK BRAKE)

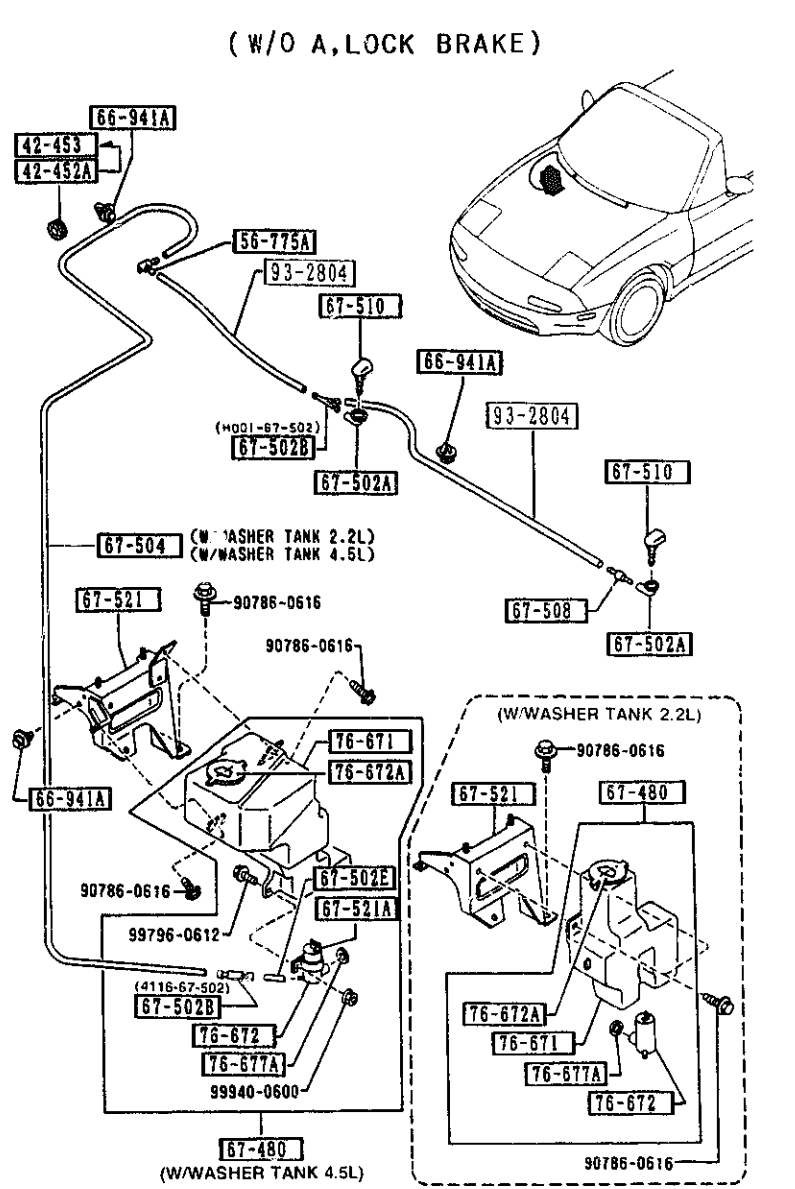

(THIS ILLUSTRATION CONSISTS OF 2 PAGES)

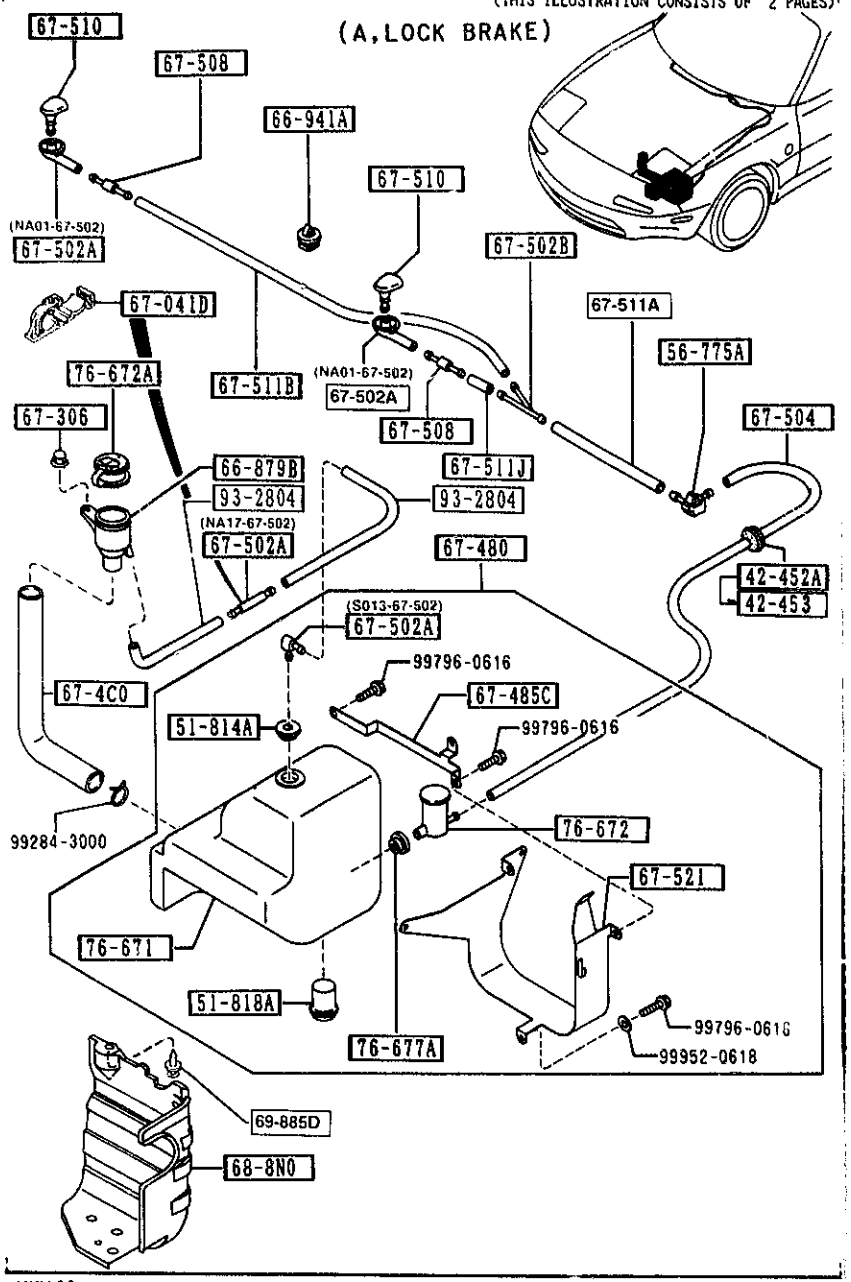

PART NO.	QTY	MODEL/RESTRICTION	MODEL/RESTRICTION	MODEL/RESTRICTION	FROM-TO
42-452A		GROMMET			
0111-41-692	1				-0717
42-453		PROTECTOR,CABLE			
B048-42-453	1				0717-
51-814A		GROMMET,WASHER TANK			
B002-51-814	1	(A.LOCK BRAKE)			
51-818A		SWITCH,LEVEL-WASHER TANK			
NA17-67-488	1	(A.LOCK BRAKE)			
56-775A		CLIP,WASHER HOSE			
LA01-67-505A AN(LA01-67-505B)	1				-1730
LA01-67-505B	1				1730-
66-879B		JOINT			
NA17-67-4C2	1	(A.LOCK BRAKE)			
66-941A		CLIP			
GB08-66-941	3	(A.LOCK BRAKE)			
GB08-66-941	4	(W/O A.LOCK BRAKE)			
67-041D		CLIP,HARNESS			
B092-67-041	1	(A.LOCK BRAKE)			
67-306		NUT,WIPER LINK			
GJ21-67-306	1	(A.LOCK BRAKE)			
67-4C0		PIPE,FILLER-F.WASHER TANK			
NA17-67-4C1	1	(A.LOCK BRAKE)			
67-480		TANK,WASHER-FRONT			
NA17-67-4T0 A (NA17-67-4T0A)	1				-2427
NA01-67-480 A (NA01-67-480A)	1				-2427
NA04-67-480A A (NA04-67-480B)	1				-2427
NA17-67-4T0A	1	(A.LOCK BRAKE)			2427-

0717 NA35**-202687
1730 NA35**-235561
2427 NA35**-326019

(THIS ILLUSTRATION CONSISTS OF 2 PAGES)

(W/O A,LOCK BRAKE)

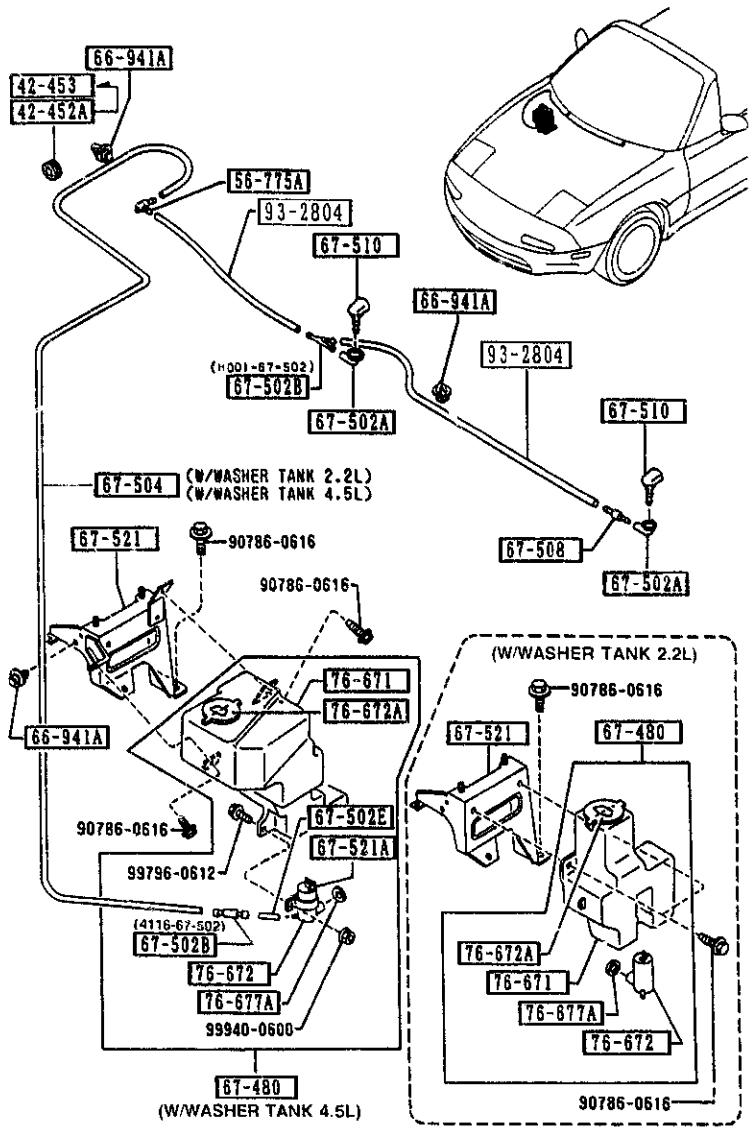

PART NO.	QTY	MODEL/RESTRICTION	MODEL/RESTRICTION	MODEL/RESTRICTION	FROM-TO
CONT'D					
NA01-67-480A	1	BASE, (W/WASHER TANK 2.2L)			2427-
		(W/O A.LOCK BRAKE)			
NA04-67-480B	1	PKG-OPT, (W/WASHER TANK 4.5L)			2427-
		(W/O A.LOCK BRAKE)			
67-485C		BRKT'A',WASHER TANK-FRT			
NA18-67-521	1	(A.LOCK BRAKE)			
67-502A		JOINT,HOSE			
NA01-67-502	2				
NA17-67-502	1	(A.LOCK BRAKE)			
S013-67-502	1	(A.LOCK BRAKE)			
67-502B		JOINT,HOSE			
H001-67-502	1				
4116-67-502	1	PKG-OPT, (W/WASHER TANK 4.5L)			
		(W/O A.LOCK BRAKE)			
67-502E		JOINT,ELBOW-W.TANK			
S084-67-502	1	PKG-OPT, (W/WASHER TANK 4.5L)			
		(W/O A.LOCK BRAKE)			
67-504		HOSE'C',WASHER			
NA01-67-501A	1	(W/O A.LOCK BRAKE)			
NA17-67-501	1	(A.LOCK BRAKE)			
67-508		VALVE,CHECK			
FA54-67-508	1	(W/O A.LOCK BRAKE)			
FA54-67-508	2	(A.LOCK BRAKE)			
67-510		NOZZLE,WASHER-F.WIND			
NA01-67-510	2				
67-511A		PIPE,SCREEN WASHER			
NA18-67-501	1	(A.LOCK BRAKE)			

2427 NA35**-326019

(THIS ILLUSTRATION CONSISTS OF 2 PAGES)

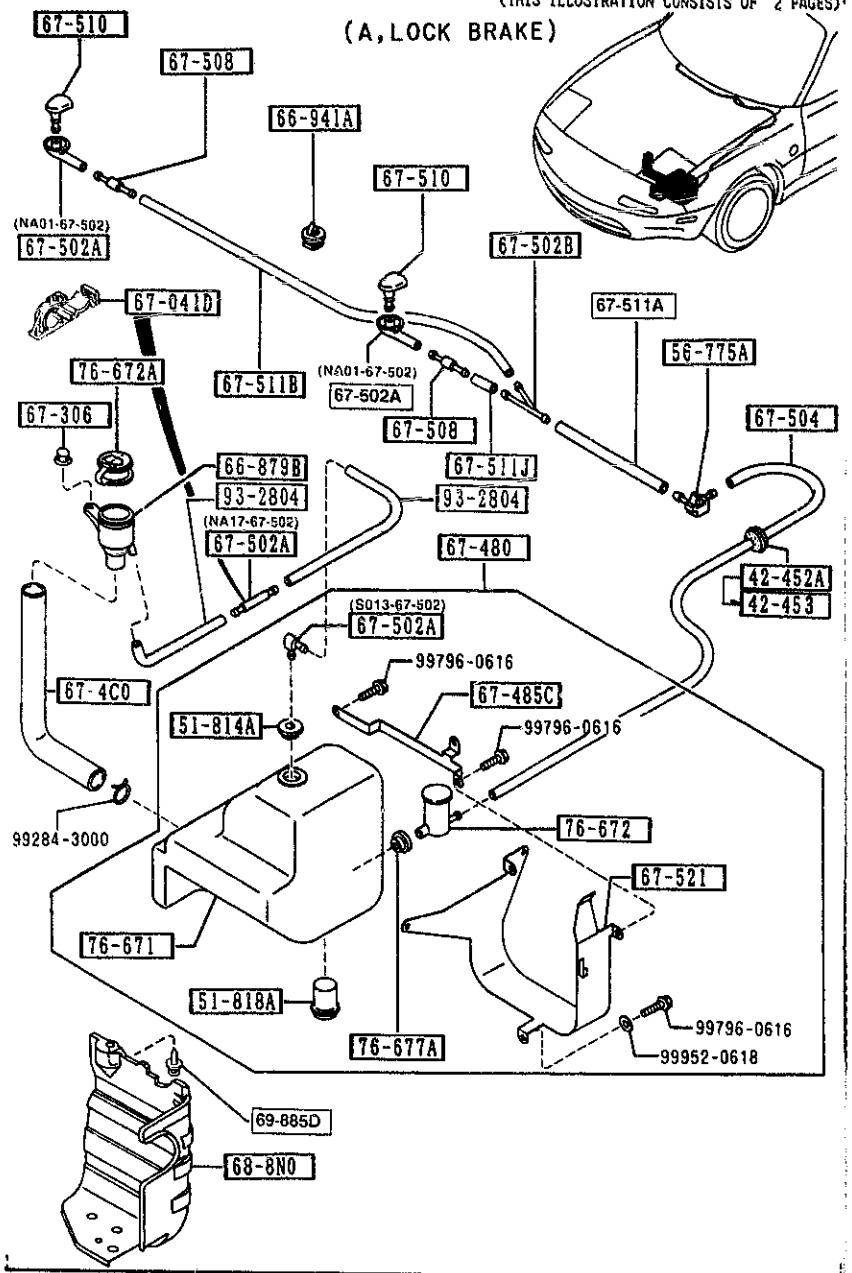

AUNA02 (CONT'D)

6720 -3 WINDSHIELD WASHER

PART NO.	QTY	MODEL/RESTRICTION	MODEL/RESTRICTION	MODEL/RESTRICTION	FROM-TO
67-511B		PIPE,SCREEN WASHER			
NA19-67-501	1	(A.LOCK BRAKE)			
67-511J		PIPE,SCREEN WASHER			
NA15-67-501	1	(A.LOCK BRAKE)			
67-521		BRACKET,WASHER TANK			
NA01-67-520	1	BASE, (W/WASHER TANK 2.2L)			
		(W/O A.LOCK BRAKE)			
NA04-67-520	1	PKG-OPT, (W/WASHER TANK 4.5L)			
		(W/O A.LOCK BRAKE)			
NA17-67-521	1	(A.LOCK BRAKE)			
67-521A		BRACKET			
S095-67-521	1	PKG-OPT, (W/WASHER TANK 4.5L)			
		(W/O A.LOCK BRAKE)			
68-8N0		COVER,WASHER TANK			
NA20-56-181A	1	(A.LOCK BRAKE)			
69-885D		FASTENER			
NA01-56-145	3	(A.LOCK BRAKE)			
76-671		TANK,WASHER			
NA17-67-4T1	1	(A.LOCK BRAKE)			
NA01-67-481	1	BASE, (W/WASHER TANK 2.2L)			
		(W/O A.LOCK BRAKE)			
NA04-67-481	1	PKG-OPT, (W/WASHER TANK 4.5L)			
		(W/O A.LOCK BRAKE)			
76-672		PUMP,WASHER			
LA01-67-482	1	(A.LOCK BRAKE)			
S084-76-672	1	(W/O A.LOCK BRAKE)			
76-672A		CAP,TANK			
UB39-51-815	1	(W/O A.LOCK BRAKE)			

(THIS ILLUSTRATION CONSISTS OF 2 PAGES)

(W/O A,LOCK BRAKE)

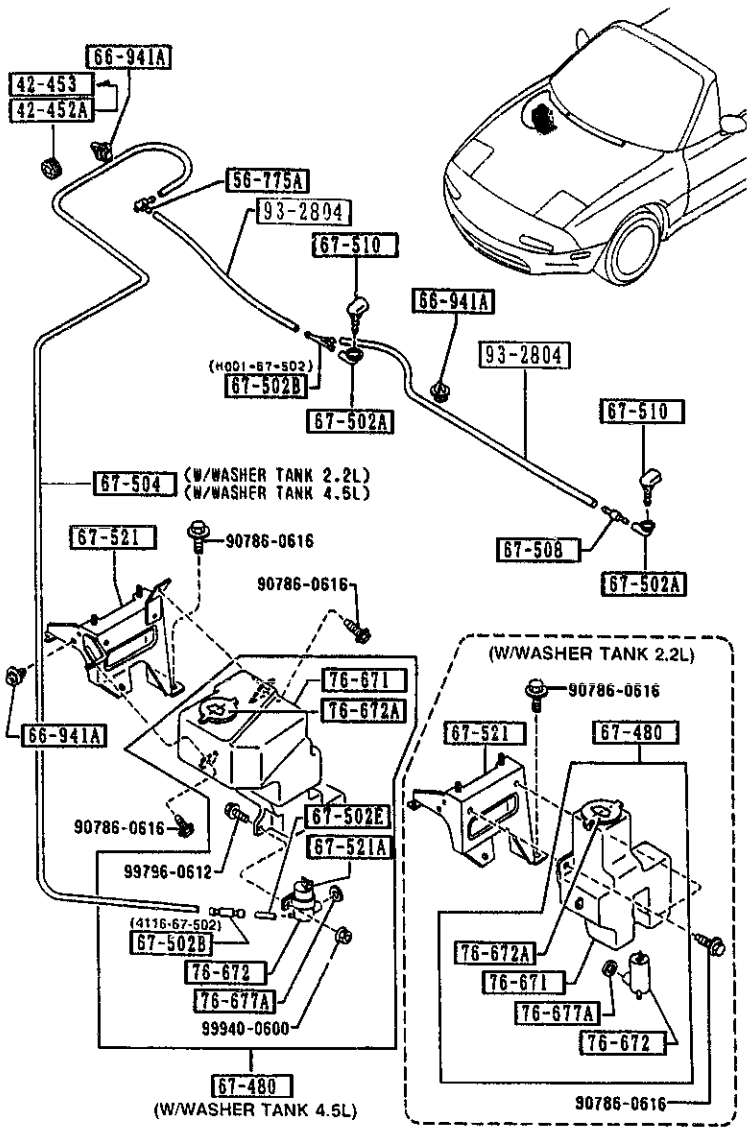

6720 -4 * WINDSHIELD WASHER

PART NO.	QTY	MODEL/RESTRICTION	MODEL/RESTRICTION	MODEL/RESTRICTION	FROM-TO
CONT'D					
GJ21-67-483	1	(A.LOCK BRAKE)			
+----------+					
| 76-677A |		GROMMET,WASHER TANK			
+----------+					
S084-76-677	1				
+----------+					
| 93-2804 |		PIPE,VINYL			
+----------+					
99328-04010	1	L=10M			

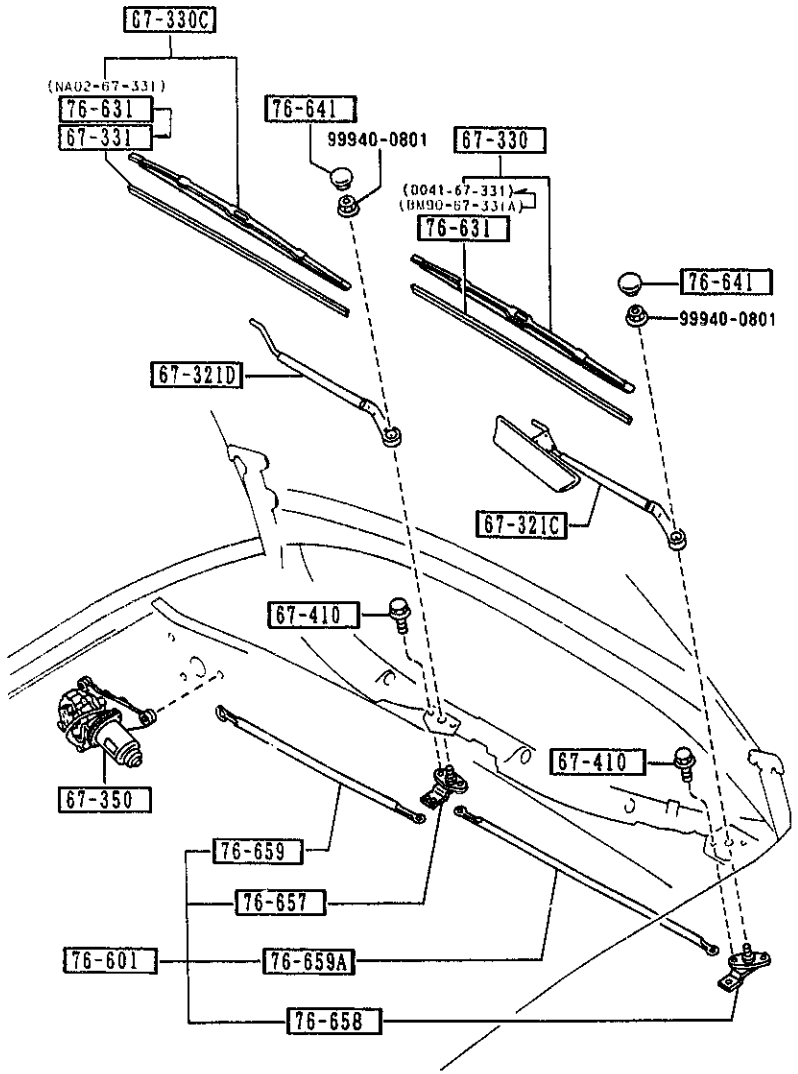

PART NO.	QTY	MODEL/RESTRICTION	MODEL/RESTRICTION	MODEL/RESTRICTION	FROM-TO
67-321C		ARM,WIPER-DRIVER SIDE			
NA01-67-321	1				
67-321D		ARM,WIPER-CO DRIVER SIDE			
NA02-67-321	1				
67-330		BLADE,WIPER-FRONT			
BM90-67-330A AN(BM90-67-330B)	1				-2512
*BM90-67-330B	1				2512-
67-330C		BLADE(R),WIPER-FRONT			
NA02-67-330 AN(NA02-67-330A)	1				-2512
*NA02-67-330A	1				2512-
67-331		RUBBER,BLADE-FRONT			
*N002-67-331	1				2512-
67-350		MOTOR,WIPER			
NA01-67-340B	1	(EXC.COLD SPEC.)			
NA04-67-340A	1	(COLD SPEC.)			
67-410		BOLT			
B455-67-369	4				
76-601		LINK,WIPER			
NA01-67-360A	1				
76-631		RUBBER,BLADE-FRONT			
BM90-67-331A AN(D041-67-331)	1				-2512
NA02-67-331 AN(N002-67-331)	1				-2512
*D041-67-331	1				2512-
76-641		COVER,WIPER ARM-FRONT			
LA01-67-395A	2				
76-657		SHAFT,DRIVE NO.1			
NA01-67-363	1				

2512 NA35**-327166

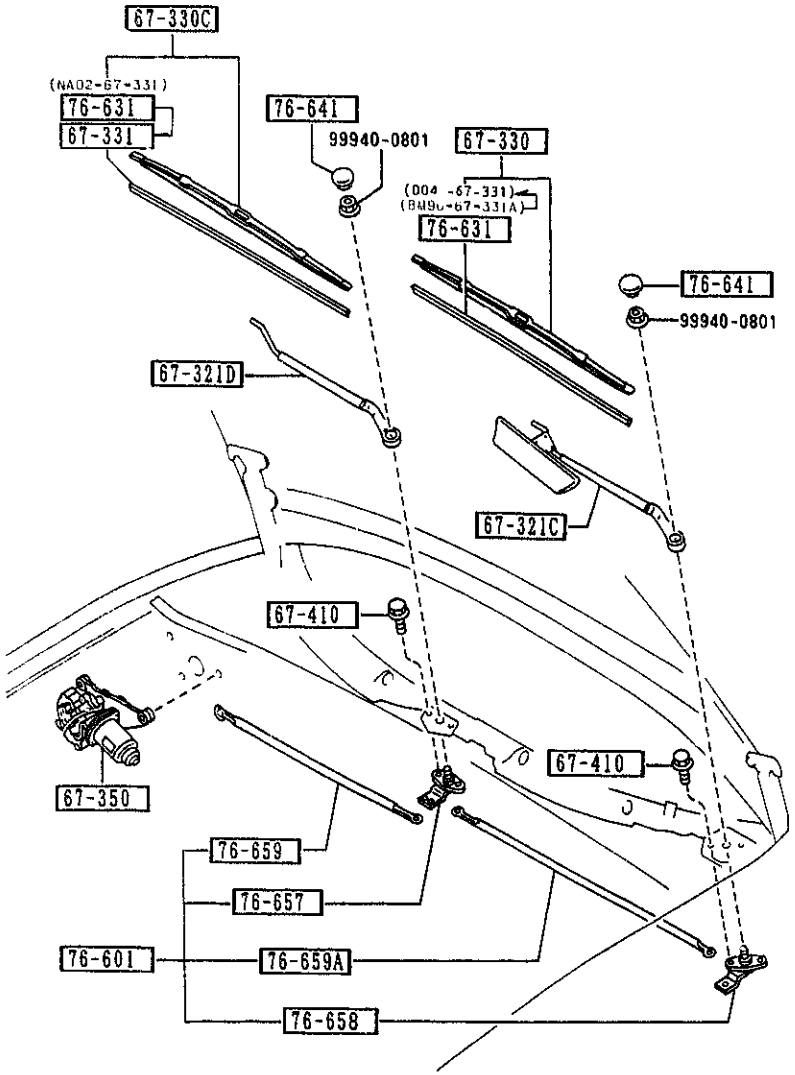

PART NO.	QTY	MODEL/RESTRICTION	MODEL/RESTRICTION	MODEL/RESTRICTION	FROM-TO
76-658		SHAFT,DRIVE NO.2			
NA01-67-364	1				
76-659		ARM NO.1,LINK			
NA01-67-361	1				
76-659A		ARM NO.2,LINK			
NA01-67-362	1				

COMPONENTS OF NA01-67-340B
NA04-67-340A

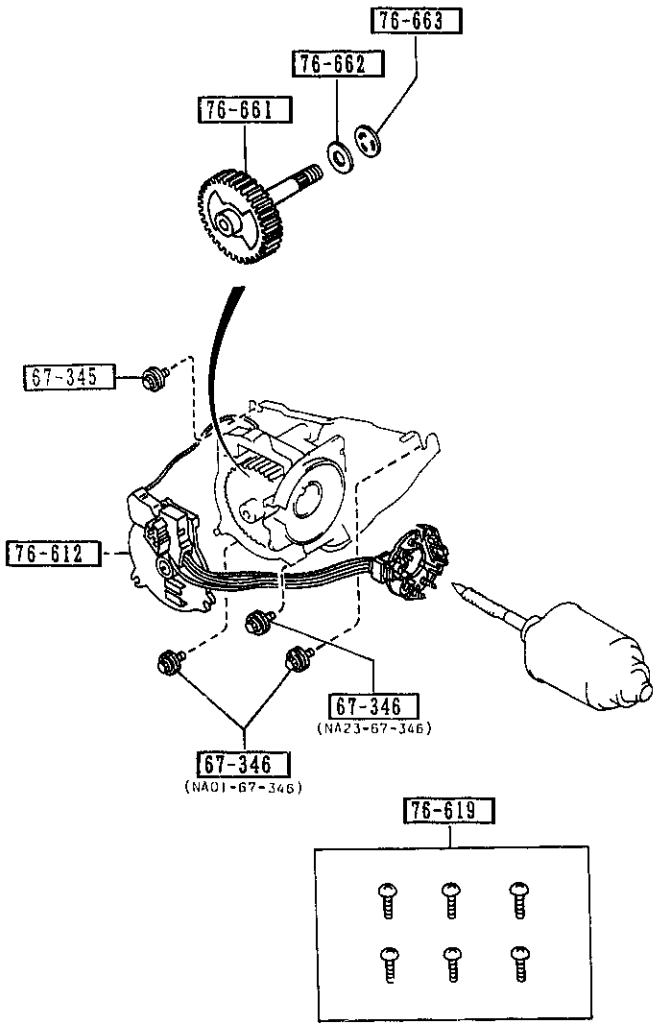

PART NO.	QTY	MODEL/RESTRICTION	MODEL/RESTRICTION	MODEL/RESTRICTION	FROM-TO
67-345		SCREW,EARTH SET-MOTOR BRK			
NA01-67-345	1				
67-346		SCREW,BRACKET-WIPER MOTOR			
NA01-67-346	2				
NA23-67-346	1				
76-612		PLATE,HOLDER-BRUSH			
NA23-67-351	1	(EXC.COLD SPEC.)			
NA26-67-351	1	(COLD SPEC.)			
76-619		PARTS SET			
H043-76-619A	1				
76-661		GEAR,SHAFT			
NA23-67-354	1				
76-662		WASHER			
B094-76-662	1				
76-663		WASHER,TOOTHED			
B094-76-663	1				

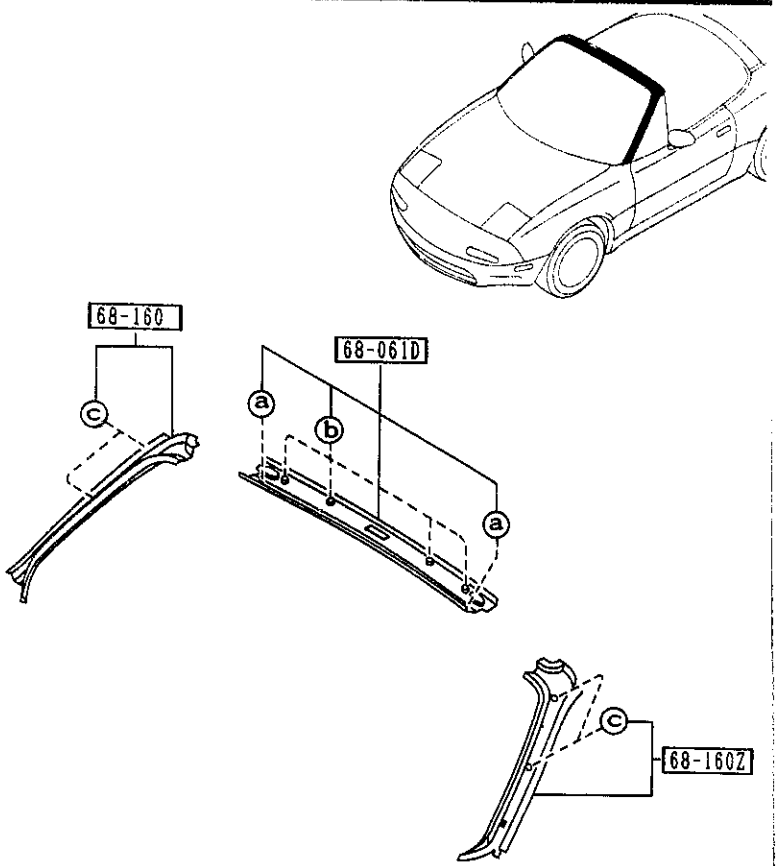

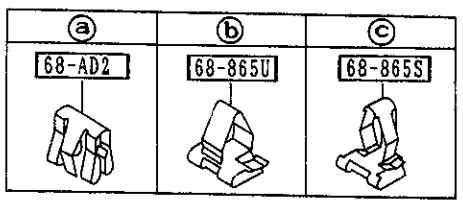

PART NO.	QTY	MODEL/RESTRICTION	MODEL/RESTRICTION	MODEL/RESTRICTION	FROM-TO
68-AD2		CLIP			
B455-68-AD2	2				
68-061D		TRIM,FRONT HEADER			
NA01-68-090A	1				
00	INT-	NA0 NA1 BLACK			
68-160		TRIM(R),'A'PILLAR			
NA01-68-160	1				
00	INT-	NA0 NA1 BLACK			
68-160Z		TRIM(L),'A'PILLAR			
NA01-68-170	1				
00	INT-	NA0 NA1 BLACK			
68-865S		CLIP,TRIM			
GJ12-68-865	4				
68-865U		CLIP,TRIM			
GJ21-68-865	4				

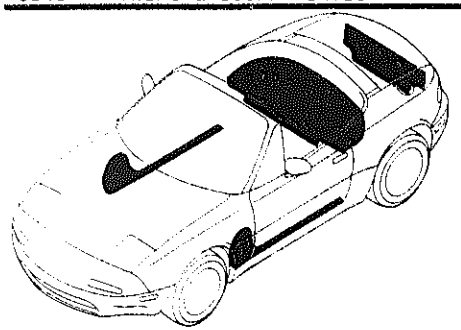

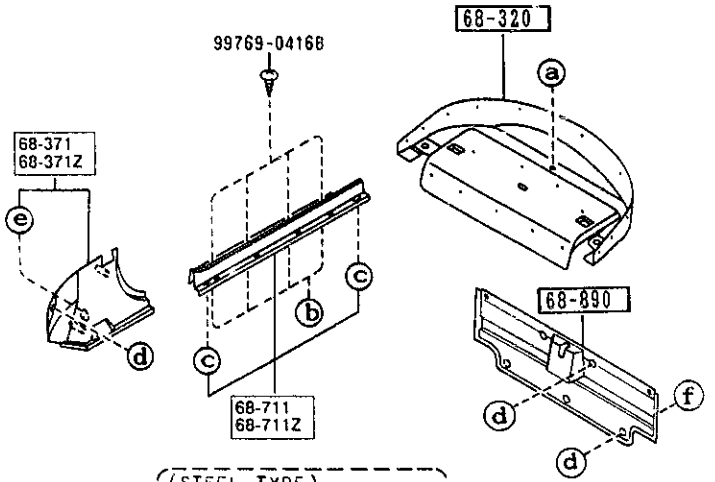

PART NO.	QTY	MODEL/RESTRICTION	MODEL/RESTRICTION	MODEL/RESTRICTION	FROM-TO
68-320		TRAY,REAR PACKAGE			
NA01-68-3F1B	1				
00	INT-	NA0 BLACK			
88	INT-	NA1 TAN			
68-371		TRIM(R),FRONT SIDE			
NA01-68-370	1				
00	INT-	NA0 BLACK			
88	INT-	NA1 TAN			
68-371Z		TRIM(L),FRONT SIDE			
NA01-68-390	1				
00	INT-	NA0 BLACK			
88	INT-	NA1 TAN			
68-402B		GROMMET,SCREW			
FA54-68-719B	8				
68-711		PLATE(R),FRONT SCUFF			
NA01-68-710	1	BASE, (PLASTIC TYPE)			
00	INT-	NA0 NA1 BLACK			
NA02-68-710	1	V-SPECIAL, (STEEL TYPE)			
68-711Z		PLATE(L),FRONT SCUFF			
NA01-68-720	1	BASE, (PLASTIC TYPE)			
00	INT-	NA0 NA1 BLACK			
NA02-68-720	1	V-SPECIAL, (STEEL TYPE)			
68-712B		CLIP			
B235-68-712	4	BASE, (PLASTIC TYPE)			
68-86Y		CAP,SEAL-TRUNK END TRIM			
KA01-68-86Y (KA01-68-86YA)	3				-1301
KA01-68-86YA	3				1301-

1301 NA35**-231464

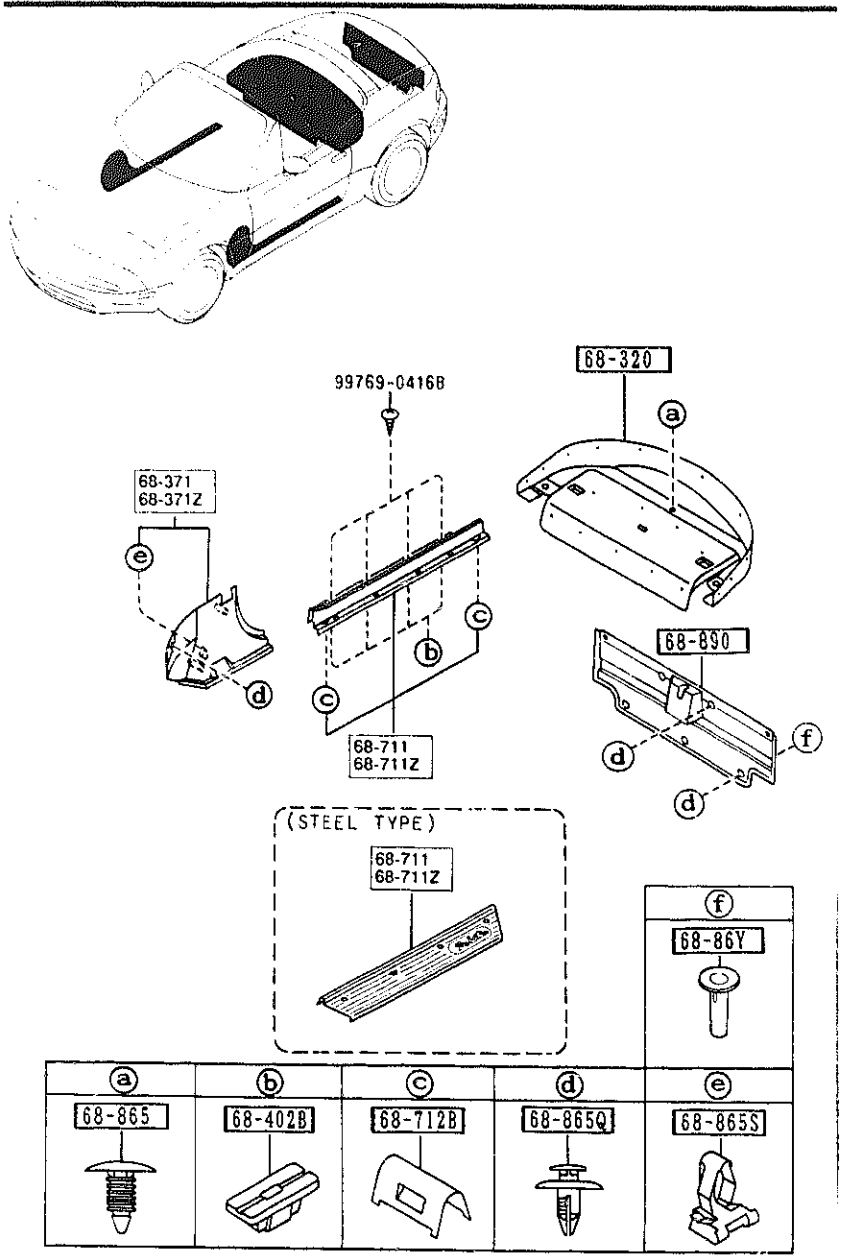

PART NO.	QTY	MODEL/RESTRICTION	MODEL/RESTRICTION	MODEL/RESTRICTION	FROM-TO
68-865		FASTENER			
G032-68-865A	20				
00	INT-	NA0 NA1 BLACK			
68-865Q		FASTENER			
GJ21-68-885B	9				
00	INT-	NA0 NA1 NA2 BLACK			
88	INT-	NA1 TAN			
68-865S		CLIP,TRIM			
GJ12-68-865	2				
68-890		TRIM,TRUNK END			
NA01-68-891	1				
00	INT-	NA0 NA1 NA2 BLACK			

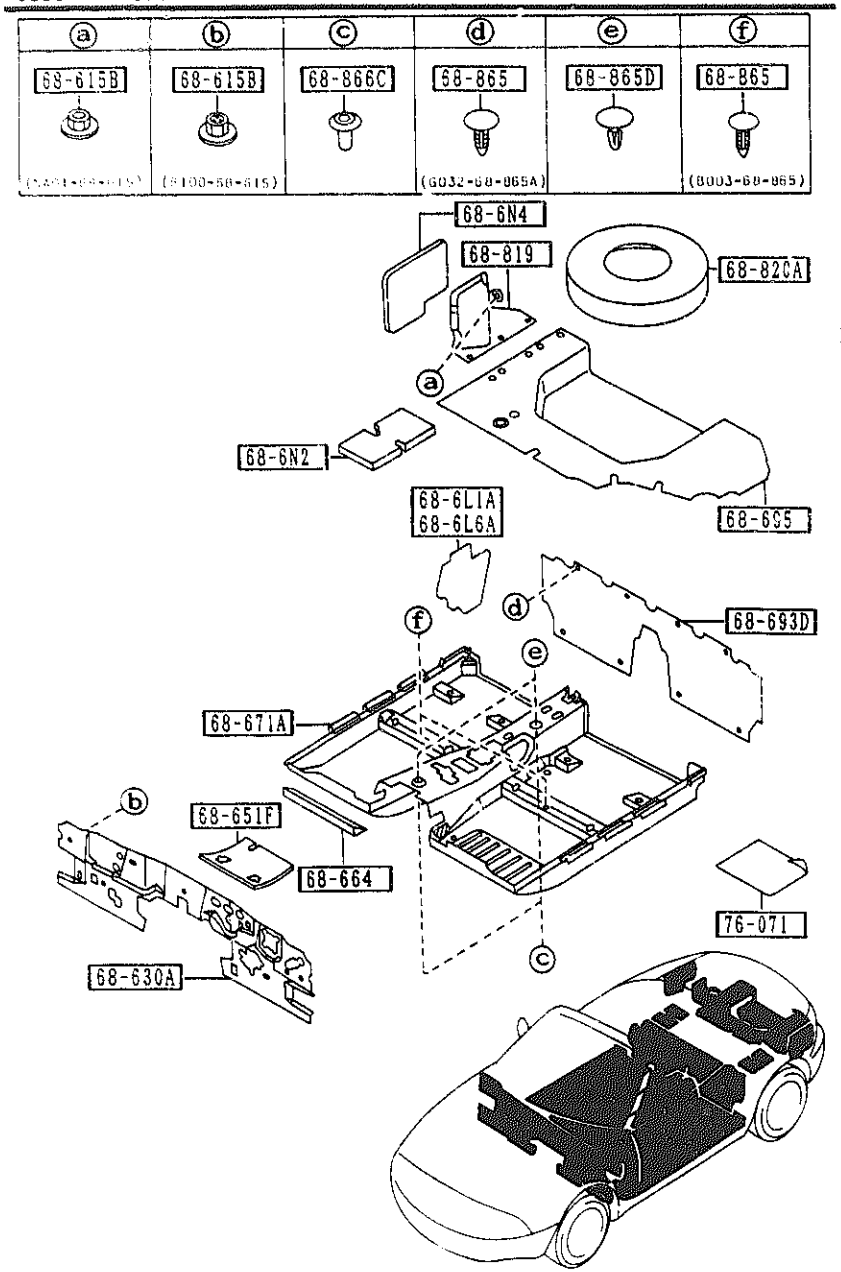

PART NO.	QTY	MODEL/RESTRICTION	MODEL/RESTRICTION	MODEL/RESTRICTION	FROM TO
68-6L1A NA01-68-6L1	1	COVER(R),HOLE			
68-6L6A NA01-68-6L6	1	COVER(L),HOLE			
68-6N2 NA01-68-6N2	2	INSULATOR,RR FLOOR			
68-6N4 NA01-68-6N4	1	PAD,RR FENDER			
68-615B B100-68-615	5	NUT,FLANGE-CAP			
NA01-68-615	1				
68-630A NA01-68-631B	1	INSULATOR,DASHBOARD			-0809
A (NA01-68-631C) NA01-68-631C	1				0809-
68-651F FB01-68-652	1	PAD,FRONT FLOOR			
68-664 NA01-68-664A	1	CUSHION,UNIT COVER			
68-671A NA20-68-67X	1	MAT,FLOOR			-0901
00	INT-	NA0 BLACK			
NA13-68-67XC A (NA13-68-67XD)	1				-1801
00	INT-	NA0 BLACK			
88	INT-	NA1 TAN			
NA01-68-67XD A (NA01-68-67XE)	1				0901-1801
00	INT-	NA0 BLACK			
NA01-68-67XE	1	(BLACK-USA)			1801-
00	INT-	NA0 BLACK			
NA13-68-67XD	1	(TAN-JAPAN)			1801-

0809 NA35**-206196
0901 NA35**-208969
1801 NA35**-300014

6860 FLOOR MATS & PADS

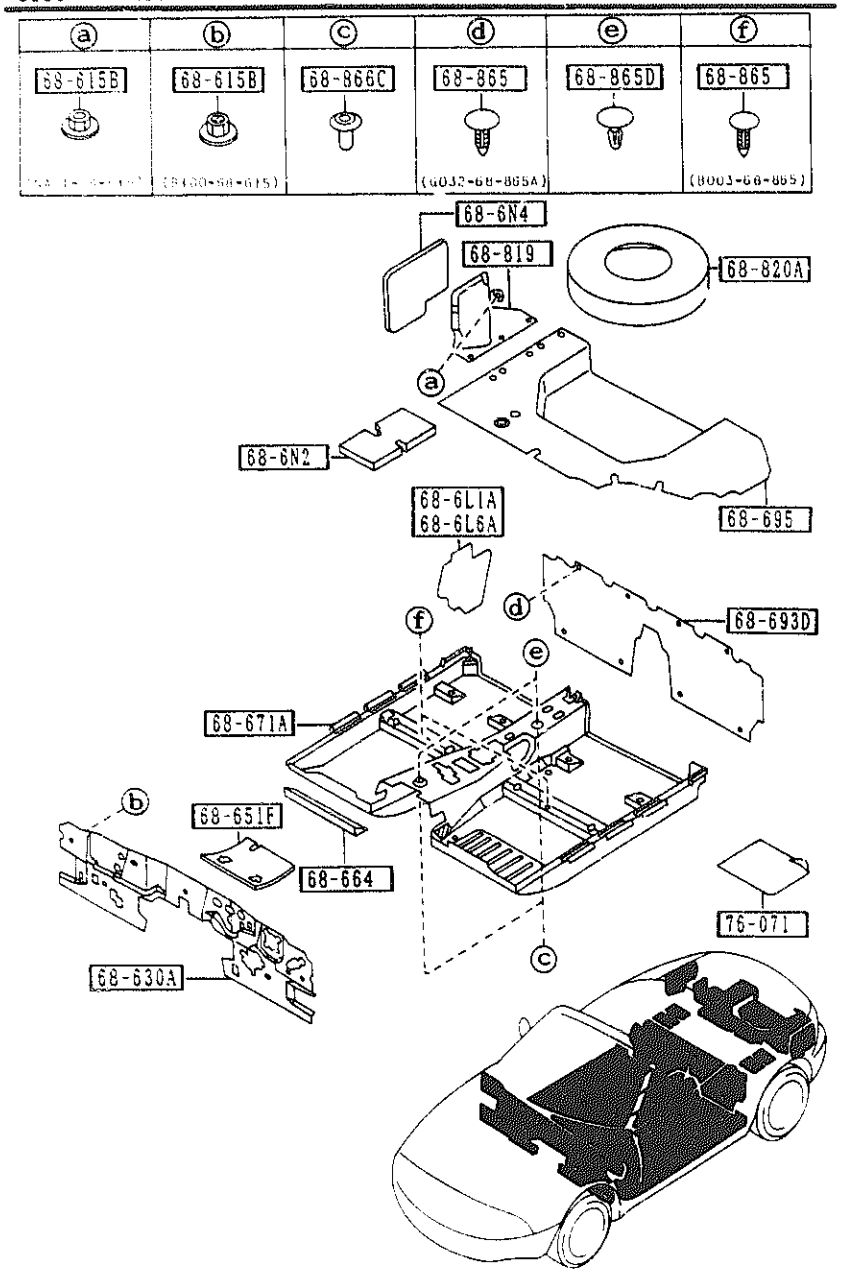

PART NO.	QTY	MODEL/RESTRICTION	MODEL/RESTRICTION	MODEL/RESTRICTION	FROM TO
CONT'D					
00	INT-	NA0 BLACK			
88	INT-	NA1 TAN			
+----------+					
| 68-693D |		MAT,REAR END			
+----------+					
NA01-68-693	1	(BLACK-USA)			
00	INT-	NA0 BLACK			
N001-68-693	1	(TAN-JAPAN)			
00	INT-	NA0 BLACK			
88	INT-	NA1 TAN			
+----------+					
| 68-695 |		MAT,TRUNK ROOM			
+----------+					
NA01-68-811	1				
00	INT-	NA0 NA1 NA2 BLACK			
+----------+					
| 68-819 |		COVER,BATTERY			
+----------+					
NA01-68-819B	1				
00	INT-	NA0 NA1 NA2 BLACK			
+----------+					
| 68-820A |		COVER,SPARE TIRE			
+----------+					
NA01-68-8P9A	1				
+----------+					
| 68-865 |		FASTENER			
+----------+					
B003-68-865	2				
00	INT-	NA0 BLACK			
81	INT-	NA1 BEIGE			
G032-68-865A	4				
00	INT-	NA0 BLACK			
88	INT-	NA1 TAN			
+----------+					
| 68-865D |		FASTENER			
+----------+					
S083-68-865A	6				
00	INT-	NA0 BLACK			
88	INT-	NA1 TAN			
+----------+					
| 68-866C |		FASTENER,SEAL			
+----------+					
B235-68-865A	6				

6860 FLOOR MATS & PADS

ⓐ	ⓑ	ⓒ	ⓓ	ⓔ	ⓕ
68-615B	68-615B	68-866C	68-865	68-865D	68-865
			(8032-68-865A)		(8003-68-865)

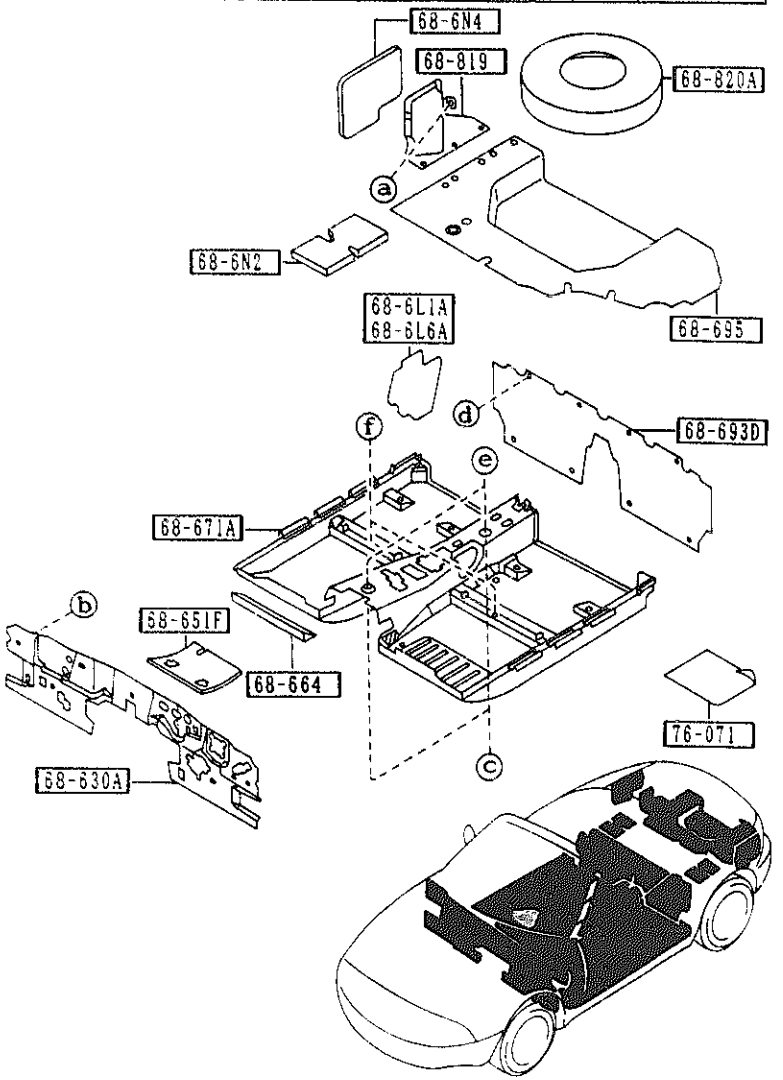

PART NO.	Q'ty	MODEL/RESTRICTION	MODEL/RESTRICTION	MODEL/RESTRICTION	FROM TO
76-071		SILENCER,FLOOR			
0208-76-071	1	30CMX30CM			

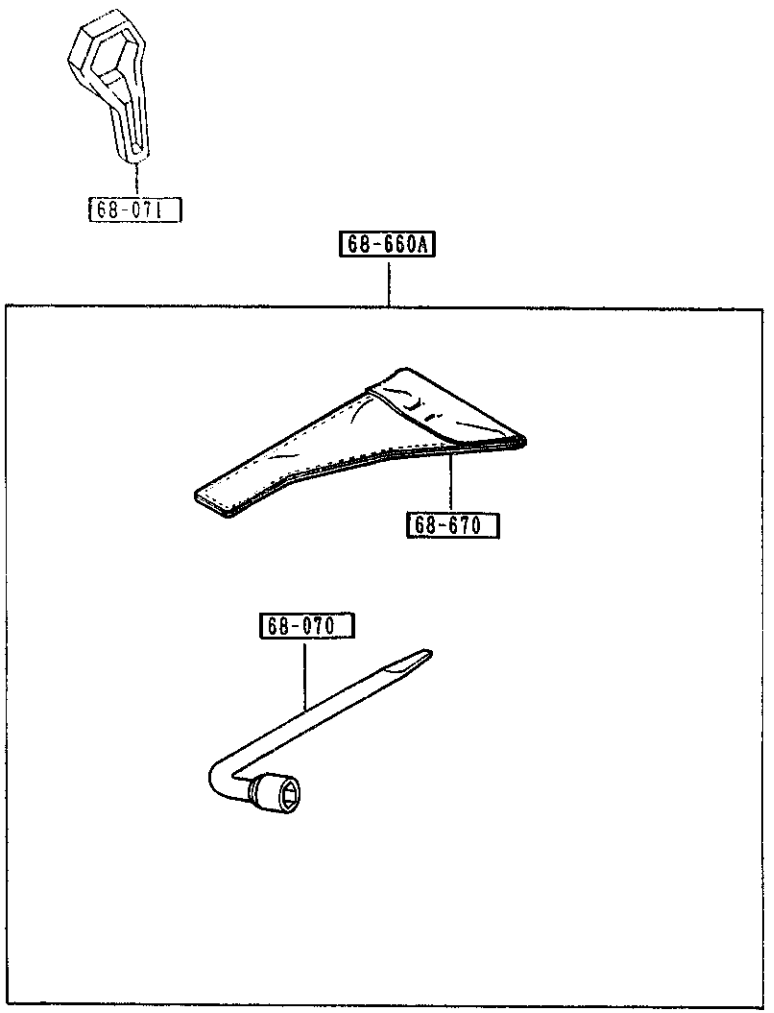

6870 -1 * SERVICE TOOLS

PART NO.	QTY	MODEL/RESTRICTION	MODEL/RESTRICTION	MODEL/RESTRICTION	FROM-TO
68-070		WRENCH,HUB NUT			
NA01-68-070	1				
68-071		WRENCH,WHEEL CAP			
*F057-68-071	1	SP-AD, (BBS ALUMI.WHEEL)			1801-
68-660A		TOOL SET			
NA01-69-650	1				
68-670		BAG,TOOL			
NA01-69-670	1				

1801 NA35**-300014

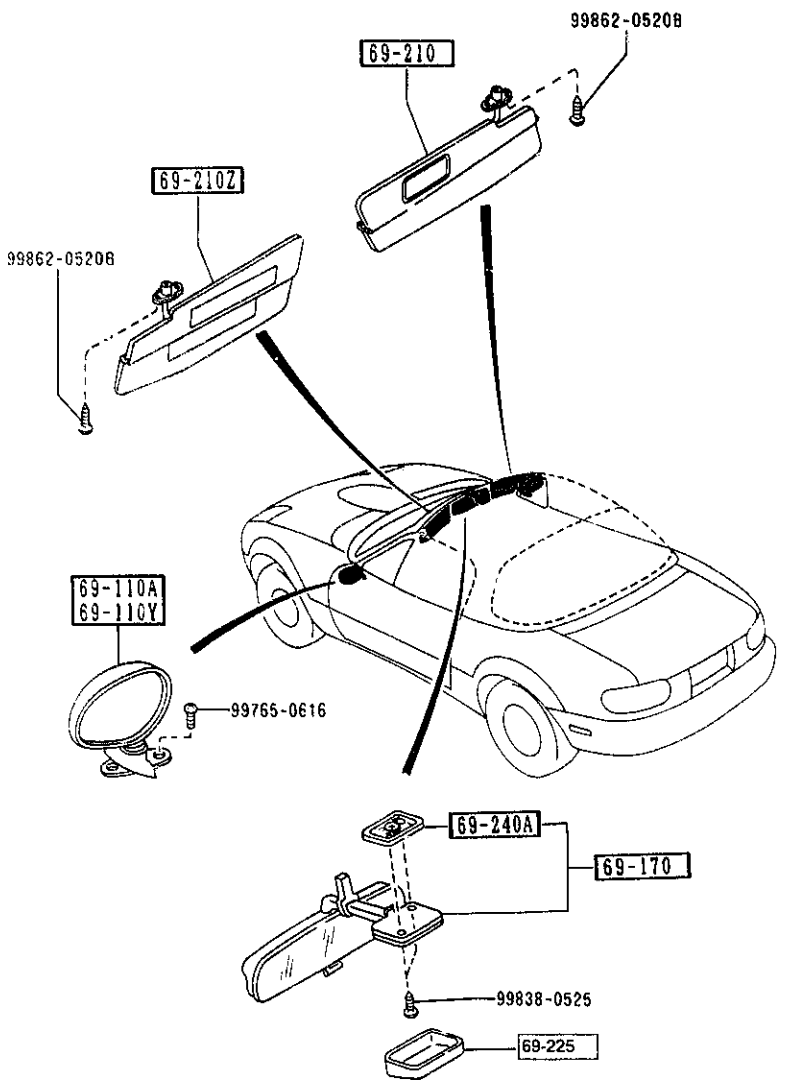

PART NO.	QTY	MODEL/RESTRICTION	MODEL/RESTRICTION	MODEL/RESTRICTION	FROM-TO
69-110A		MIRROR(R),DOOR			
NA05-69-120	1				
DU	EXT-	DU MARINER BLUE			
HU	EXT-	HU NEO GREEN			
HZ	EXT-	HZ SUNBURST YELLOW			
PZ	EXT-	PZ BRILLIANT BLACK			
SU	EXT-	SU CLASSIC RED			
UC	EXT-	UC CRYSTAL WHITE			
3L	EXT-	3L SILVER STONE METALLIC			
69-110Y		MIRROR(L),DOOR			
NA05-69-180	1				
DU	EXT-	DU MARINER BLUE			
HU	EXT-	HU NEO GREEN			
HZ	EXT-	HZ SUNBURST YELLOW			
PZ	EXT-	PZ BRILLIANT BLACK			
SU	EXT-	SU CLASSIC RED			
UC	EXT-	UC CRYSTAL WHITE			
3L	EXT-	3L SILVER STONE METALLIC			
69-170		MIRROR,INTERIOR			
NA01-69-220	1				
00	INT-	NA0 NA1 NA2 BLACK			
69-210		SUN VISOR(R)			
NA01-69-270B	1				
02	INT-	NA0 NA1 NA2 BLACK			
69-210Z		SUN VISOR(L)			
NA01-69-320C	1				
02	INT-	NA0 NA1 NA2 BLACK			
69-225		COVER,INTERIOR MIRROR			
GJ21-69-225	1				
00	INT-	NA0 NA1 NA2 BLACK			

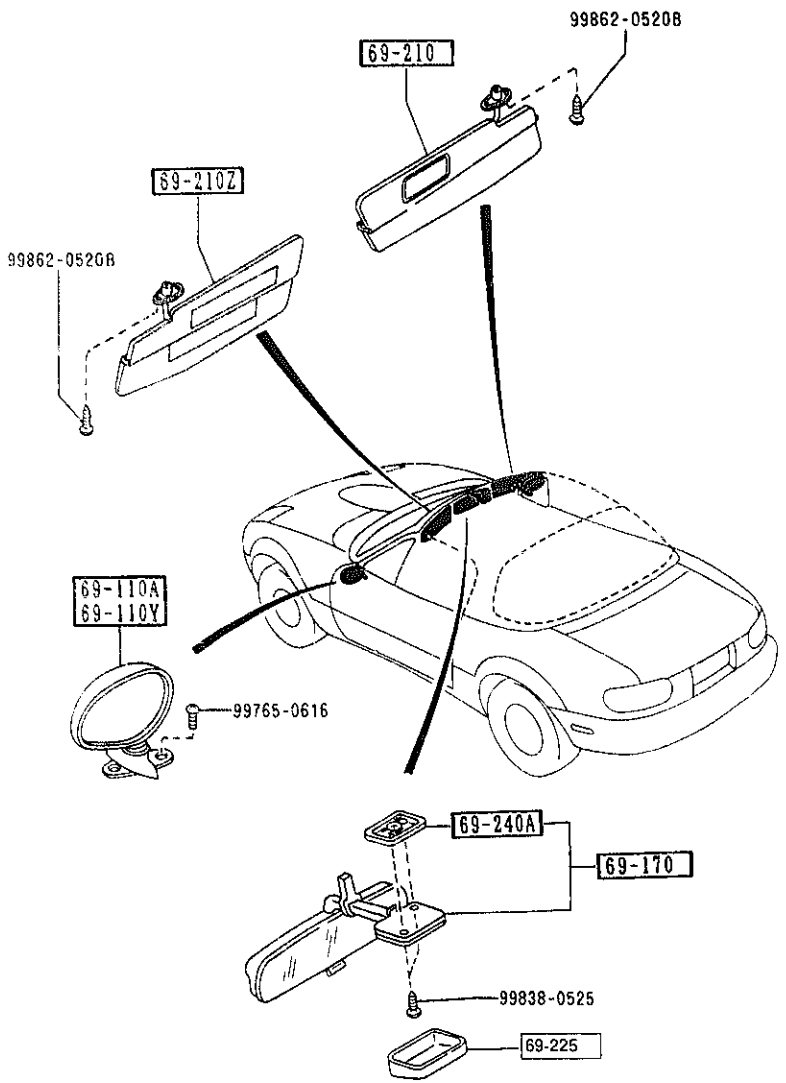

PART NO.	QTY	MODEL/RESTRICTION	MODEL/RESTRICTION	MODEL/RESTRICTION	FROM-TO
69-240A		BASE,INTERIOR MIRROR			
NA01-69-240	1				

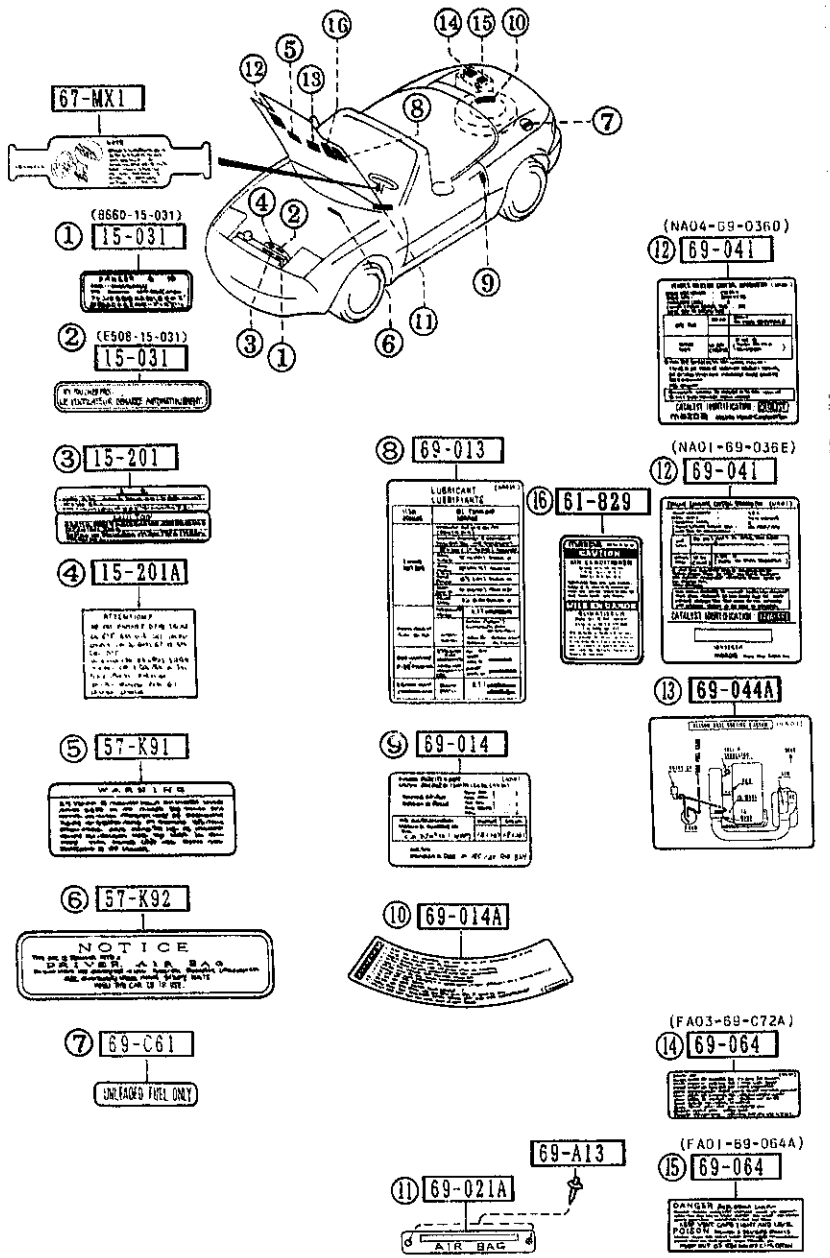

PART NO.	QTY	MODEL/RESTRICTION	MODEL/RESTRICTION	MODEL/RESTRICTION	FROM-TO
15-031		LABEL,CAUTION			
B660-15-031	1				
E508-15-031	1				
15-201		PLATE,CAUTION			
0488-15-201	1				
15-201A		LABEL,CAUTION-RADIATOR			
8791-15-201	1				
57-K91		LABEL'A',CAUTION-A/B			
NA01-57-K91	1				
57-K92		LABEL'B',CAUTION-A/B			
NA01-57-K92	1				
61-829		LABEL,CAUTION			
NA01-61-439	1	(A)			
67-MX1		LABEL,CAUTION-AIR BAG			
NA01-67-MX1	1				
69-A13		RIVET,BAND-MODEL PLATE			
GJ21-69-A13	2				
69-C61		LABEL,UNLEADED FUEL			
UB40-69-C61	1				
69-013		LABEL,OIL			
NA01-69-D21C	1				
69-014		LABEL,TIRE			
NA01-69-014	1				
69-014A		LABEL,TEMPORARY TIRE			
BF68-69-073	1	ENGLISH			
BF69-69-073B	1	FRENCH			

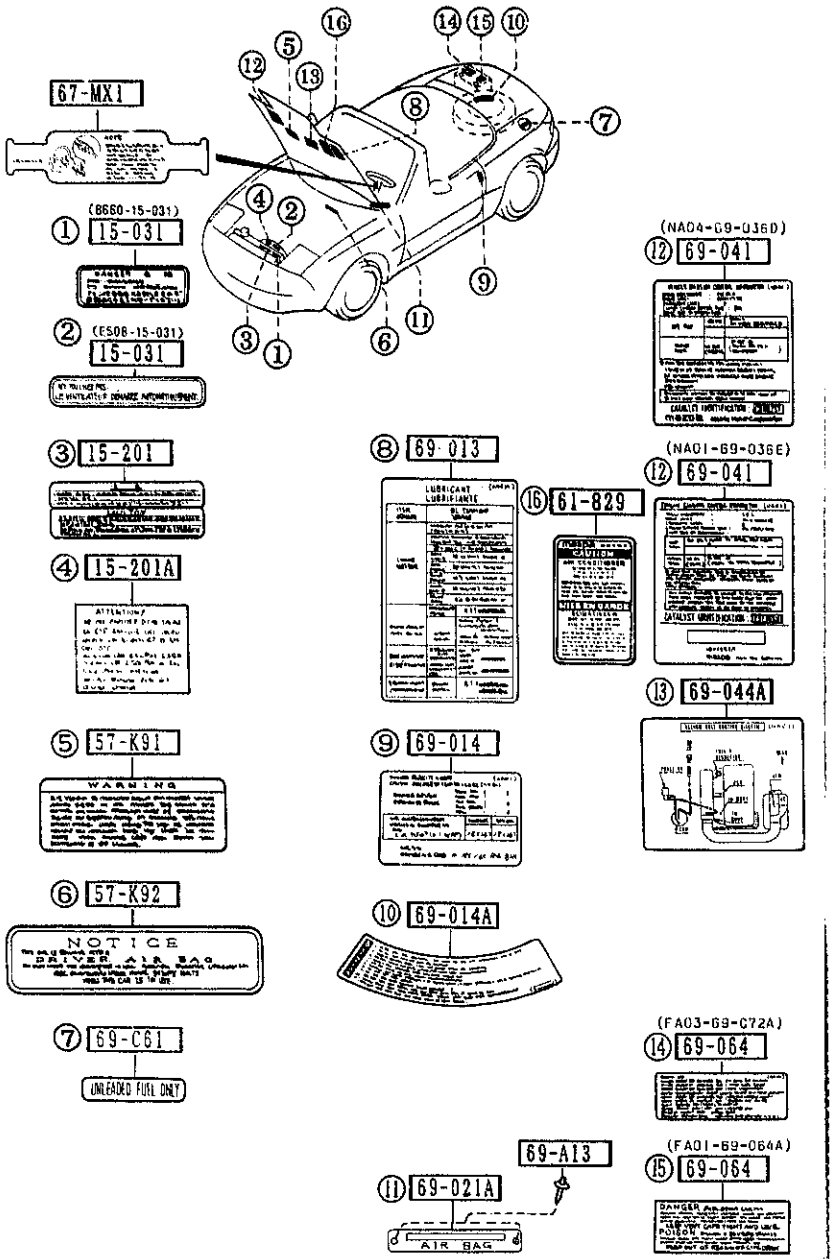

PART NO.	QTY	MODEL/RESTRICTION	MODEL/RESTRICTION	MODEL/RESTRICTION	FROM-TO
69-021A		PLATE,CAUTION			
NA01-69-068 A (NA01-69-068A)	1				-0B01
NA01-69-068A	1				0B01-
69-041		LABEL,EMISSION			
NA01-69-036D	1	(EM LABEL-CALIF.)			-1801
NA04-69-036C	1	(EM LABEL-FED)			-1801
NA01-69-036E	1	(EM LABEL-CALIF.)			1801-
NA04-69-036D	1	(EM LABEL-FED)			1801-
69-044A		LABEL,VAC.DIAPHRAGM			
NA01-69-044	1	(EM LABEL-CALIF.)			
69-064		LABEL,BATTERY			
FA03-69-C72A	1				
FA01-69-064A	1				

0B01 NA35**-217311
1801 NA35**-300014

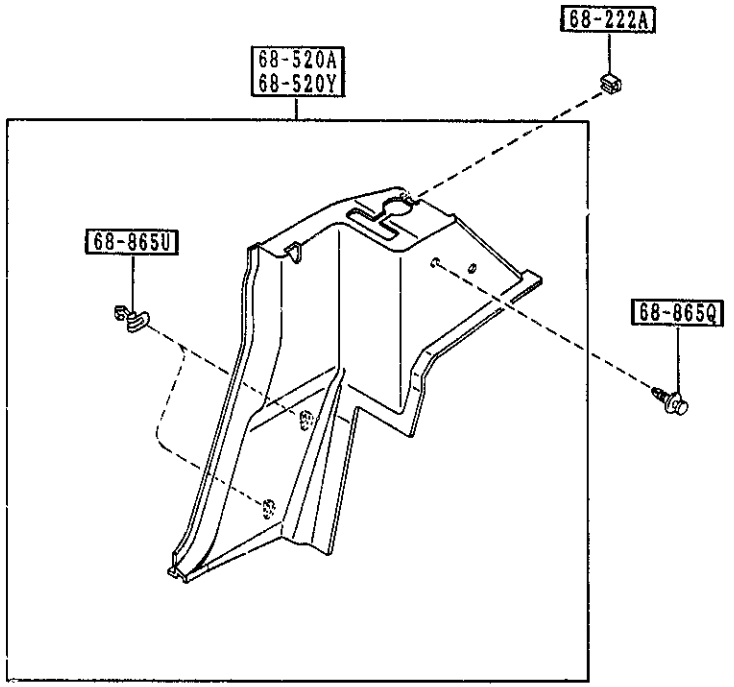

PART NO.	QTY	MODEL/RESTRICTION	MODEL/RESTRICTION	MODEL/RESTRICTION	FROM-TO
68-222A		COVER,HOLE			
NA01-68-222A	2				
00	INT-	NA0 BLACK			
88	INT-	NA1 TAN			
68-520A		TRIM(R),QUARTER			
NA01-68-520A	1	BASE, (W/O DETACHABLE TOP)			
00	INT-	NA0 BLACK			
88	INT-	NA1 TAN			
NA02-68-520A	1	OPTION, (W/DETACHABLE TOP)			
00	INT-	NA0 BLACK			
88	INT-	NA1 TAN			
68-520Y		TRIM(L),QUARTER			
NA01-68-550A	1	BASE, (W/O DETACHABLE TOP)			
00	INT-	NA0 BLACK			
88	INT-	NA1 TAN			
NA02-68-550A	1	OPTION, (W/DETACHABLE TOP)			
00	INT-	NA0 BLACK			
88	INT-	NA1 TAN			
68-865Q		FASTENER			
GJ21-68-885B	2				
00	INT-	NA0 NA2 NA1 BLACK			
88	INT-	NA1 TAN			
68-865U		CLIP,TRIM			
GJ21-68-865	4				