Parts Catalog

Mazda MX-5 MIATA U.S.A. ('93)

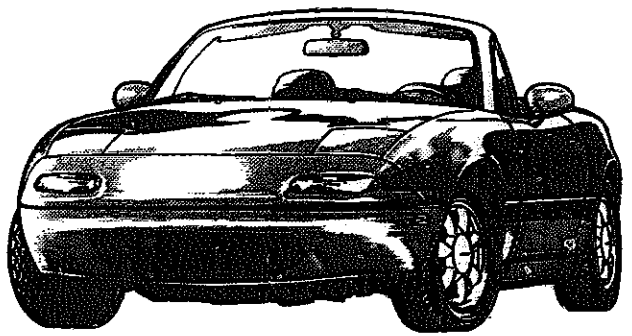

NA351•-400001-500000

Oct.'94 (FINAL)

Catalog No. AU-NA03-04

mazda

© 1994 Mazda Motor Corporation

LAYOUT OF CONTENTS / DISPOSITION TYPOGRAPHIQUE DE CONTENU / DISPOSICION DEL CONTENIDO / ANORDNUNG DES INHALTS

- The following is a typical example of the layout of contents on Mazda microfiche parts catalog.
- Voici un exemple typique de la disposition typographique de contenu dans les microfiches de catalogue des pièces de Mazda.
- El siguiente es un ejemplo típico de la disposición del contenido en una microficha del catálogo de repuestos de Mazda.
- Folgendes ist ein typisches Beispiel der Inhaltsanordnung des Mazda-Mikrofiche-Teilekatalogs.

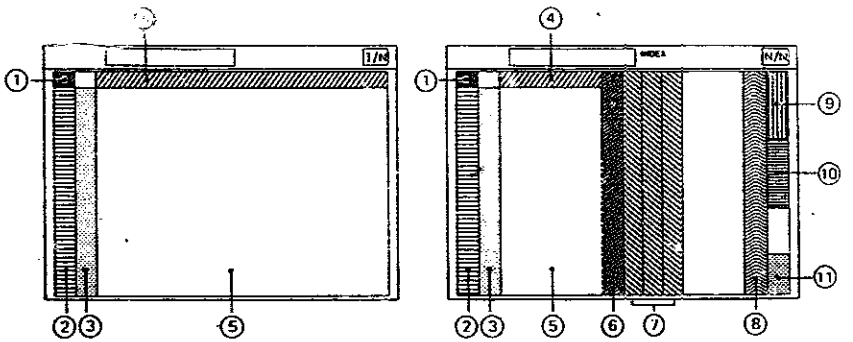

Remark : The items listed under ④ have been delated from each fiche since Dec. '93

① • Layout of contents
• Disposition Typographique de Contenu
• Disposición del contenido
• Anordnung des Inhalts

② • Pictorial Index
• Index par Schémas
• Indice Gráfico
• Illustrierter Index

③ • Master Section No. Index
• Index des Numéros des Sections Totale
• Indice del Número de la Sección Maestra
• Hauptabschnittsnummer-Index

④ ~~• Section No. Index for the Column~~
~~• Index des Numéros des Sections pour les Colonnes~~
~~• N° de la Sección para el Indice~~
~~• Abschnittsnummer-Index für die Spalte~~

⑤ • Illustration & Text
• Illustrations et Textes
• Ilustración y Texto
• Abbildung und Text

⑥ • Part No. Index
• Index des Numéros des Pièces
• Indice del N° de Pieza
• Teile-Nr.-Index

⑦ • Alphabetical Index
• Index Alphabétique
• Indice Alfabético
• Alphabetischer Index

⑧ • Model Identification
• Identification des Modèles
• Identificación del Modelo
• Modell-Kennzeichnung

⑨ • Vehicle Identification System
• Système d'Identification de Véhicule
• Sistema de Identificación de Vehículo
• Fahrzeug-Identifikationssystem

PICTORIAL INDEX

ENGINE (1/2)

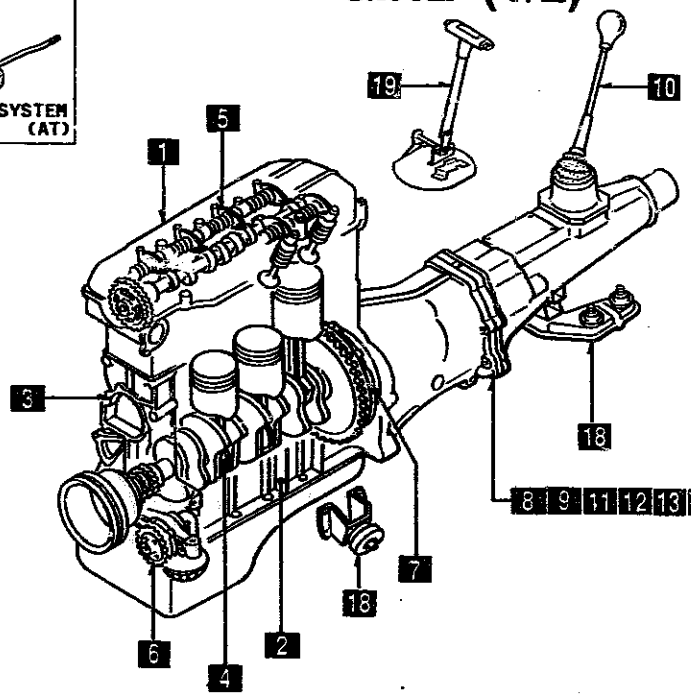

As this illustration is prepared to be applicable to all models, some parts are different in specifications from the parts listed in this parts Catalog.

1000

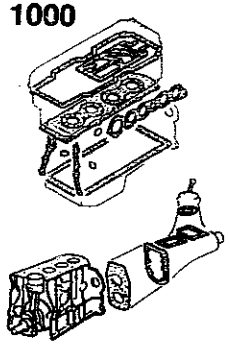

SHORT ENGINE & GASKET SETS

1 1010

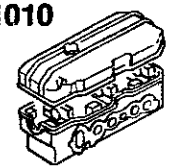

CYLINDER HEAD & COVER

2 1030

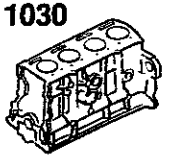

CYLINDER BLOCK

3 1040

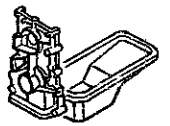

OIL PAN & TIMING COVER

4 1100

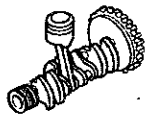

PISTON, CRANKSHAFT & FLYWHEEL

5 1200

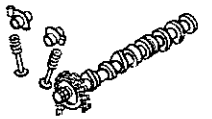

VALVE SYSTEM

19 4600

Given in Chassis Group

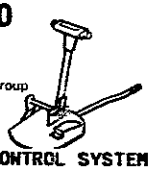

CHANGE CONTROL SYSTEM (AT)

6 1400

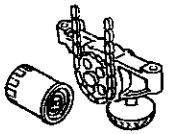

OIL PUMP & FILTER

18 3900

Given in Chassis Group

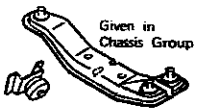

ENGINE & T/MISSION MOUNTINGS

7 1600

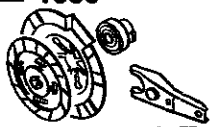

CLUTCH DISC & COVER (MANUAL)

17 1960



GASKET & SEAL KIT (AUTOMATIC)

8 1700

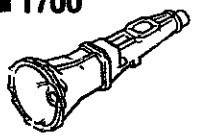

TRANSMISSION CASE (MANUAL)

16 1950



MANUAL LINKAGE SYSTEM (AUTOMATIC)

9 1710

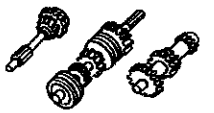

TRANSMISSION GEARS (MANUAL)

15 1940

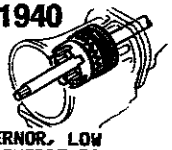

GOVERNOR, LOW & REVERSE PISTON (AUTOMATIC)

14 1930

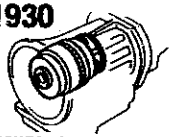

CLUTCHES & PLANETARY GEARS (AUTOMATIC)

13 1925



CONTROL VALVE (AUTOMATIC)

12 1920

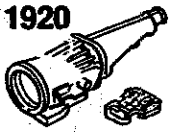

TRANSMISSION CASE & MAIN CONTROL SYSTEM (AUTOMATIC)

11 1910

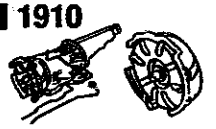

TORQUE CONVERTER, OIL PUMP & PIPINGS (AUTOMATIC)

10 1720

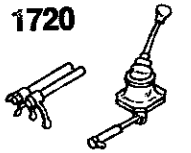

CHANGE CONTROL SYSTEM (MANUAL)

PICTORIAL INDEX

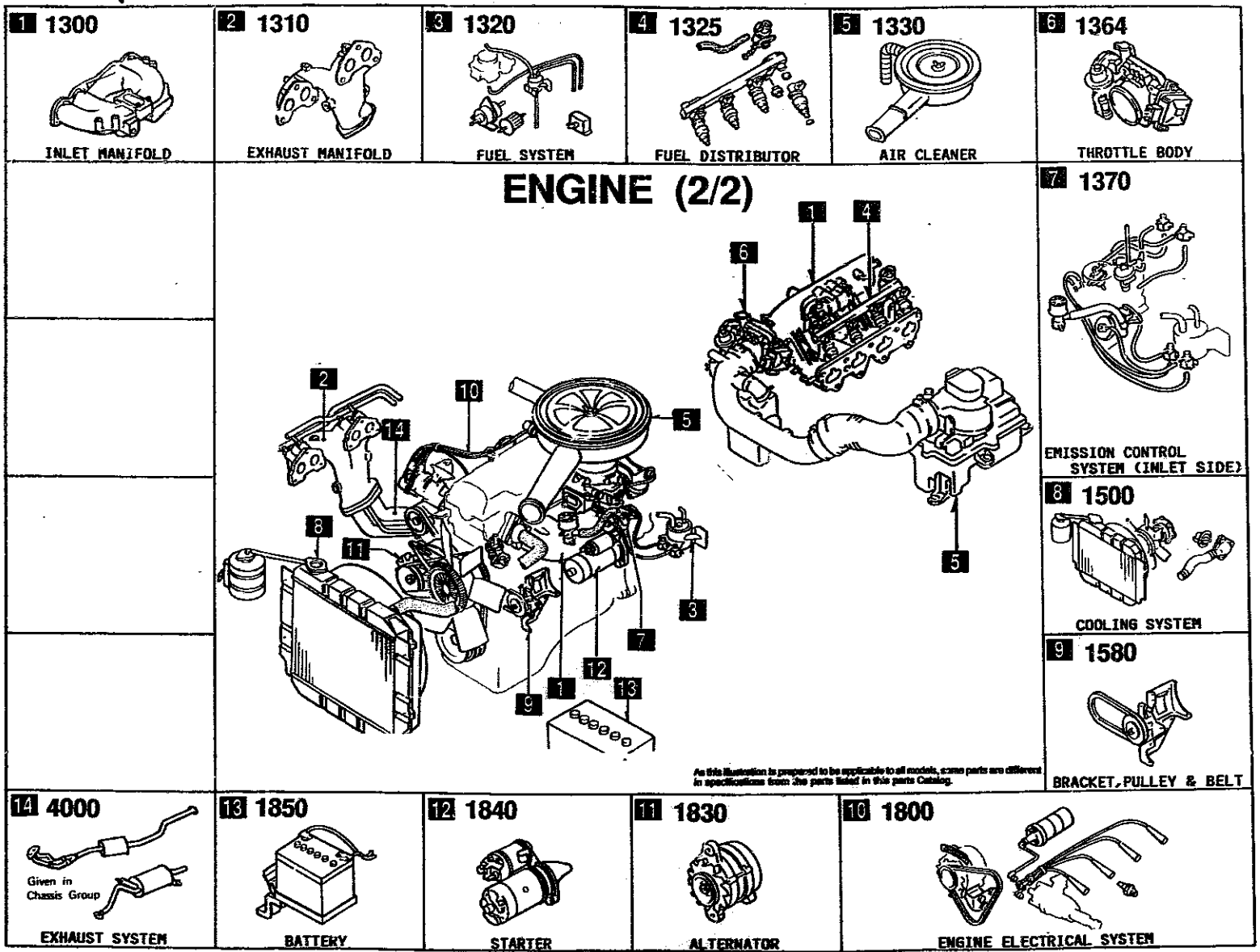

PICTORIAL INDEX

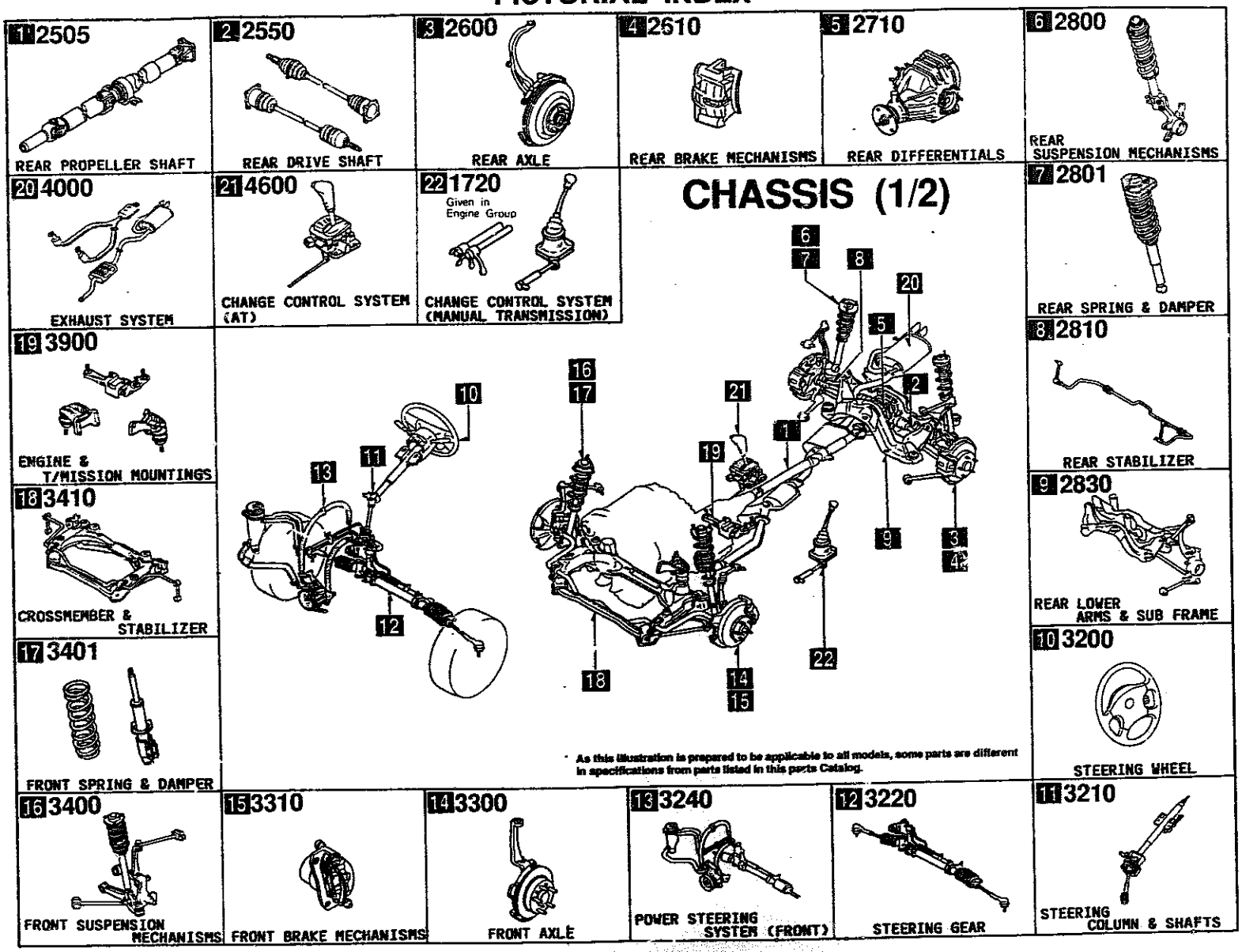

PICTORIAL INDEX

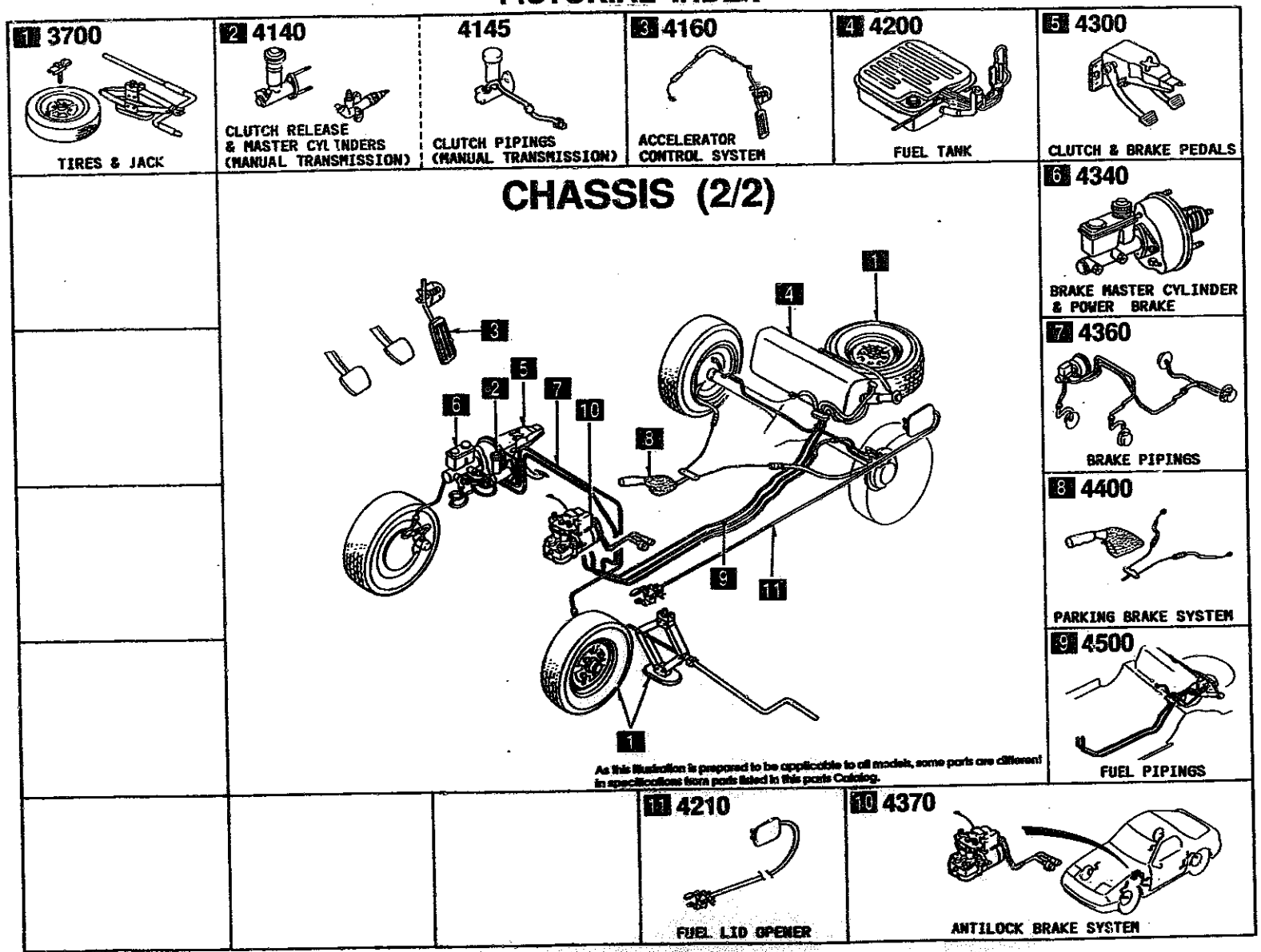

PICTORIAL INDEX

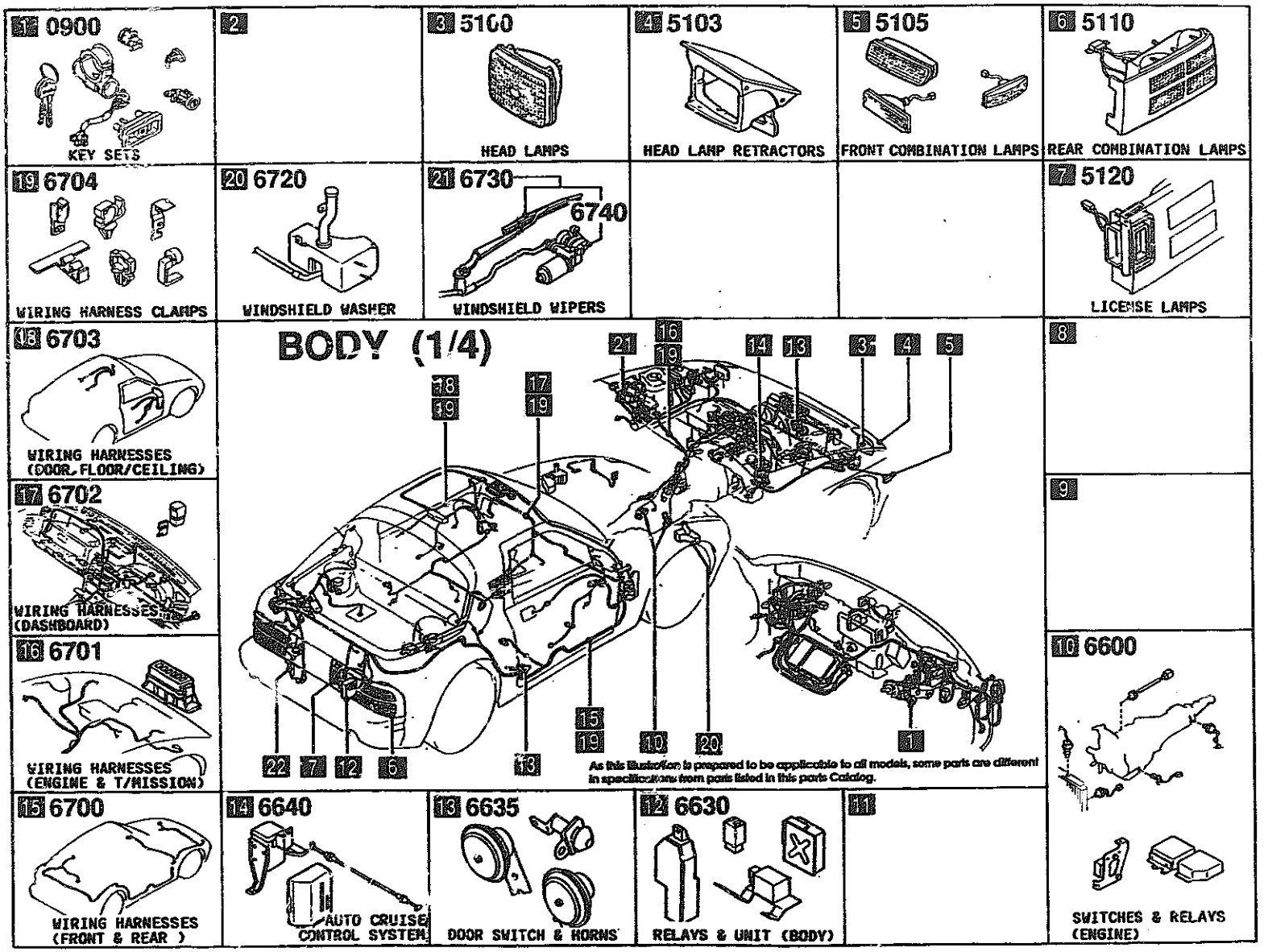

PICTORIAL INDEX

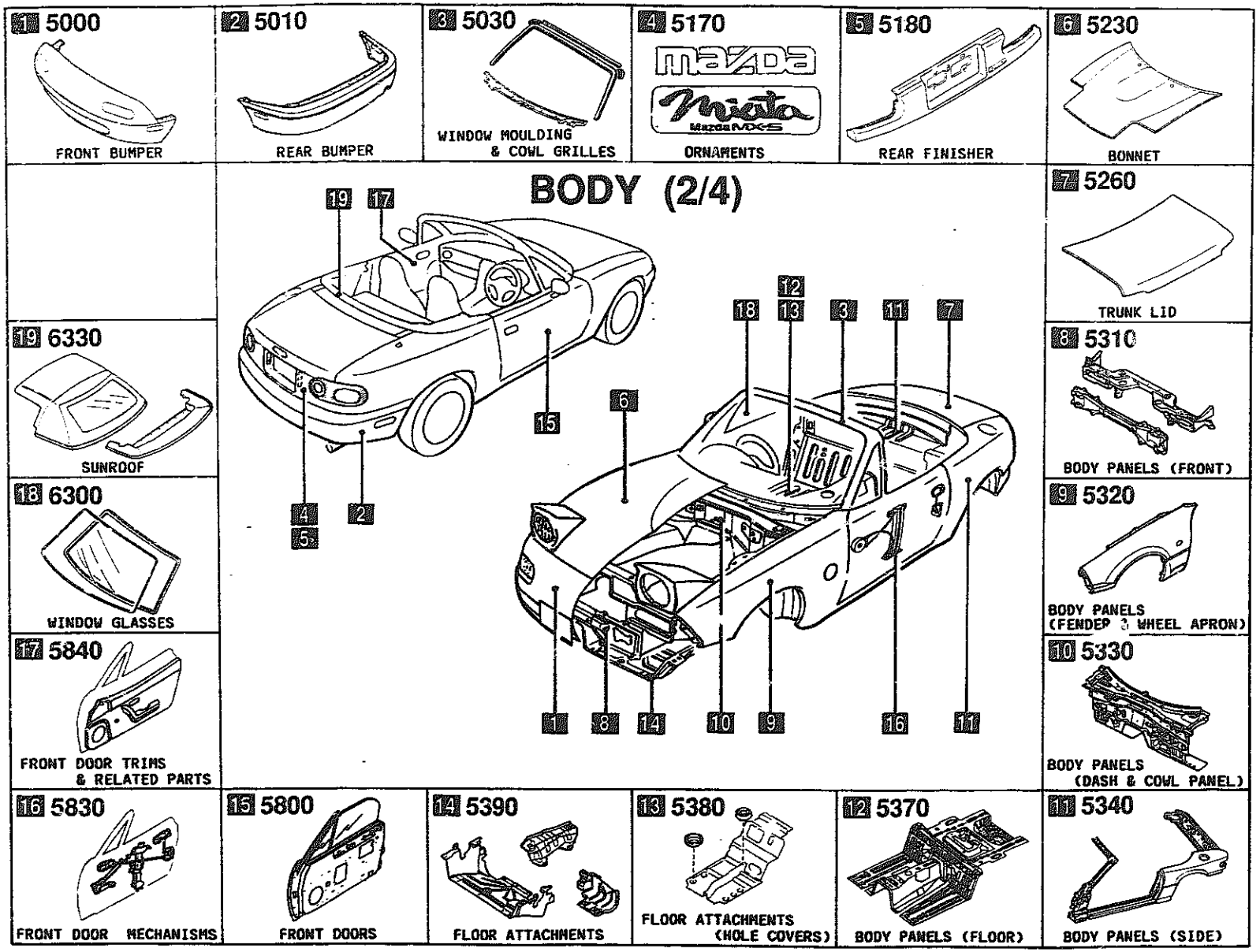

PICTORIAL INDEX

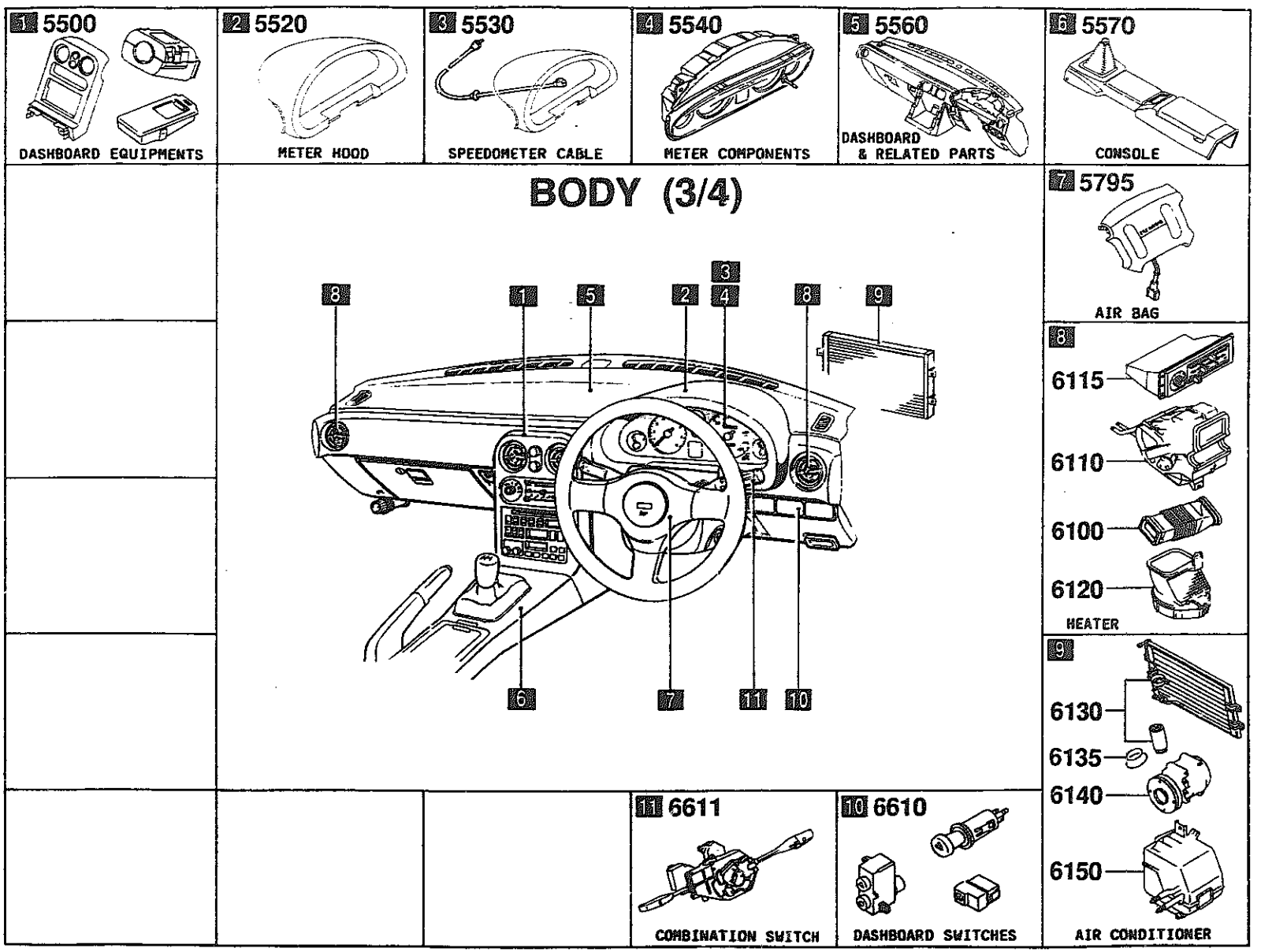

PICTORIAL INDEX

1 5580 — VENTILATOR

2 5700 — SEATS

3 5790 — SEAT BELTS

4 6680 — AUDIO SYSTEMS (RADIO & TAPE DECK)

5 6682 — AUDIO SYSTEMS (ANTENNA & SPEAKER)

6 6820 — FRONT HEADER TRIM & PILLAR TRIMS

7 6840 — TRIMS & SCUFF PLATES

8 6860 — FLOOR MATS & PADS

9 6870 — SERVICE TOOLS

10 6900 — VISORS, ASSIST HANDLES & MIRRORS

11 6930 — CAUTION PLATES & LABELS

12 7250 — QUARTER WINDOW & TRIMS

BODY (4/4)

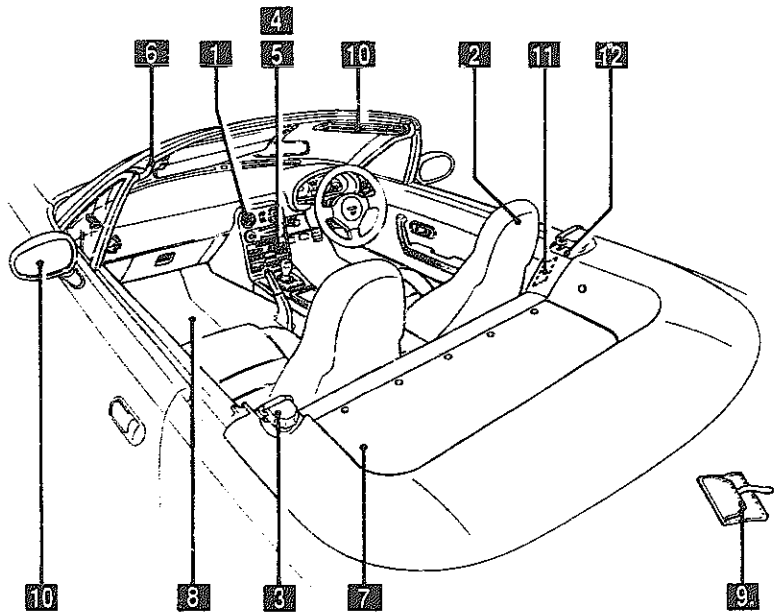

As this illustration is prepared to be applicable to all models, some parts are different in specifications from parts listed in this parts Catalog.

SECTION NAME INDEX (ENGINE)

LO.NO	SEC.NO	SECTION NAME	LO.NO	SEC.NO	SECTION NAME	LO.NO	SEC.NO	SECTION NAME
1-C03	1000	ENGINE & GASKET SETS						
1-E03	1010	CYLINDER HEAD & COVER						
1-H03	1030	CYLINDER BLOCK						
1-J03	1040	OIL PAN & TIMING COVER						
1-L03	1100	PISTON,CRANKSHAFT & FLYWHEEL						
1-C04	1200	VALVE SYSTEM						
1-E04	1300	INLET MANIFOLD						
1-F04	1310	EXHAUST MANIFOLD						
1-G04	1320	FUEL SYSTEM						
1-I04	1325	FUEL DISTRIBUTOR						
1-J04	1330	AIR CLEANER						
1-L04	1364	THROTTLE BODY						
1-M04	1370	EMISSION CONTROL SYSTEM (INLET SIDE)						
1-N04	1400	OIL PUMP & FILTER						
1-D05	1500	COOLING SYSTEM						
1-G05	1580	BRACKET,PULLEY & BELT						
1-C06	1600	CLUTCH DISC & COVER (MANUAL)						
1-D06	1700	TRANSMISSION CASE (MANUAL)						
1-F06	1710	TRANSMISSION GEARS(MANUAL)						
1-K06	1720	CHANGE CONTROL SYSTEM (MANUAL)						
1-N06	1800	ENGINE ELECTRICAL SYSTEM						
1-D07	1830	ALTERNATOR						
1-F07	1840	STARTER						
1-H07	1850	BATTERY						
1-I07	1910	TORQUE CONVERTER,OIL PUMP & PIPINGS (AUTOMATIC)						
1-L07	1920	TRANSMISSION CASE & MAIN CONTROL SYSTEM (AUTOMATIC)						
1-F08	1925	CONTROL VALVE (AUTOMATIC)						
1-J08	1930	CLUTCHES & PLANETARY GEARS (AUTOMATIC)						
1-E09	1940	GOVERNOR, LOW & REVERSE PISTON (AUTOMATIC)						
1-H09	1950	MANUAL LINKAGE SYSTEM (AUTOMATIC)						
1-J09	1960	GASKET & SEAL KIT (AUTOMATIC)						

CATLOG-NO= AUNA03-04

DATE. 1994-10

SECTION NAME INDEX (CHASSIS)

LO.NO	SEC.NO	SECTION NAME
1-C11	2505	REAR PROPELLER SHAFT
1-D11	2550	REAR DRIVE SHAFT
1-E11	2600	REAR AXLE
1-F11	2610	REAR BRAKE MECHANISMS
1-I11	2710	REAR DIFFERENTIALS (NORMAL DIFF.)
1-M11	2710 A	REAR DIFFERENTIALS (LIMITED SLIP DIFF.)
1-E12	2800	REAR SUSPENSION MECHANISMS
1-F12	2801	REAR SPRING & DAMPER
1-G12	2810	REAR STABILIZER
1-H12	2830	REAR LOWER ARMS & SUB FRAME
1-J12	3200	STEERING WHEEL
1-K12	3210	STEERING COLUMN & SHAFTS
1-L12	3220	STEERING GEAR (W/O POWER STEERING)
1-N12	3220 A	STEERING GEAR (W/ POWER STEERING)
1-E13	3240	POWER STEERING SYSTEM
1-G13	3300	FRONT AXLE (W/O ANTI LOCK BRAKE SYSTEM)
1-H13	3300 A	FRONT AXLE (ANTI LOCK BRAKE SYSTEM)
1-I13	3310	FRONT BRAKE MECHANISMS
1-K13	3400	FRONT SUSPENSION MECHANISMS
1-M13	3401	FRONT SPRING & DAMPER
1-N13	3410	CROSSMEMBER & STABILIZER
1-C14	3700	TIRES & JACK
1-C15	3900	ENGINE & T/MISSION MOUNTINGS
1-D15	4000	EXHAUST SYSTEM
1-F15	4140	CLUTCH RELEASE & MASTER CYLINDERS (MANUAL TRANSMISSION)
1-G15	4145	CLUTCH PIPINGS (MANUAL TRANSMISSION)
1-H15	4160	ACCELERATOR CONTROL SYSTEM
1-I15	4200	FUEL TANK
1-M15	4210	FUEL LID OPENER
1-N15	4300	CLUTCH & BRAKE PEDALS (MANUAL TRANSMISSION)
1-E16	4300A	BRAKE PEDALS (AUTOMATIC TRANSMISSION)
1-G16	4340	BRAKE MASTER CYLINDER & POWER BRAKE (W/O ANTI LOCK BRAKE SYSTEM)
1-I16	4340 A	BRAKE MASTER CYLINDER & POWER BRAKE (ANTI LOCK BRAKE SYSTEM)
1-K16	4360	BRAKE PIPINGS (W/O ANTI LOCK BRAKE SYSTEM)
1-M16	4360 A	BRAKE PIPINGS (ANTI LOCK BRAKE SYSTEM)
2-C03	4370	ANTILOCK BRAKE SYSTEM
2-E03	4400	PARKING BRAKE SYSTEM
2-G03	4500	FUEL PIPINGS
2-I03	4600	CHANGE CONTROL SYSTEM (AT)
LO.NO	SEC.NO	SECTION NAME

SECTION NAME INDEX (BODY)

LO.NO	SEC.NO	SECTION NAME
2-C05	0900	KEY SETS
2-E05	5000	FRONT BUMPER
2-H05	5010	REAR BUMPER
2-J05	5030	WINDOW MOULDING & COWL GRILLES
2-K05	5100	HEAD LAMPS
2-L05	5103	HEAD LAMP RETRACTORS
2-C06	5105	FRONT COMBINATION LAMPS
2-E06	5110	REAR COMBINATION LAMPS
2-H06	5120	LICENSE LAMPS
2-I06	5170	ORNAMENTS
2-J06	5180	REAR FINISHER
2-K06	5230	BONNET
2-M06	5260	TRUNK LID
2-N06	5310	FRONT PANELS
2-C07	5320	FENDER & WHEEL APRON PANELS
2-E07	5330	DASH & COWL PANELS
2-F07	5340	SIDE PANELS
2-K07	5370	FLOOR PANELS
2-N07	5380	FLOOR ATTACHMENTS (HOLE COVERS)
2-C08	5390	FLOOR ATTACHMENTS
2-C09	5500	DASHBOARD EQUIPMENTS
2-E09	5520	METER HOOD
2-F09	5530	SPEEDOMETER CABLE
2-G09	5540	METER COMPONENTS
2-I09	5560	DASHBOARD & RELATED PARTS
2-L09	5570	CONSOLE
2-C10	5580	VENTILATOR
2-E10	5700	SEATS
2-D11	5790	SEAT BELTS
2-E11	5795	AIR BAG
2-G11	5800	FRONT DOORS
2-J11	5830	FRONT DOOR MECHANISMS
2-N11	5840	FRONT DOOR TRIMS & RELATED PARTS
2-C13	6100	HEATER
2-D13	6110	HEATER UNIT COMPONENTS
2-E13	6115	HEATER CONTROLS COMPONENTS
2-G13	6120	HEATER BLOWER COMPONENTS
2-H13	6130	AIR CONDITIONER
2-M13	6135	O RING SET,PIPING
2-N13	6140	COMPRESSOR COMPONENTS (AIR CONDITIONER)
2-D14	6150	COOLING UNIT (AIR CONDITIONER)
2-E14	6300	WINDOW GLASSES
2-F14	6330	SUNROOF
2-D15	6600	SWITCHES & RELAYS (ENGINE)
2-G15	6610	DASHBOARD SWITCHES
2-H15	6611	COMBINATION SWITCH
2-I15	6630	RELAYS & UNIT (BODY)
2-K15	6635	DOOR SWITCH & HORNS
2-L15	6640	AUTO CRUISE CONTROL SYSTEM
2-M15	6680	AUDIO SYSTEMS (RADIO & TAPE DECK)
2-F16	6682	AUDIO SYSTEMS (ANTENNA & SPEAKER)
2-H16	6700	WIRING HARNESSES(FRONT & REAR)
2-J16	6701	WIRING HARNESSES(ENGINE & T/MISSION)
2-L16	6702	WIRING HARNESSES(DASHBOARD)
2-M16	6703	WIRING HARNESSES(DOOR,FLOOR/CEILING)
3-C03	6704	WIRING HARNESS CLAMPS
3-F03	6720	WINDSHIELD WASHER
3-J03	6730	WINDSHIELD WIPERS
3-L03	6740	WIPER MOTOR COMPONENTS(FRONT)
3-M03	6820	FRONT HEADER TRIM & PILLAR TRIMS
3-N03	6840	TRIMS & SCUFF PLATES
3-D04	6860	FLOOR MATS & PADS
3-G04	6870	SERVICE TOOLS
3-H04	6900	VISORS,ASSIST HANDLES & MIRRORS
3-K04	6930	CAUTION PLATES & LABELS
3-M04	7250	QUARTER WINDOW & TRIMS

10-271S

1-SEAL, VALVE ..... (16)
2-GASKET, HEAD COVER ..... (1)
3-GASKET, CYLINDER HEAD ..... (1)
4-GASKET, IN. MANIFOLD ..... (1)
5-GASKET, EX. MANIFOLD ..... (1)
6-GASKET, EX. MANIFOLD ..... (1)
7-GASKET, THERMOSTAT COVER ..... (2)
8-GASKET, OIL PAN ..... (1)
9-GASKET, OIL PAN ..... (1)
10-GASKET, T. B. COVER LWR ..... (1)
11-GASKET (L) ..... (1)
12-GASKET (INN), TIMING BELT (L) ..... (1)
13-GASKET (C), TIMING BELT (L) ..... (1)
14-GASKET, T. BELT COVER-C ..... (1)
15-RUBBER, SEAL-SEAL PLATE ..... (1)
16-SEAL, OIL ..... (1)
17-SEAL, OIL ..... (2)
18-SEAL, OIL-CRANKSHAFT ..... (1)
19-GASKET, OIL PUMP ..... (1)
20-GASKET, WATER PUMP ..... (1)
21-GASKET, W. PUMP INLET ..... (1)
22-RING, "O"-WATER BY-PASS ..... (1)

1-SEAL, VALVE ..... (16)
2-GASKET, HEAD COVER ..... (1)
3-GASKET, CYLINDER HEAD ..... (1)
4-GASKET, IN. MANIFOLD ..... (1)
5-GASKET, EX. MANIFOLD ..... (1)
6-GASKET, EX. MANIFOLD ..... (1)
7-GASKET, THERMOSTAT COVER ..... (2)

10-235S

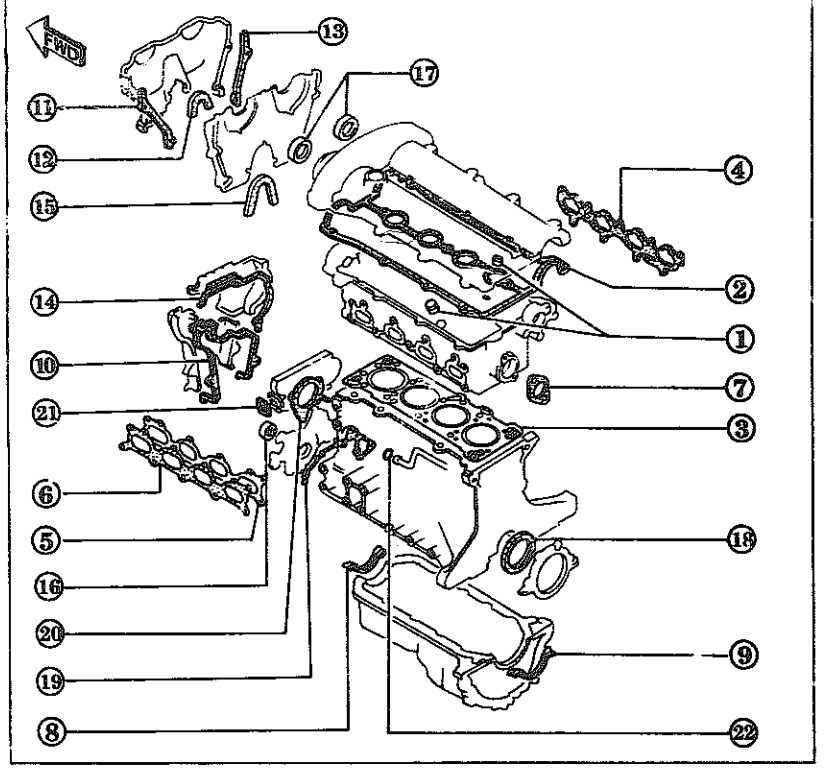

AURA03

(CONT'D)



23-800

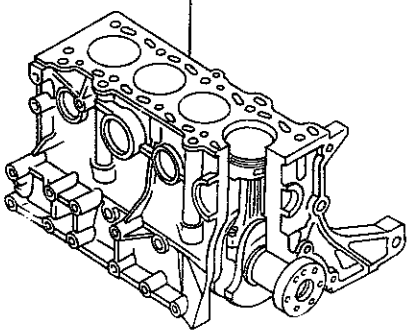

02-300

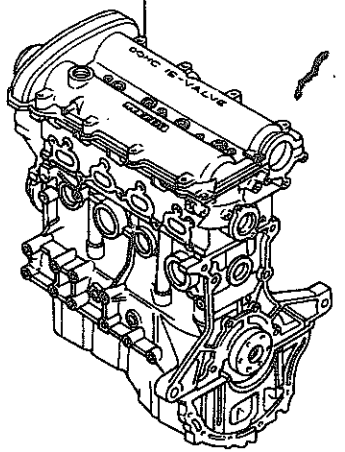

AURA03

(THIS ILLUSTRATION CONSISTS OF 2 PAGES)

10-271S

1-SEAL, VALVE ..... (16)
2-GASKET, HEAD COVER ..... (1)
3-GASKET, CYLINDER HEAD ..... (1)
4-GASKET, IN. MANIFOLD ..... (1)
5-GASKET, EX. MANIFOLD ..... (1)
6-GASKET, EX. MANIFOLD ..... (1)
7-GASKET, THERMOSTAT COVER ..... (2)
8-GASKET, OIL PAN ..... (1)
9-GASKET, OIL PAN ..... (1)
10-GASKET, T. B. COVER LWR ..... (1)
11-GASKET (L) ..... (1)
12-GASKET (INN), TIMING BELT (L) ..... (1)
13-GASKET (C), TIMING BELT (L) ..... (1)
14-GASKET, T. BELT COVER-C ..... (1)
15-RUBBER, SEAL-SEAL PLATE ..... (1)
16-SEAL, OIL ..... (1)
17-SEAL, OIL ..... (2)
18-SEAL, OIL-CRANKSHAFT ..... (1)
19-GASKET, OIL PUMP ..... (1)
20-GASKET, WATER PUMP ..... (1)
21-GASKET, W. PUMP INLET ..... (1)
22-RING, "O"-WATER BY-PASS ..... (1)

10-235S

1-SEAL, VALVE ..... (16)
2-GASKET, HEAD COVER ..... (1)
3-GASKET, CYLINDER HEAD ..... (1)
4-GASKET, IN. MANIFOLD ..... (1)
5-GASKET, EX. MANIFOLD ..... (1)
6-GASKET, EX. MANIFOLD ..... (1)
7-GASKET, THERMOSTAT COVER ..... (2)

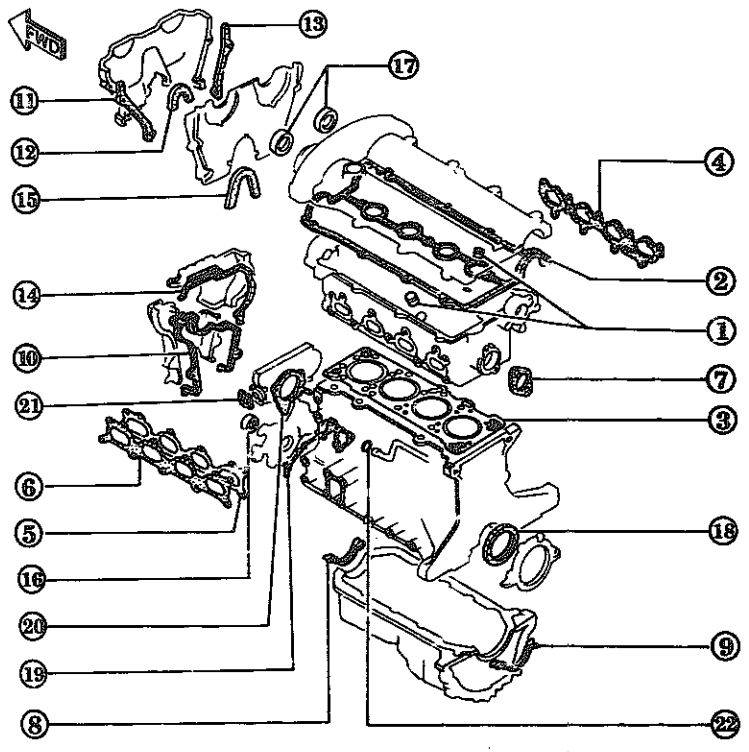

AUNA03

(CONT'D)

PART NO.	QTY	MODEL/RESTRICTION	MODEL/RESTRICTION	MODEL/RESTRICTION	FROM-TO
02-300		ENGINE,PARTIAL			
※B61P-02-300	1	(MT)			3701-
※B64J-02-300	1	(AT)			3701-
10-235S		GASKET SET,CYL. HEAD			
8AN1-10-235A	1				
10-271S		GASKET SET,ENGINE			
8AN1-10-271B	1	NON ASBESTOS			
23-800		ENGINE,SHORT			
B64E-02-200D	1	(MT)			
B64J-02-200B	1	(AT)			

3701 NA351※-423706

CAT. AUNA03-04

1994-10

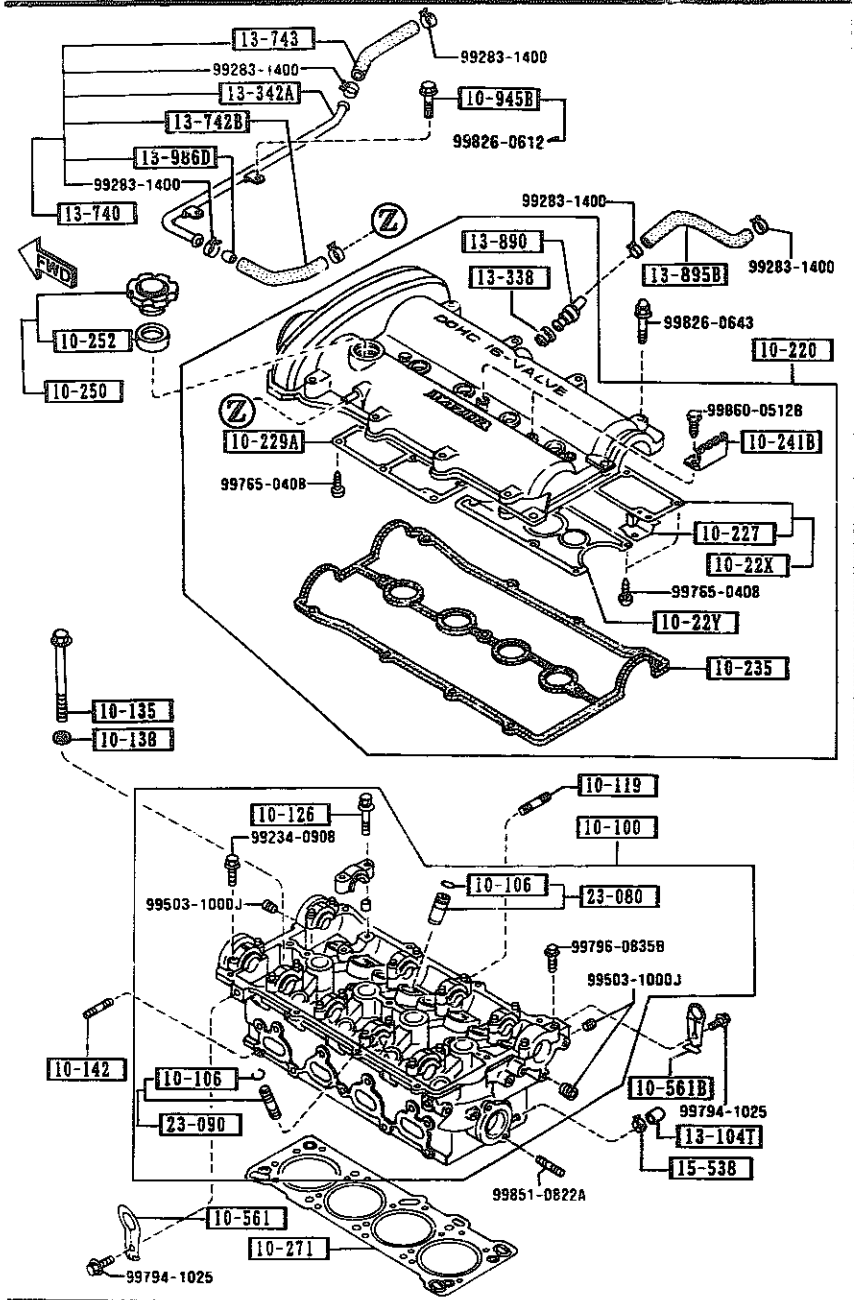

AUNA03

PART NO.	QTY	MODEL/RESTRICTION	MODEL/RESTRICTION	MODEL/RESTRICTION	FROM-TO
10-100		HEAD,CYLINDER			
B61P-10-100D A (B61P-10-100F)	1				-3601
B61P-10-100F	1				3601-
10-106		CLIP,VALVE GUIDE			
B660-10-106	16				
10-119		STUD			
FE4J-13-146	3				
10-126		BOLT,CAMSHAFT CAP			
B660-10-126	20				
10-135		BOLT,CYLINDER HEAD			
B660-10-135A	10				
10-138		WASHER,PLAIN CYL. HEAD			
B630-10-138A	10				
10-142		STUD,EX. MANIFOLD			
B661-10-104	9				
10-22X		PLATE,OIL BAFFLE-IN. SIDE			
B61P-10-22X	2				
10-22Y		PLATE,OIL BAFFLE-EX.			
B6S7-10-22Y	1				
10-220		COVER,CYLINDER HEAD			
B61P-10-210D	1				
10-227		PLATE,BAFFLE			
B61P-10-227	1				
10-229A		PLATE,OIL BAFFLE			
B6S7-10-225	2				
10-235		GASKET,HEAD COVER			
B61P-10-235A	1	NON ASBESTOS			

3601 NA351#-422220

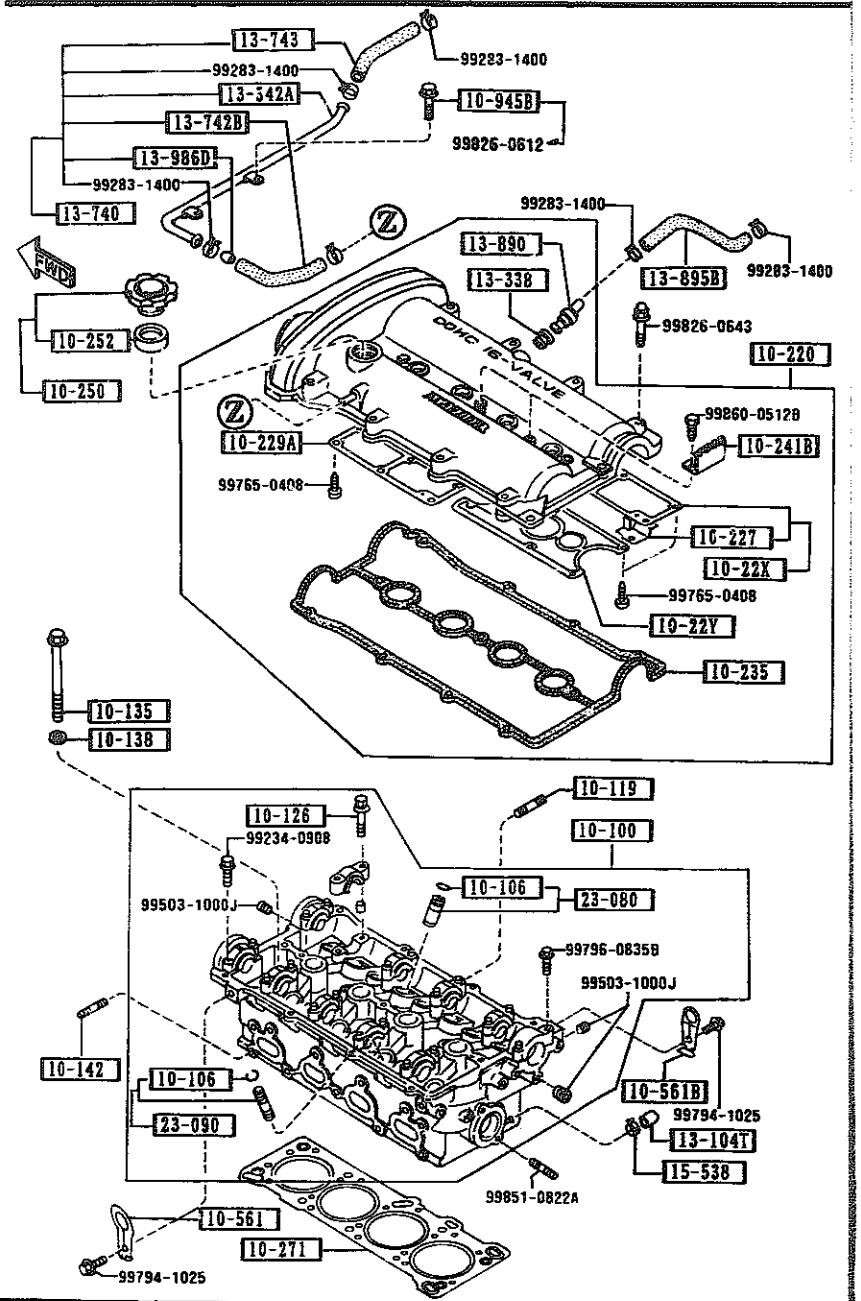

AUNA03

PART NO.	QTY	MODEL/RESTRICTION	MODEL/RESTRICTION	MODEL/RESTRICTION	FROM-TO
10-241B B660-10-241	2	PROTECTOR.HT.CORD-S.TANK			
10-250 0453-10-250A	1	CAP,OIL FILLER			
10-252 0324-10-252	1	GASKET			
10-271 B6F4-10-271A	1	GASKET,CYLINDER HEAD NON ASBESTOS			
10-561 B660-10-561	1	HANGER,ENGINE			
10-561B B61P-10-565	1	HANGER,ENGINE-REAR			
10-958 B61P-13-366	2	BOLT			-3401
13-104T FEA7-13-104	1	CAP,SEALING			
13-338 E301-13-338A	1	SEAL,RUBBER			
13-342A B61P-13-74XA	1	PIPE,VENTILATION			
13-740 B61P-13-740A	1	HOSE,VENT.-PURGE CON T. V.			
13-742B B61P-13-742A	1	HOSE,VENTILATION			
13-743 B61P-13-743A	1	HOSE,VENTILATION			
13-890		VALVE,P.C.V.			

3401 NA351#-418882

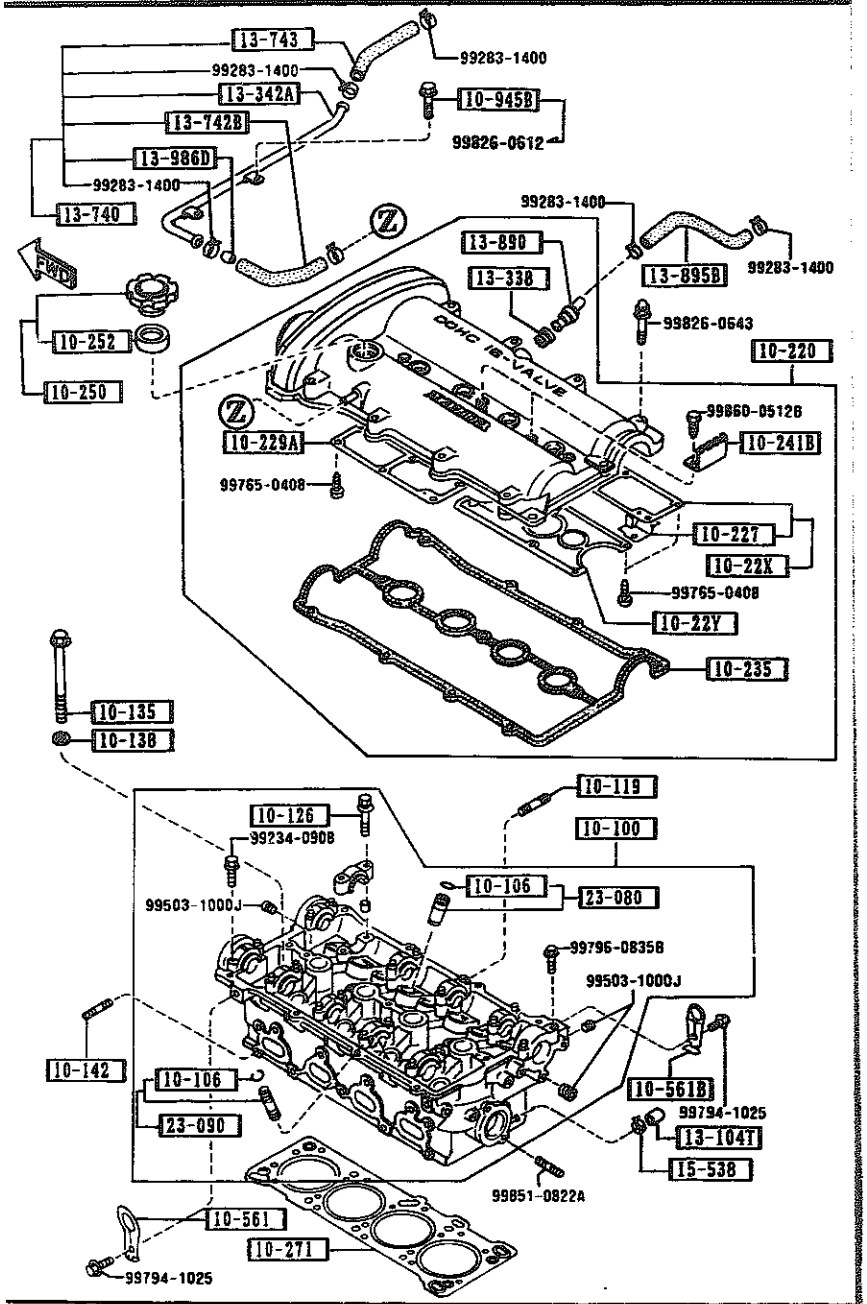

AUNA03

PART NO.	QTY	MODEL/RESTRICTION	MODEL/RESTRICTION	MODEL/RESTRICTION	FROM-TO
CONT'D					
BP05-13-890	1				
13-895B		HOSE,P.C.V.			
B61P-13-741	1				
13-986D		ORIFICE			
B61P-13-986	1				
15-538		CLAMP,WATER HOSE			
JF02-15-538	1				
23-080		GUIDE,VALVE			
B6Z0-10-280	8				
23-090		GUIDE,VALVE			
B6Z0-10-290	8				

1030 CYLINDER BLOCK

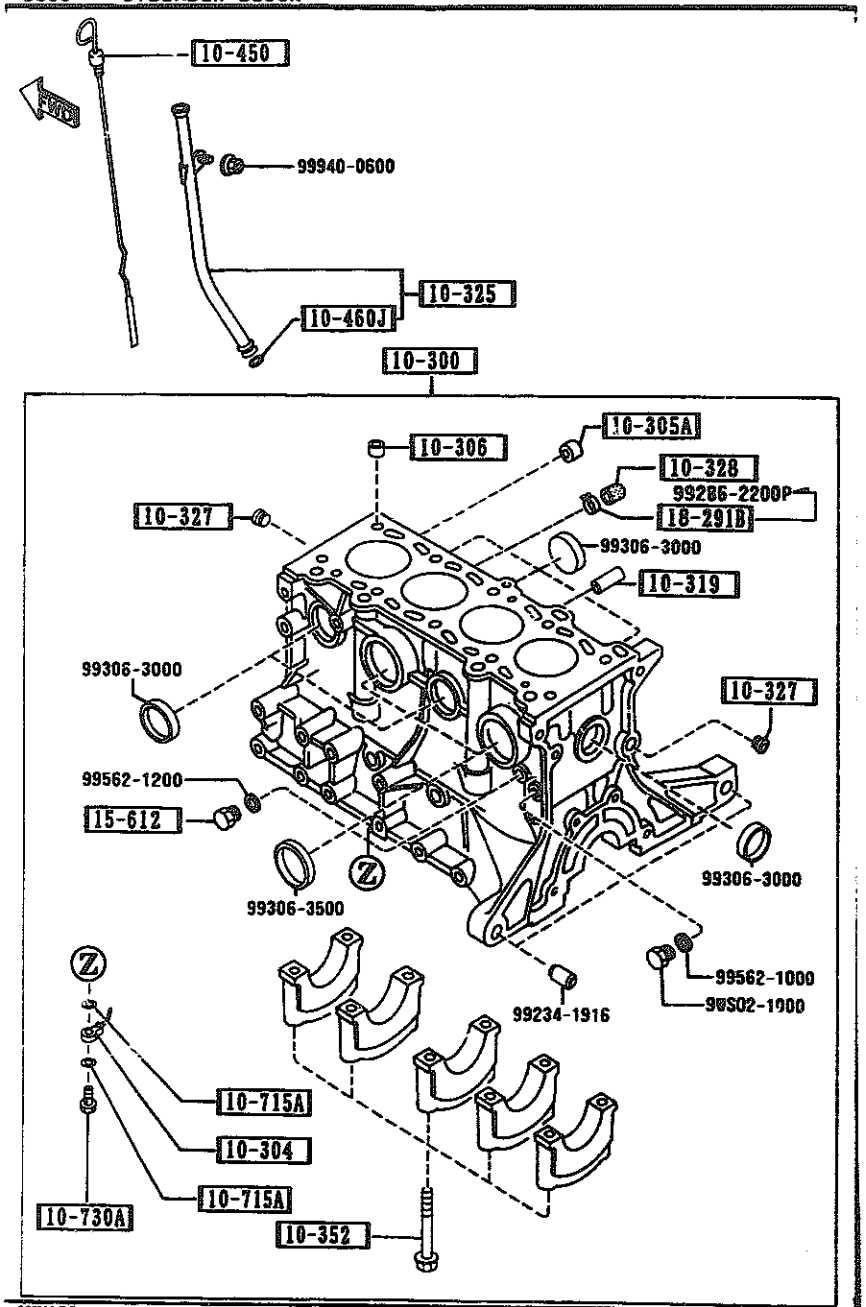

AUNA03

PART NO.	QTY	MODEL/RESTRICTION	MODEL/RESTRICTION	MODEL/RESTRICTION	FROM-TO
10-300		BLOCK,CYLINDER			
B64J-10-300 AN(B64J-10-300A)	1				-3401
B64J-10-300A	1				3401-
10-304		JET,OIL			
B660-10-580A	4				
10-305A		PLUG			
B366-10-305	1				
10-306		PIN,TUBULAR			
B630-10-306	2				
10-319		JOINT			
B630-10-319	1				
10-325		PIPE,OIL LEVEL GAUGE			
B61P-10-440	1				
10-327		PLUG,BLIND			
0221-10-327	2				
10-328		COVER,BLIND-CYL. BLOCK			
B660-10-328	1				
10-352		BOLT,BEARING CAP			
B630-10-352	10				
10-450		GAUGE,OIL LEVEL			
B61P-10-450C	1				
10-460J		RING,'O'			
99541-00907	1				
10-715A		GASKET,OIL JET			
SE01-10-715	8				
10-730A		VALVE,OIL JET			
SE01-10-730	4				

3401 NA351#-418882

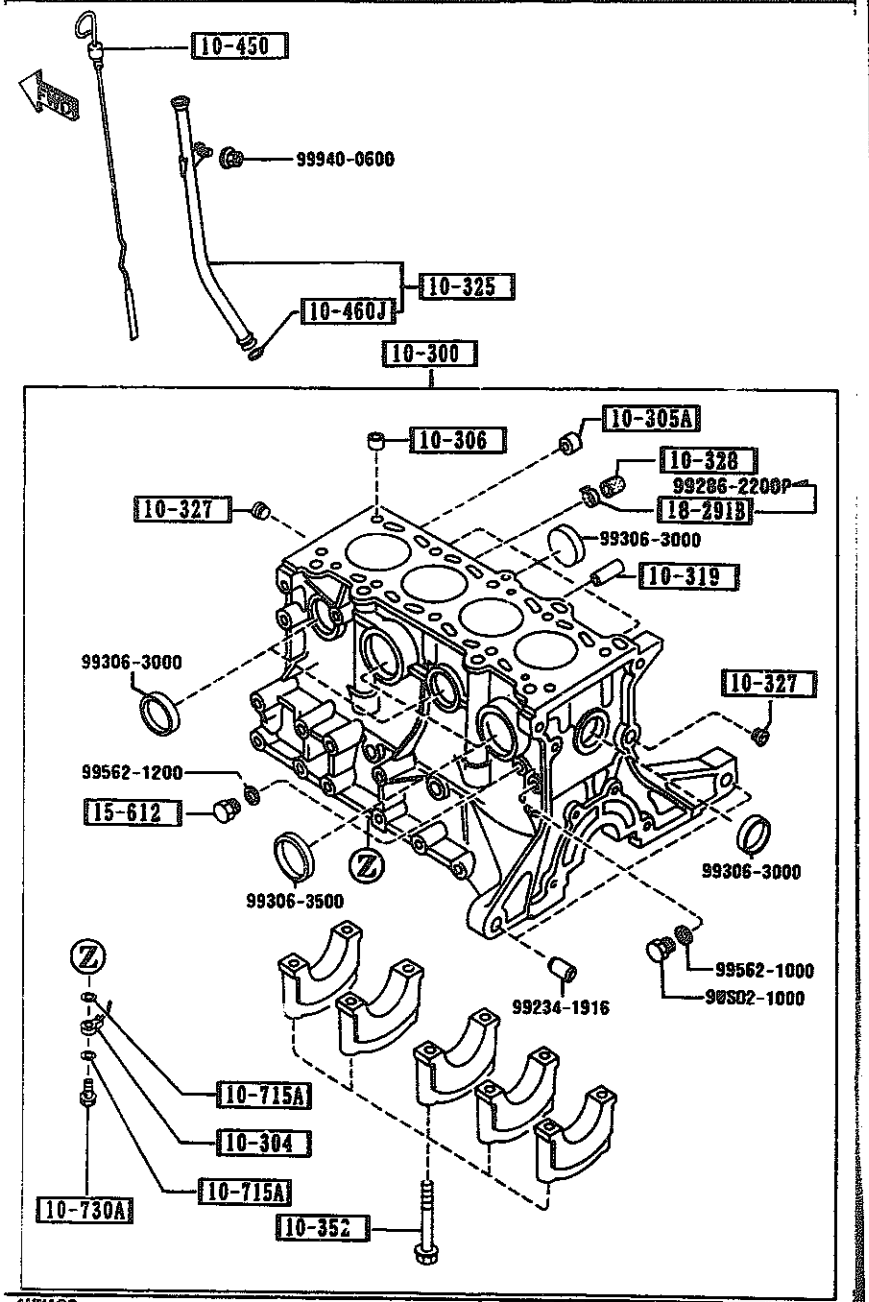

AUNA03

PART NO.	QTY	MODEL/RESTRICTION	MODEL/RESTRICTION	MODEL/RESTRICTION	FROM-TO
15-612		PLUG			
SE01-15-612	1				
18-2918		CLAMP,HOSE			
R230-15-538	1				-3401

3401 NA351*-418882

CAT. AUNA03-04

1994-10

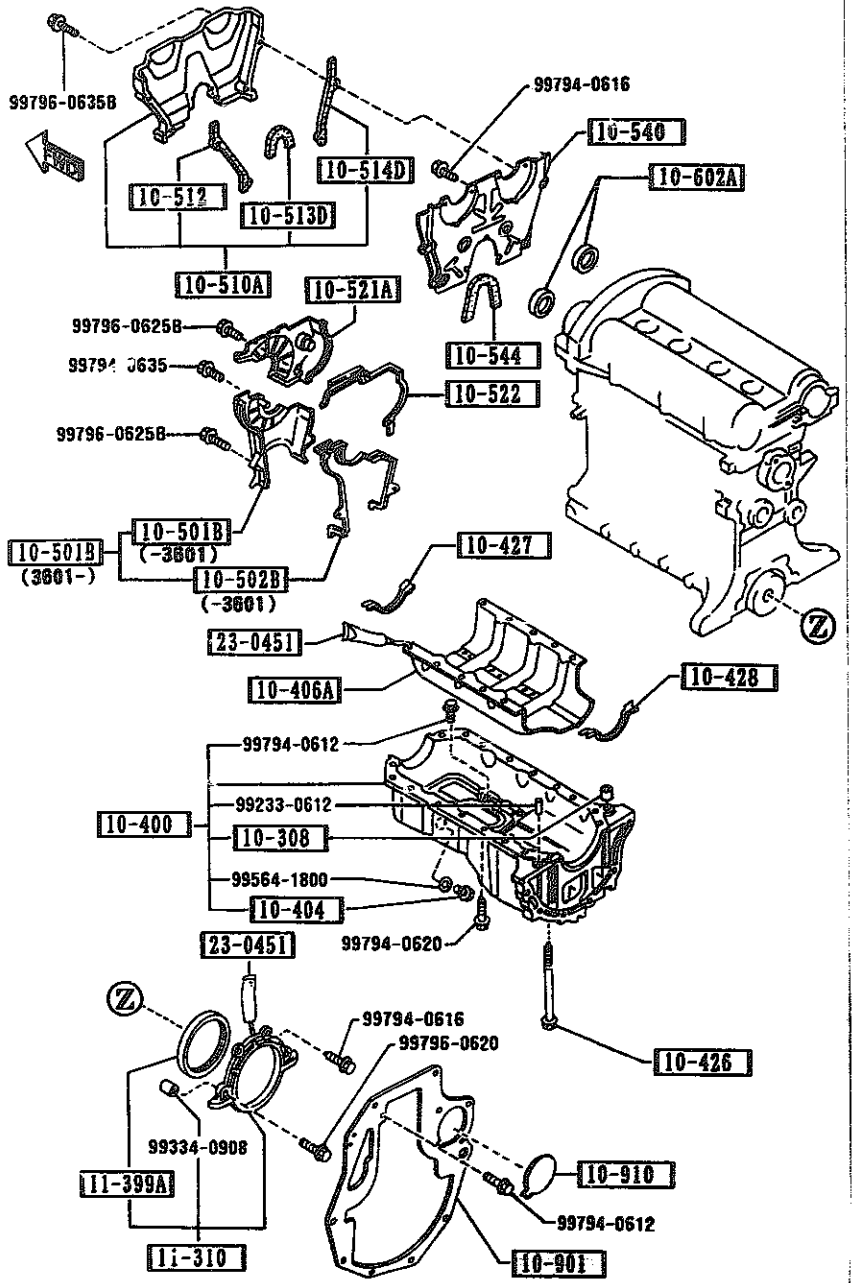

AUNA03

1040 -1 OIL PAN & TIMING COVER

PART NO.	QTY	MODEL/RESTRICTION	MODEL/RESTRICTION	MODEL/RESTRICTION	FROM-TO
10-308		PIN,TUBULAR			
B6F6-10-308	1				
10-400		PAN,OIL			
B6Y0-10-405C	1				
10-404		PLUG,DRAIN			
B6S7-10-404A	1				
10-406A		PLATE,OIL BAFFLE-CYL. BLK			
B61P-10-40YA	1				
10-426		BOLT			
B6S7-10-465	2				
10-427		GASKET,OIL PAN			
B6F4-10-427	1				
10-428		GASKET,OIL PAN			
B6F4-10-428	1				
10-501B		COVER,TIMING BELT-LWR			
B660-10-500E A (B660-10-501E)	1				-3601
B660-10-501E	1				3601-
10-502B		GASKET,T.B.COVER LWR			
B660-10-502B	1	NON ASBESTOS			-3601
10-510A		COVER(UP.),TIMING CHAIN			
B61P-10-510	1				
10-512		GASKET(L)			
B61P-10-512	1	NON ASBESTOS			
10-513D		GASKET(INN),TIMING BELT(L)			
B61P-10-513	1	NON ASBESTOS			
10-514D		GASKET(C),TIMING BELT(L)			

3601 NA351#-422220

CAT. AUNA03-04

1994-10

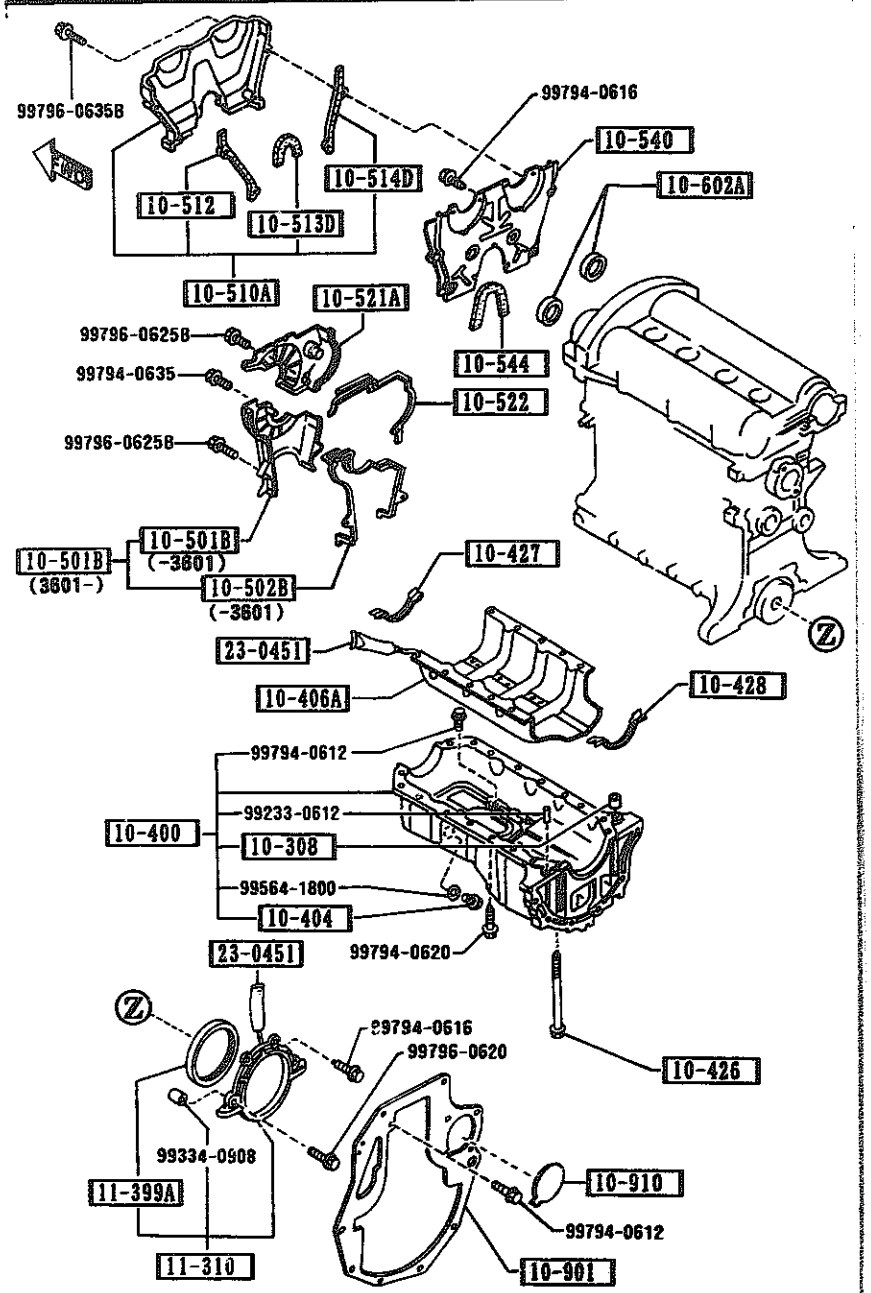

AUNA03

PART NO.	QTY	MODEL/RESTRICTION	MODEL/RESTRICTION	MODEL/RESTRICTION	FROM-TO
CONT'D					
B61P-10-514	1	NON ASBESTOS			
10-521A		COVER,TIMING BELT-C.			
B660-10-520B	1				
10-522		GASKET,T.BELT COVER-C.			
B660-10-522	1	NON ASBESTOS			
10-540		PLATE,SEAL-T.BELT COVER U			
B61P-10-540C	1				
10-544		RUBBER,SEAL-SEAL PLATE			
B61P-10-544	1				
10-602A		SEAL,OIL			
F285-10-602	2				-2B04
FS05-10-602A	2				2B04-
10-901		PLATE,END			
B61P-10-901A	1	(MT)			
B64J-10-901	1	(AT)			
10-910		COVER,END PLATE			
B64J-10-903	1	(AT)			
11-310		COVER,REAR			
B366-11-310C	1				
11-399A		SEAL,OIL-CRANKSHAFT			
BP05-11-312	1				
23-0451		TUBE,SILICON			
8527-77-739	1				

2B04 NA351✱-405572

CAT. AUNA03-04

1994-10

1100 PISTON,CRANKSHAFT & FLYWHEEL

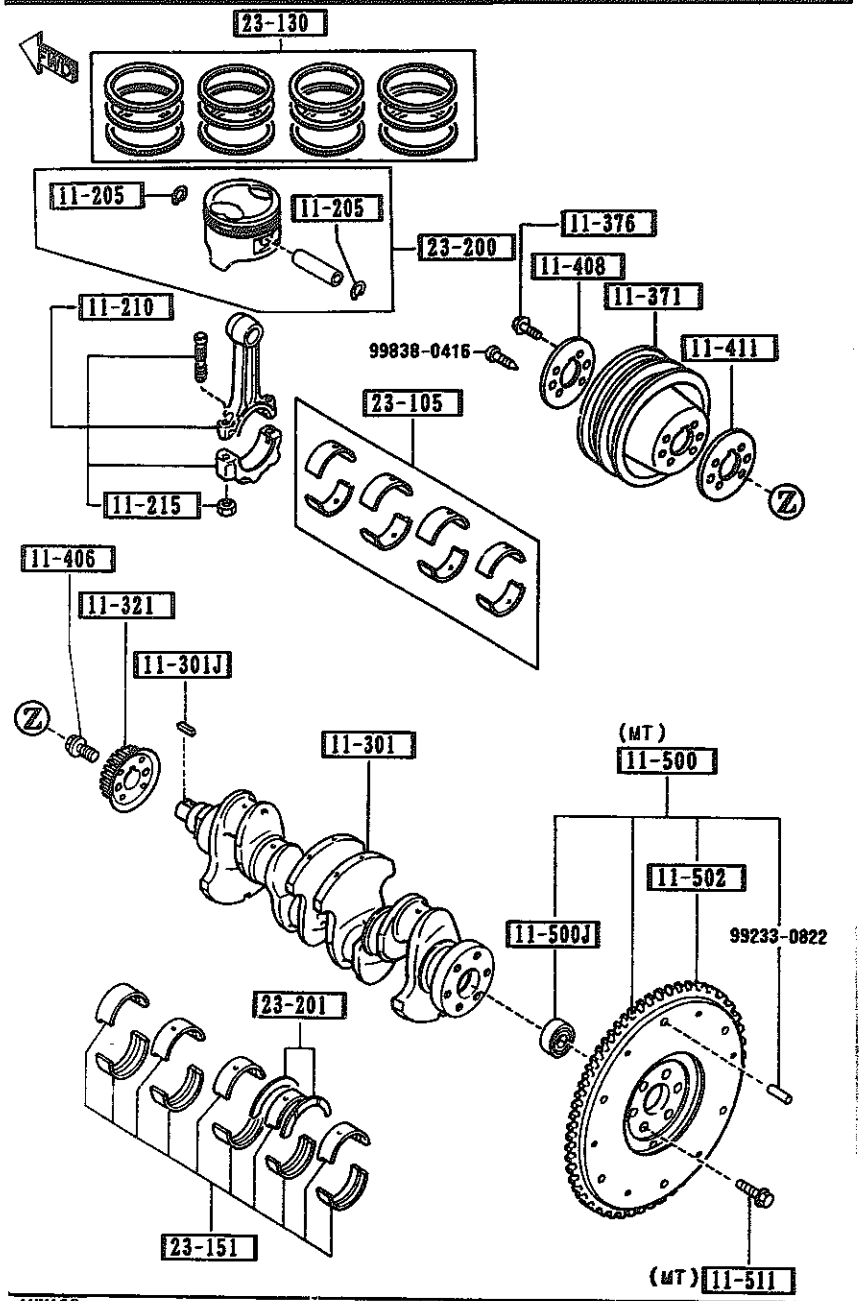

PART NO.	QTY	MODEL/RESTRICTION	MODEL/RESTRICTION	MODEL/RESTRICTION	FROM-TO
11-205		CLIP			
0221-11-205	8				
11-210		ROD,CONNECTING			
B6S7-11-210D AN(B6S7-11-210E)	4				-3610
*B6S7-11-210E	4				3610-
11-215		NUT,CONNECTING ROD			
B6S7-11-215A	8				
11-301		CRANKSHAFT			
B6S7-11-300 A (B6S7-11-300A)	1				-3701
B6S7-11-300A	1				3701-
11-301J		KEY,WOODRUFF-PULLEY			
B3C7-11-317	1				
11-321		PULLEY,TIMING BELT			
B3C7-11-321	1				
11-371		PULLEY,CRANKSHAFT			
B6S8-11-401	1				
11-376		BOLT,PULLEY			
JF01-11-405	4				
11-406		BOLT,LOCK-C.SHAFT PULLEY			
B3C7-11-406	1				
11-408		PLATE,CRANKSHAFT PULLEY			
B3C7-11-408	1				
11-411		BOSS,PULLEY			
B3C7-11-400	1				
11-500		WHEEL,FLY			
B61P-11-500	1	(MT)			
11-500J		BEARING,BALL-FLY WHEEL			

3610 NA351*-422744
3701 NA351*-423706

1100 PISTON,CRANKSHAFT & FLYWHEEL

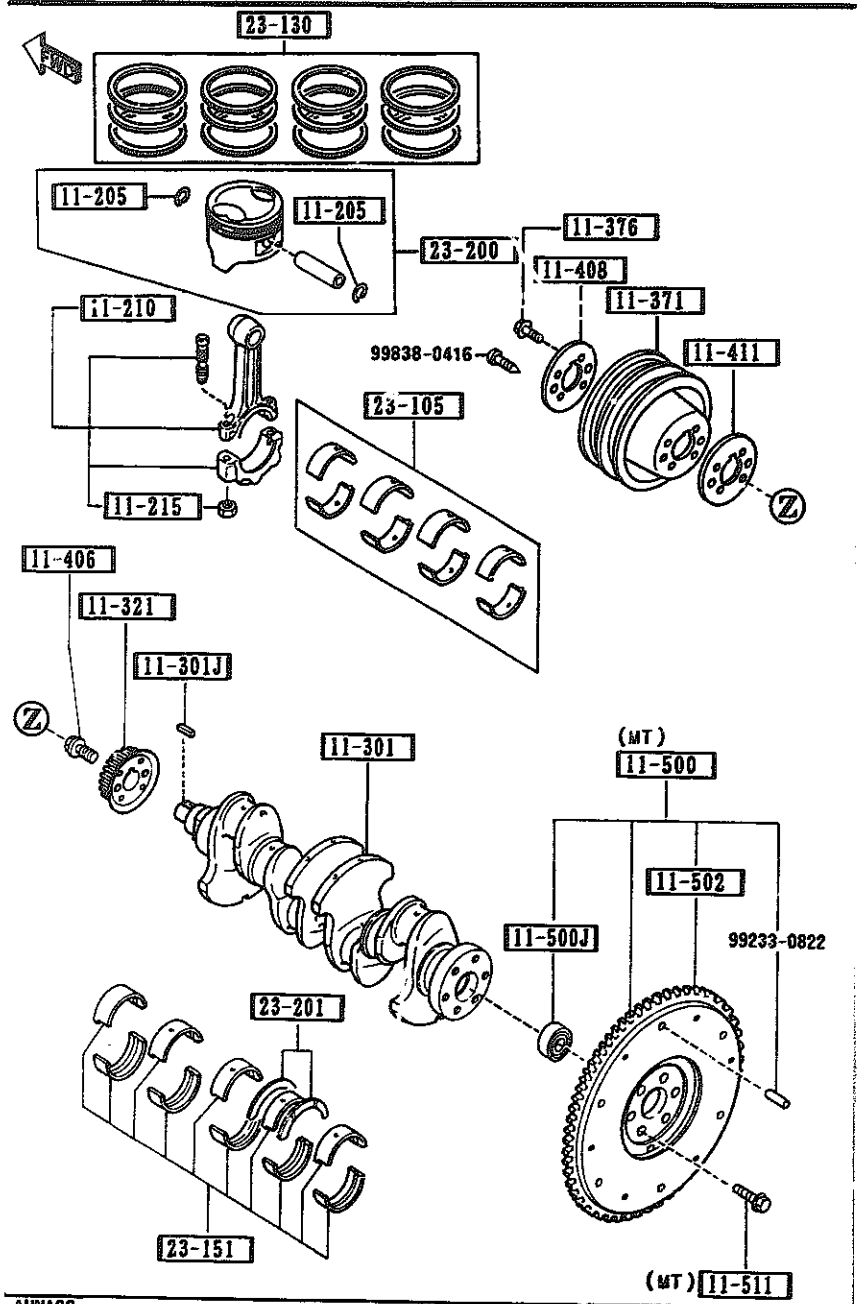

AUNA03

PART NO.	QTY	MODEL/RESTRICTION	MODEL/RESTRICTION	MODEL/RESTRICTION	FROM-TO
CONT'D					
F801-11-303	1	(MT)			
11-502		GEAR,RING-FLY WHEEL			
B367-11-502	1	(MT)			
11-511		BOLT,LOCK-FLYWHEEL			
F201-11-511 A (F201-11-511A)	6				-3401
F201-11-511A	6	(MT)			3401-
23-105		METAL SET,CONN.ROD			
B6Y1-11-SE0	1	STD.			
B6Y1-11-SFX	1	O.S. 0.50			
B6Y1-11-SFY	1	O.S. 0.75			
B6Y1-11-SF0	1	O.S. 0.25			
23-130		RING SET,PISTON			
B6Y3-11-SC0A	1	STD. (AT)			
B6Y4-11-SC0B	1	STD. (MT)			
B6Y3-11-SDXA	1	O.S. 0.50 (AT)			
B6Y4-11-SDXB	1	O.S. 0.50 (MT)			
B6Y3-11-SD0A	1	O.S. 0.25 (AT)			
B6Y4-11-SD0B	1	O.S. 0.25 (MT)			
23-151		METAL SET,MAIN BRG.			
B6Y2-11-SG0	1	STD.			
B6Y1-11-SHX	1	O.S. 0.50			
B6Y1-11-SH0	1	O.S. 0.25			
23-200		PISTON SET			
B6Z2-11-SA0C	4	STD. (MT)			

3401 NA35[illegible]-418882

CAT. AUNA03-04

1994-10

1100 PISTON,CRANKSHAFT & FLYWHEEL

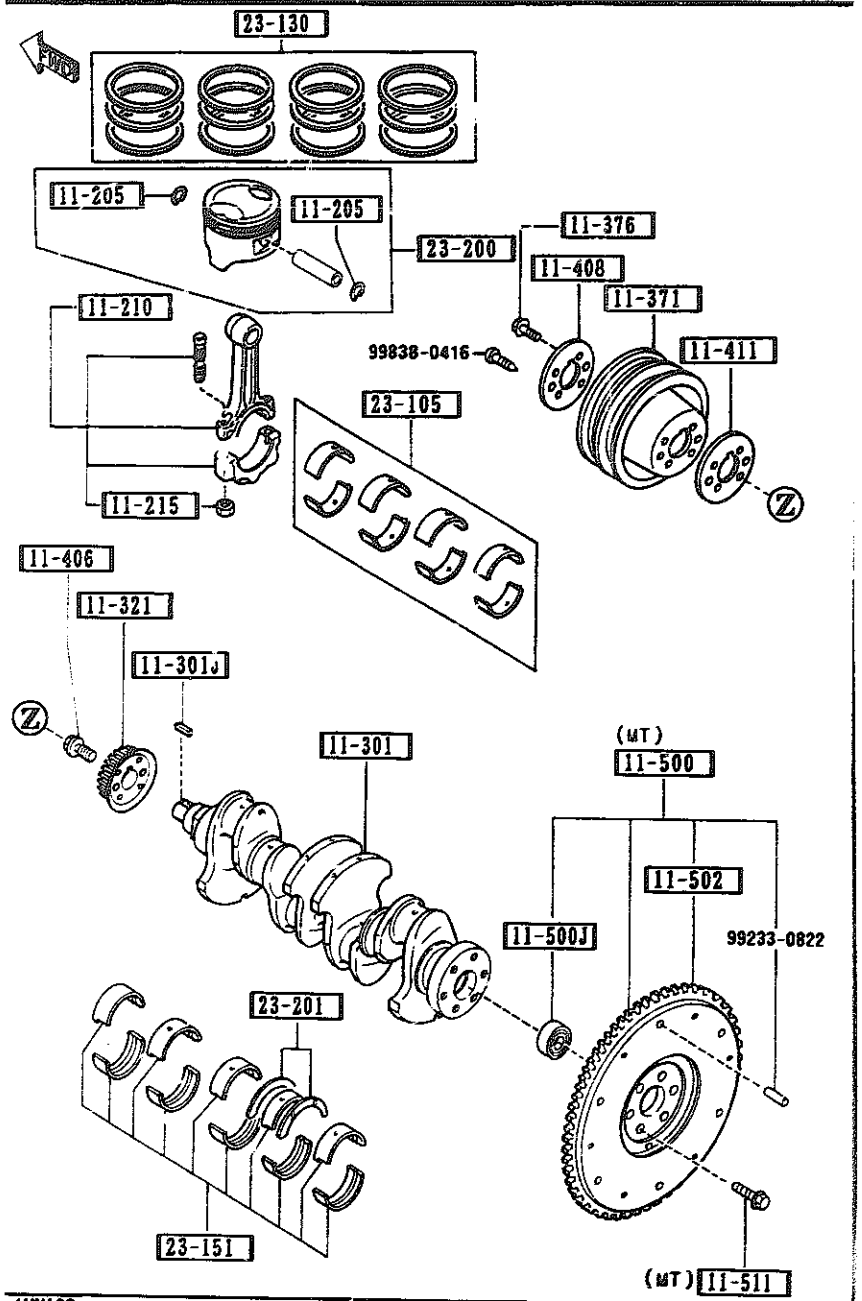

AUNA03

PART NO.	QTY	MODEL/RESTRICTION	MODEL/RESTRICTION	MODEL/RESTRICTION	FROM-TO
CONT'D					
B6Z5-11-SA0	4	STD. (AT)			
B6Z2-11-SBXC	4	O.S. 0.50 (MT)			
B6Z5-11-SBX	4	O.S. 0.50 (AT)			
B6Z2-11-SB0C	4	O.S. 0.25 (MT)			
B6Z5-11-SB0	4	O.S. 0.25 (AT)			
23-201		METAL SET,THRUST			
B6Y1-11-SJ0	1	STD.			
B6Y1-11-SKX	1	O.S. 0.50			
B6Y1-11-SKY	1	O.S. 0.75			
B6Y1-11-SK0	1	O.S. 0.25			

CAT. AUNA03-04

1994-10

1200 VALVE SYSTEM

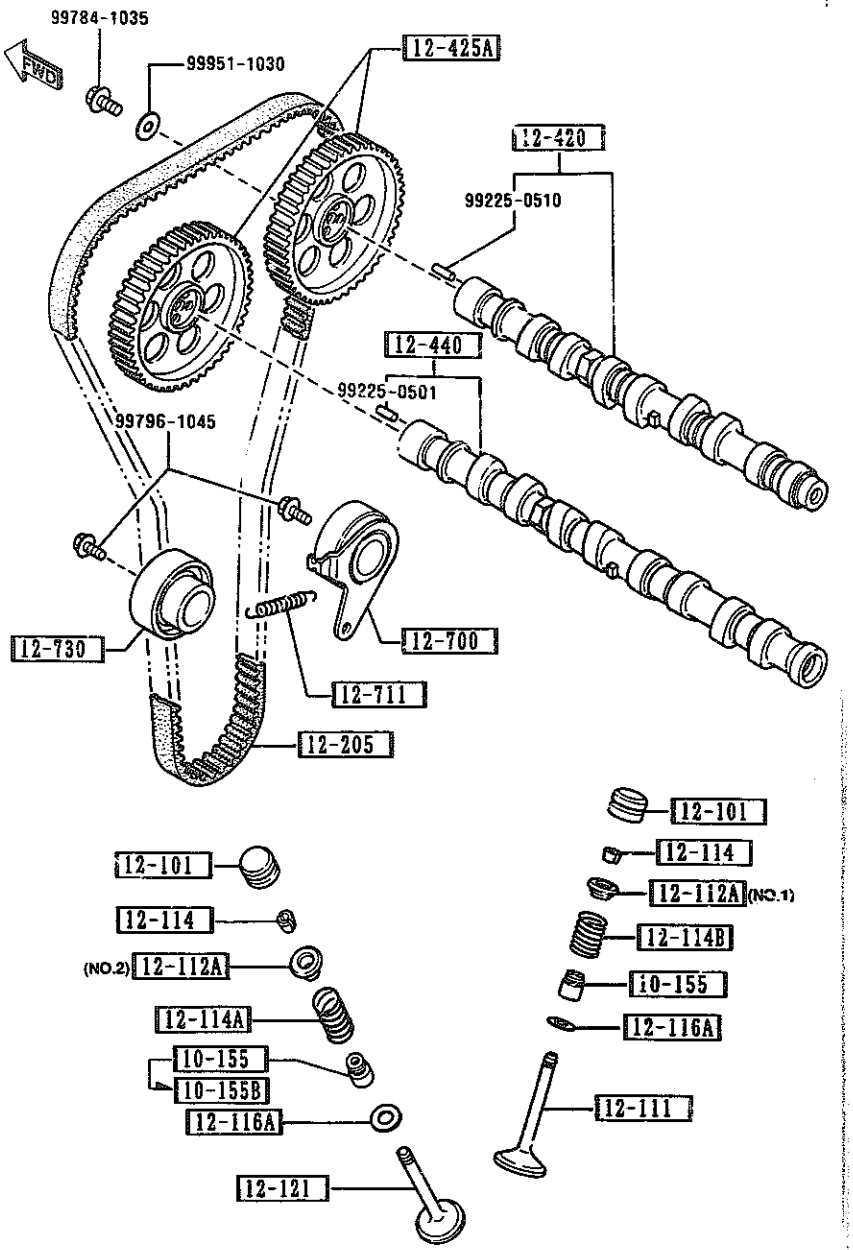

PART NO.	QTY	MODEL/RESTRICTION	MODEL/RESTRICTION	MODEL/RESTRICTION	FROM-TO
10-155		SEAL,VALVE			
B660-10-155	16	NOK			-3701
※KL01-10-155	8	NOK			3701-
10-155B		SEAL,VALVE			
※KL02-10-155	8	NOK			3701-
12-101		ADJUSTER,HYDRAULIC LASH			
B660-12-101 AN(KL01-12-101B)	16	NITTAN VALVE			-3622
※KL01-12-101B	16	NITTAN VALVE			3622-
12-111		VALVE,INLET			
B6S7-12-111	8				
12-112A		SEAT,VALVE SPG-UP.			
BJ01-12-113	8	(ILLUST. NO.1)			
B660-12-113	8	(ILLUST. NO.2)			
12-114		COTTER,VALVE			
B660-12-114	32				
12-114A		SPRING,OUT.-VALVE			
B61P-12-125	8				
12-114B		SPRING,VALVE			
BJ01-12-125	8				
12-116A		SEAT,VALVE SPG.-LWR			
B660-12-123A	16				
12-121		VALVE,EXHAUST			
B660-12-121	8				
12-205		BELT,TIMING			
B6S7-12-205B AN(B6S7-12-205C)	1				-2901
B6S7-12-205C	1	UNITTA			2901-

2901 NA351※-401942
3622 NA351※-423305
3701 NA351※-423706

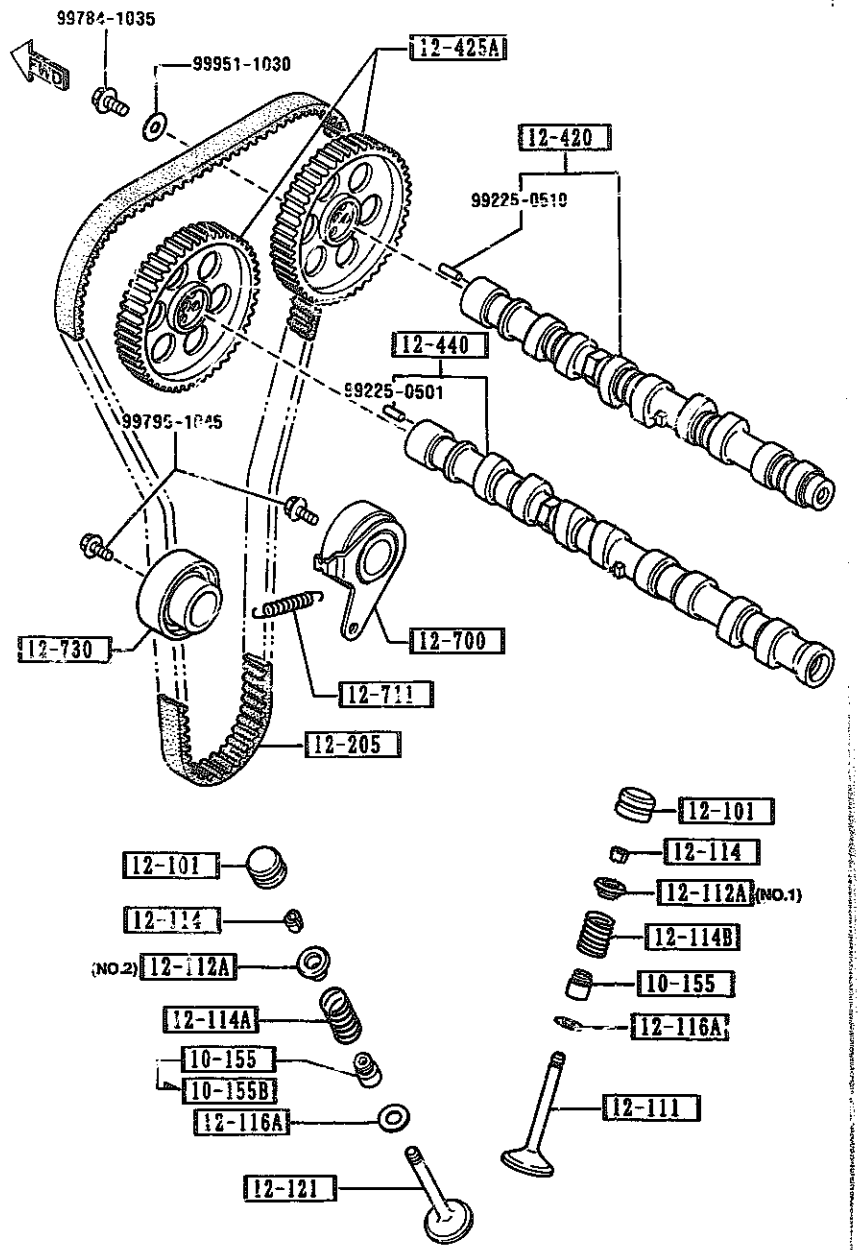

PART NO.	QTY	MODEL/RESTRICTION	MODEL/RESTRICTION	MODEL/RESTRICTION	FROM-TO
12-420		CAMSHAFT			
B64J-12-420 AN(B64J-12-420B)	1				-3601
B660-12-420C AN(B660-12-420E)	1				-3601
B64J-12-420B	1	(AT)			3601-
B660-12-420E	1	(MT)			3601-
12-425A		PULLEY,CAMSHAFT			
B6S7-12-425A	2				
12-440		CAMSHAFT,EXHAUST			
B6A7-12-440A	1	(AT)			
B61P-12-440	1	(MT)			
12-700		TENSIONER,T.BELT			
B660-12-700D	1				
12-711		SPRING,TENSIONER			
B660-12-711C	1				
12-730		IDLER,TIMING BELT			
B660-12-730C	1				

3601 MA351*-422220

1300 INLET MANIFOLD

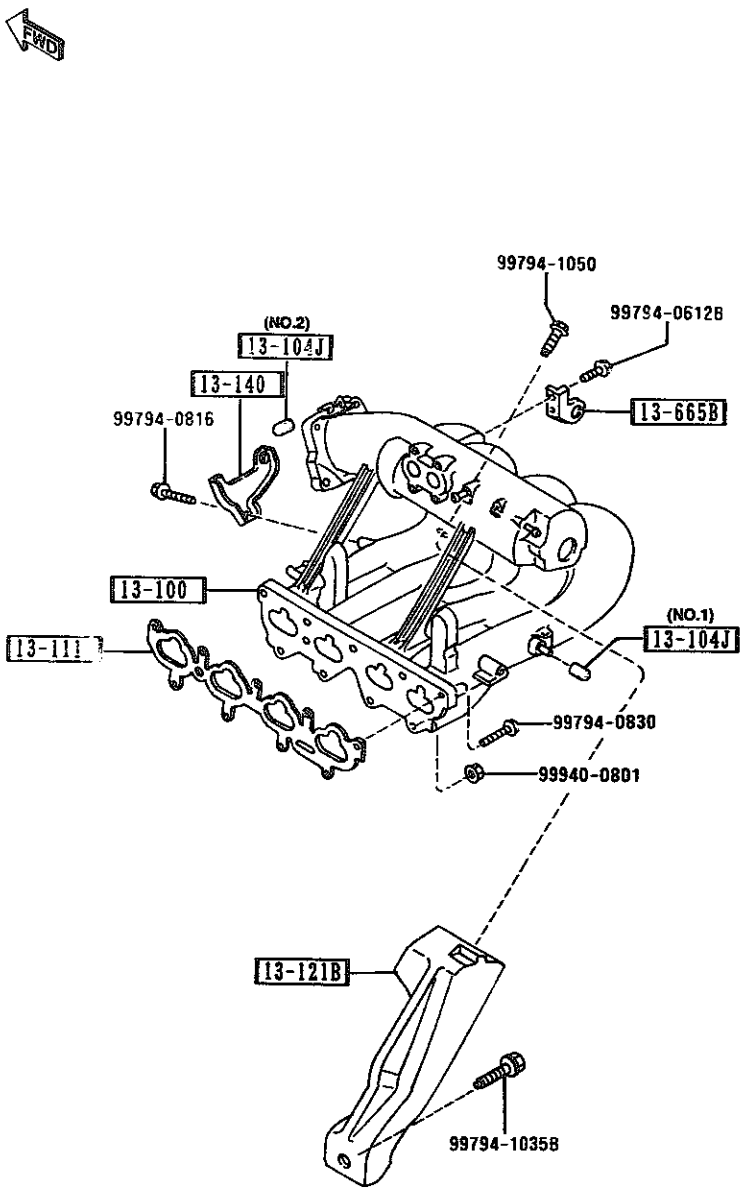

PART NO.	QTY	MODEL/RESTRICTION	MODEL/RESTRICTION	MODEL/RESTRICTION	FROM-TO
13-100		MANIFOLD,INLET			
B61P-13-100D	1				
13-104J		CAP,BLIND			
F8L7-13-104	1	(ILLUST. NO.1) (MT)			
1010-13-104	1	(ILLUST. NO.2)			
13-111		GASKET,IN.MANIFOLD			
B61P-13-111	1	NON ASBESTOS			
13-121B		STAY,MANIFOLD			
B61P-13-121	1				
13-140		BRKT,SURGE TANK			
B61P-13-140	1				
13-665B		BRACKET,ACCEL WIRE			
B61P-13-665	1				

1310 EXHAUST MANIFOLD

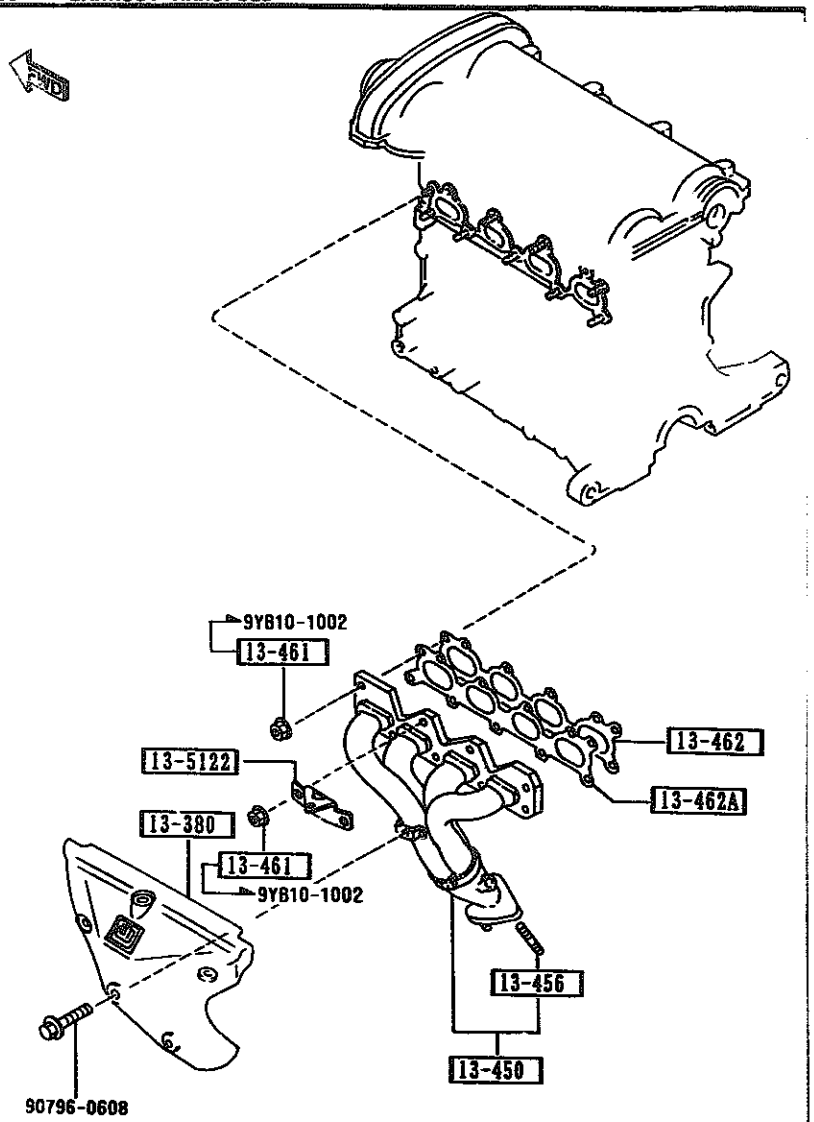

PART NO.	QTY	MODEL/RESTRICTION	MODEL/RESTRICTION	MODEL/RESTRICTION	FROM-TO
13-380		INSULATOR,HEAT			
B61P-13-380C	1				
13-450		MANIFOLD,EXHAUST			
B61P-13-450B	1				
13-456		STUD			
2306-13-456	3				
13-461		NUT,EX.MANIFOLD			
B6S7-13-465	9				-3501
13-462		GASKET,EX.MANIFOLD			
B695-13-460A	1	NON ASBESTOS			
13-462A		GASKET,EX.MANIFOLD			
B695-13-462	1				
13-5122		BRACKET,EX.MANIFOLD			
B61P-13-468	1				

3501 NA351#-420224

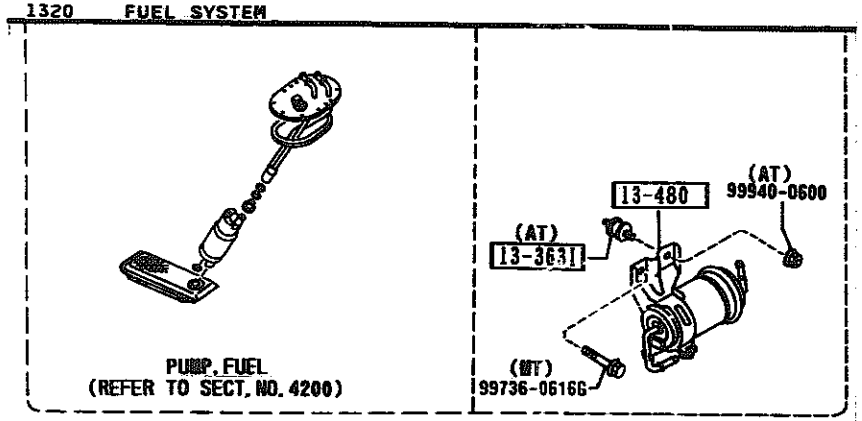

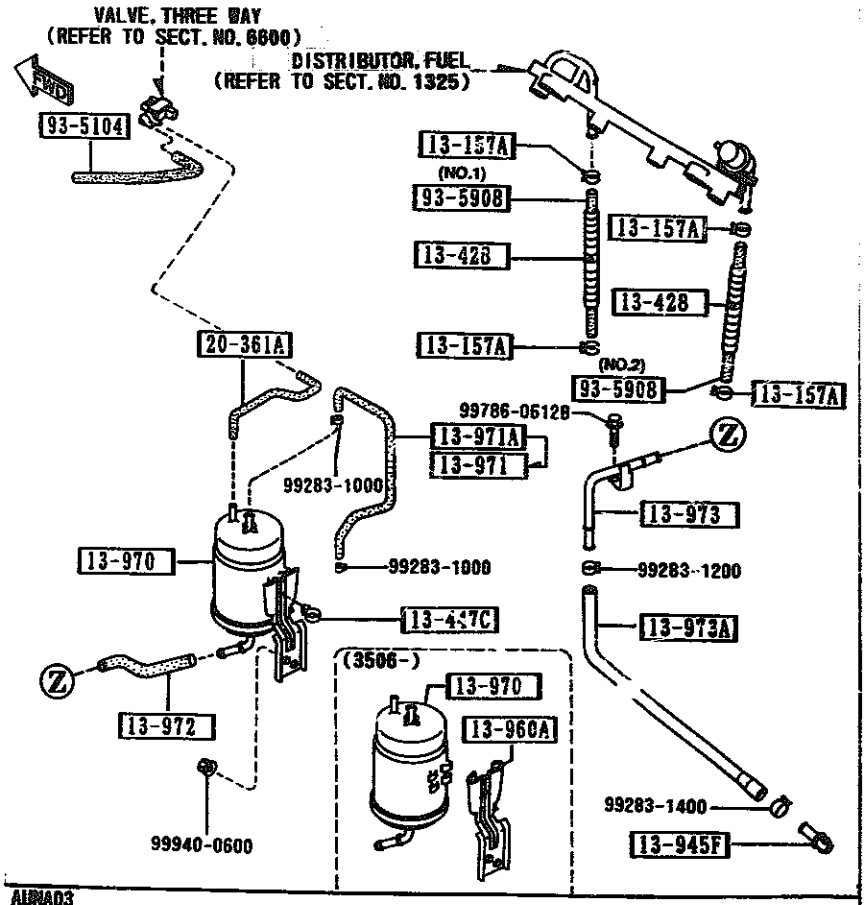

AUNA03

PART NO.	QTY	MODEL/RESTRICTION	MODEL/RESTRICTION	MODEL/RESTRICTION	FROM-TO
13-157A		CLIP			
8574-13-157	4				
13-363I		RUBBER, INSULATION			
N326-13-363B	2	(AT)			
13-428		PROTECTOR			
B61P-13-428	2				
13-447C		CLAMP, HOSE			
B61P-13-447	1				
13-480		FILTER, FUEL			
B61P-20-490	1				
13-691B		HOSE, WATER			
B61P-13-691A	1				
13-945F		CONNECTOR			
JE16-13-298	1				
13-960A		BRACKET, CANISTER			
B61P-13-960	1				
13-970		CANISTER			
B61P-13-970 C (F286-13-970A)	1				-3506
F286-13-970A	1				3506-
13-971		HOSE, VENTILATION			
B6CA-13-971	1				2A16-
13-971A		HOSE, VACUUM			
B61P-13-971 AN(B6CA-13-971)	1				-2A16
13-972		HOSE, EVAPORATION			
B61P-13-972A	1				-3506
B6CA-13-972	1				3506-
13-973		HOSE, DRAIN			

B61P-13-970 2A16 NA351*-401954
C F286-13-970A 1 3506 NA351*-420224
B6CA-13-972 1

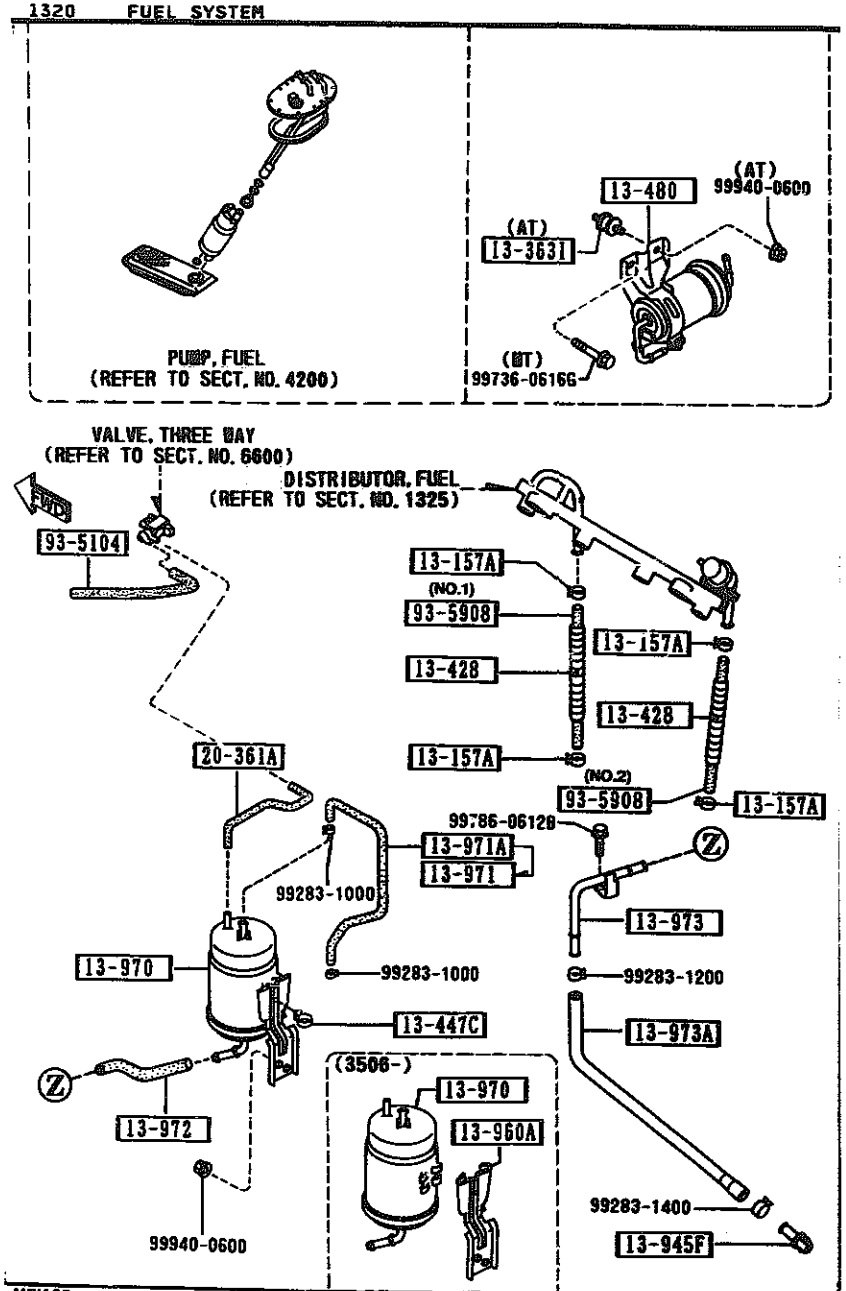

AUMA03

PART NO.	QTY	MODEL/RESTRICTION	MODEL/RESTRICTION	MODEL/RESTRICTION	FROM-TO
CONT'D					
B61P-13-97YA	1				
13-973A		HOSE, EVAPORATION			
B61P-13-973A	1				
20-361A		TUBE, VACUUM			
B61P-20-361	1				
93-5104		HOSE			
99351-04999	1				
93-5908		HOSE			
99359-0840	1	(ILLUST. NO.1)			
99359-0840M	1	(ILLUST. NO.2)			

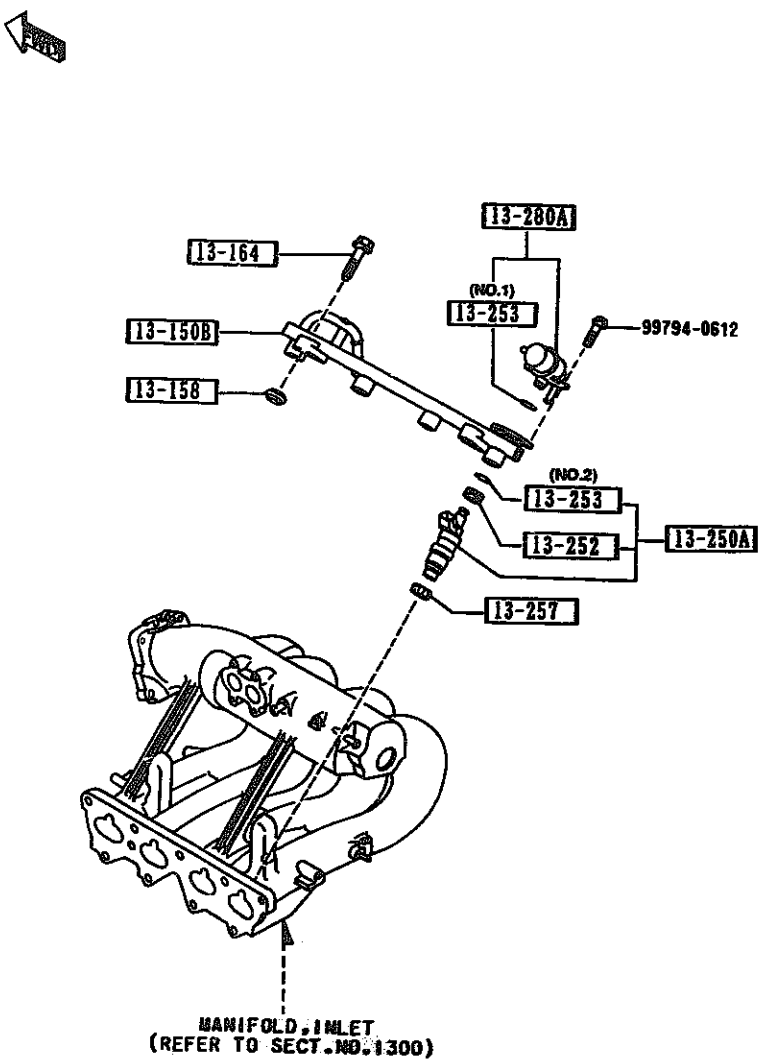

AUNA03

1325 -1 * FUEL DISTRIBUTOR

PART NO.	QTY	MODEL/RESTRICTION	MODEL/RESTRICTION	MODEL/RESTRICTION	FROM-TO
13-150B		DISTRIBUTOR,FUEL			
B61P-13-150	1				
13-158		INSULATOR,FUEL DIST.			
B675-13-158	2				
13-164		BOLT,FUEL DISTRIBUTOR			
F8B3-13-164	2				
13-250A		INJECTION,FUEL-M.P.ELECT.			
B6S7-13-250	4				
13-252		GROMMET			
8574-13-252	4				
13-253		RING,'O'			
G601-13-253	1	(ILLUST. NO.1)			
8574-13-253	4	(ILLUST. NO.2)			
13-257		INSULATOR,INJECTION			
JE06-13-257	4				
13-280A		PRESSURE RG.,FUEL			
B61P-13-280	1				

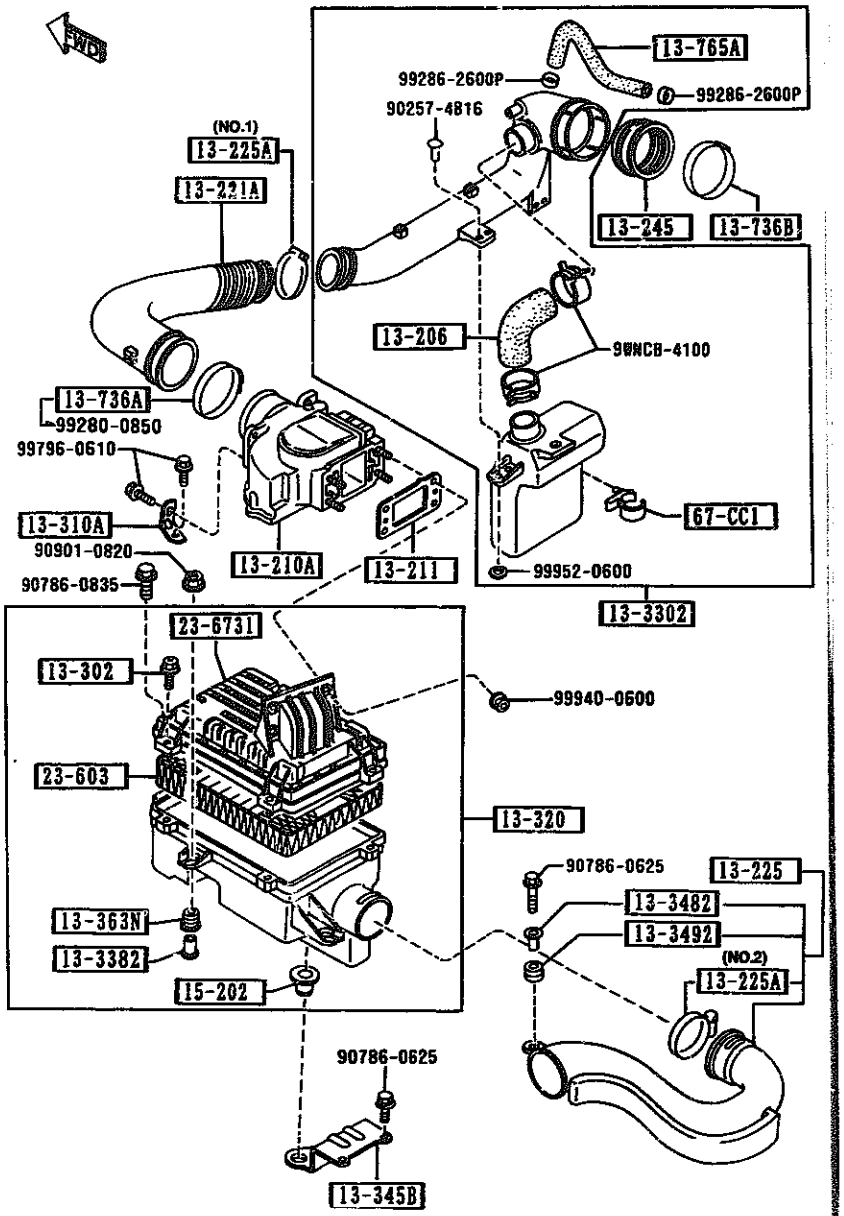

PART NO.	QTY	MODEL/RESTRICTION	MODEL/RESTRICTION	MODEL/RESTRICTION	FROM-TO
13-206		HOSE,AIR			
B61P-13-206A	1				
13-210A		SENSOR,AIR FLOW			
B6S7-13-210A	1				
13-211		GASKET			
B6S7-13-211A	1	NON ASBESTOS			
13-221A		HOSE,AIR			
B61P-13-221B	1				
13-225		DUCT,FRESH AIR			
B61P-13-200C	1				
13-225A		CLAMP,HOSE			
E5A1-13-225	1	(ILLUST. NO.1)			
B61P-13-735	1	(ILLUST. NO.2)			
13-245		JOINT,RUBBER			
B61P-13-245	1				
13-302		BOLT,AIR CLEANER			
F201-13-302A	4				
13-310A		BRKT,AIR FLOW METER			
B61P-13-311B	1				
13-320		HOUSING,AIR CLEANER			
B61P-13-320A	1				
13-3302		TUBE,AIR INTAKE			
B61P-13-330E	1	(MT)			
B64J-13-330	1	(AT)			
13-3382		SPACER			
FE51-13-329	3				
13-345B		BRACKET,AIR CLEANER			
B61P-20-211	1				

1330 AIR CLEANER

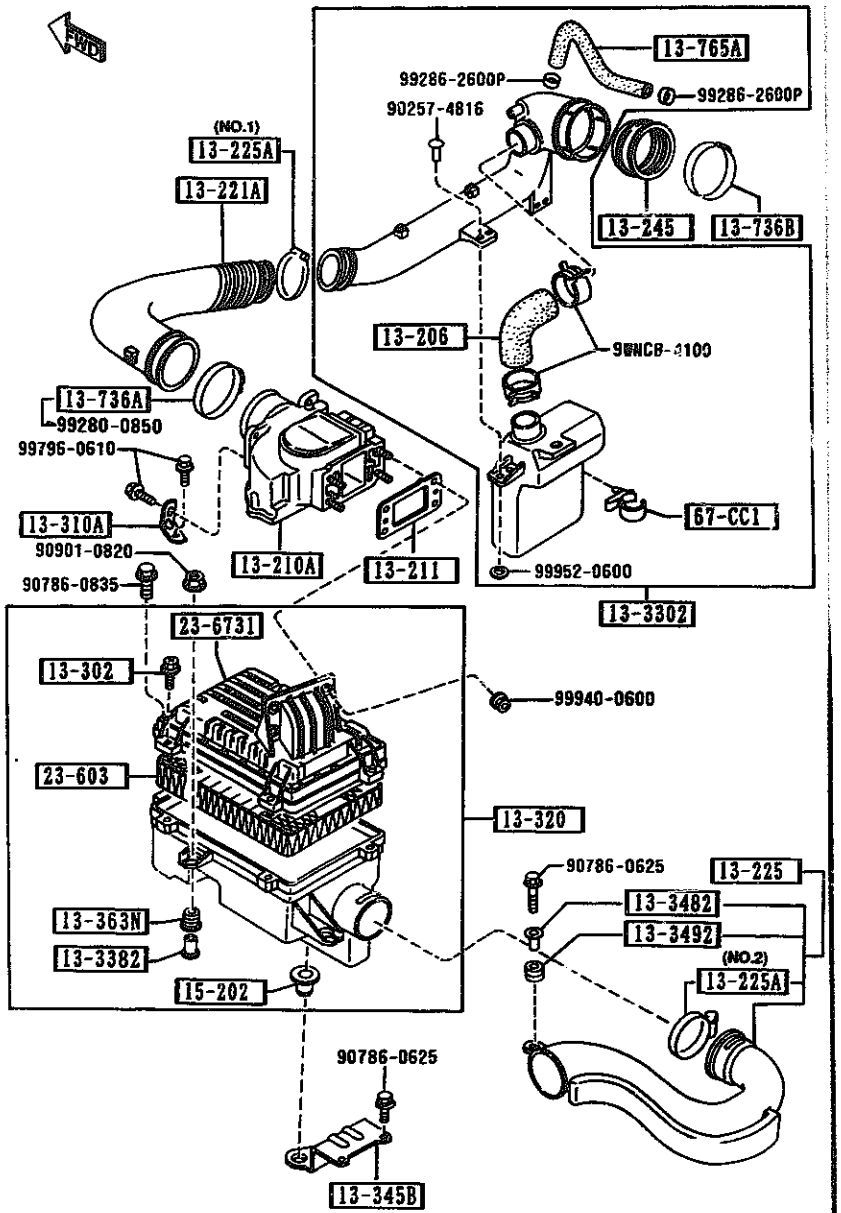

PART NO.	QTY	MODEL/RESTRICTION	MODEL/RESTRICTION	MODEL/RESTRICTION	FROM-TO
13-3482		SPACER,AIR INT.PIPE			
SLA1-13-321	1				
13-3492		INSULATOR			
S501-13-349	1				
13-363N		RUBBER,MOUNTING			
FE51-13-363	3				
13-736A		CLAMP,HOSE-A.I.P./A. CLNR			
B630-13-736	1				-3401
13-736B		CLAMP,HOSE			
F249-13-736	1				
13-765A		HOSE,AIR			
B61R-13-765	1				
15-202		RUBBER,MOUNT			
B61P-13-Z66	1				
23-603		ELEMENT,AIR CLEANER			
B6S7-13-Z40	1				
23-6731		COVER,AIR CLEANER			
B61P-13-Z01	1				
67-CC1		CLIP,HARNESS			
NA02-67-CH1	1				

3401 NA351*-418700

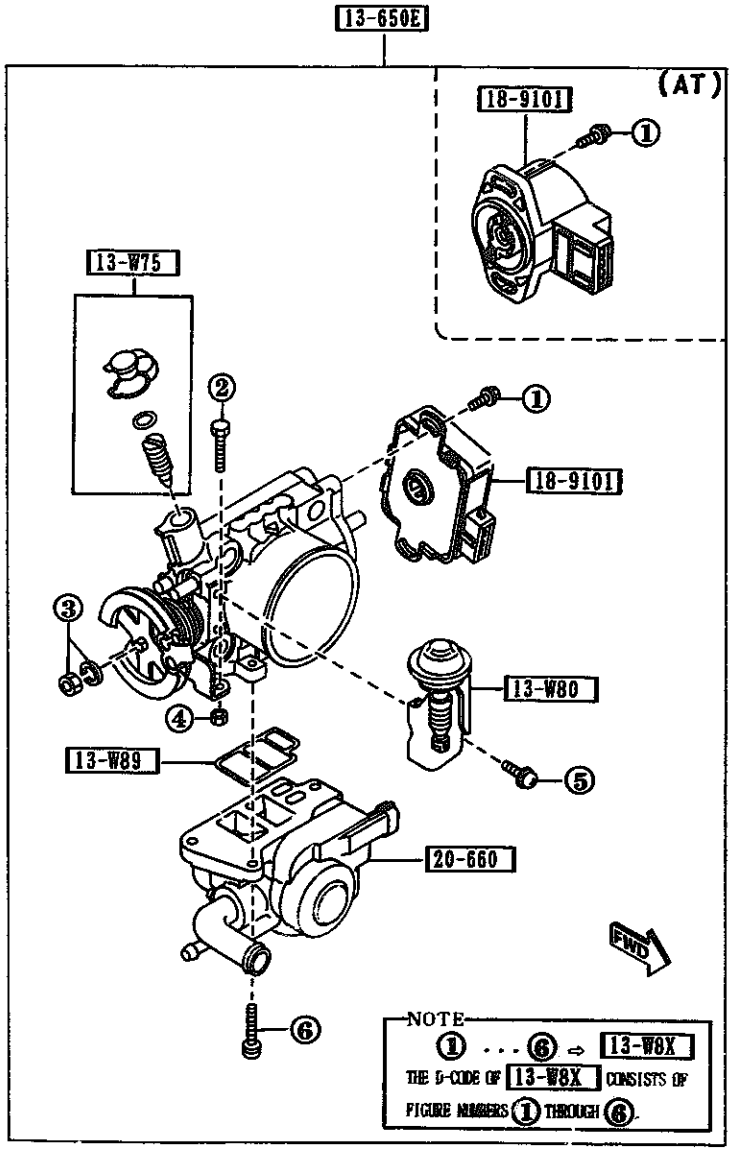

AUNA03

1364 -1 * THROTTLE BODY

PART NO.	QTY	MODEL/RESTRICTION	MODEL/RESTRICTION	MODEL/RESTRICTION	FROM-TO
13-W75		SCREW SET,IDLE ADJUST-TH.			
B551-13-W75A	1				
13-W8X		SCREW & WASHER SET			
B551-13-W8X	1				
13-W80		BRKT SET,DASH POT-THROT			
B61P-13-W80	1				
13-W89		GASKET,THERMO			
B551-13-W89	1				
13-650E		BODY,THROTTLE			
B61P-13-640B	1	(MT)			
B64J-13-640	1	(AT)			
18-9101		SENSOR,THROTTLE POSITION			
B6S8-18-911	1	(AT)			
B630-18-911	1	(MT)			
20-660		VALVE,IDLE AIR CONTROL			
B61P-20-660	1				

FWD

		99351-04S99	D=4mm
HOSE 93-5104	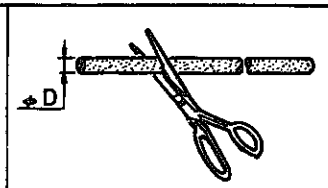		

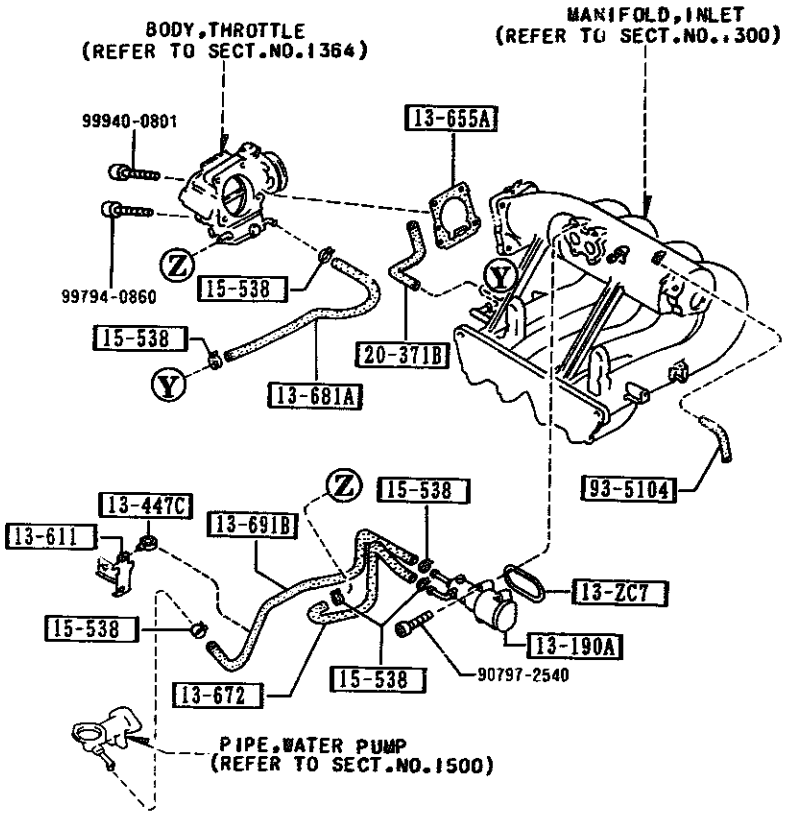

PART NO.	QTY	MODEL/RESTRICTION	MODEL/RESTRICTION	MODEL/RESTRICTION	FROM-TO
13-ZC7		RING,'O'-AIR VALVE			
B6S7-13-ZC7	1				
13-190A		VALVE,AIR			
B61P-13-190A	1	(MT)			
B64J-13-190	1	(AT)			
13-447C		CLAMP,HOSE			
B61P-13-447	1				
13-611		BRACKET			
B61P-13-685A	1				
13-655A		GASKET			
B6S7-13-655	1	NON ASBESTOS			
13-672		HOSE,WATER			
B61P-13-682A	1				
13-681A		HOSE,WATER			
B61P-13-681B	1				
13-691B		HOSE,WATER			
B61P-13-691A	1				
15-538		CLAMP,WATER HOSE			
JF02-15-538	6				
20-371B		TUBE,VACUUM			
B61P-20-371	1				
93-5104		HOSE			
99351-04999	1				

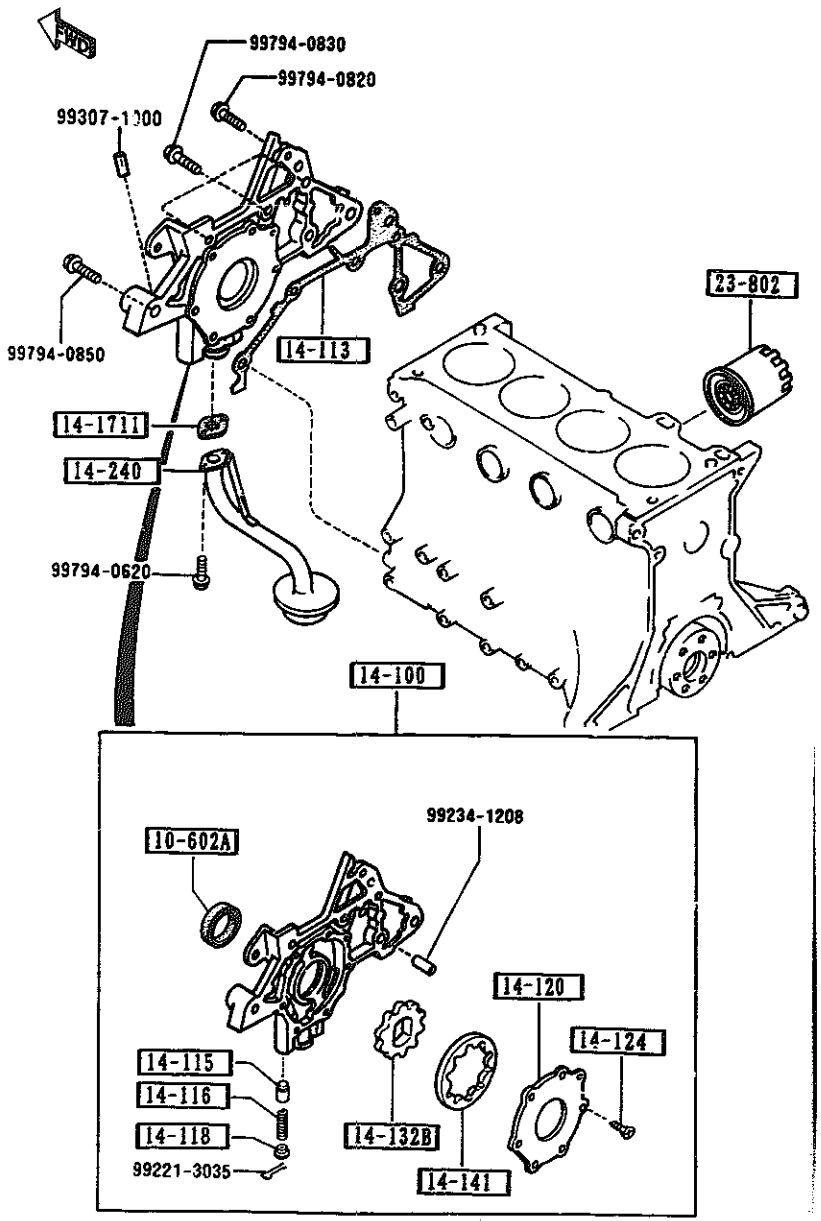

AUNA03

PART NO.	QTY	MODEL/RESTRICTION	MODEL/RESTRICTION	MODEL/RESTRICTION	FROM-TO
10-602A		SEAL,OIL			
B3C7-10-602A	1	NON ASBESTOS			
14-100		PUMP,OIL			
B6S8-14-100C	1				
14-113		GASKET,OIL PUMP			
B621-14-113	1	NON ASBESTOS			
14-115		PLUNGER,CONTROL			
0221-14-115	1				
14-116		SPRING,PRESSURE			
BPC8-14-116 A (0324-14-116B)	1				-2A01
0324-14-116B	1				2A01-
14-118		SHEET,SPRING			
0222-14-118	1				
14-120		COVER,OIL PUMP			
B3C7-14-121	1				
14-124		SCREW,OIL PUMP COVER			
FE1H-14-124	7				
14-132B		GEAR,INNER			
B6S7-14-132	1				
14-141		GEAR,OUTER			
B6S7-14-141	1				
14-1711		GASKET,OIL STRAINER			
B621-14-248	1	NON ASBESTOS			
14-240		STRAINER,OIL			
B61P-14-240	1				
23-802		CARTRIDGE,OIL FILTER			

2A01 NA351*-403707

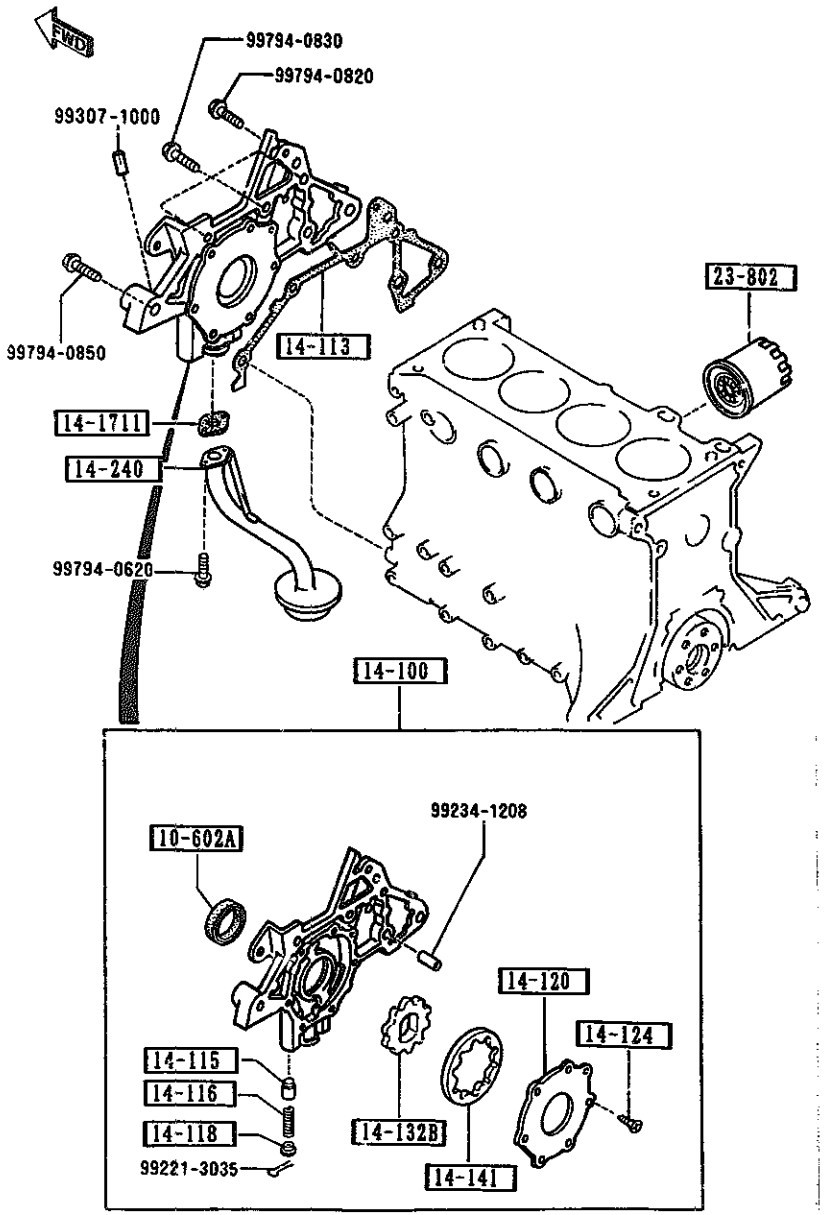

AUNA03

PART NO.	QTY	MODEL/RESTRICTION	MODEL/RESTRICTION	MODEL/RESTRICTION	FROM-TO
CONT'D					
B6Y1-14-302	1	TOKYO ROKI			

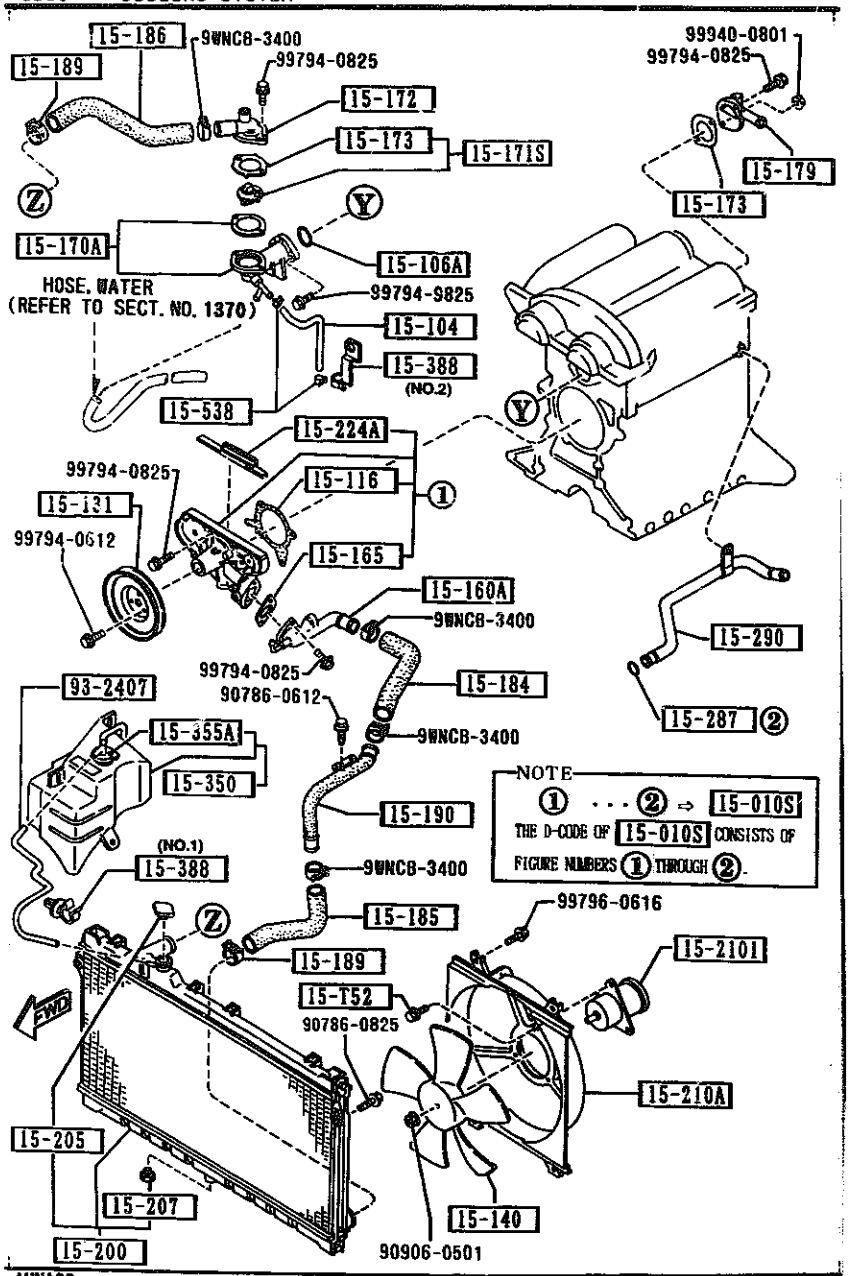

AUNA03

PART NO.	QTY	MODEL/RESTRICTION	MODEL/RESTRICTION	MODEL/RESTRICTION	FROM-TO
15-T52		SCREW,MOTOR-ELECTRIC FAN			
B6S8-15-T52	3				
15-010S		PUMP SET,WATER			
8AB8-15-010	1	NON ASBESTOS			
15-104		HOSE,WATER BY-PASS			
B61P-15-261A	1				
15-106A		RING,'O'-WATER PUMP			
B61P-15-106	1				
15-116		GASKET,WATER PUMP			
B621-15-116A	1	NON ASBESTOS			
15-131		PULLEY,WATER PUMP			
B366-15-131A	1				
15-140		FAN,COOLING			
B61P-15-140A	1	(MT)			
B64J-15-140	1	CALSONIC (AT)			
15-160A		INLET,WATER PUMP			
B61P-15-160	1				
15-165		GASKET,W.PUMP INLET			
B366-15-165 A (B621-15-165)	1				-3301
B621-15-165	1	NON ASBESTOS			3301-
15-170A		COVER,THERMO			
*B61P-15-170B	1				
15-171S		THERMOSTAT SET			
8AN1-15-171	1	NON ASBESTOS			
15-172		COVER,THERMOSTAT			
B61P-15-172	1				

3301 NA351*-416214

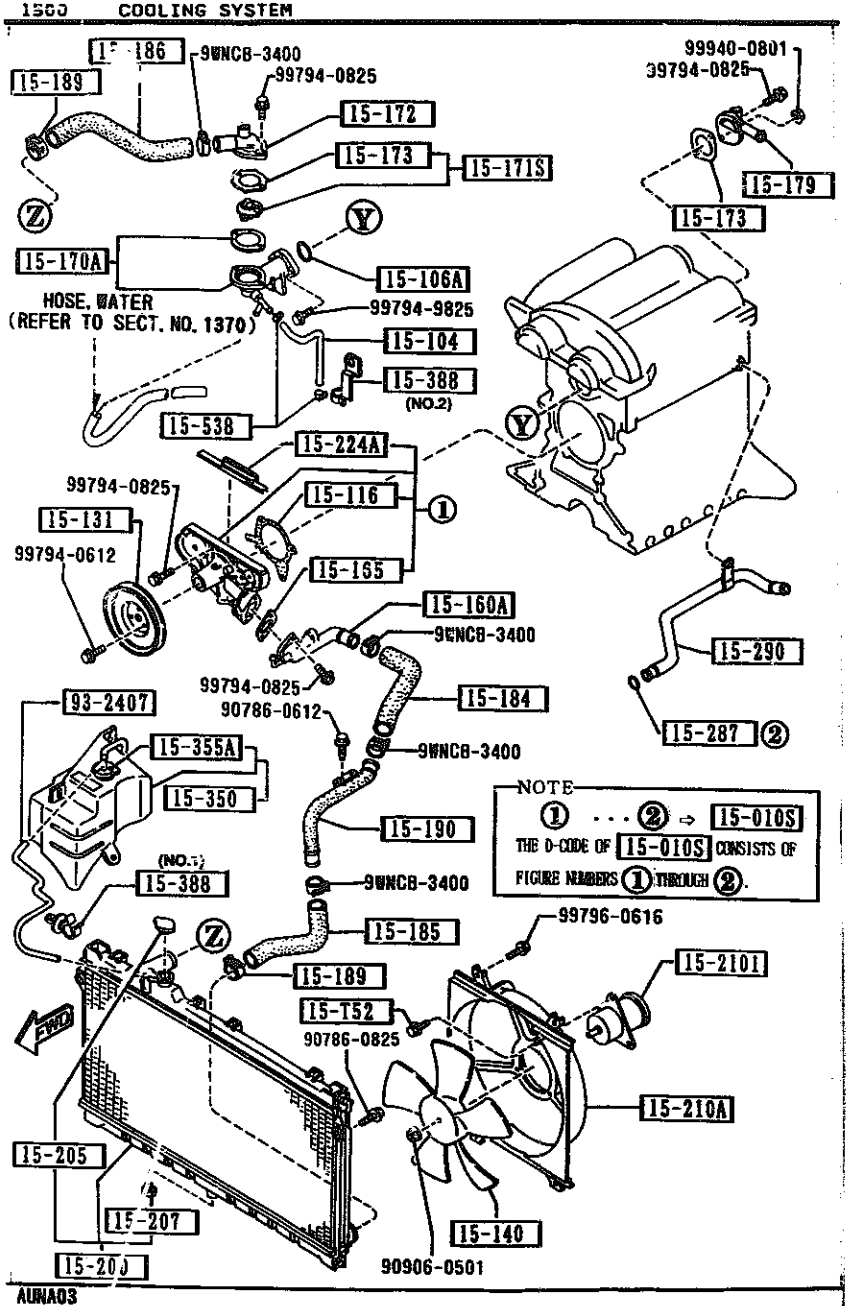

PART NO.	QTY	MODEL/RESTRICTION	MODEL/RESTRICTION	MODEL/RESTRICTION	FROM-TO
15-173		GASKET,THERMOSTAT COVER			
B366-15-173 AN(B621-15-173)	2				-3701
B621-15-173	2	NON ASBESTOS			3701-
15-179		OUTLET,WATER			
B61P-15-179A	1				
15-184		HOSE,WATER			
B61P-15-184	1				
15-185		HOSE,WATER			
B61P-15-185	1				
15-186		HOSE,WATER			
B61P-15-186	1				
15-189		CLAMP,HOSE			
B366-15-182	2				
15-190		PIPE,WATER			
B61P-15-190	1				
15-200		RADIATOR			
B61P-15-200B	1	CALSONIC (MT)			
B64J-15-200C	1	CALSONIC (AT)			
15-205		CAP,RADIATOR			
D316-15-205	1	CALSONIC			
15-207		COCK,DRAIN			
N326-15-203	1				-3401
NF01-15-203	1				3401-
15-210A		COWLING,RADIATOR			
B61P-15-210B	1				
15-2101		FAN DRIVE			

3401 NA351*-418700
3701 NA351*-423706

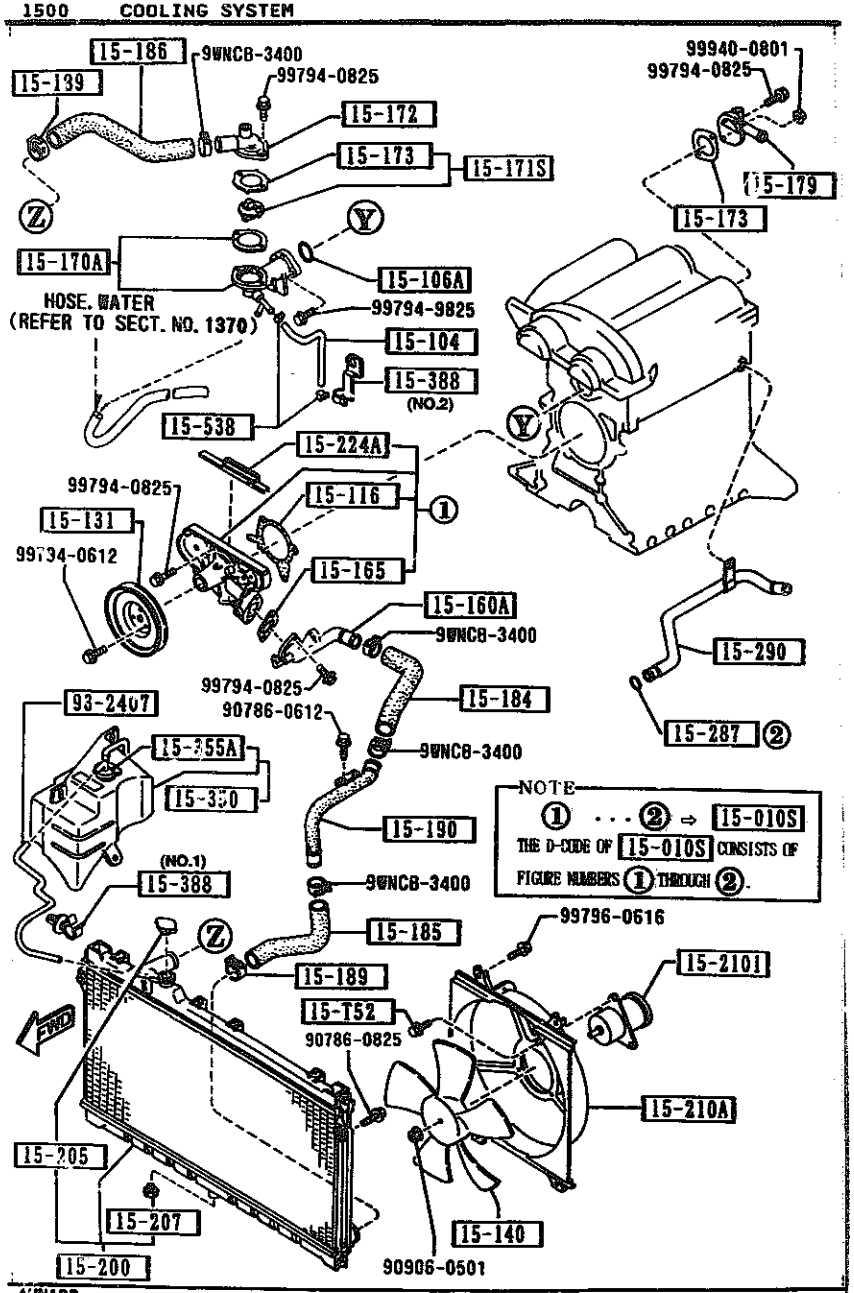

AUNA03

PART NO.	QTY	MODEL/RESTRICTION	MODEL/RESTRICTION	MODEL/RESTRICTION	FROM-TO
CONT'D					
361P-15-150B	1	(MT)			
B64J-15-150A	1	(AT)			
15-224A		RUBBER,SEAL			
B660-10-543B	1				
15-287		RING,'O'-WATER BYPAS S			
E301-15-287	1				
15-290		PIPE,BYPASS			
B61P-15-290B	1				
15-350		TANK,SUB-RADIATOR			
B61P-15-350D	1				
15-355A		CAP,SUB TANK			
B61P-15-355A	1				
15-388		CLIP,HOSE-SUB T.& WA TER H			
F201-15-388A	1	(ILLUST. NO.1)			
B61P-15-547	1	(ILLUST. NO.2)			
15-538		CLAMP,WATER HOSE			
JF02-15-538	2				
93-2407		HOSE,WATER			
99324-07610	1				

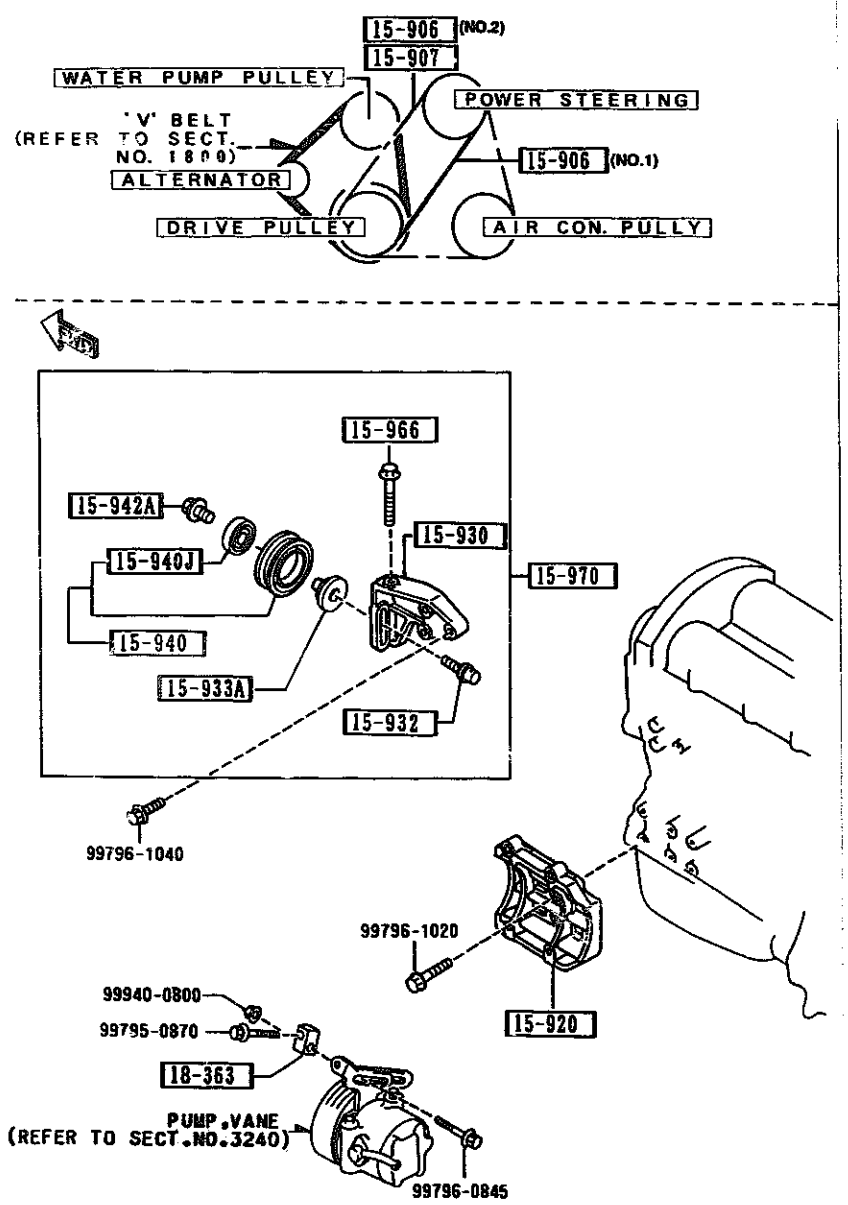

AUNA03

PART NO.	QTY	MODEL/RESTRICTION	MODEL/RESTRICTION	MODEL/RESTRICTION	FROM-TO
15-906		BELT'V'			
B61P-15-907A	1	L=855 4PK RIB.BELT PKG-A, RICO-20TH-ANV (ILLUST. NO.1) (W/POWER STEERING)			
B63H-15-908	1	L=855 4PK RIB.V. ((W/ AIR-CON.,W/O P. S.)) (ILLUST. NO.2)			
15-907		BELT'V'			
B63H-15-909	1	L=955 4PK RIB.V. ((W/ AIR-CON.,W/ P.S .))			
15-920		BRACKET,COMPRESSOR			
B61P-15-810A	1	(A) (W/AIR CON.)			
15-930		BRACKET,IDLE PULLEY			
BP01-15-951	1	(A) ((W/ AIR-CON.,W/O P. S.))			
15-932		SHAFT,PULLEY			
B631-15-932	1	(A) ((W/ AIR-CON.,W/O P. S.))			
15-933A		COLLAR			
BP01-15-933	1	(A) ((W/ AIR-CON.,W/O P. S.))			
15-940		PULLEY,IDLE			
BP01-15-940	1	(A) ((W/ AIR-CON.,W/O P. S.))			
15-940J		BEARING			
*99606-83020	1				
15-942A		COLLAR			
E564-15-942	1	(A) ((W/ AIR-CON.,W/O P. S.))			
15-966		BOLT,ADJUST			
E564-15-934		(A)			

CAT. AUNA03-04

1994-10

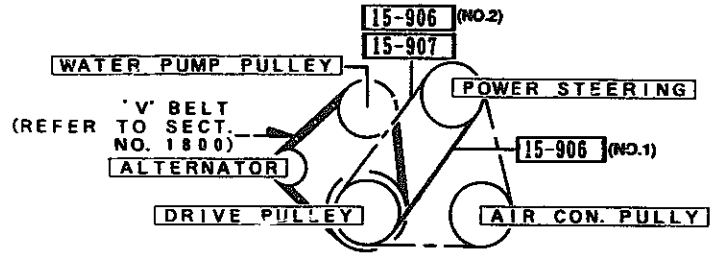

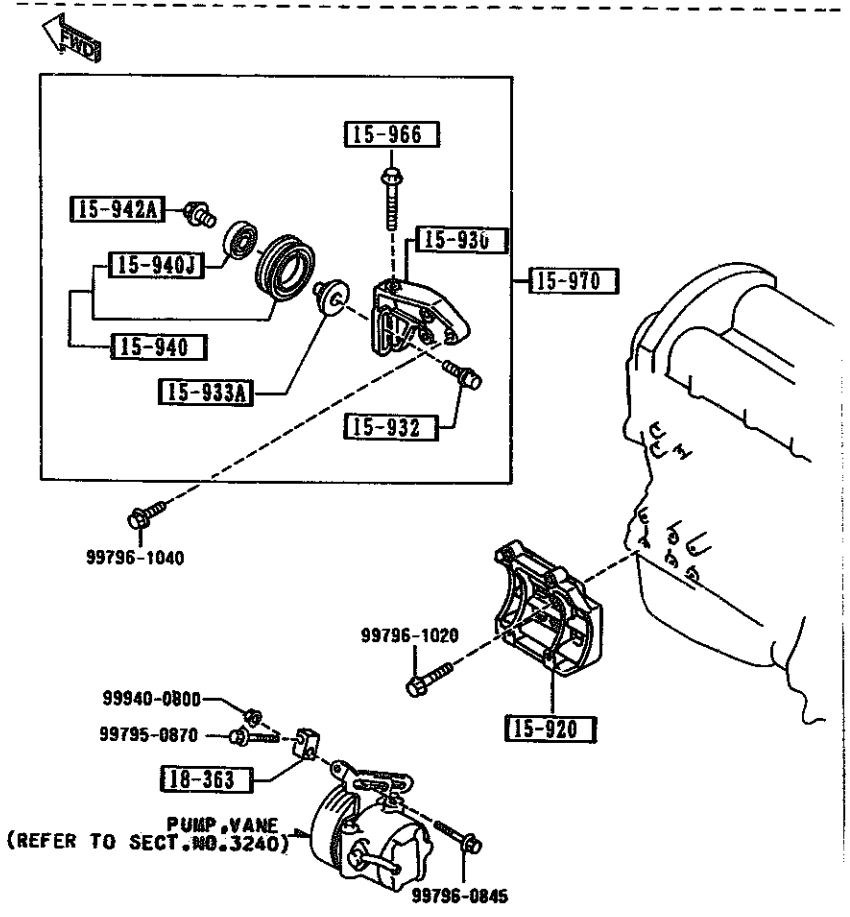

AUNA03

PART NO.	QTY	MODEL/RESTRICTION	MODEL/RESTRICTION	MODEL/RESTRICTION	FROM-TO
CONT'D					
	1	((W/ AIR-CON.,W/O P. S.))			
15-970		PULLEY,IDLE			
BP01-15-930		(A)			
	1	((W/ AIR-CON.,W/O P. S.))			
18-363		SPACER,STRAP			
F201-18-363	1	PKG-A, RICO-20TH-ANV (W/POWER STEERING)			-3506
FP02-18-363	1	PKG-A, RICO-20TH-ANV (W/POWER STEERING)			3506-

3506 NA351K-420224

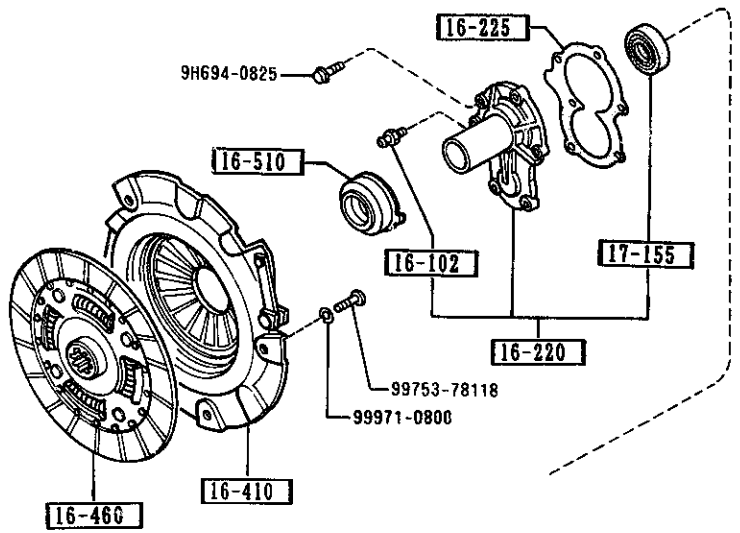

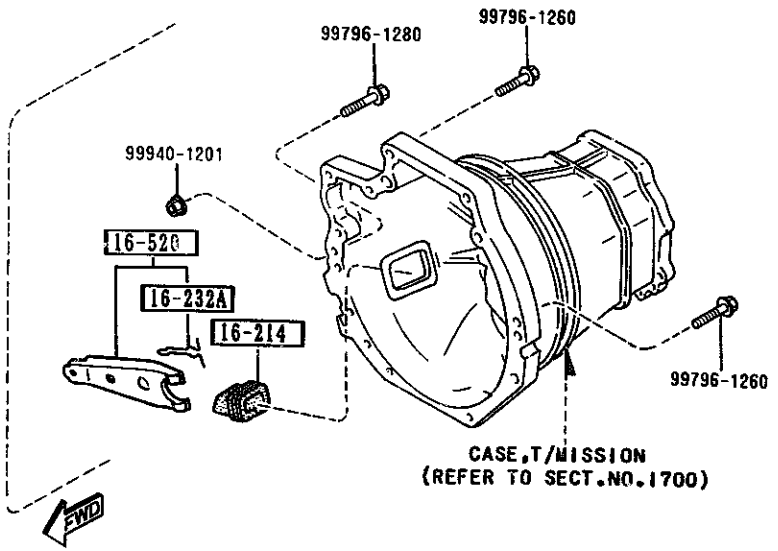

PART NO.	QTY	MODEL/RESTRICTION	MODEL/RESTRICTION	MODEL/RESTRICTION	FROM-TO
16-102 0603-16-102B	1	PIN,PIVOT-CLUTCH REL .FORK			
16-214 FE86-16-214	1	COVER,DUST-CLUTCH FO RK			
16-220 B622-16-220	1	COVER,FRONT CLUTCH			
16-225 FE50-16-225A	1	GASKET,FRONT COVER			
16-232A 1416-16-232A	1	SUPPORTER,FORK			
16-410 B622-16-410	1	COVER,CLUTCH			
16-460 B630-16-460	1	DISC,CLUTCH NON ASBESTOS			
16-510 B622-16-510	1	COLLAR,CLUTCH REL.			
16-520 B622-16-520	1	FORK,CLUTCH RELEASE			
17-155 H501-17-103	1	SEAL,OIL			

1700 -1 TRANSMISSION CASE (MANUAL)

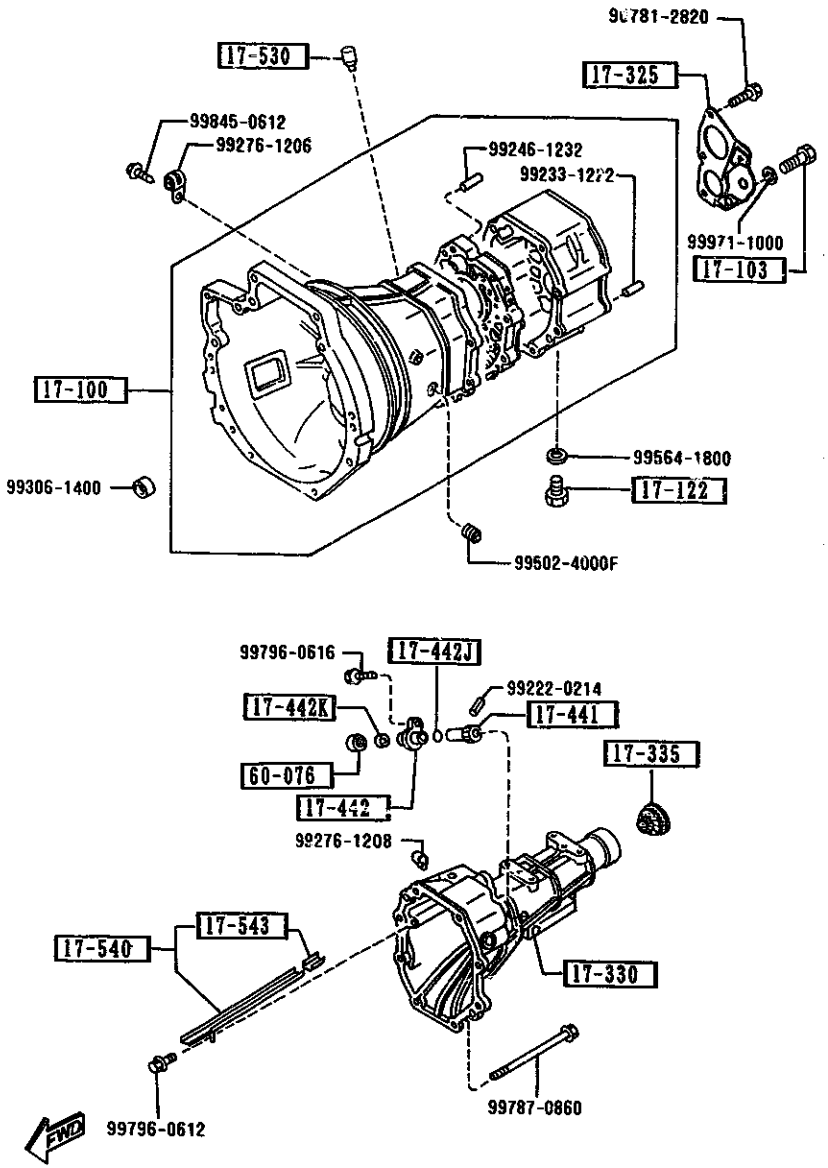

PART NO.	QTY	MODEL/RESTRICTION	MODEL/RESTRICTION	MODEL/RESTRICTION	FROM-TO
17-100		CASE,T/MISSION			
M526-17-100	1				
17-103		BOLT			
M501-17-103	2				
17-122		PLUG,MAGNET			
0810-17-121	1				
17-325		COVER,BEARING			
M501-17-370A	1				
17-330		HOUSING,EXTENSION			
M519-17-330	1				
17-335		SEAL,OIL			
M507-17-335A	1				
17-441		GEAR,DRIVEN			
1472-17-441A	1	N=23			
17-442		SLEEVE,SPEEDOMETER			
1669-17-442B	1				
17-442J		RING,'O'			
1011-17-443	1				
17-442K		SEAL,OIL			
99586-08166	1				
17-530		BREATHER,AIR-T/MISSION			
0884-17-530	1				
17-540		PASS,OIL			
M509-17-540	1				
17-543		RUBBER,SEAL			
M501-17-543A	1				
60-076		GASKET,GUIDE SEAL-SPEEDO.			

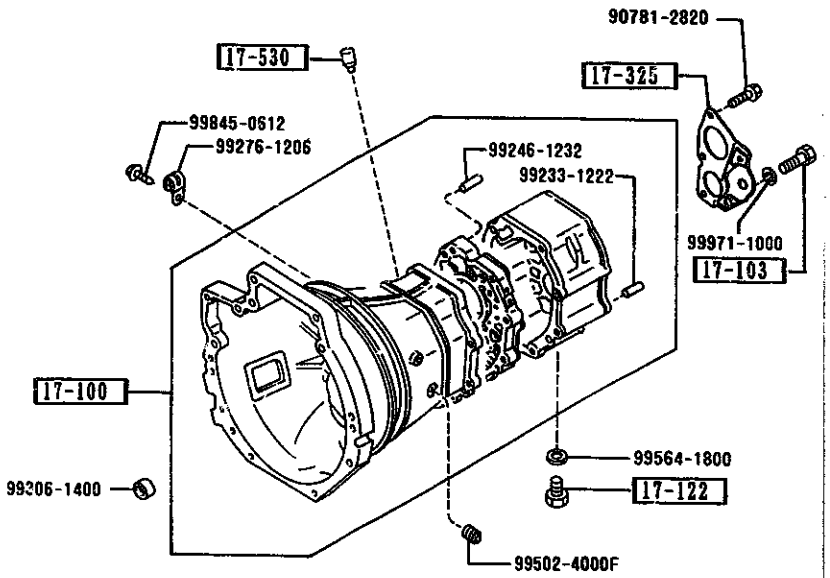

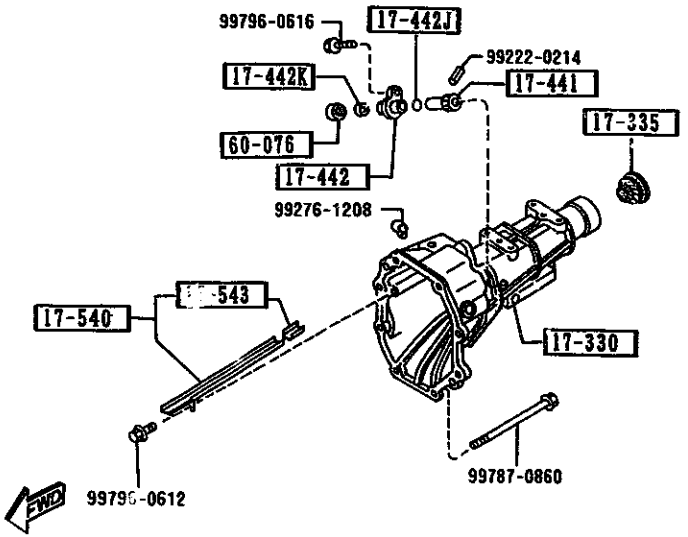

PART NO.	QTY	MODEL/RESTRICTION	MODEL/RESTRICTION	MODEL/RESTRICTION	FROM-TO
CONT'D					
B092-60-076A	1				-3401

3401 NA351*-418700

AUNA03

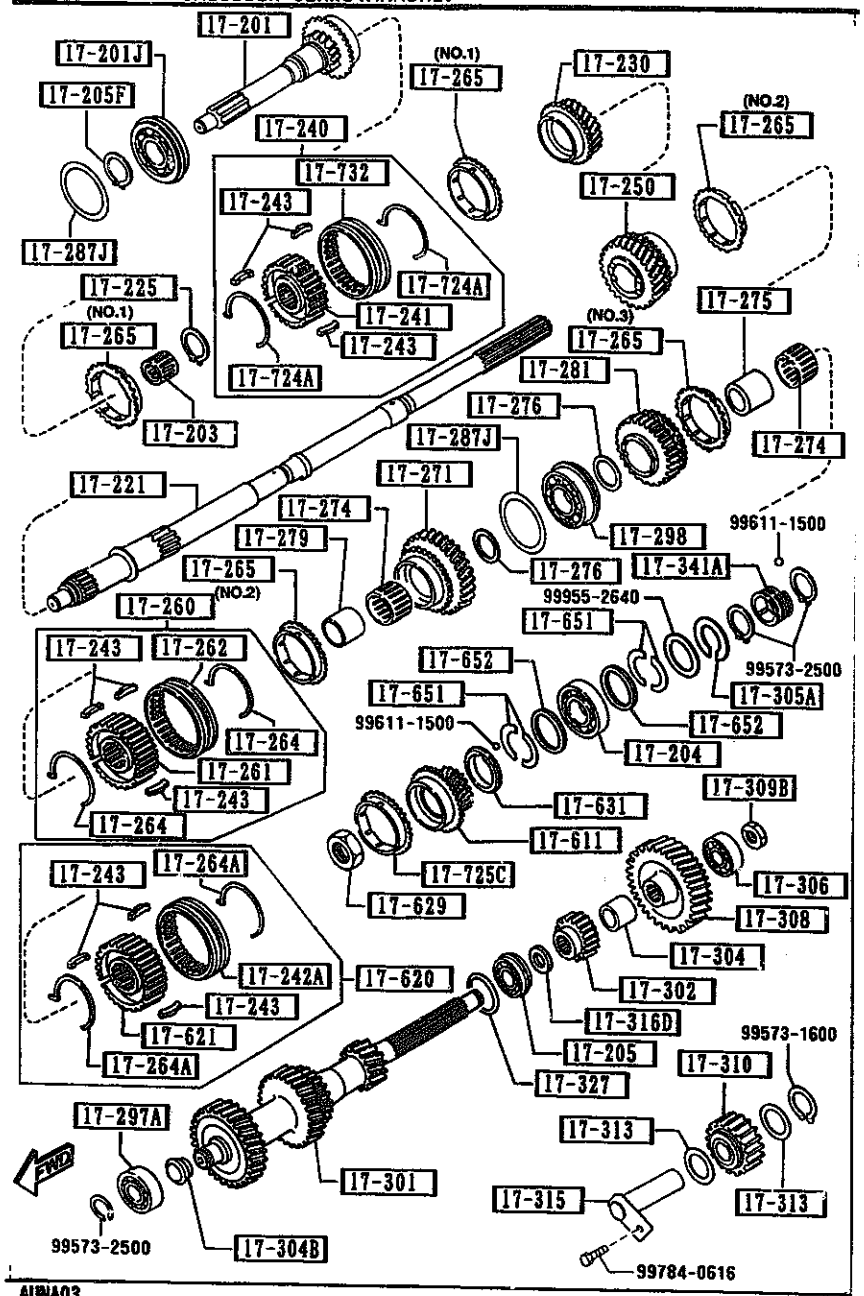

PART NO.	QTY	MODEL/RESTRICTION	MODEL/RESTRICTION	MODEL/RESTRICTION	FROM-TO
17-201 M516-17-201	1	GEAR,MAIN DRIVE			
17-201J M502-17-295C	1	BEARING,BALL-MAIN DRIVE GEAR			
17-203 M501-17-210A	1	BEARING,NEEDLE			
17-204 M503-17-204	1	BEARING,BALL-MAIN SHAFT			
17-205 R502-17-306A	1	BEARING,ROLLER			
17-205F M501-17-205	1	RING,RETAINING			
17-221 M505-17-221B	1	SHAFT,MAIN			
17-225 0317-17-225	1	RING,SNAP			
17-230 M513-17-231	1	GEAR,3RD			
17-240 M502-17-240D	1	HUB SET,CLUTCH-3RD & 4TH			-3201
M502-17-240E	1				3201-
17-241 M501-17-241C	1	HUB,CLUTCH			
17-242A F401-17-242A	1	SLEEVE,CLUTCH HUB			
17-243 F401-17-243A	9	KEY,SYNCHRONIZER			

3201 NA351#-413071

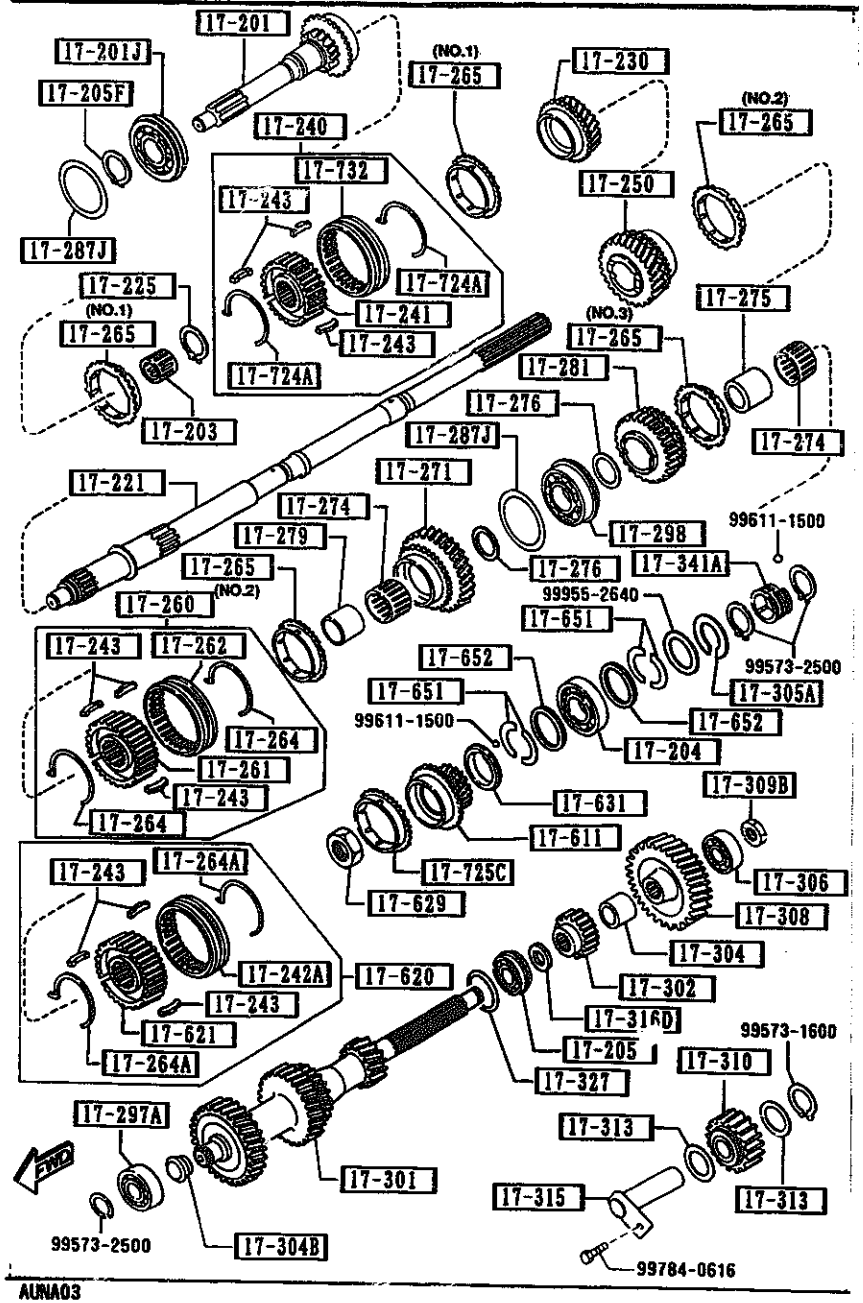

AUNA03

PART NO.	QTY	MODEL/RESTRICTION	MODEL/RESTRICTION	MODEL/RESTRICTION	FROM-TO
17-250		GEAR,2ND			
M515-17-251A	1				
17-260		HUB SET,CLUTCH-1ST & 2ND			
M505-17-260C	1				-3201
M505-17-260D	1				3201-
17-261		HUB,CLUTCH			
M502-17-261	1				
17-262		SLEEVE,CLUTCH HUB			
M503-17-262B	1				-3201
M503-17-262C	1				3201-
17-264		SPRING,SYNCHRO. KEY			
G401-17-264	2				
17-264A		SPRING,SYNCHRONIZER			
F401-17-264A	2				
17-265		RING,SYNCHRONIZER			
G501-17-265A	2	(ILLUST. NO.1)			
M502-17-265C	2	(ILLUST. NO.2)			
M504-17-265A	1	(ILLUST. NO.3)			
17-271		GEAR,1ST			
M516-17-271A	1				
17-274		BEARING,NEEDLE			
4069-17-283A	2				
17-275		RACE,INNER			
4069-17-284E	1				
17-276		WASHER,THRUST			
0259-17-274A	2	T=3MM			
0259-17-276	2	T=2.2MM			
0259-17-277	2	T=2.7MM			

3201 NA351*-413071

CAT. AUNA03-04

1994-10

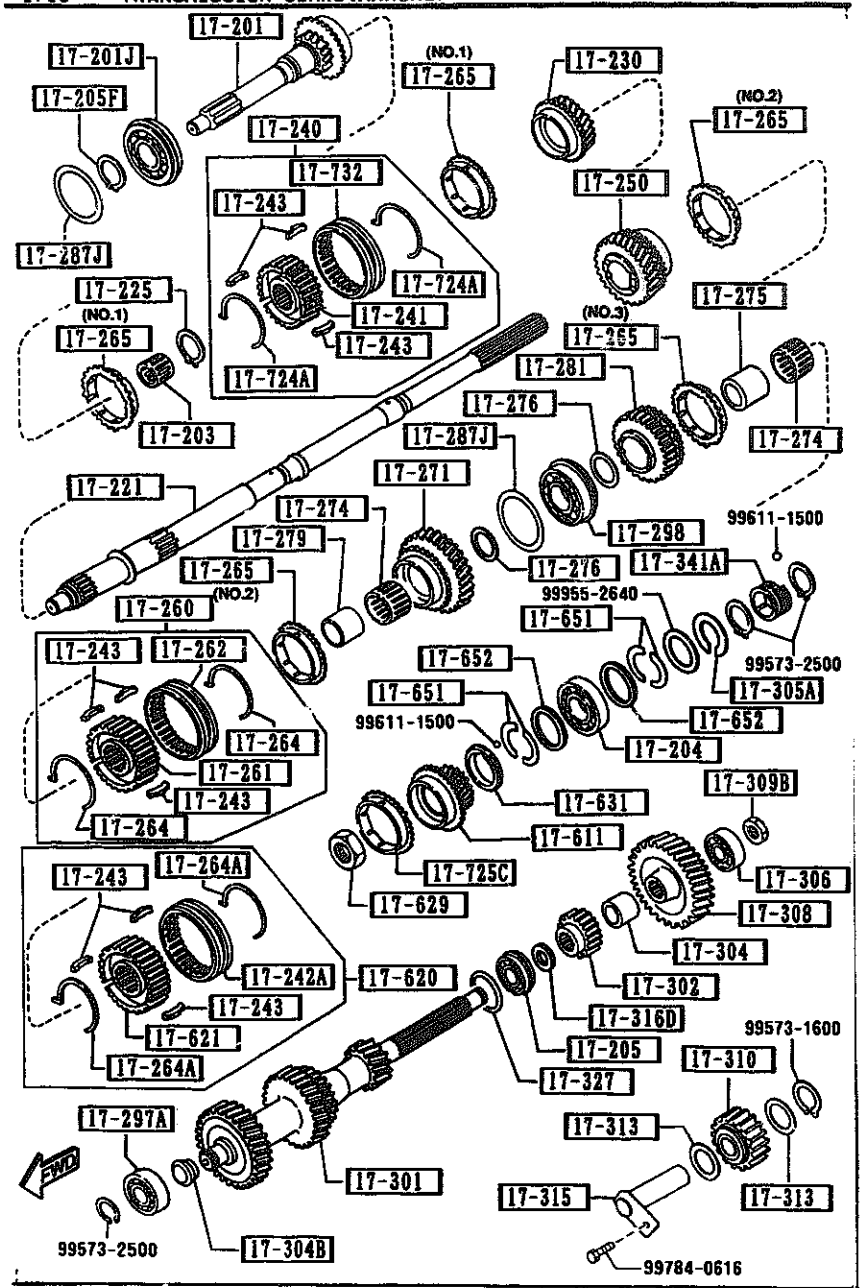

AUNA03

PART NO.	QTY	MODEL/RESTRICTION	MODEL/RESTRICTION	MODEL/RESTRICTION	FROM-TO
CONT'D					
0259-17-278	2	T=3.2MM			
0259-17-279	2	T=3.7MM			
17-279		SLEEVE,GEAR			
8540-17-275A	1				
17-281		GEAR,REVERSE			
M513-17-281	1				
17-287J		SHIM,ADJUST			
99963-6310	2	T=0.1MM			
99963-6315	1	T=0.15MM			
99963-6330	2	T=0.3MM			
17-297A		BEARING,BALL-COUNTER SHAFT G.			
M502-17-297A	1				
17-298		BEARING			
M502-17-298A	1				
17-301		GEAR,COUNTER SHAFT			
M528-17-301 A (M528-17-301A)	1				-3701
M528-17-301A	1				3701-
17-302		GEAR,COUNTER REVERSE			
M516-17-302	1				
17-304		SPACER			
M504-17-304	1				
17-304B		SPACER			
M501-17-304B	1				-3701
17-305A		RING,RETAINING-BALL BEARING			
0839-17-305B	1				

3701 NA351*-423706

1710 TRANSMISSION GEARS(MANUAL)

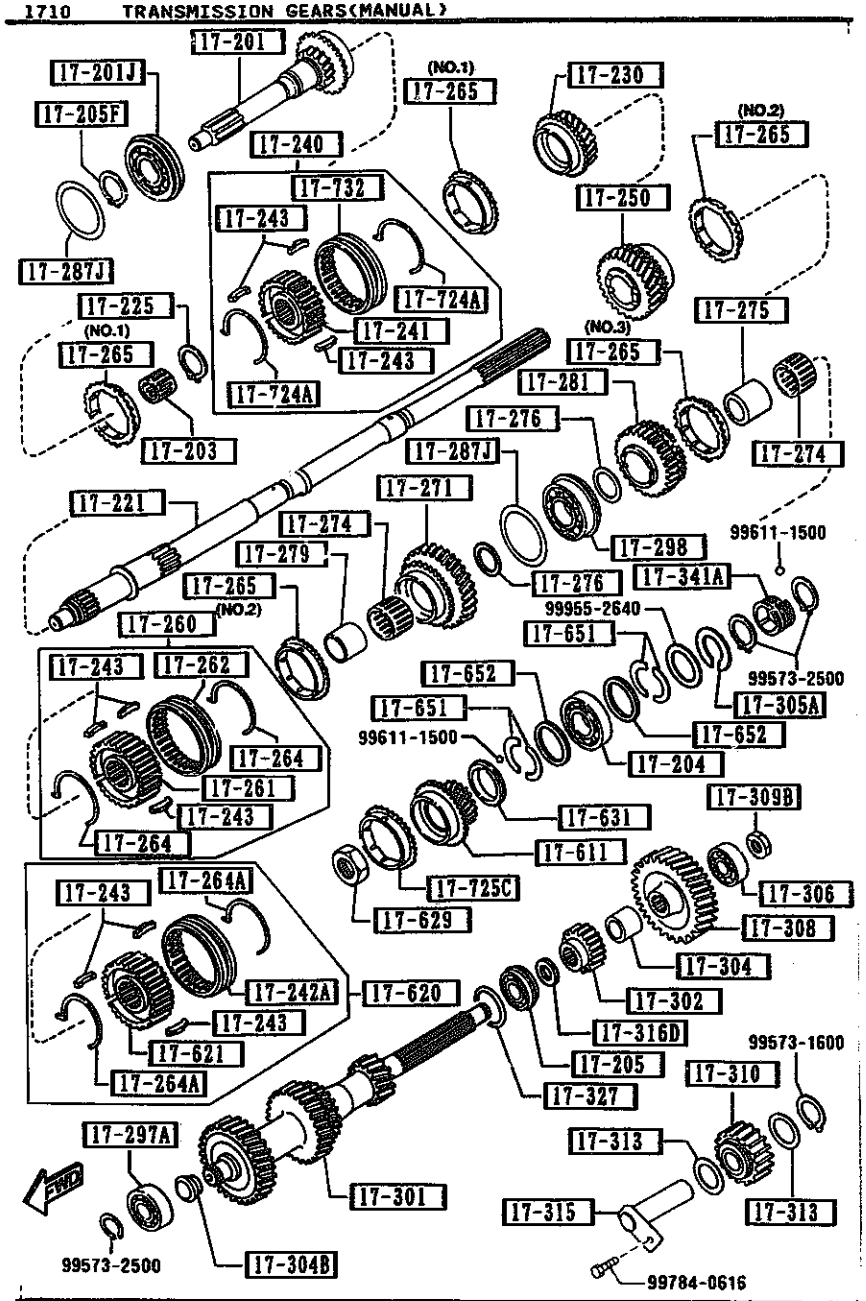

AUNA03

PART NO.	QTY	MODEL/RESTRICTION	MODEL/RESTRICTION	MODEL/RESTRICTION	FROM-TO
17-306 M502-17-299A	1	BEARING,BALL			
17-308 M510-17-308	1	GEAR,COUNTER			
17-309B M501-17-309	1	NUT,LOCK-COUNTER SHAFT BR			
17-310 M513-17-310	1	GEAR,REVERSE IDLE			
17-313 M501-17-313	2	WASHER,THRUST-REVERSE IDLE G. T=2MM			
17-315 M501-17-140	1	SHAFT,REV. IDLE GEAR			
17-316D R502-17-316	1	SPACER			
17-327 0305-17-327	2	SHIM,ADJUST-COUNTER SHAFT GEAR T=0.1MM			
0305-17-328	1	T=0.3MM			
17-341A M503-17-341	1	GEAR,SPEEDO.DRIVE			
17-611 M517-17-611	1	GEAR,OVER TOP			
17-620 M505-17-620	1	HUB SET,CLUTCH-O.T. & REV			
17-621 M505-17-621	1	HUB,CLUTCH			
17-629 8601-17-629	1	NUT,LOCK-CLUTCH HUB			

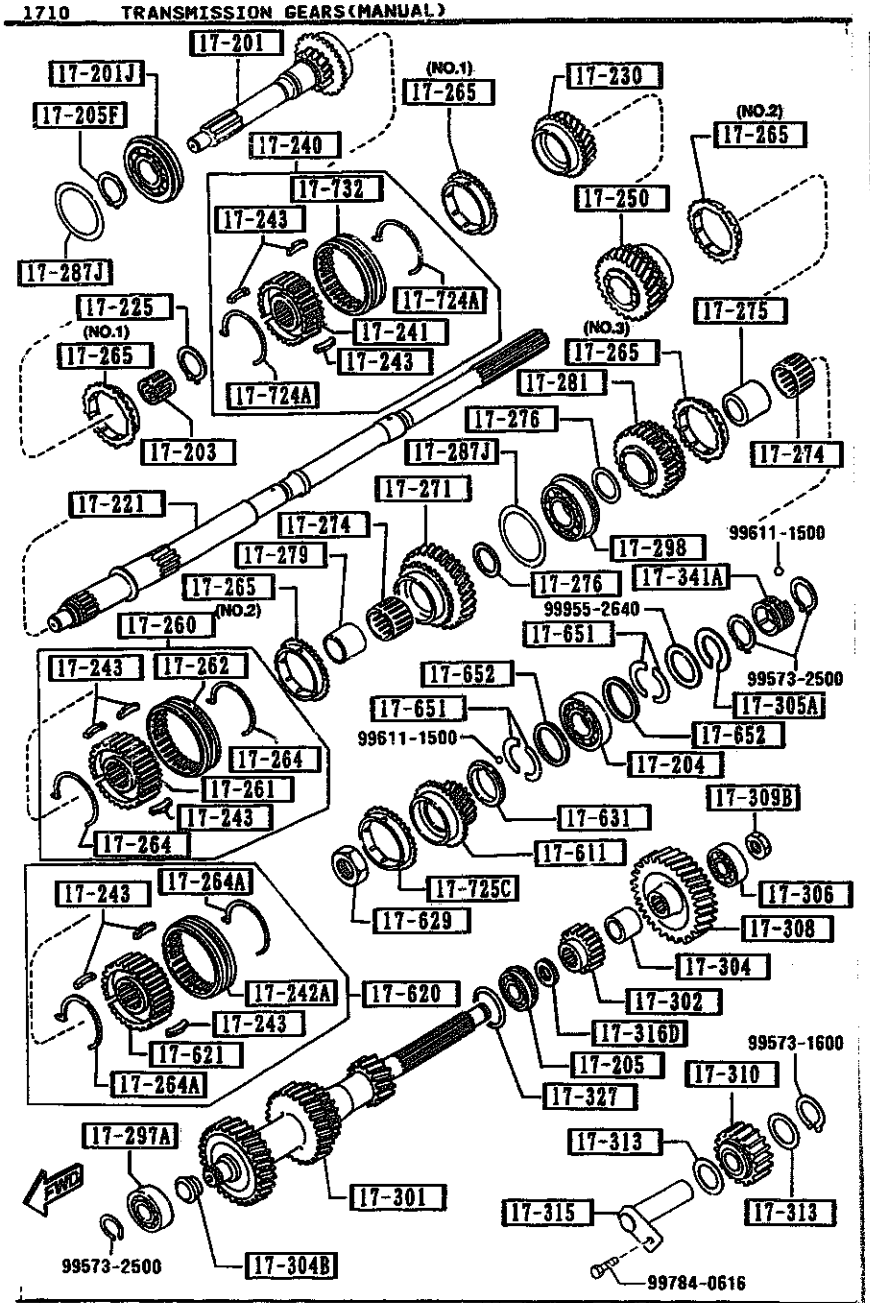

AUNA03

PART NO.	QTY	MODEL/RESTRICTION	MODEL/RESTRICTION	MODEL/RESTRICTION	FROM-TO
17-631		WASHER,THRUST LOCK-OVER TOP G.			
0884-17-632B	1	T=6.2MM			
0884-17-633B	1	T=6.4MM			
0884-17-634B	1	T=6.5MM			
0884-17-635B	1	T=6.6MM			
17-651		WASHER,THRUST			
M501-17-651	4	T=3MM			
M501-17-653	2	T=3.1MM			
M501-17-654	2	T=3.2MM			
M501-17-655	2	T=2.9MM			
17-652		RING,THRUST WASHER			
M501-17-652	2	T=2MM			
17-724A		SPRING,SYNCHRO.KEY			
W501-17-724	2				
17-725C		RING,SYNCHRONIZER			
V501-17-725	1				
17-732		SLEEVE,CLUTCH HUB			
W501-17-732B	1				-3201
W501-17-732C	1				3201-

3201 NA351※-413071

CAT. AUNA03-04

1994-10

1720 CHANGE CONTROL SYSTEM (MANUAL)

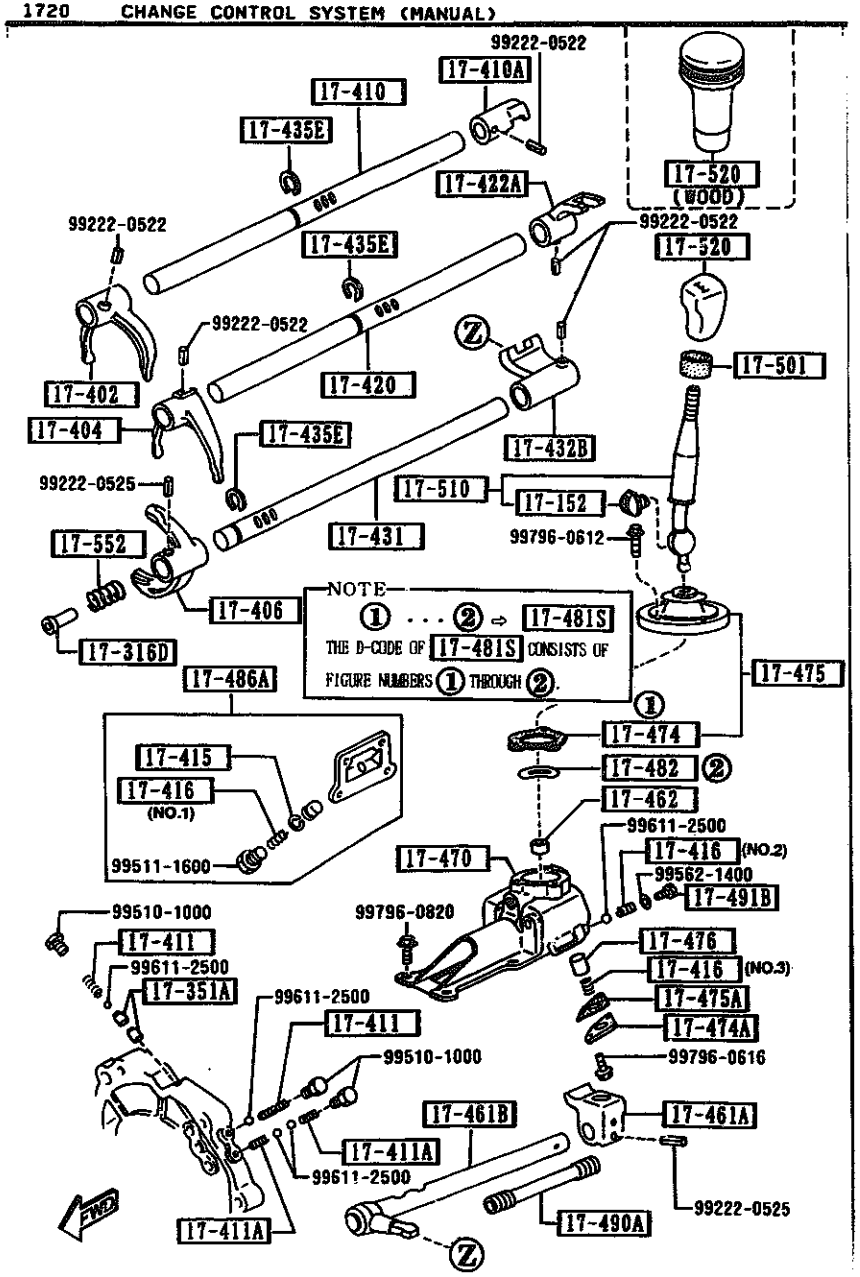

AUNA03

PART NO.	QTY	MODEL/RESTRICTION	MODEL/RESTRICTION	MODEL/RESTRICTION	FROM-TO
17-152		BUSH			
M501-17-515	1				
17-316D		SPACER			
M504-17-316	1				
17-351A		PIN,INTER LOCK			
0114-17-351	2				
17-402		FORK,SHIFT(1ST&2ND)			
M503-17-402	1				
17-404		FORK,SHIFT(3RD&4TH)			
M501-17-404B	1				
17-406		FORK,SHIFT			
M504-17-406A	1				
17-410		ROD,SHIFT(1ST&2ND)			
M503-17-411	1				
17-410A		END,S/ROD(1ST&2ND)			
M507-17-412	1				
17-411		SPRING,SHIFT ROD			
0103-17-411	2	5TH & REVERSE			
17-411A		SPRING,SHIFT ROD-REVERSE			
0014-17-411	2				
17-415		RING,RETAINING-SHIFT ROD END			
3648-17-415	1				
17-416		SPRING,SHIFT ROD END			
M501-17-416	1	(ILLUST. NO.1)			
M504-17-416	1	(ILLUST. NO.2)			
M505-17-416	1	(ILLUST. NO.3)			
17-420		ROD,SHIFT(3RD&4TH)			
M503-17-421	1				

1720 CHANGE CONTROL SYSTEM (MANUAL)

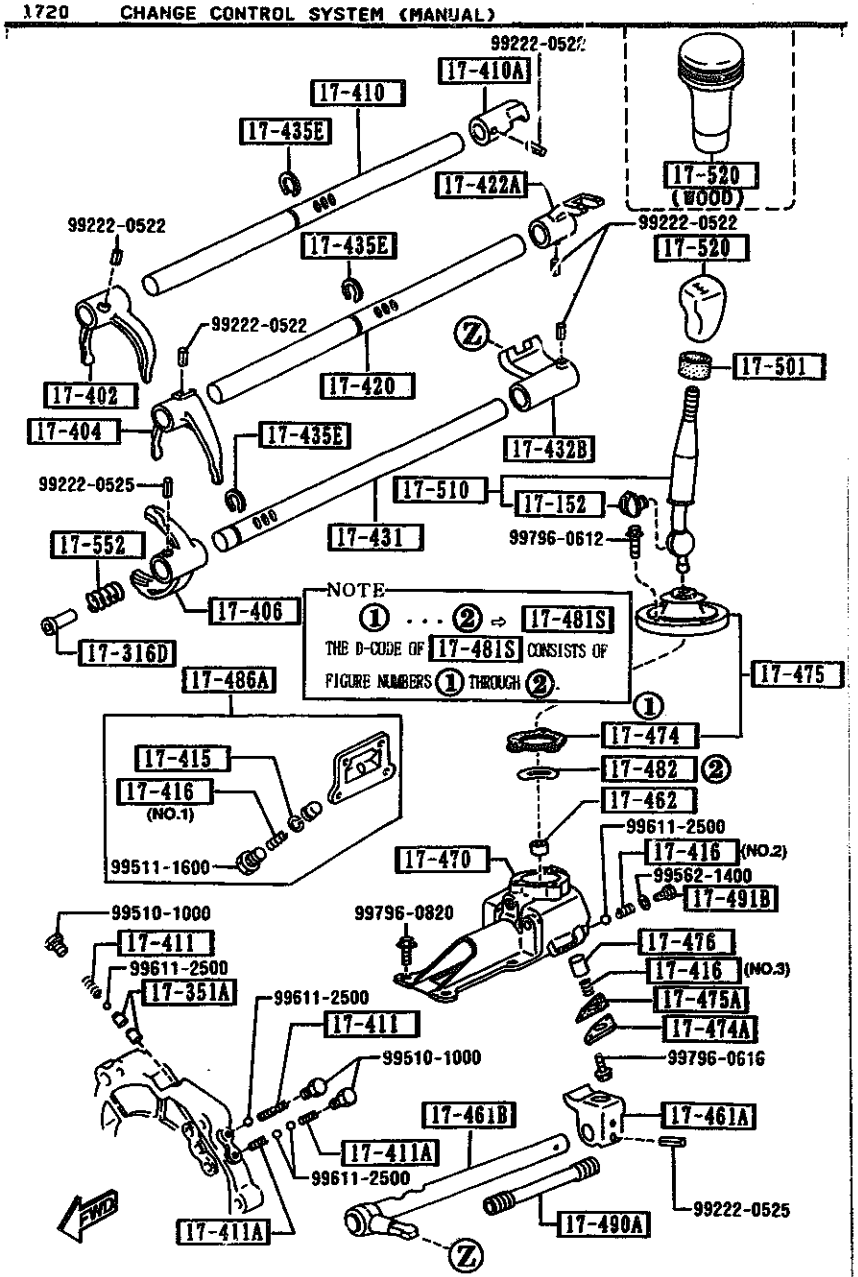

PART NO.	QTY	MODEL/RESTRICTION	MODEL/RESTRICTION	MODEL/RESTRICTION	FROM-TO
17-422A		END,S/ROD(3RD&4TH)			
M507-17-422	1				
17-431		ROD,SHIFT-OVER TOP & REVERSE			
M506-17-431A	1				
17-432B		END,SHIFT ROD(O/TOP& REV.)			
M508-17-432	1				
17-435E		RING,RETAINING			
R502-17-435	3				
17-461A		END,CONTROL LEVER			
M508-17-461	1				-3601
M508-17-461A	1				3601-
17-461B		ROD,CONTROL			
M516-17-450	1				-3601
M516-17-450A	1				3601-
17-462		SHEET,SPRING			
0398-17-462A	1				
17-470		CASE,CHANGE CONTROL			
M510-17-470C	1				
17-474		GASKET,COVER PLATE			
0303-17-474	1				
17-474A		CAP,SPRING			
M501-17-474	1				
17-474J		SHIM,ADJUST			
99963-3330	1	T=0.3MM			
17-475		BOOT,DUST-CHANGE LEVER			
M514-17-480A	1				-3201
M513-17-480A	1				3201-

3201 NA351*-413071
3601 NA351*-422220

1720 CHANGE CONTROL SYSTEM (MANUAL)

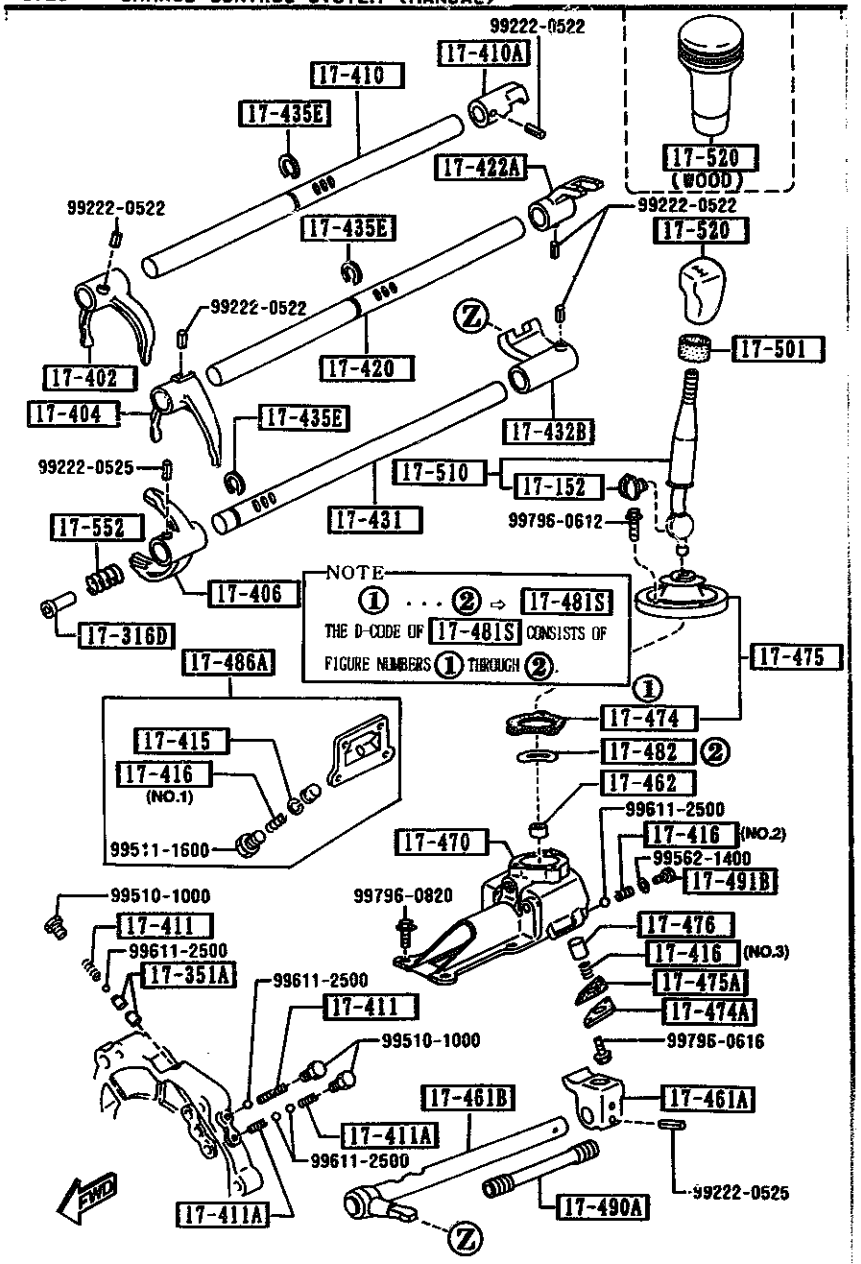

AUNA03

PART NO.	QTY	MODEL/RESTRICTION	MODEL/RESTRICTION	MODEL/RESTRICTION	FROM-TO
17-475A M501-17-475	1	GASKET,SPRING CAP			
17-476 M502-17-476A	1	SPINDLE,SELECT LOCK			
17-481S M505-99-178	1	BUSH SET,CHANGE LEVER			
17-482 M505-17-482	1	WASHER,WAVE-CHANGE CONT.CASE			
17-486A R501-17-47X	1	COVER,BLIND			
17-490A M504-17-490A	1	COVER,ROD			
17-491B 0183-17-491	1	CAP,SPRING			
17-501 M501-17-501	1	INSULATOR,CHG LEVER			
17-510 M524-17-510B AN(M524-17-510C)	1	LEVER,CHANGE			-3201
M524-17-510C	1				3201-
17-520 M515-17-520	1	KNOB,CHANGE LEVER BASE, (URETHANE)			
00	INT-	NA0 NA1 NA2 BLACK			
M517-17-520	1	OPT, (WOOD)			
M518-17-520A	1	PKG-C, RICO-20TH-ANV ., SPECIAL-ED, (LEATHER)			
17-552 M504-17-552	1	SPRING			

3201 NA351*-413071

1800 ENGINE ELECTRICAL SYSTEM

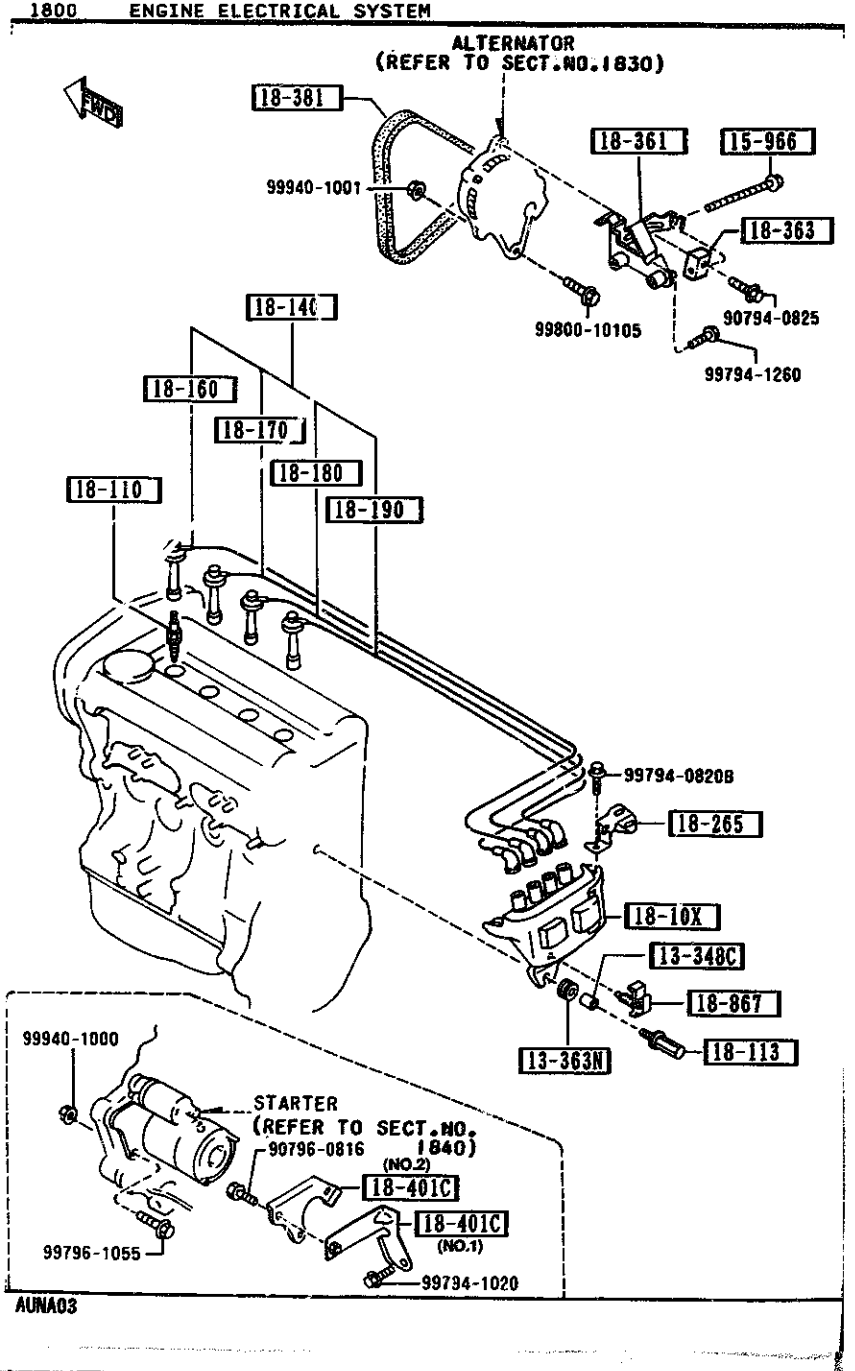

PART NO.	QTY	MODEL/RESTRICTION	MODEL/RESTRICTION	MODEL/RESTRICTION	FROM-TO
13-348C		SPACER			
B61P-13-348	1				
13-363N		RUBBER,MOUNTING			
B61P-13-363A	1				
15-966		BOLT,ADJUST			
FE38-15-966	1				
18-10X		COIL & IGNITER			
B61P-18-10XD	1				
18-110		PLUG,SPARK			
BP01-18-110	4	BKR5E-11 NGK (STD.)			
BP02-18-110	4	K16PR-U11 ND (STD.)			
BP03-18-110	4	BKR6E-11 NGK (OPTION COLD TYPE)			
BP04-18-110	4	K20PR-U11 ND (OPTION COLD TYPE)			
BP05-18-110	4	BKR7E-11 NGK (OPTION COLD TYPE)			
BP06-18-110	4	K22PR-U11 ND (OPTION COLD TYPE)			
18-113		BOLT			
B61P-18-1A5A	1				
18-140		CORD SET,HI.TENSION			
B61P-18-140C	1				
18-160		CORD NO.1,HI.TENSION			
B61P-18-160C	1				
18-170		CORD NO.2,HI.TENSION			
B61P-18-170B	1				
18-180		CORD NO.3,HI.TENSION			
B61P-18-180B	1				
18-190		CORD NO.4,HI.TENSION			

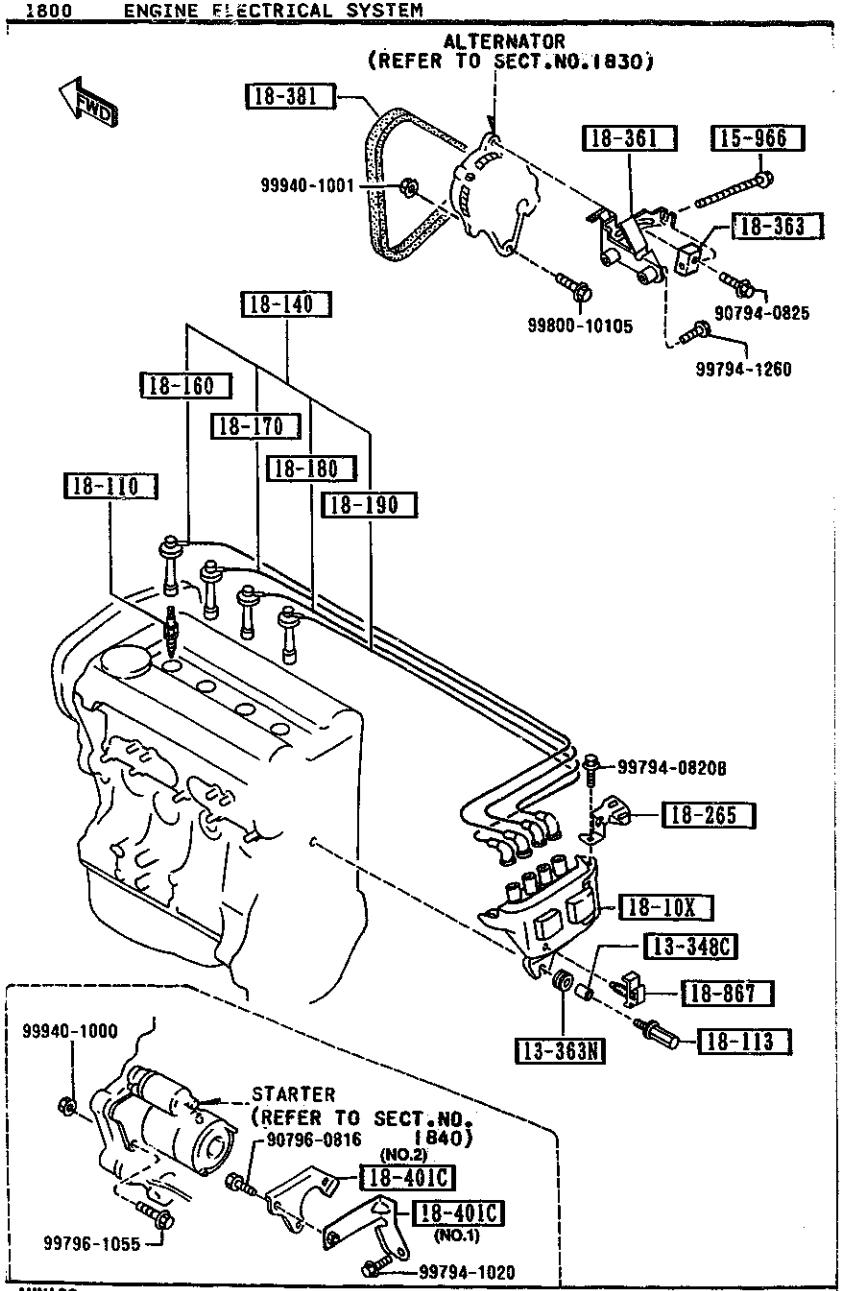

AUNA03

PART NO.	QTY	MODEL/RESTRICTION	MODEL/RESTRICTION	MODEL/RESTRICTION	FROM-TO
CONT'D					
B61P-18-190C	1				
18-265		CLIP,COUPLER			
B61R-18-266A	1				
18-361		STRAP,ALTERNATOR			
B61P-18-360A	1				
18-363		SPACER,STRAP			
F201-18-363	1				-3506
FP02-18-363	1				3506-
18-381		BELT'V'			
B6S7-18-381B	1	AUTO-FLEX-3 A-34.7			
18-401C		BRACKET,STARTER			
B61P-18-410	1	(ILLUST. NO.1)			
B660-18-411C	1	(ILLUST. NO.2)			
18-867		CLIP			
FE30-18-867A	1				

3506 NA351*-420224

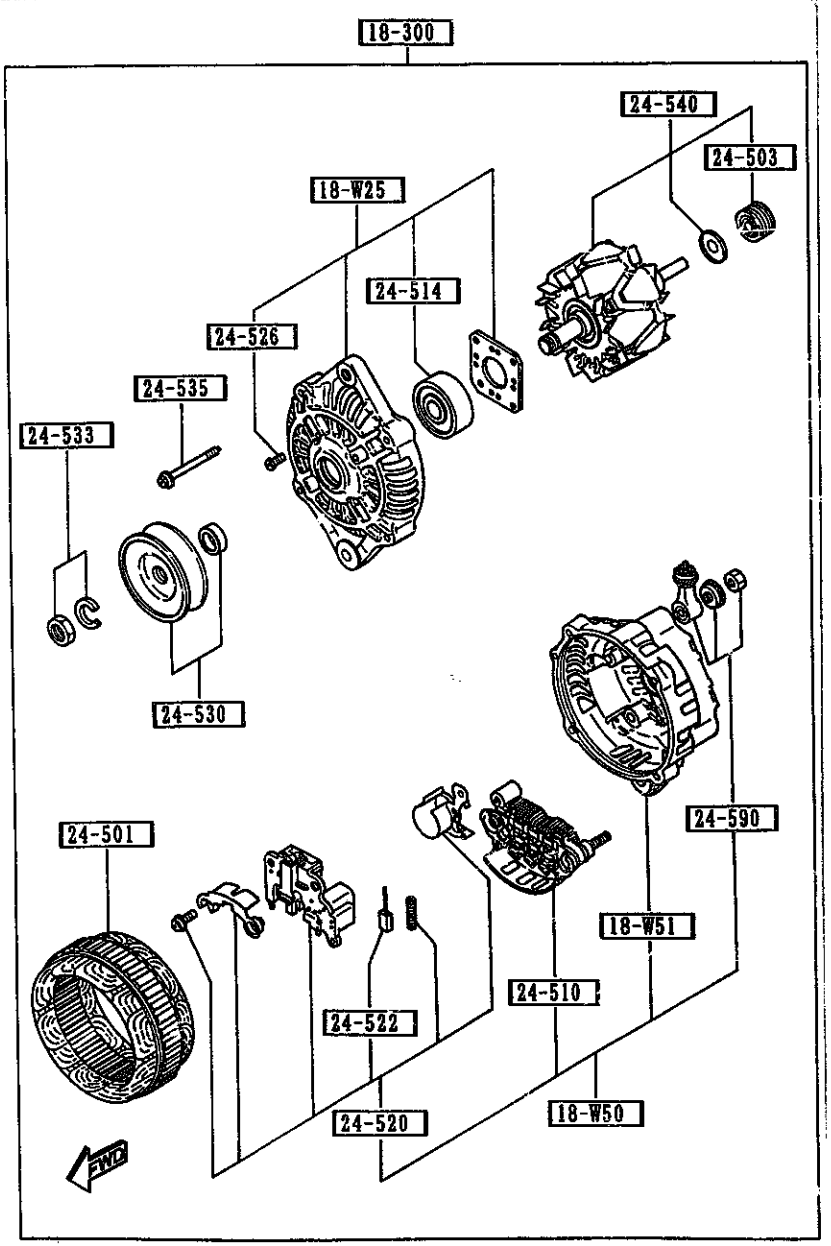

AUNA03

1830 -1 ALTERNATOR

PART NO.	QTY	MODEL/RESTRICTION	MODEL/RESTRICTION	MODEL/RESTRICTION	FROM-TO
18-W25		COVER,FRONT-ALTERNATOR			
B64J-18-W25	1				
18-W50		COVER,REAR-ALTERNATOR			
B61P-18-W50A	1	(MT)			
B64J-18-W50A	1	(AT)			
18-W51		COVER,REAR-ALTERNATOR			
B3C7-18-W51	1				
18-300		ALTERNATOR			
B61P-18-300E	1	(MT)			
B64J-18-300B	1	(AT)			
24-501		STATOR			
B366-18-W45	1	(AT)			
G608-18-W45	1	(MT)			
24-503		BEARING,BALL-ALT. REAR			
N336-18-W36	1				
24-510		RECTIFIER			
B61R-18-W60	1	(MT)			
B64J-18-W60	1	(AT)			
24-514		BEARING,BALL-ALT. FRONT			
PN16-18-W27	1				
24-520		REGULATOR,VOLTAGE			
B64J-18-W70A	1				
24-522		BRUSH			
B3C7-18-W77	2				
24-526		SCREW SET			
RF71-18-W26	1				
24-530		PULLEY			
B61P-18-W10	1				

CAT. AUNA03-04

1994-10

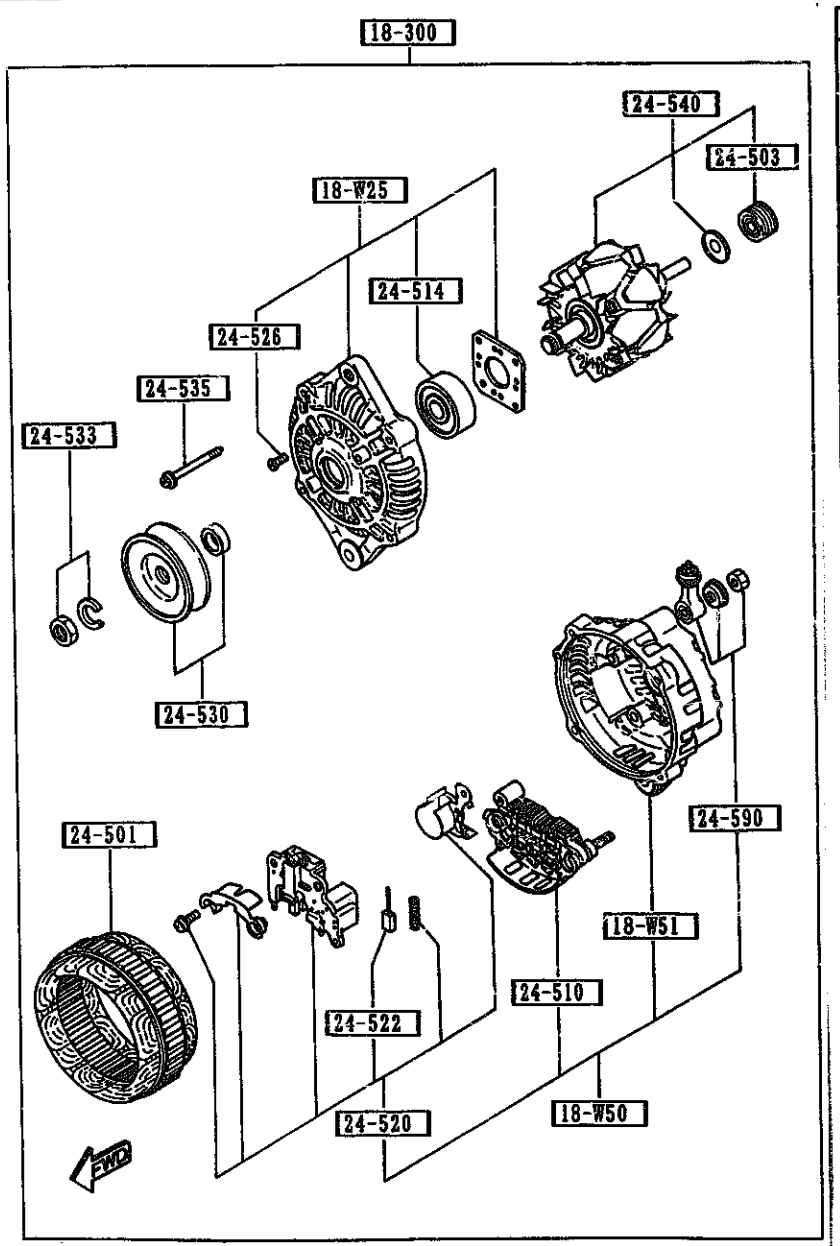

AUNA03

PART NO.	QTY	MODEL/RESTRICTION	MODEL/RESTRICTION	MODEL/RESTRICTION	FROM-TO
24-533		NUT SET			
B3C7-18-W05	1				
24-535		SCREW SET			
RF71-18-W20	1				
24-540		ROTOR			
B61R-18-W35A	1	(MT)			
B64J-18-W35A	1	(AT)			
24-590		TERMINAL SET			
N337-18-W80	1				

CAT. AUNA03-04

1994-10

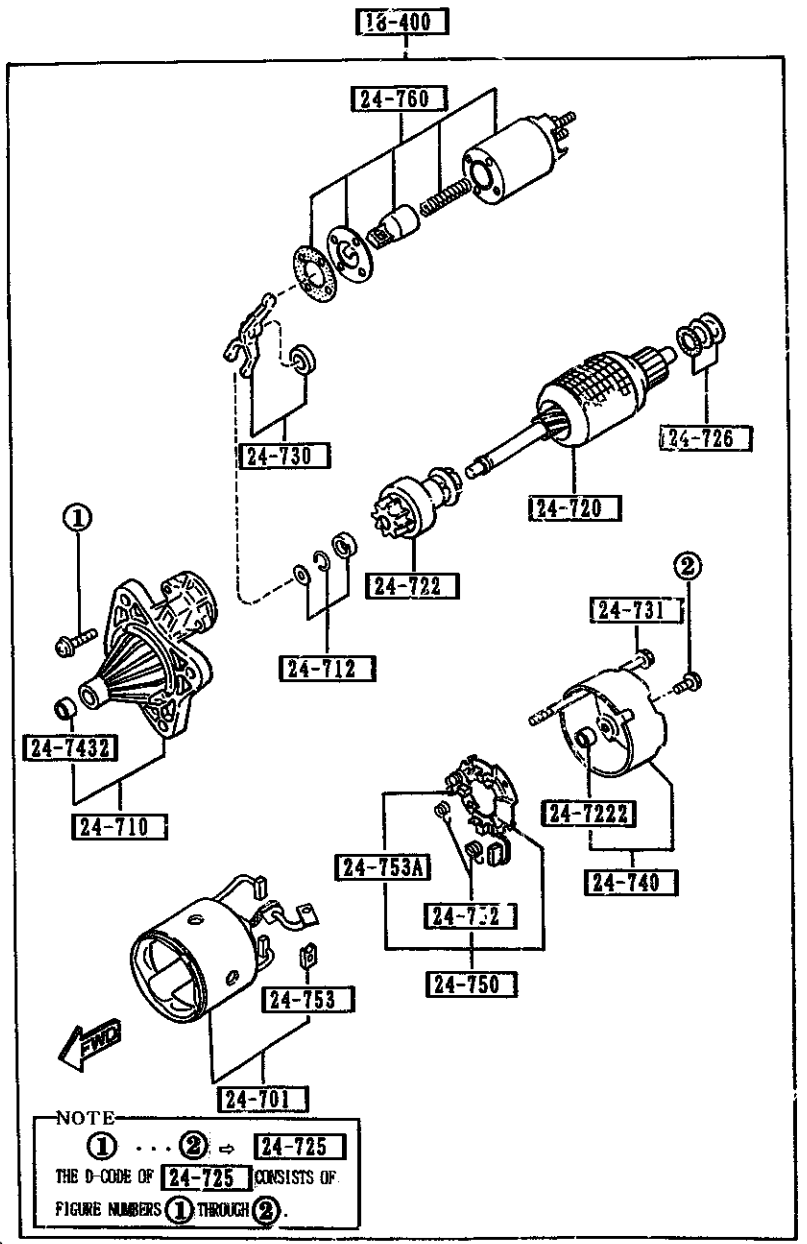

AUNA03

PART NO.	QTY	MODEL/RESTRICTION	MODEL/RESTRICTION	MODEL/RESTRICTION	FROM-TO
18-400		STARTER			
B61R-18-400A	1	NON ASBESTOS			
24-701		YOKE			
B61R-18-X65	1				
24-710		BRACKET,FRONT			
B61R-18-X00	1				
24-712		STOPPER SET			
E356-18-X30	1				
24-720		ARMATURE			
B6S8-18-X60	1	NON ASBESTOS			
24-722		CLUTCH,OVER RUNNING			
B630-18-X45	1				
24-7222		SLEEVE,BEARING-REAR			
E356-18-X81	1				
24-725		SCREW SET			
E356-18-X95	1				
24-726		WASHER SET			
E356-18-X92	1				
24-730		LEVER			
E356-18-X05	1				
24-731		BOLT SET			
B630-18-X90	2				
24-740		BRACKET,REAR			
E356-18-X60	1				
24-7432		SLEEVE,BEARING-FRONT			
F210-18-X01	1				

CAT. AUNA03-04

1994-10

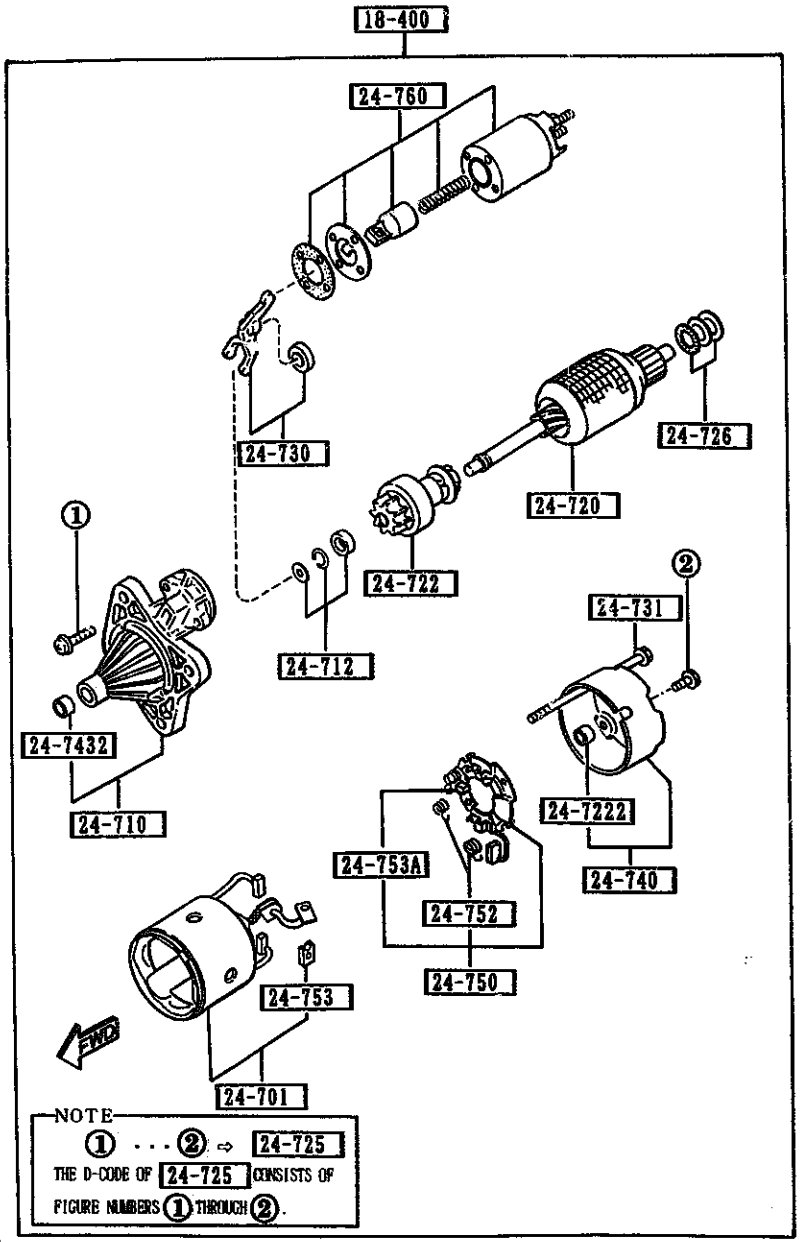

AUNA03

PART NO.	QTY	MODEL/RESTRICTION	MODEL/RESTRICTION	MODEL/RESTRICTION	FROM-TO
24-750		HOLDER,BRUSH			
B61R-18-X70	1				
24-752		SPRING,BRUSH			
0222-24-752A	4				
24-753		BRUSH,YOKE			
B630-18-X66	2				
24-753A		BRUSH			
B660-18-X66	2				
24-760		SWITCH			
E356-18-X10	1				

1850 BATTERY

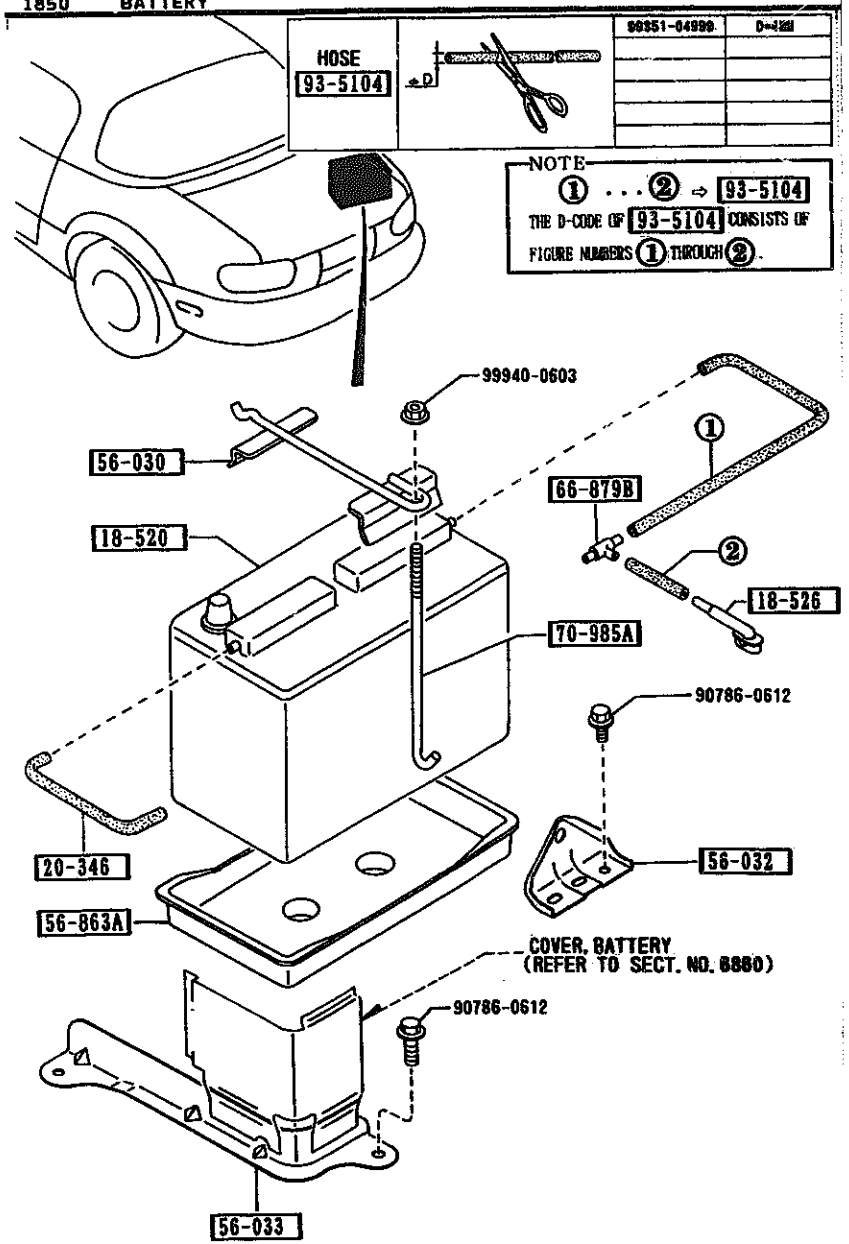

PART NO.	QTY	MODEL/RESTRICTION	MODEL/RESTRICTION	MODEL/RESTRICTION	FROM-TO
18-520		BATTERY			
B6AC-18-520	1	S46A24L(S) PANASONIC			
18-526		CONNECTOR,TUBE-BATTERY			
B61P-18-526	1				
20-346		TUBE,VACUUM			
B61P-18-524	1				
56-030		CLAMP,BATTERY			
NA01-56-03XA	1				
56-032		BRACKET,BATTERY CLAMP			
NA01-56-032A	1				
56-033		BRACKET,STOPPER-BATTERY			
NA01-56-033A	1				
56-863A		TRAY,BATTERY			
B095-56-032	1				
66-879B		JOINT			
0813-66-879	2				
70-985A		BOLT,CLAMP			
0259-54-292A	1				
93-5104		HOSE			
99351-04999	1				

1910 TORQUE CONVERTER,OIL PUMP & PIPINGS (AUTOMATIC)

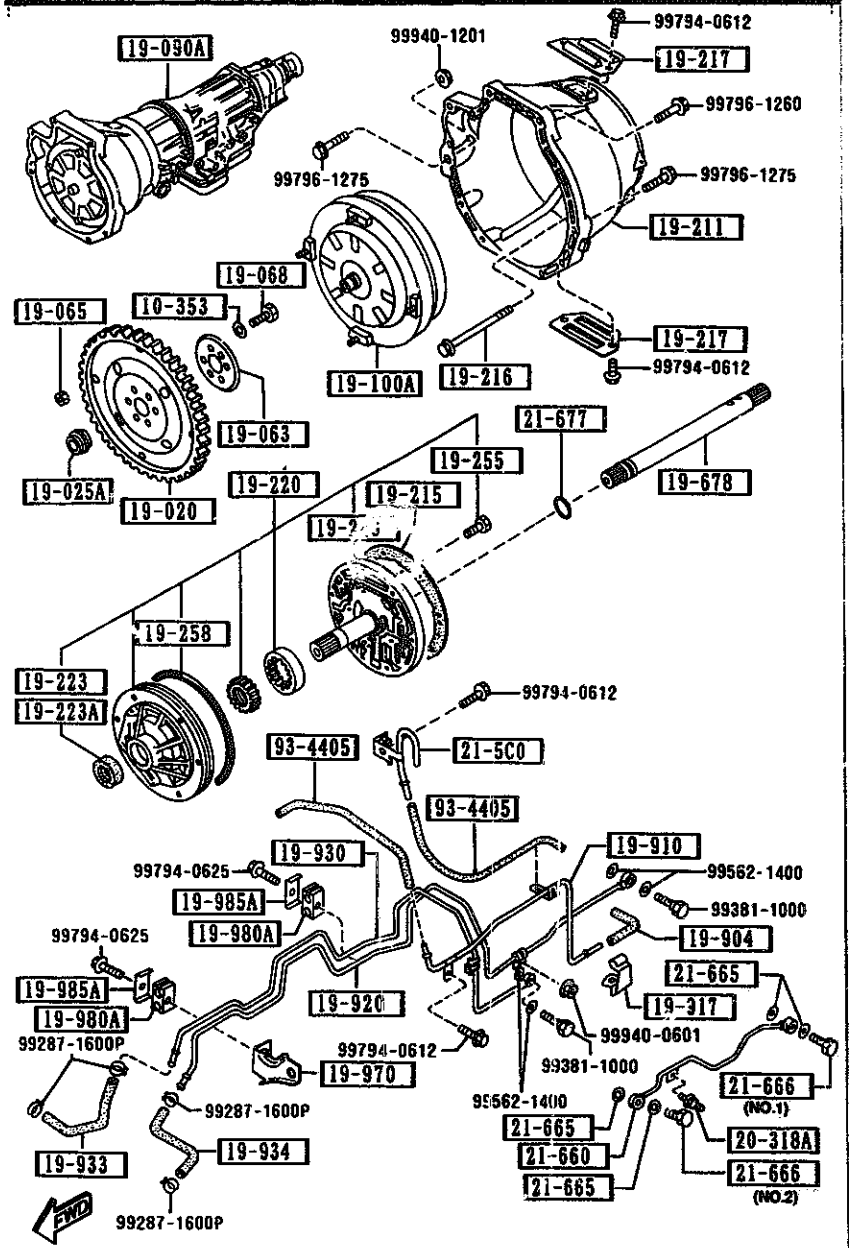

AUNA03

1910 -1 TORQUE CONVERTER,OIL PUMP & PIPINGS (AUTOMATIC)

PART NO.	QTY	MODEL/RESTRICTION	MODEL/RESTRICTION	MODEL/RESTRICTION	FROM-TO
10-353		WASHER,PLAIN			
0290-10-353	6				
19-020		PLATE,DRIVE			
BU55-19-020	1				
19-025A		ADAPTER,DRIVE PLATE			
FU60-19-025	1				
19-063		PLATE,BACKING			
FT31-19-063	1				
19-065		NUT			
FU51-19-065	4				
19-068		BOLT,LOCK			
FT31-19-064	6				
19-090A		T/MISSION CPT.			
BUY2-19-090A (BUY2-19-090B)	1				-2C07
BUY2-19-090B	1				2C07-
19-100A		CONVERTER,TORQUE			
BU55-19-100	1				
19-211		HOUSING,CONVERTER			
BU55-19-211	1				
19-215		GASKET,OIL PUMP			
BU01-19-215	1	ASBESTOS			-2C07
BU46-19-215	1	NON ASBESTOS			2C07-
19-216		BOLT			
BU01-19-216	6				
19-217		COVER,BLIND			
BU55-19-217	2				

2C07 NA351×-607852

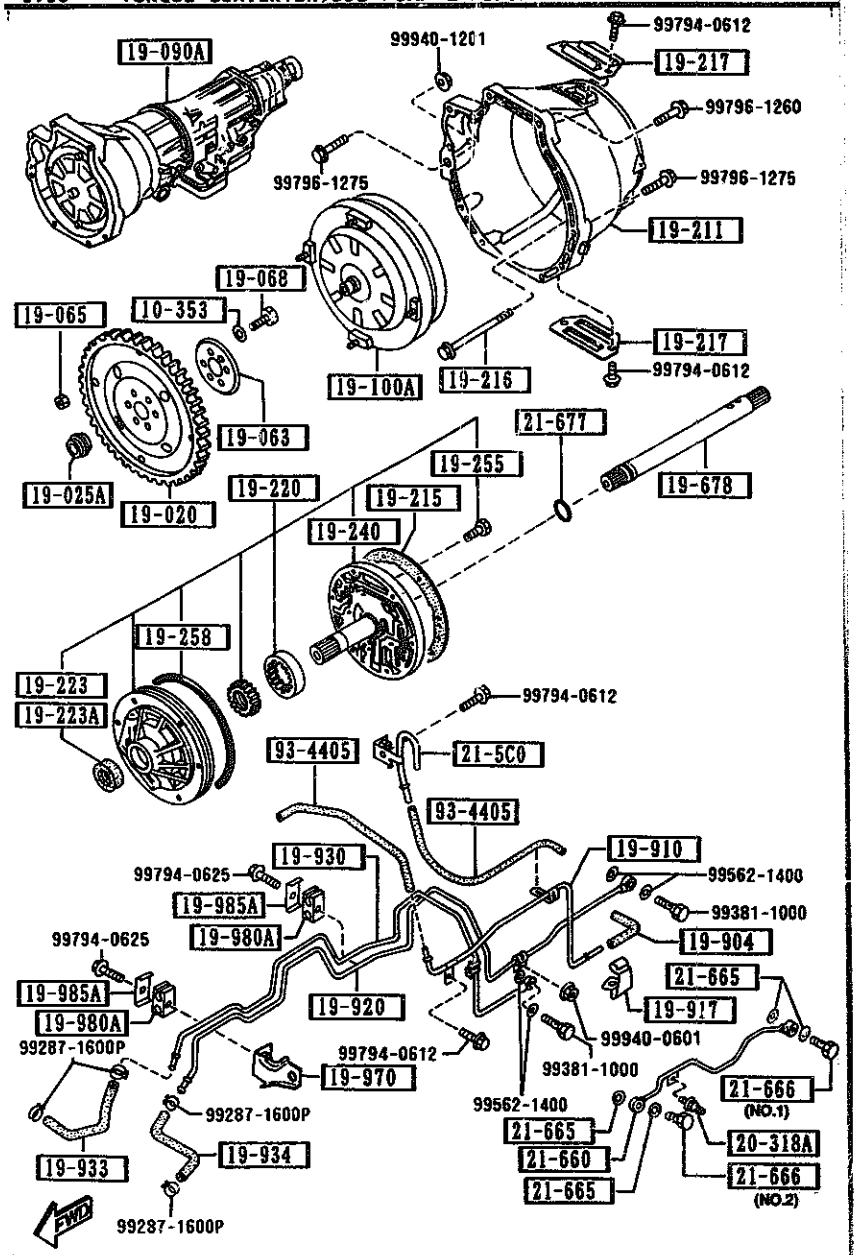

AUNA03

1910 -2 TORQUE CONVERTER,OIL PUMP & PIPINGS (AUTOMATIC)

PART NO.	QTY	MODEL/RESTRICTION	MODEL/RESTRICTION	MODEL/RESTRICTION	FROM-TO
19-220		PUMP,OIL			
BU55-19-220A	1				
19-223		SEAL,OIL			
BU55-19-223	1	JATCO			
19-223A		SEAL,OIL			
0338-19-223A	1	NOK			
19-240		COVER,OIL PUMP			
BU55-19-240A	1				
19-255		BOLT			
0338-19-255	5				
19-258		SEAL,CUT RING			
0338-19-258	1				
19-678		SHAFT,INPUT			
BU55-21-678	1				
19-904		HOSE,VACUUM			
0338-19-904A	1				
19-910		PIPE,VACUUM			
BU55-19-910A	1				
19-917		CLIP			
BU17-19-917	1				-3621
0436-19-917	1				3621-
19-920		PIPE,OIL			
BU55-19-920C	1				
19-930		PIPE,OIL			
BU55-19-930C	1				
19-933		HOSE,OIL			
BU55-19-933A	1				

3621 NA351*-423253

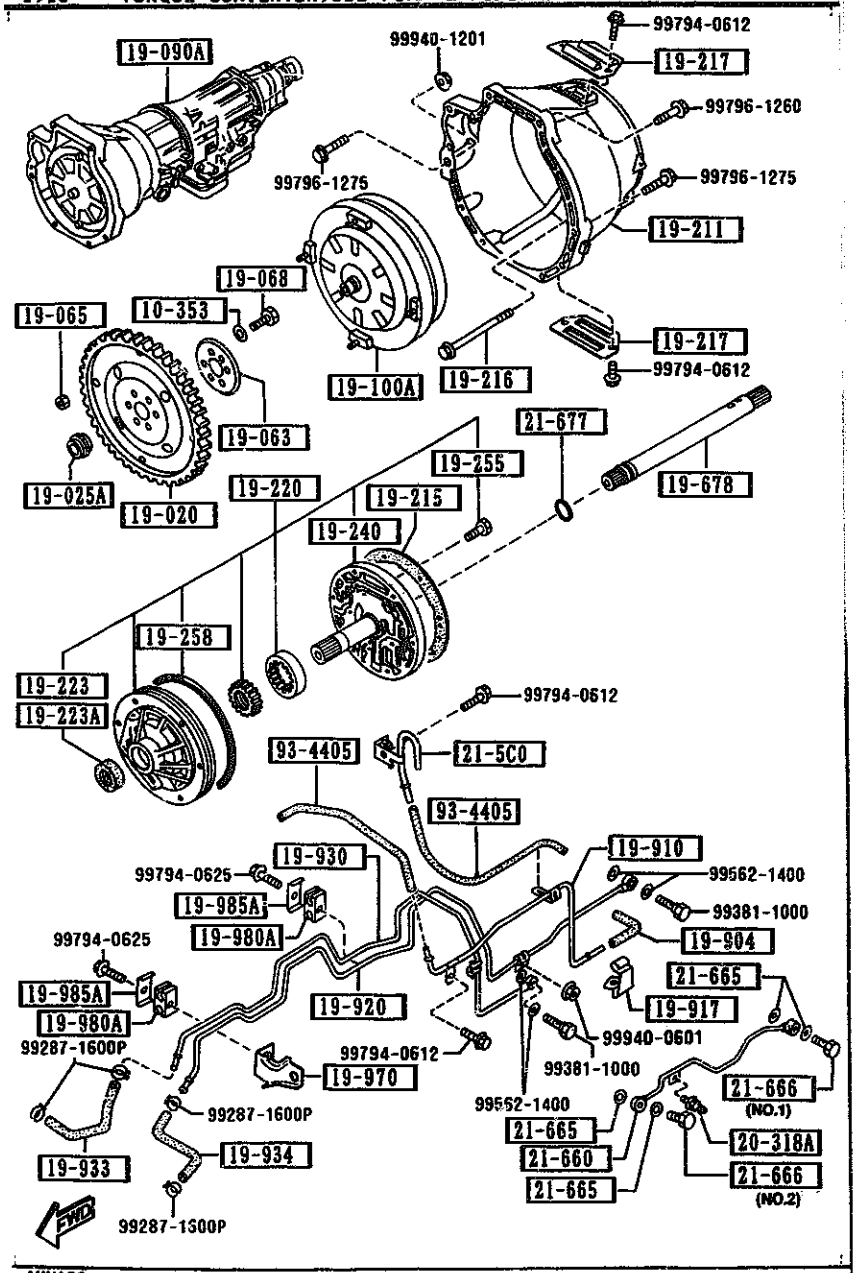

AUNA03

1910 -3 ※ TORQUE CONVERTER,OIL PUMP & PIPINGS (AUTOMATIC)

PART NO.	QTY	MODEL/RESTRICTION	MODEL/RESTRICTION	MODEL/RESTRICTION	FROM-TO
19-934		HOSE,OIL			
BU55-19-934A	1				
19-970		BRACKET			
BU55-19-970A	1				
19-980A		SUPPORT,OIL PIPE			
BU29-19-980	2				
19-985A		CLIP,OIL PIPE			
BU29-19-985	2				
20-318A		BOLT			
BU27-19-838	1				
21-5C0		BREATHER			
BU55-21-5C0A	1				
21-660		TUBE,GOVERNOR			
BU55-21-660	1				
21-665		WASHER,SEAL			
BU01-21-665	4				
21-666		BOLT,CONNECTOR			
BU01-21-666	1	(ILLUST. NO.1)			
BU17-21-666	1	(ILLUST. NO.2)			
21-677		RING,'O'			
BU01-21-677	1				
93-4405		HOSE			
99344-05150	2				

1920 TRANSMISSION CASE & MAIN CONTROL SYSTEM (AUTOMATIC)

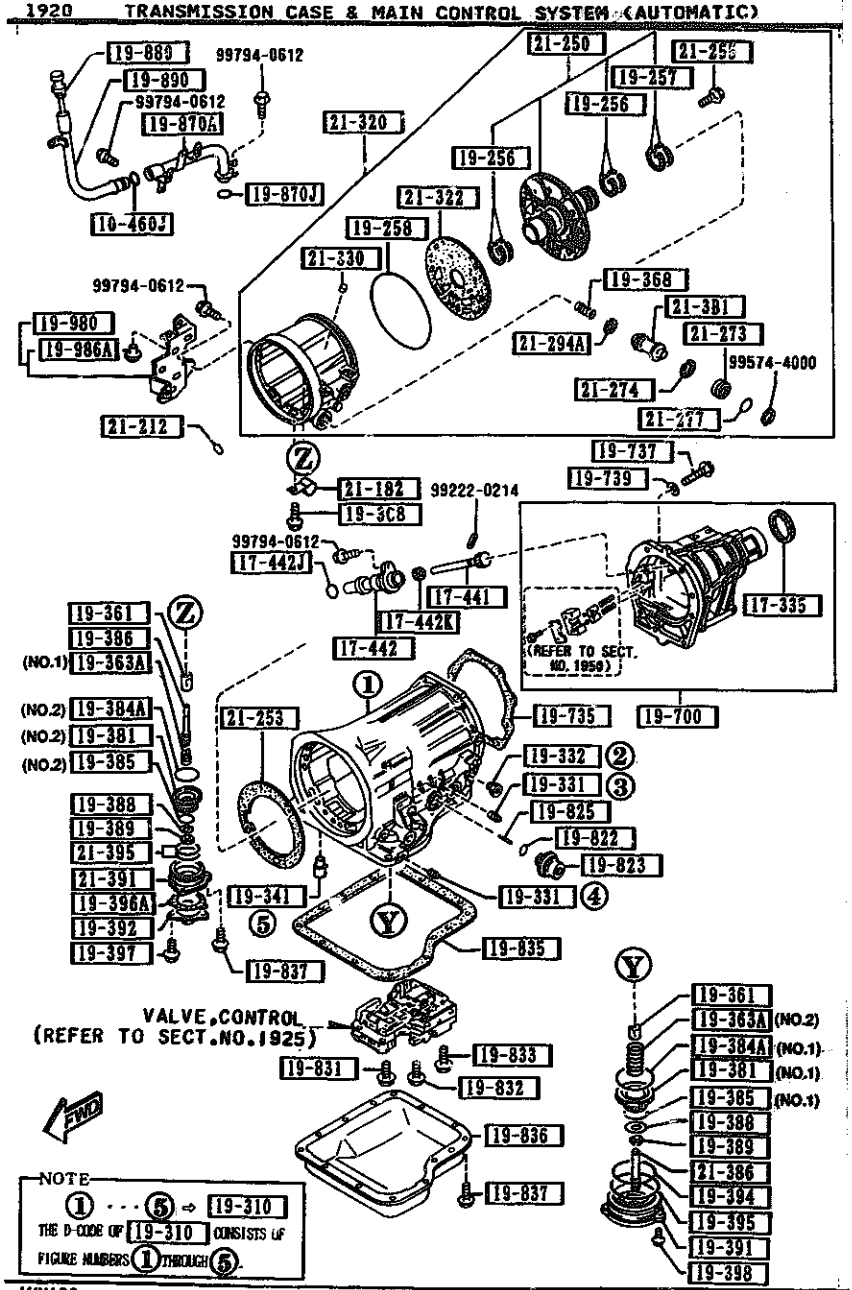

AUNA03

PART NO.	QTY	MODEL/RESTRICTION	MODEL/RESTRICTION	MODEL/RESTRICTION	FROM-TO
10-460J 99541-01201	1	RING,'O'			
17-335 M507-17-335A	1	SEAL,OIL			
17-441 BU55-17-441	1	GEAR,DRIVEN			
17-442 BU55-17-442	1	SLEEVE,SPEEDOMETER			
17-442J 1011-17-443	1	RING,'O'			
17-442K 99586-08166	1	SEAL,OIL			
19-256 BU01-19-256	4	RING,SEAL			
19-257 BU01-19-257	2	RING,SEAL			
19-258 0338-19-258	1	SEAL,CUT RING			
19-3C8 BU55-19-3C8	1	BOLT,BAFFLE PLATE			
19-310 BU55-19-310A	1	CASE,T/MISSION			
19-331 0338-19-331A	2	PLUG,SQUARE HEAD			
19-332 BU01-19-332A	1	CONNECTOR,STRAIGHT			
19-341 0338-19-341	1	BOLT,ANCHOR END			

1920 TRANSMISSION CASE & MAIN CONTROL SYSTEM (AUTOMATIC)

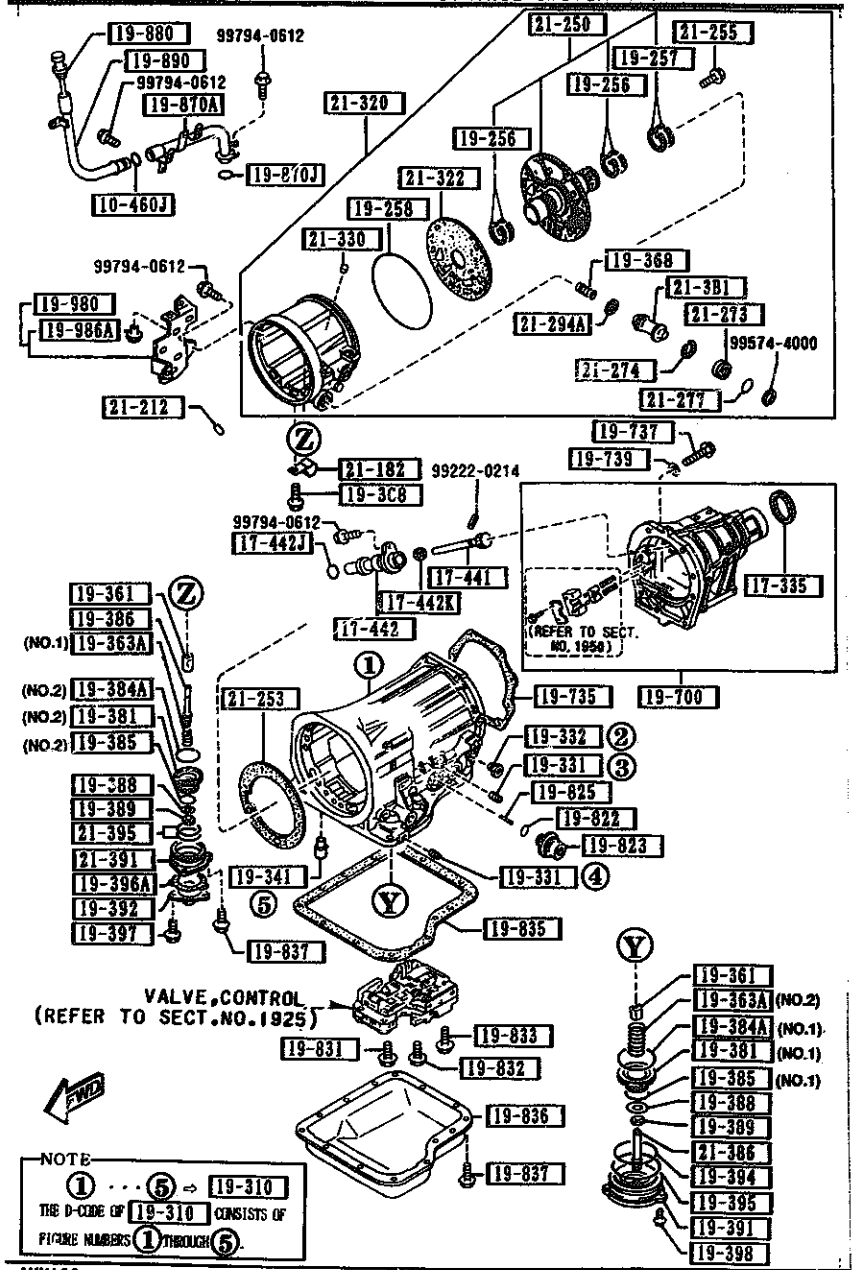

AUNA03

PART NO.	QTY	MODEL/RESTRICTION	MODEL/RESTRICTION	MODEL/RESTRICTION	FROM-TO
19-361		STRUT,BAND			
0338-19-361B	2				
19-363A		SPRING,PISTON RETURN			
BU55-19-3F3	1	(ILLUST. NO.1)			
BU17-19-363	1	(ILLUST. NO.2)			
19-368		SPRING,CUSHION-PSTN. STEM			
BU20-19-368	1				
19-381		PISTON,BAND SERVO			
BU06-19-381	1	(ILLUST. NO.1)			
BV03-19-381	1	(ILLUST. NO.2)			
19-384A		SEAL,PISTON			
BU10-19-384	1	(ILLUST. NO.1)			
BU55-19-384	1	(ILLUST. NO.2)			
19-385		SEAL,PISTON			
FT03-19-385	1	D=44MM (ILLUST. NO.1)			
0842-19-385	1	D=36MM (ILLUST. NO.2)			
19-386		STEM,PISTON			
0338-19-386A	1				
19-388		WASHER,PLAIN			
0338-19-388A	2				
19-389		NUT			
0338-19-389	2				
19-391		RETAINER,SERVO			
BU06-19-391	1				
19-392		COVER,SERVO			
1758-19-392A	1				
19-394		SEAL,LATHE CUT			
0842-19-394	1				

1920 TRANSMISSION CASE & MAIN CONTROL SYSTEM (AUTOMATIC)

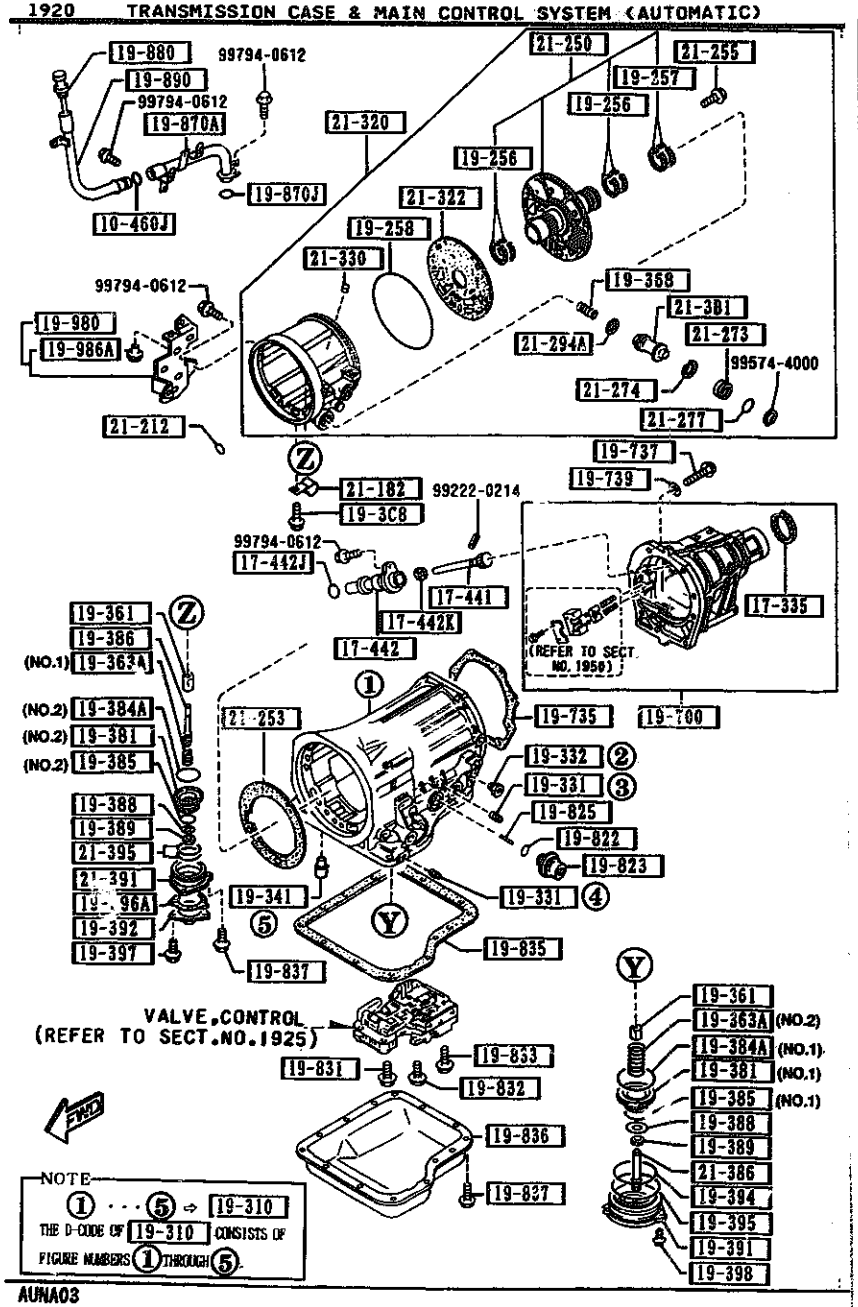

AUNA03

PART NO.	QTY	MODEL/RESTRICTION	MODEL/RESTRICTION	MODEL/RESTRICTION	FROM-TO
19-395		RING,'O'			
0338-19-395	1				
19-396A		GASKET			
1758-19-394A	1	ASBESTOS			-2C07
BU46-19-3J4	1	NON ASBESTOS			2C07-
19-397		BOLT			
1758-19-397	3				
19-398		BOLT			
0338-19-398					
19-700		HOUSING,EXTENSION			
BUY2-19-7A0	1				
19-735		GASKET,EXTENSION			
0338-19-735	1	ASBESTOS			-2C07
BT28-19-735	1	NON ASBESTOS			2C07-
19-737		BOLT			
0338-19-737	8				
19-739		WASHER,PLAIN			
0338-19-739	8				
19-822		SEAL,'O'RING			
0338-19-822	1				
19-823		DIAPHRAGM,VACUUM			
BU55-19-823	1				
19-825		ROD,DIAPHRAGM			
BU55-19-825	1	L=29.75MM			
0338-19-825	1	L=30MM			
0338-19-826	1	L=31MM			

2C07 NA351×-407852

1920 TRANSMISSION CASE & MAIN CONTROL SYSTEM (AUTOMATIC)

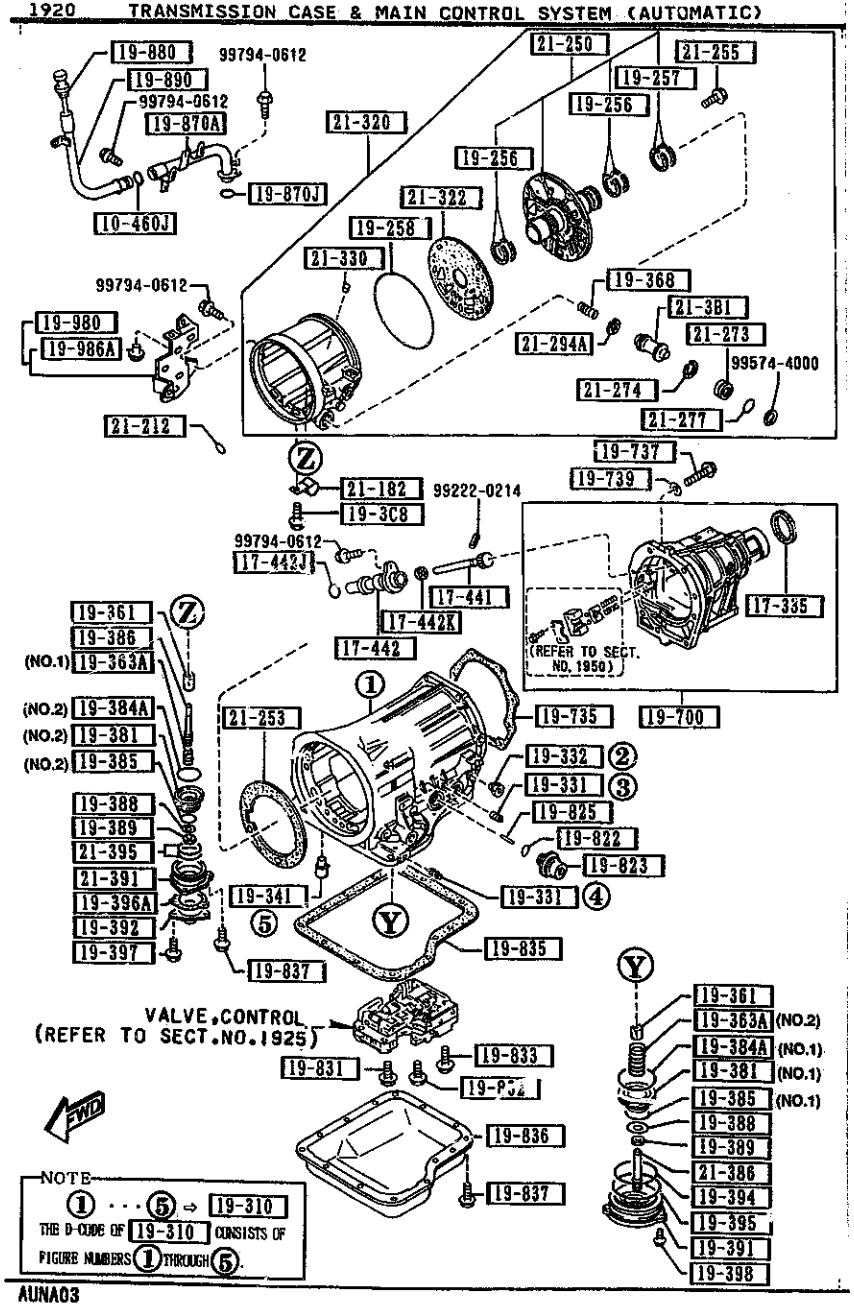

AUNA03

PART NO.	QTY	MODEL/RESTRICTION	MODEL/RESTRICTION	MODEL/RESTRICTION	FROM-TO
CONT'D					
0338-19-827	1	L=30.5MM			
0338-19-828	1	L=29MM			
0338-19-829	1	L=29.5MM			
19-831		BOLT,CONTROL VALVE			
0338-19-831	2				
19-832		BOLT,CONTROL VALVE			
0338-19-832	2				
19-833		BOLT,CONTROL VALVE			
0338-19-833	3				
19-835		GASKET,OIL PAN			
0338-19-835B	1	ASBESTOS			-2C07
BT28-19-835	1	NON ASBESTOS			2C07-
19-836		PAN,OIL			
0338-19-836A	1				
19-837		BOLT,OIL PAN			
0338-19-837	17				
19-870A		TUBE,FILLER			
BU55-19-870	1				
19-870J		RING,'O'			
99541-01601	1				
19-880		GAUGE,OIL LEVEL			
BU17-19-880B	1				
19-890		TUBE,OIL FILTER-UPPER			
BU55-19-890	1				
19-980		BRACKET			
BU55-19-980A	1				

2C07 NA351*-407852

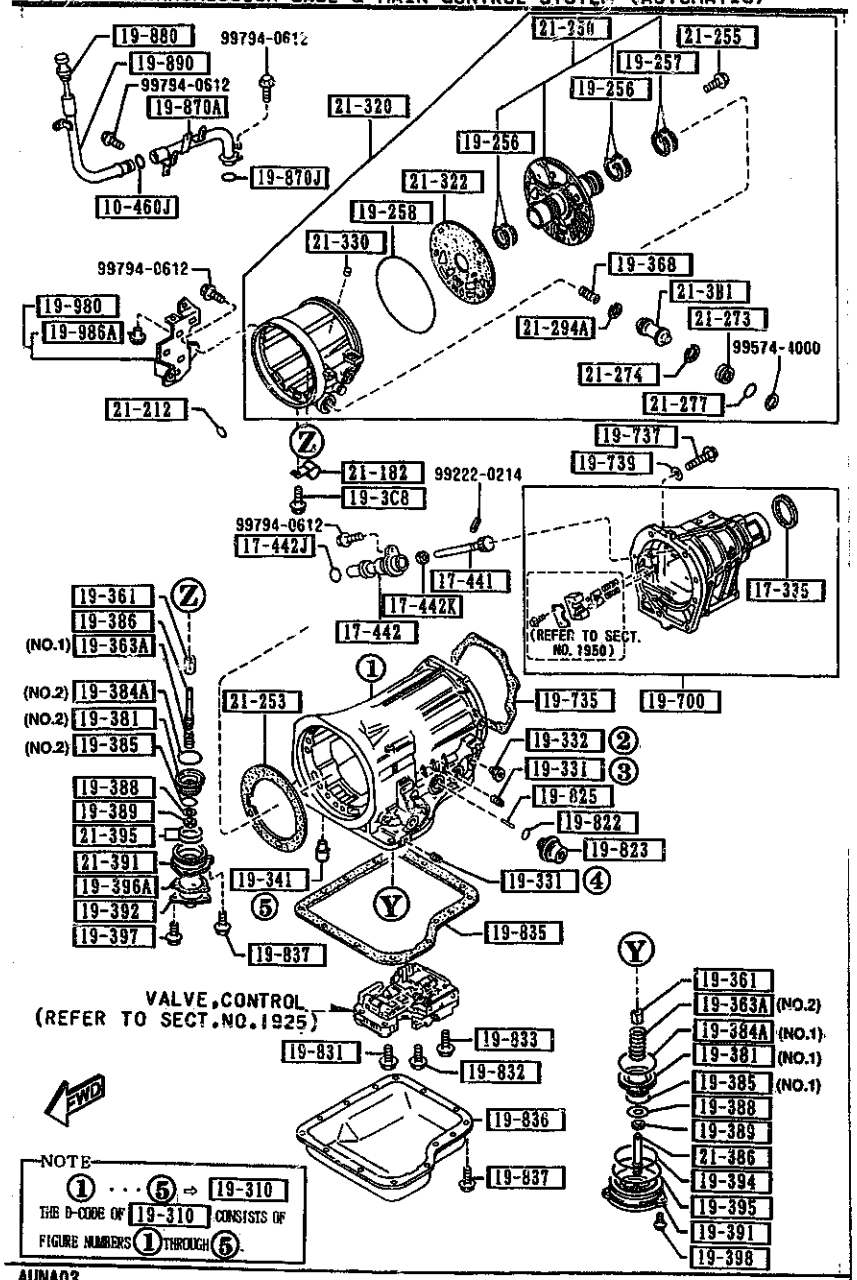

AUNA03

PART NO.	QTY	MODEL/RESTRICTION	MODEL/RESTRICTION	MODEL/RESTRICTION	FROM-TO
19-986A		BUSH,RUBBER			
BV01-19-986	1				
21-182		BRACKET			
BU55-21-182	1				
21-212		RING,'O'			
BU01-21-212	2				
21-250		SUPPORT,DRUM			
BU55-21-250	1				
21-253		GASKET,DRUM SUPPORT			
BU01-21-253	1	ASBESTOS			-2C07
BU46-21-2F3	1	NON ASBESTOS			2C07-
21-255		BOLT			
BU01-21-255	5				
21-273		PLUG,ACCUMULATOR			
BU01-21-273	3				
21-274		SEAL,'O'RING			
BU01-21-274	1				
21-277		RING,'O'			
BU01-21-277	1				
21-294A		RING,SEAL			
BU55-21-293	1				
21-3B1		PISTON,ACCUMULATOR			
BU55-21-3B1	1				
21-320		CASE,OVER DRIVE			
BU55-21-320 A (BU55-21-320A)	1				-2C07
BU55-21-320A	1				2C07-

2C07 NA351*-407852

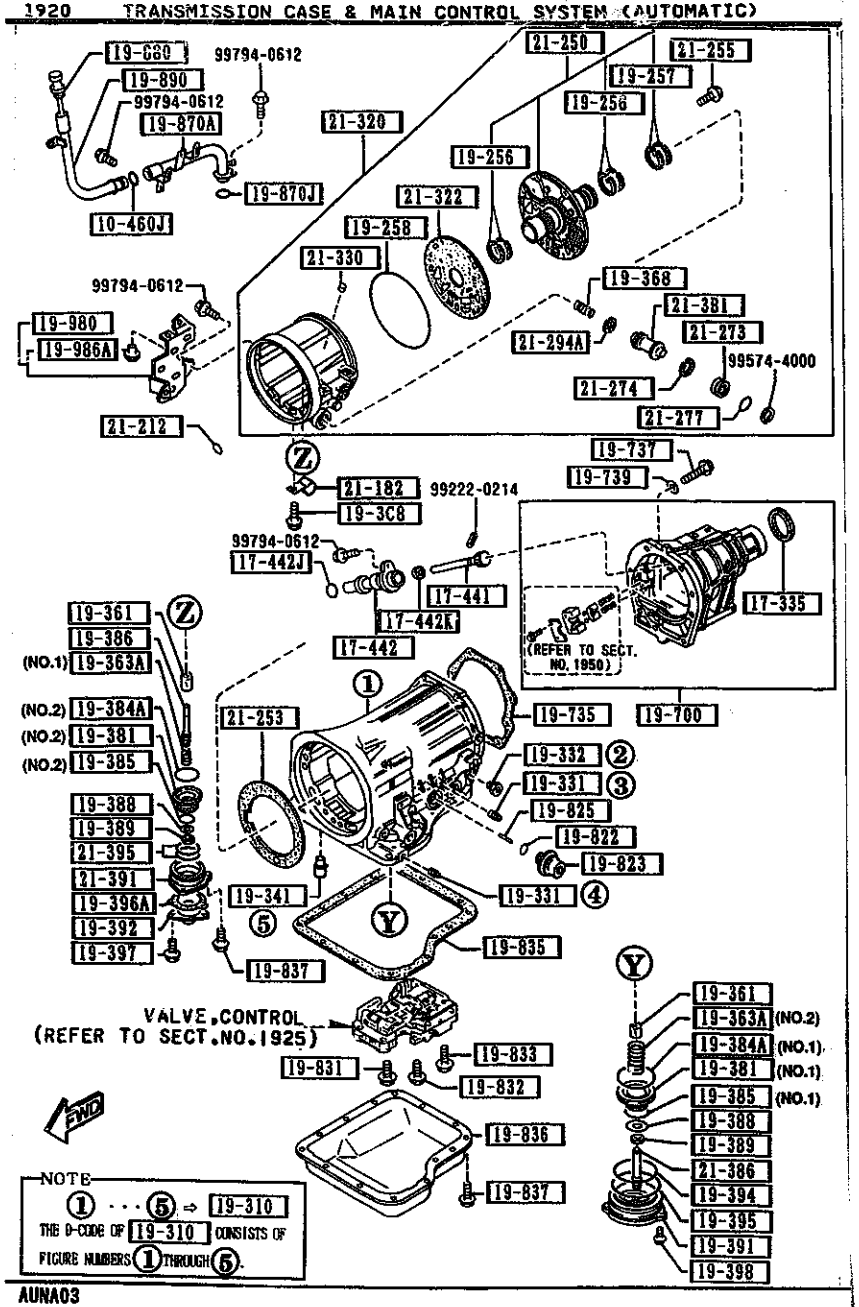

AUNA03

PART NO.	QTY	MODEL/RESTRICTION	MODEL/RESTRICTION	MODEL/RESTRICTION	FROM-TO
21-322		GASKET,O/DRIVE CASE			
BU01-21-322	1				-2C07
BU46-21-3C2	1				2C07-
21-330		VALVE,ONE WAY			
BV01-21-330	1				
21-386		STEM,PISTON BAND			
BU01-21-386	1				
21-391		RETAINER,SERVO			
BV02-21-391	1				
21-395		RING,'O'			
BU01-21-395	2				

2C07 NA351*-407852

1925 CONTROL VALVE (AUTOMATIC)

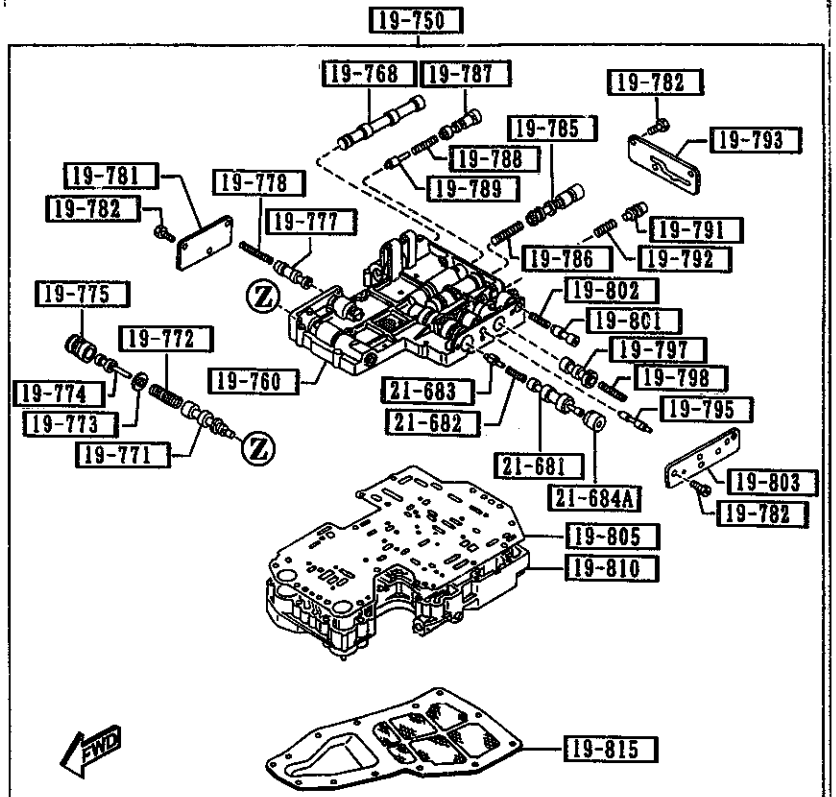

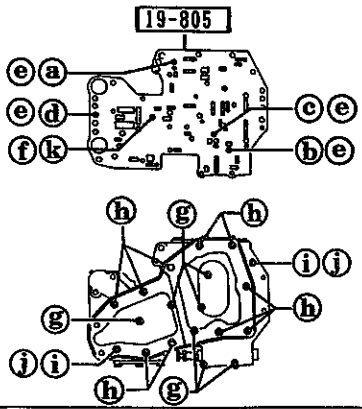

a		19-8A4	D=1.1mm
b		19-8B1	D=2.0mm
c		19-807	D=1.5mm (NO.1)
d		19-807	D=1.8mm (NO.2)
e		19-808	D=4.77mm L=15.6mm
f		19-814	D=5.6mm L=26.8mm
g		19-816	M5, L=25mm
h		19-817	M5, L=40mm
i		19-818	M6, L=57mm
j		19-819	
k		99611-2000	

AUNA03

1925 -1 CONTROL VALVE (AUTOMATIC)

PART NO.	QTY	MODEL/RESTRICTION	MODEL/RESTRICTION	MODEL/RESTRICTION	FROM-TO
19-750		VALVE,CONTROL			
BU55-19-750	1				
19-760		BODY,CONTROL VALVE-UP			
BU55-19-760	1				
19-768		VALVE,MANUAL			
0338-19-768	1				
19-771		VALVE,REGULATOR			
BU01-19-771	1				
19-772		SPRING,REGULATOR			
0338-19-772	1				
19-773		SEAT,REGULATOR SPRING			
0338-19-773	1				
19-774		PLUG,REGULATOR			
BU55-19-774	1				
19-775		SLEEVE,REGULATOR PLUG			
BU55-19-775	1				
19-777		VALVE,SECOND LOCK			
0338-19-777	1				
19-778		SPRING,SECOND LOCK			
0338-19-778	1				
19-781		PLATE,SIDE'D'			
1758-19-781	1				
19-782		SCREW			
0338-19-782	9				
19-785		VALVE,1-2 SHIFT			
BU55-19-785	1				
19-786		SPRING,1-2 SHIFT			
BU55-19-786	1				

CAT. AUNA03-04 1994-10

1925 CONTROL VALVE (AUTOMATIC)

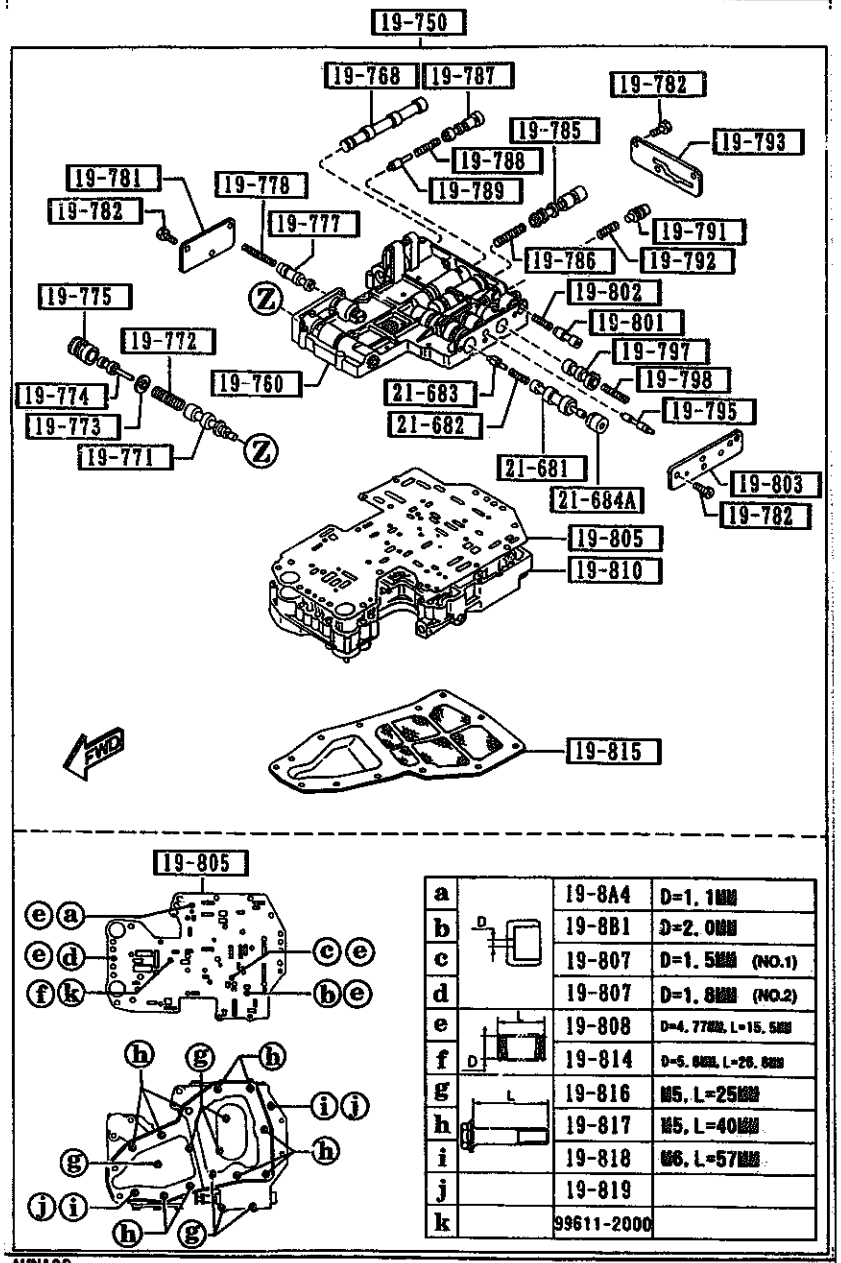

a	D	19-8A4	D=1.1mm
b	D	19-8B1	D=2.0mm
c	D	19-807	D=1.5mm (NO.1)
d	D	19-807	D=1.8mm (NO.2)
e	D	19-808	D=4.77mm, L=15.5mm
f	D	19-814	D=5.6mm, L=26.6mm
g	L	19-816	M5, L=25mm
h	L	19-817	M5, L=40mm
i	L	19-818	M6, L=57mm
j		19-819	
k		99611-2000	

AUNA03

PART NO.	QTY	MODEL/RESTRICTION	MODEL/RESTRICTION	MODEL/RESTRICTION	FROM-TO
19-787 BU55-19-787	1	VALVE,2-3 SHIFT			
19-788 FT21-19-788	1	SPRING,2-3 SHIFT			
19-789 BU17-19-789	1	PLUG,2-3 SHIFT			
19-791 FT27-19-791A	1	VALVE,MODIFIER			
19-792 FT37-19-792	1	SPRING,MODIFIER			
19-793 0338-19-793A	1	PLATE,SIDE'A'			
19-795 0338-19-795B	1	VALVE,THROTTLE			
19-797 0338-19-797	1	VALVE,THROTTLE BACK-UP			
19-798 0338-19-798	1	SPRING,THROTTLE BACK-UP			
19-8A4 BV01-19-8A4	1	VALVE,ORIFICE CHECK			
19-8B1 BV01-19-8B1	1	VALVE,ORIFICE CHECK			
19-801 0338-19-801	1	VALVE,DOWN SHIFT			
19-802 0338-19-802	1	SPRING,DOWN SHIFT			
19-803 BU01-19-803A	1	PLATE,SIDE'B'			

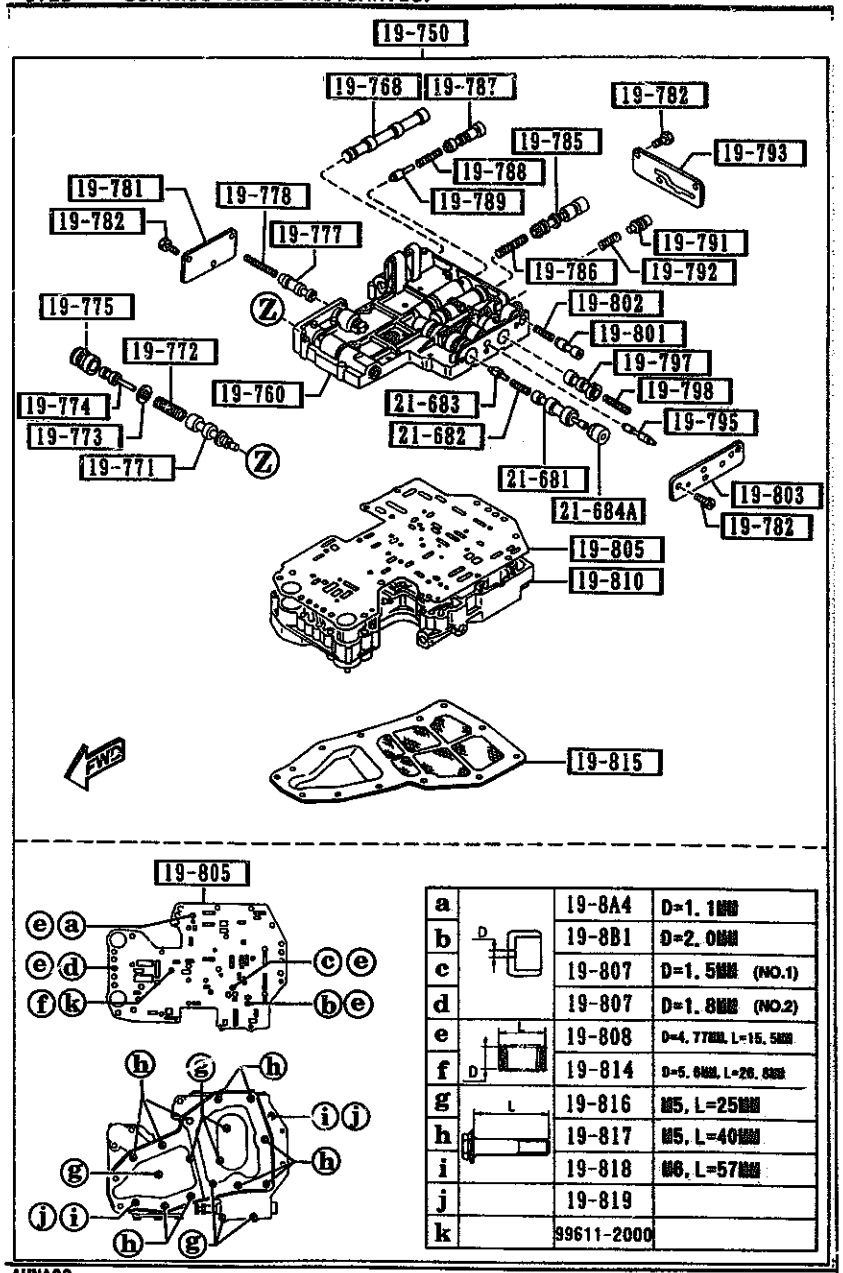

a		19-8A4	D=1.1mm
b		19-8B1	D=2.0mm
c		19-807	D=1.5mm (NO.1)
d		19-807	D=1.8mm (NO.2)
e		19-808	D=4.77mm, L=15.5mm
f		19-814	D=5.6mm, L=26.8mm
g		19-816	M5, L=25mm
h		19-817	M5, L=40mm
i		19-818	M6, L=57mm
j		19-819	
k		99611-2000	

AUNA03

PART NO.	QTY	MODEL/RESTRICTION	MODEL/RESTRICTION	MODEL/RESTRICTION	FROM-TO
19-805		PLATE,SEPARATOR			
BU55-19-805	1				
19-807		VALVE,ORIFICE CHECK			
BU01-19-807	1	(ILLUST. NO.1)			
BU17-19-807	1	(ILLUST. NO.2)			
19-808		SPRING			
0338-19-808	4				
19-810		BODY,LWR-CONT.VALVE			
BU55-19-810	1				
19-814		SPRING			
0338-19-814	1				
19-815		STRAINER,OIL			
BU01-19-815	1				
19-816		SCREW			
0338-19-816	7				
19-817		SCREW			
0338-19-817	10				
19-818		BOLT			
0338-19-818	2				
19-819		NUT			
0338-19-819	2				
21-681		VALVE,SHIFT 3-4			
BU35-21-681A	1				
21-682		SPRING,3-4 SHIFT			
BU35-21-682	1				
21-683		PLUG,3-4 SHIFT			
BU03-21-683A	1				

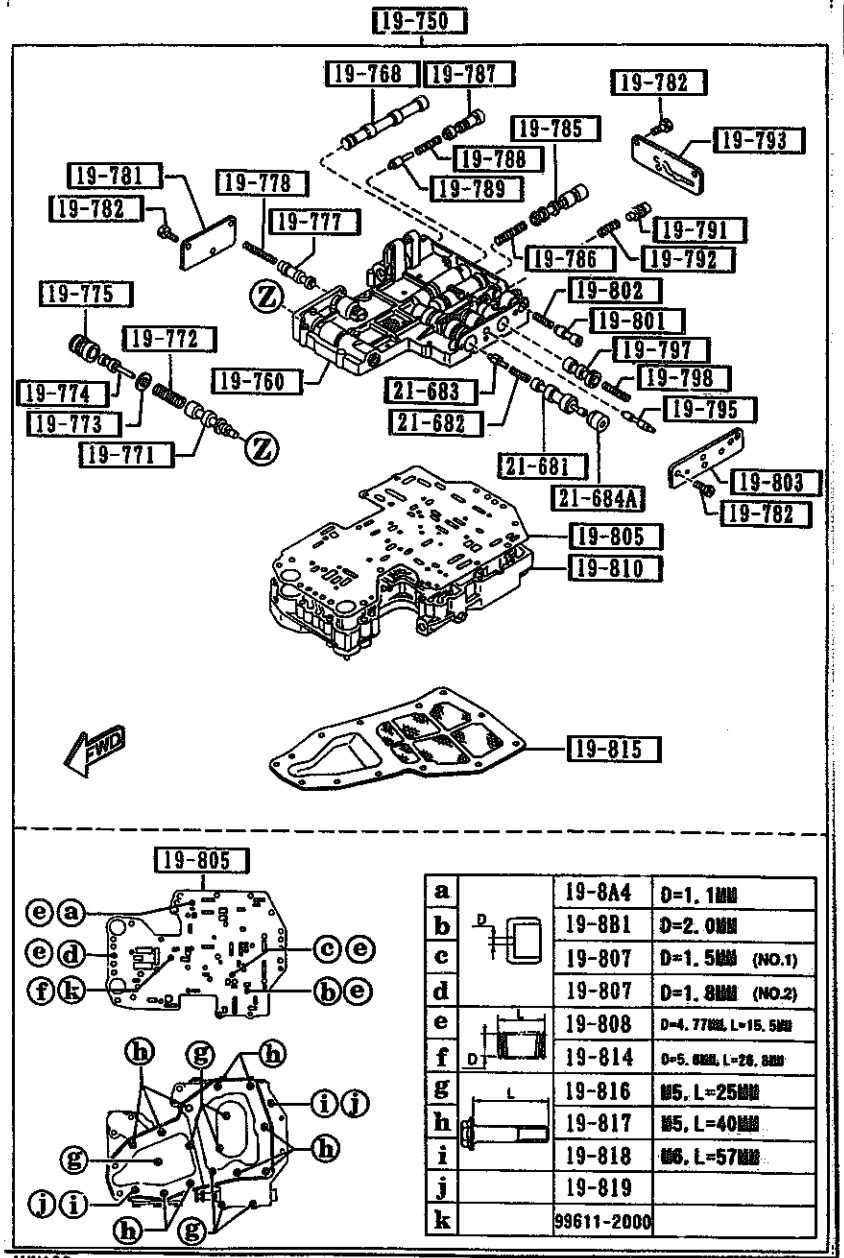

a	D	19-8A4	D=1.1mm
b	D	19-8B1	D=2.0mm
c	D	19-807	D=1.5mm (NO.1)
d	D	19-807	D=1.8mm (NO.2)
e	L, D	19-808	D=4.77mm, L=15.5mm
f	L, D	19-814	D=5.6mm, L=28.8mm
g	L	19-816	M5, L=25mm
h	L	19-817	M5, L=40mm
i	L	19-818	M6, L=57mm
j		19-819	
k		99611-2000	

AUNA03

PART NO.	QTY	MODEL/RESTRICTION	MODEL/RESTRICTION	MODEL/RESTRICTION	FROM-TO
21-684A BU35-21-684	1	SLEEVE,3-4 SHIFT			

CAT. AUNA03-04

1994-10

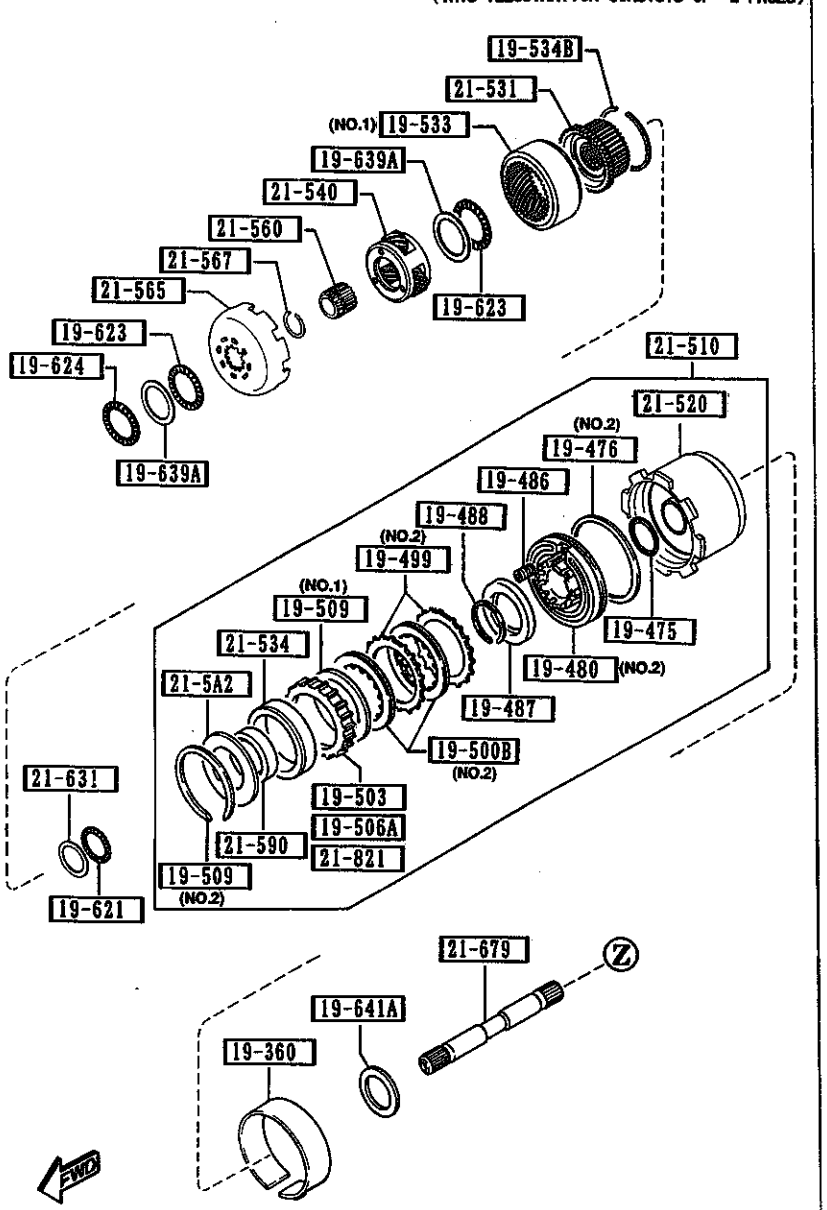
19-534B
21-531
(NO.1) 19-533
19-639A
21-540
21-560
21-567
21-565
19-623
19-624
19-639A
19-623
21-510
21-520
(NO.2) 19-476
19-486
19-488
(NO.2) 19-499
(NO.1) 19-509
21-534
21-5A2
19-503
19-506A
21-590
21-821
19-509 (NO.2)
19-500B (NO.2)
19-487
19-480 (NO.2)
19-475
21-631
19-621
21-679
19-641A
19-360
FWD

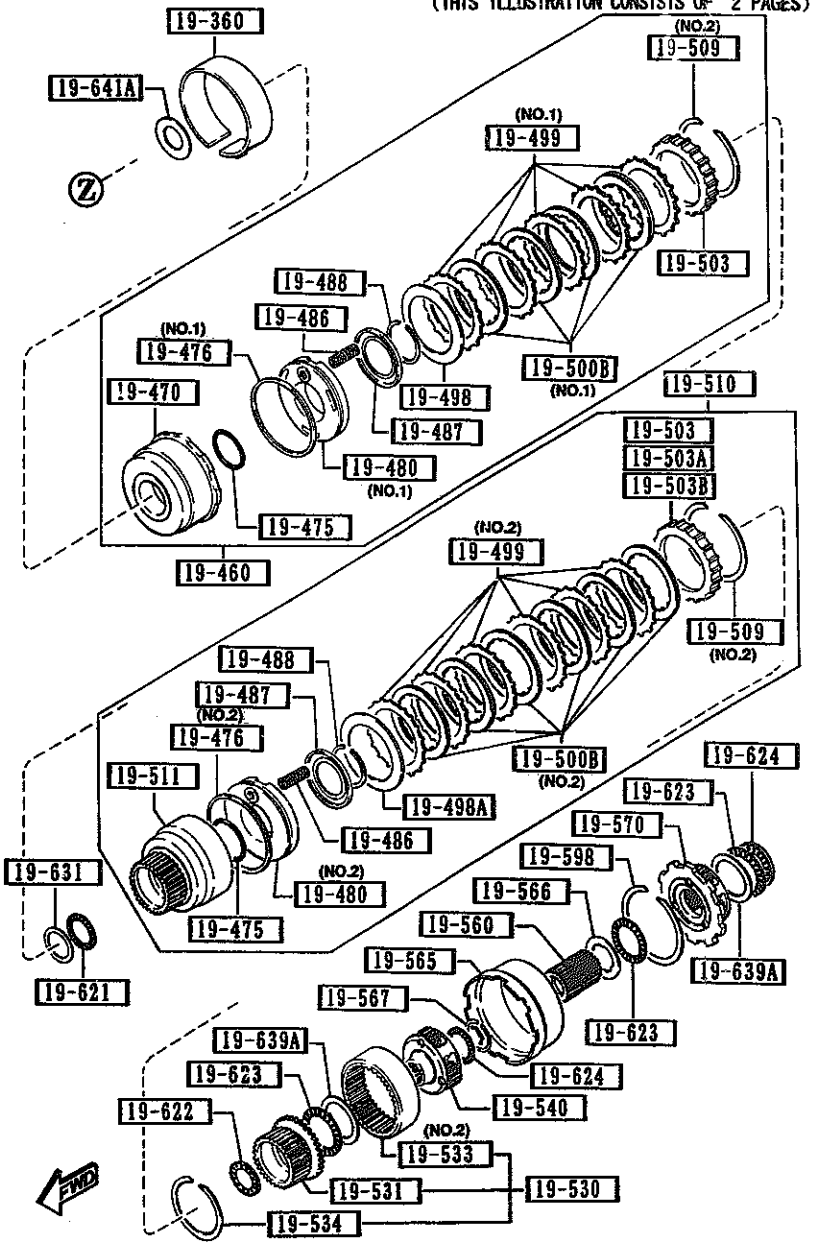
19-360
19-641A
(NO.2) 19-509
(NO.1) 19-499
19-503
19-488
19-486
(NO.1) 19-476
19-470
19-498
19-487
19-480 (NO.1)
19-500B (NO.1)
19-475
19-460
19-510
19-503
19-503A
19-503B
(NO.2) 19-499
19-509 (NO.2)
19-488
19-487 (NO.2)
19-476
19-511
19-498A
19-486
19-480 (NO.2)
19-475
19-500B (NO.2)
19-631
19-621
19-624
19-623
19-570
19-598
19-566
19-560
19-565
19-567
19-623
19-639A
19-639A
19-623
19-624
19-622
19-540
(NO.2) 19-533
19-531
19-530
19-534
FWD

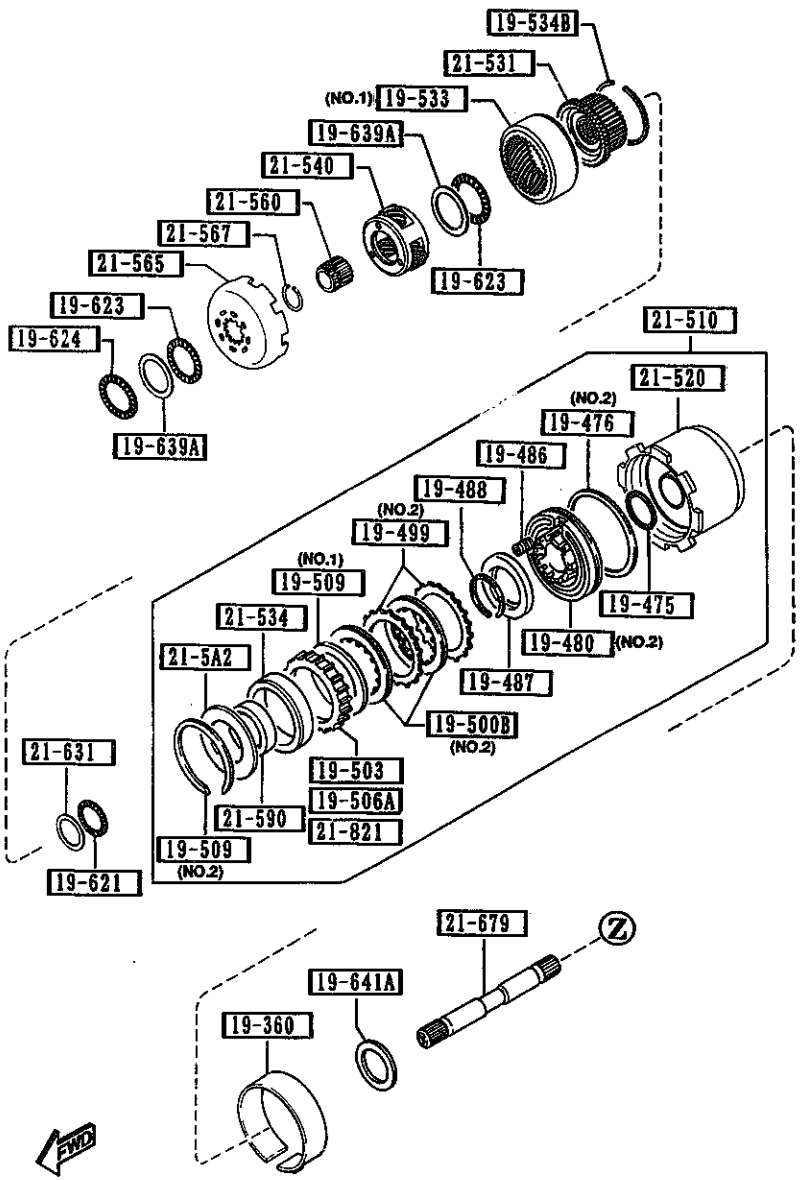

PART NO.	QTY	MODEL/RESTRICTION	MODEL/RESTRICTION	MODEL/RESTRICTION	FROM-TO
19-360		BAND,BRAKE			
0338-19-360B	2				
19-460		CLUTCH,FRONT			
BU55-19-460	1				
19-470		DRUM,CLUTCH			
BU55-19-470	1				
19-475		SEAL,'O'RING			
0338-19-475	3				
19-476		SEAL,LATHE CUT			
BV01-19-476	1	(ILLUST. NO.1)			
0338-19-476	2	(ILLUST. NO.2)			
19-480		PISTON,CLUTCH			
BV01-19-480	1	(ILLUST. NO.1)			
0338-19-480	2	(ILLUST. NO.2)			
19-486		SPRING,PISTON RETURN			
0338-19-486	28				
19-487		RETAINER,SPRING			
0338-19-487	3				
19-488		RING,SNAP			
0338-19-488	3				
19-498		PLATE,DISHED			
0338-19-498	1				
19-498A		PLATE,DISHED			
BU17-19-498	1				
19-499		PLATE,DRIVEN			
BU55-19-499	5	(ILLUST. NO.1)			
FT01-19-499	8	(ILLUST. NO.2)			
19-500B		PLATE,DRIVEN			

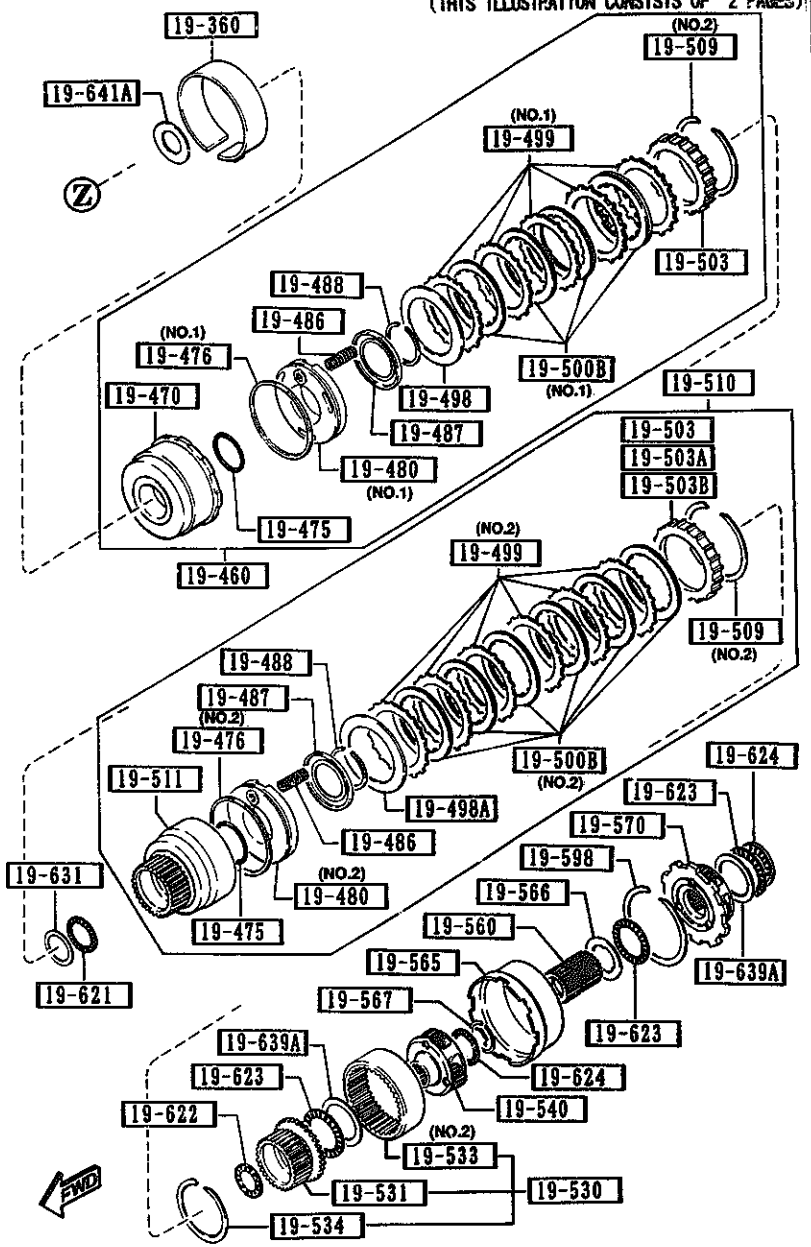

AUNA03

1930 -2 CLUTCHES & PLANETARY GEARS (AUTOMATIC)

PART NO.	QTY	MODEL/RESTRICTION	MODEL/RESTRICTION	MODEL/RESTRICTION	FROM-TO
CONT'D					
BU55-19-5J0	4	(ILLUST. NO.1)			
BU17-19-500A	8	(ILLUST. NO.2)			
19-503		PLATE,RETAINING			
3959-19-503	1	T=5MM			
3959-19-504	1	T=5.2MM			
3959-19-505	1	T=5.4MM			
3959-19-506	2	T=5.6MM			
3959-19-507	2	T=5.8MM			
3959-19-508	2	T=6MM			
3959-19-509	3	T=6.2MM			
19-503A		PLATE,RETAINING			
1758-19-503	1	T=7.2MM			
1758-19-504	1	T=7.4MM			
1758-19-505	1	T=7.6MM			
19-503B		PLATE,RETAINING			
BV02-19-506	1	T=6.6MM			
BV02-19-507	1	T=6.8MM			
BV02-19-508	1	T=7MM			
19-506A		PLATE,RETAINING			
BU05-21-525	1	T=6.4MM			
BU05-21-528	1	T=7MM			
19-509		RING,SNAP			
BV01-19-509	1	(ILLUST. NO.1)			
0338-19-509	3	(ILLUST. NO.2)			

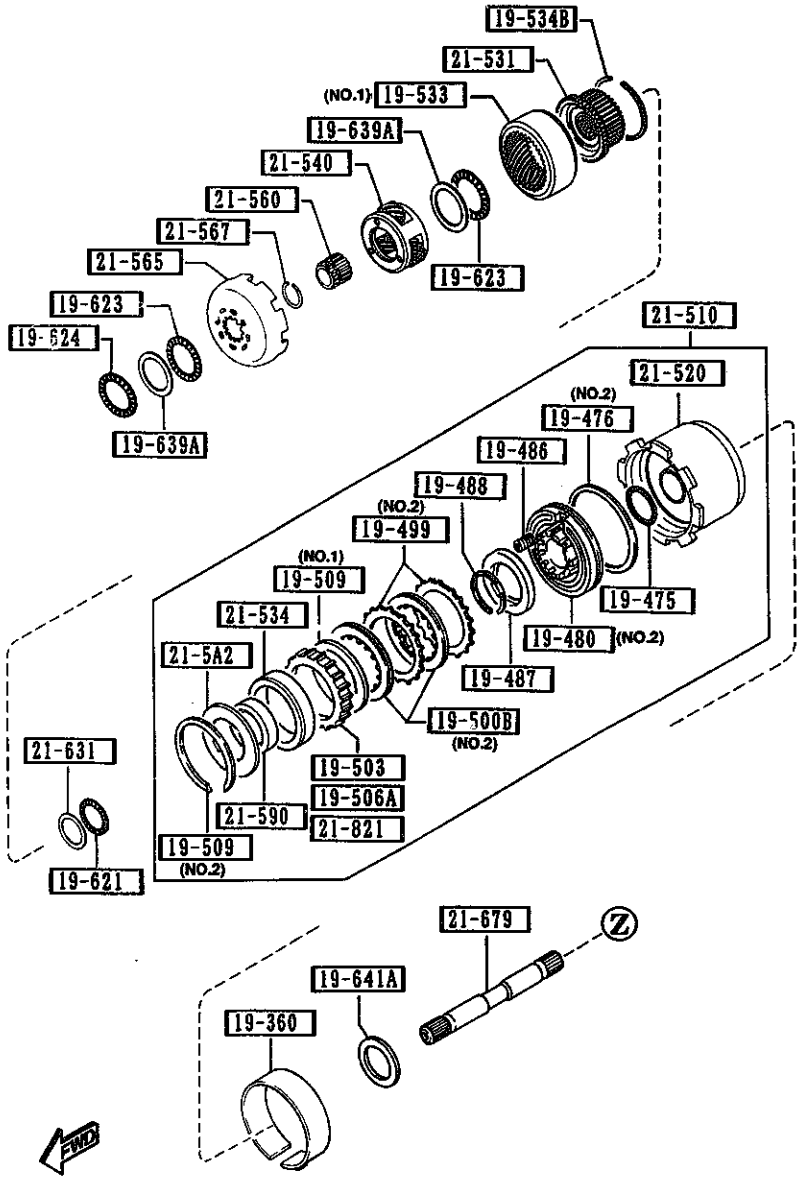

PART NO.	QTY	MODEL/RESTRICTION	MODEL/RESTRICTION	MODEL/RESTRICTION	FROM-TO
19-510		CLUTCH,REAR			
BV01-19-510A	1				
19-511		DRUM,REAR CLUTCH			
1758-19-511A	1				
19-530		HUB,REAR CLUTCH			
BV04-19-530	1				
19-531		HUB,REAR CLUTCH			
BV04-19-531	1				
19-533		GEAR,INTERNAL			
BV01-19-533	1	(ILLUST. NO.1)			
BV04-19-533	1	(ILLUST. NO.2)			
19-534		RING,SNAP			
0338-19-53[illegible]	1				
19-534B		RING,SNAP			
BU03-19-534	1				
19-540		CARRIER,FRONT			
BV01-19-540A	1				
19-560		GEAR,SUN			
BV04-19-560	1				
19-565		SHELL,CONNECTING			
BV04-19-565	1				
19-566		RACE,SHELL BEARING			
BV04-19-566	1				
19-567		RING,SNAP			
BU02-19-567	1				
19-570		CARRIER,REAR			
BV01-19-570A	1				

1930 CLUTCHES & PLANETARY GEARS (AUTOMATIC) (2/2)

(THIS ILLUSTRATION CONSISTS OF 2 PAGES)

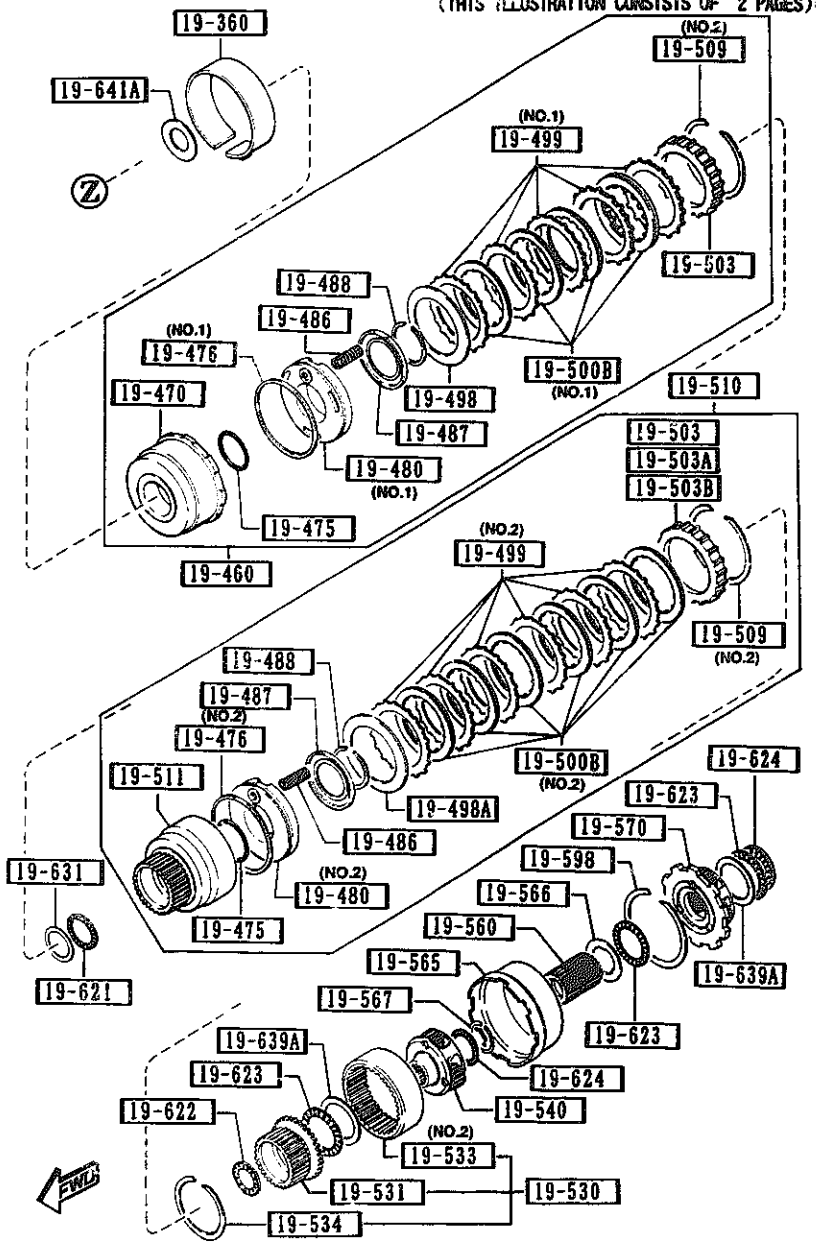

AUNA03

PART NO.	QTY	MODEL/RESTRICTION	MODEL/RESTRICTION	MODEL/RESTRICTION	FROM-TO
19-598		RING,SNAP			
0338-19-598	1				
19-621		BEARING,NEEDLE			
0338-19-621	2				
19-622		BEARING,NEEDLE			
FT01-19-622	1	D=33.8MM			
19-623		BEARING,NEEDLE			
0338-19-623A	5				
19-624		BEARING,NEEDLE			
0338-19-624	3				
19-631		RACE,BRG.PUMP COVER			
0338-19-631	1	T=1.2MM			
0338-19-632	1	T=1.4MM			
0338-19-633	1	T=1.6MM			
0338-19-634	1	T=1.8MM			
0338-19-635	1	T=2MM			
0338-19-636	1	T=2.2MM			
19-639A		RACE,BEARING			
0338-19-639	4				
19-641A		WASHER			
0338-19-641	2	T=1.9MM			
0338-19-642	2	T=2.1MM			
0338-19-643	2	T=2.3MM			
0338-19-644	2	T=2.5MM			
0338-19-645	2	T=2.7MM			

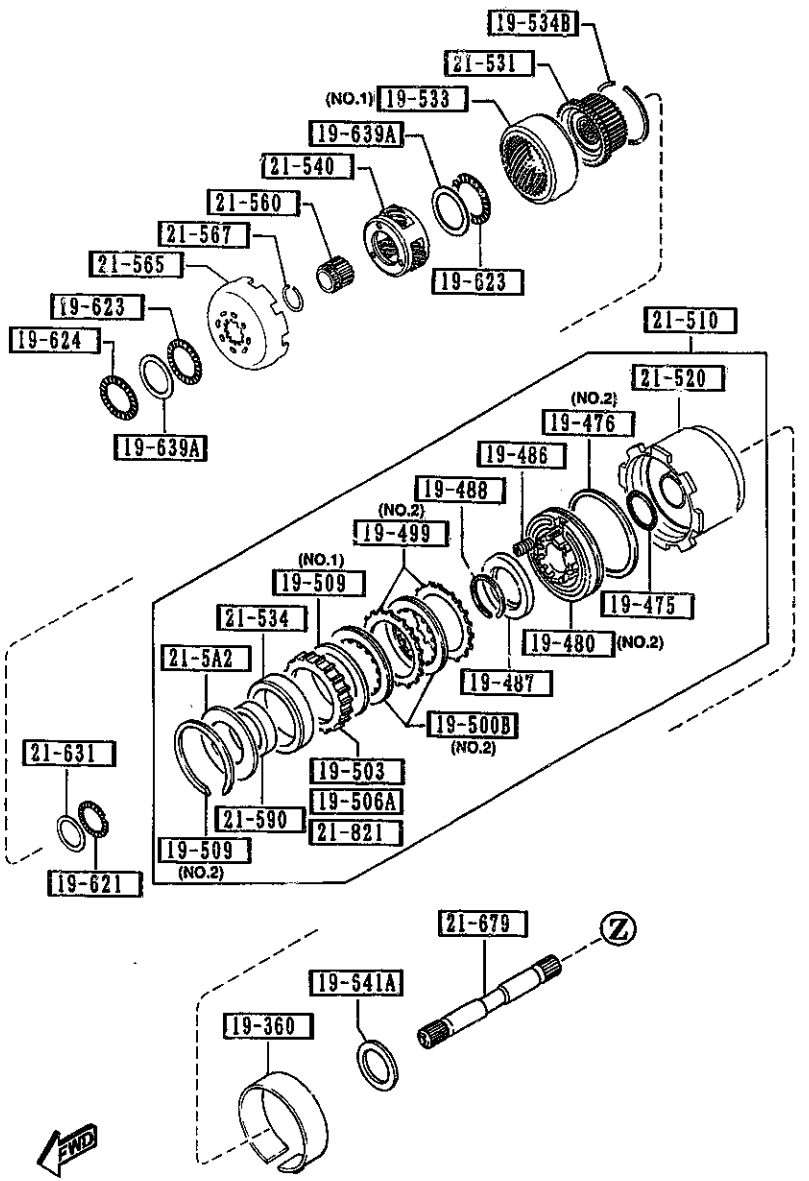

AUNA03 (CONT'D)

PART NO.	QTY	MODEL/RESTRICTION	MODEL/RESTRICTION	MODEL/RESTRICTION	FROM-TO
CONT'D					
0338-19-646	2	T=1.5MM			
0338-19-647	2	T=1.7MM			
0338-19-648	2	T=1.3MM			
21-5A2		RACE,SIDE-ONE WAY CLUTCH			
BV01-21-5A2	1	T=0.6MM			
BV01-21-5A3	1	T=0.8MM			
BV01-21-5A4	1	T=1MM			
BV01-21-5A5	1	T=1.2MM			
BV01-21-535	1	T=0.4MM			
21-510		CLUTCH,DIRECT			
BU55-21-510	1				
21-520		DRUM,DIRECT			
BU55-21-5A0	1				
21-531		HUB,O/DRIVE CLUTCH			
BV01-21-536	1				
21-534		RACE,OUTER-ONE WAY CLUTCH			
BV01-21-534	1				
21-540		CARRIER,OVER DRIVE			
BU03-21-540	1				
21-560		GEAR,OVER DRIVE			
BU03-21-560	1				
21-565		CONNECTING,SHELL			
BU03-21-565	1				
21-567		RING,SNAP			
BU03-21-567	1				

1930 CLUTCHES & PLANETARY GEARS (AUTOMATIC) (2/2)

(THIS ILLUSTRATION CONSISTS OF 2 PAGES)

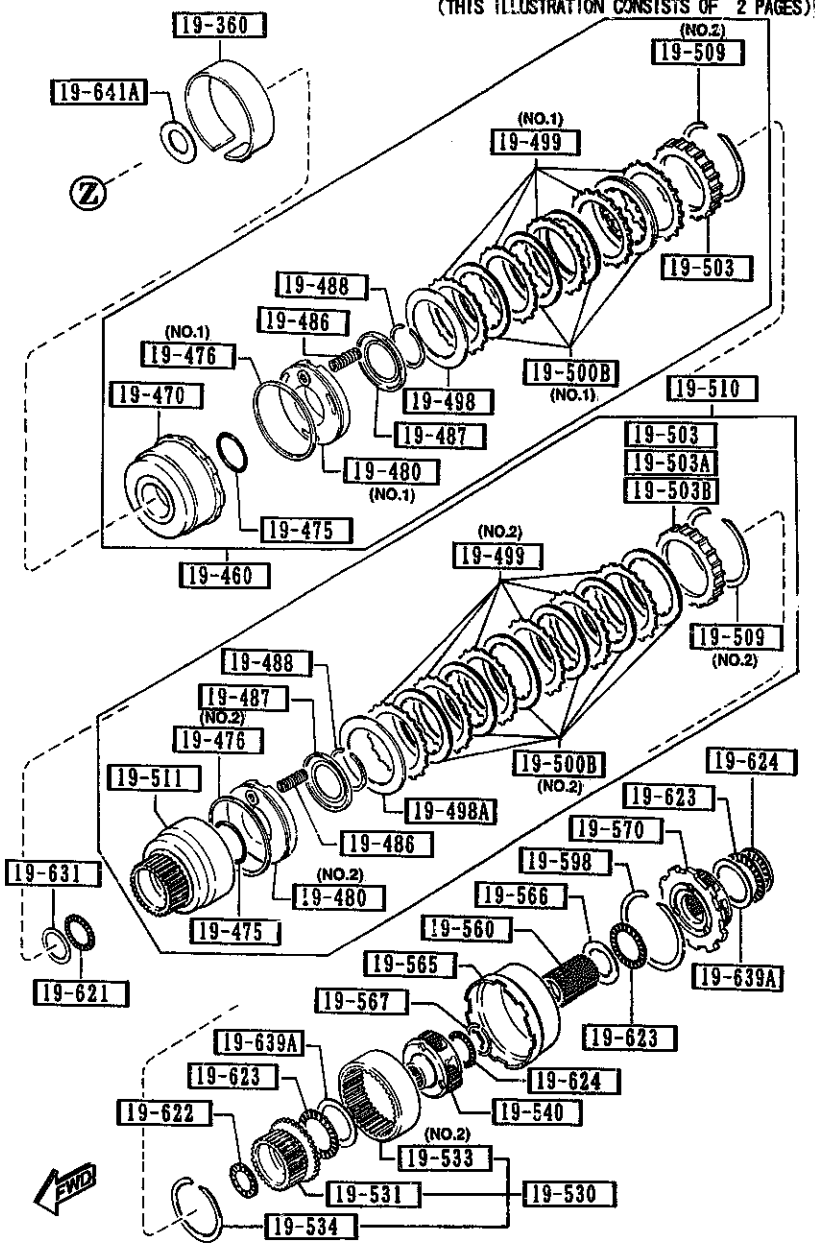

PART NO.	QTY	MODEL/RESTRICTION	MODEL/RESTRICTION	MODEL/RESTRICTION	FROM-TO
21-590		CLUTCH,ONE WAY			
BV01-21-533	1				
21-631		RACE,BRG.HUB CLUTCH			
BU01-21-631	1	L=1.2MM			
BU01-21-632	1	L=1.4MM			
BU01-21-633	1	L=1.6MM			
BU01-21-634	1	L=1.8MM			
BU01-21-635	1	L=2MM			
BU01-21-636	1	L=2.2MM			
21-679		SHAFT,INTERMEDIATE			
BU01-21-679	1				
21-821		PLATE,RETAINING			
BV01-21-821A	1				

1940 GOVERNOR, LOW & REVERSE PISTON (AUTOMATIC)

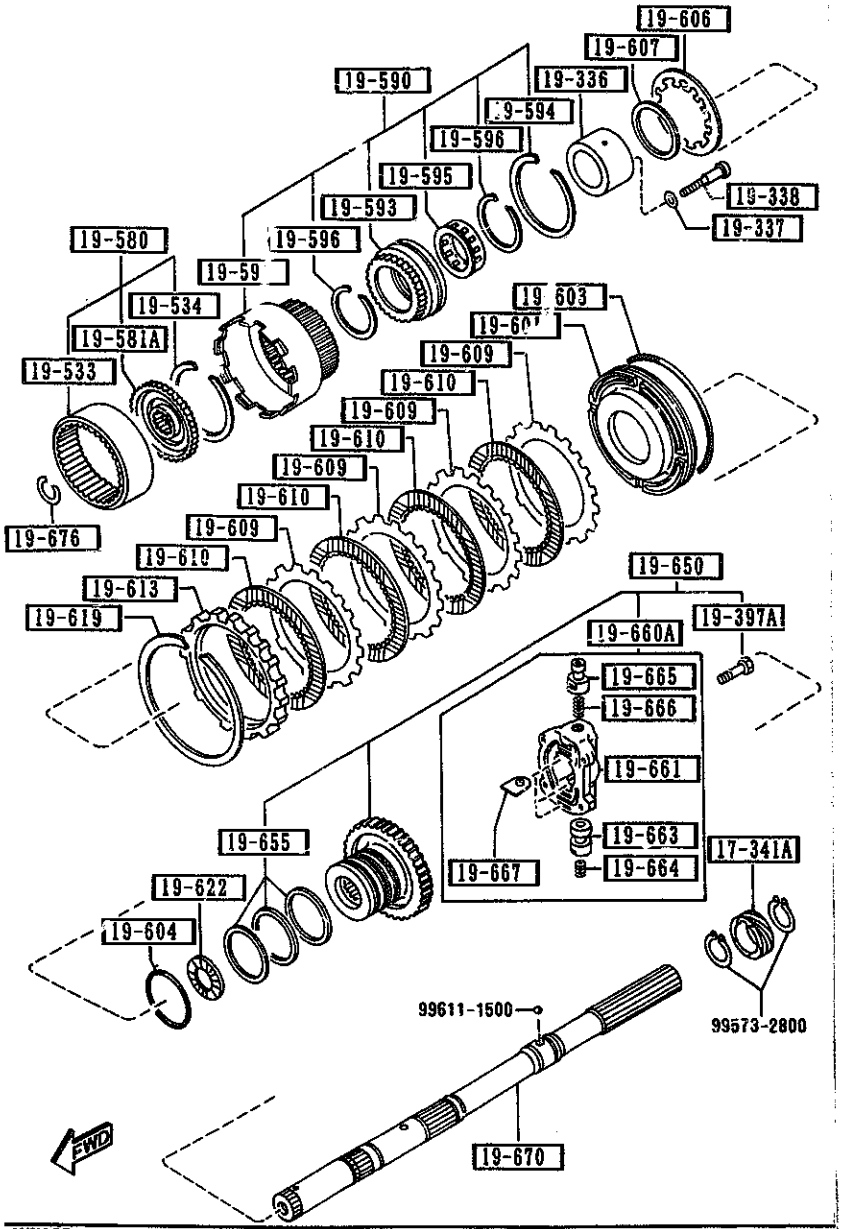

AUNA03

1940 -1 GOVERNOR, LOW & REVERSE PISTON (AUTOMATIC)

PART NO.	QTY	MODEL/RESTRICTION	MODEL/RESTRICTION	MODEL/RESTRICTION	FROM-TO
17-341A 1281-17-341	1	GEAR,SPEEDO.DRIVE			
19-336 0338-19-336	1	RACE,INNER			
19-337 0338-19-337	8	WASHER,PLAIN			
19-338 0338-19-338	8	BOLT			
19-397A 0338-19-397	4	BOLT			
19-533 BV04-19-533	1	GEAR,INTERNAL			
19-534 0338-19-534	1	RING,SNAP			
19-580 BV01-19-5K0	1	FLANGE			
19-581A BV04-19-581	1	HUB,DRIVE			
19-590 0338-19-590	1	DRUM,CONNECTING			
19-591 0338-19-591	1	DRUM,CONNECTING			
19-593 0338-19-593	1	RACE,OUTER			
19-594 0338-19-594	1	RING,SNAP			
19-595 0338-19-595	1	CLUTCH,ONE WAY			

CAT. AUNA03-04

1994-10

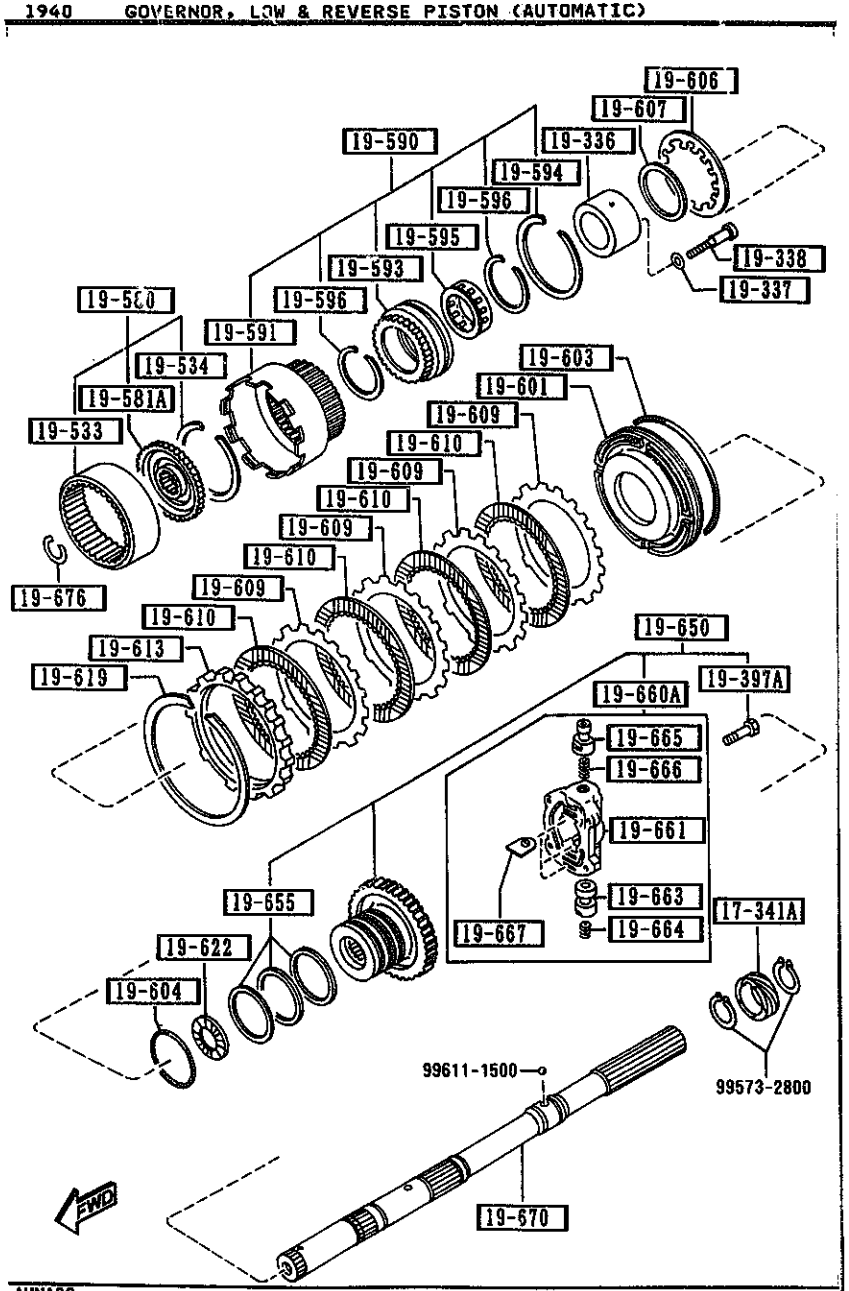

AUNA03

PART NO.	QTY	MODEL/RESTRICTION	MODEL/RESTRICTION	MODEL/RESTRICTION	FROM-TO
19-596		RING,SNAP			
0338-19-596	2				
19-601		PISTON,LOW & REVERSE			
BT08-19-600	1				
19-603		SEAL,PISTON			
0338-19-603	1				
19-604		SEAL,'O'RING			
0338-19-604	1				
19-606		SPRING,PISTON			
0338-19-606	1				
19-607		RING,SNAP			
0338-19-607	1				
19-609		PLATE,DRIVEN			
0338-19-609	4				
19-610		PLATE,DRIVEN			
BU17-19-610	4				
19-613		PLATE,RETAINING			
1758-19-613	1	T=7.8MM			
1758-19-614	1	T=8MM			
1758-19-615	1	T=8.2MM			
1758-19-616	1	T=8.4MM			
1758-19-617	1	T=8.6MM			
1758-19-618	1	T=8.8MM			
19-619		RING,SNAP			
0338-19-619	1				
19-622		BEARING,NEEDLE			

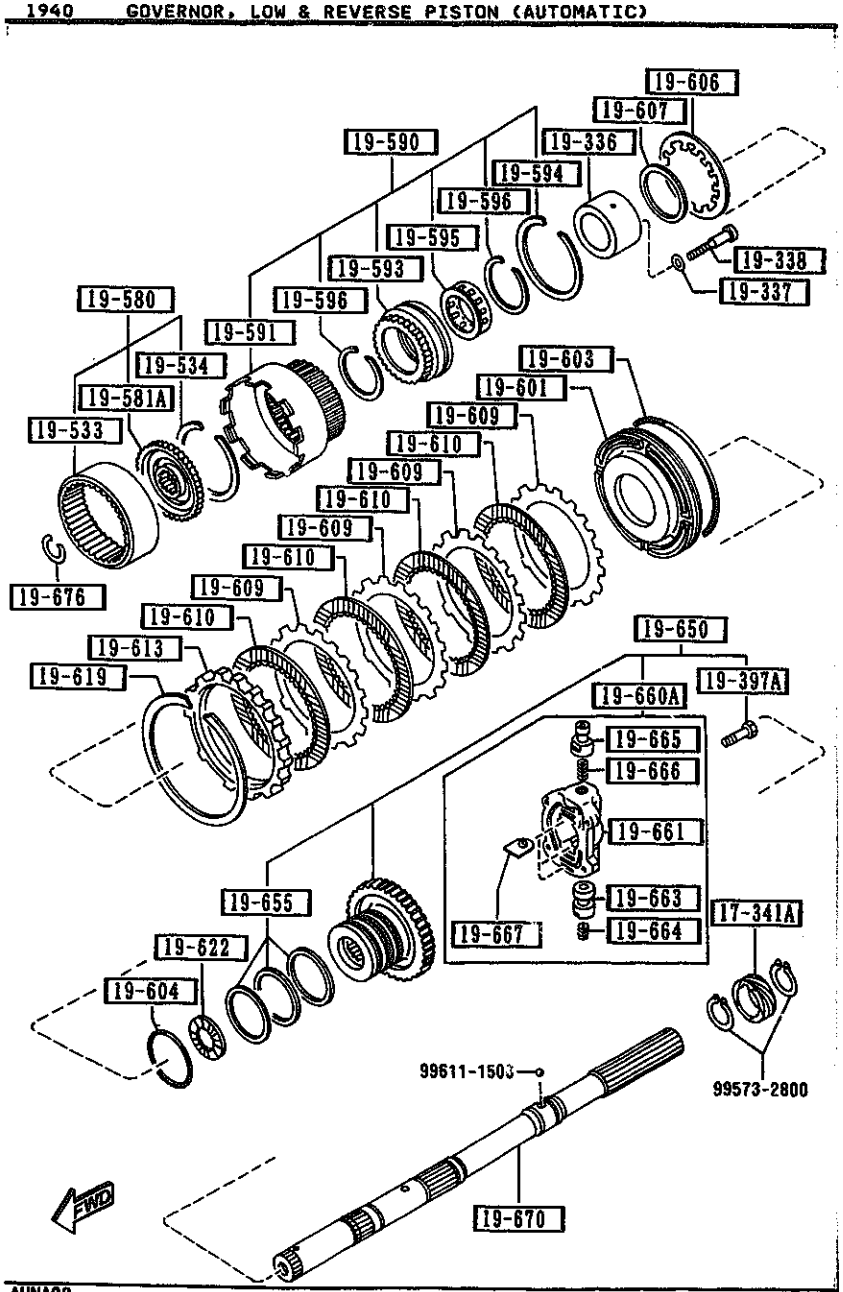

AUNA03

1940 -3 * GOVERNOR, LOW & REVERSE PISTON (AUTOMATIC)

PART NO.	QTY	MODEL/RESTRICTION	MODEL/RESTRICTION	MODEL/RESTRICTION	FROM-TO
CONT'D FT01-19-622	1	D=33.8MM			
19-650 BU55-19-650	1	DISTRIBUTOR,OIL			
19-655 0338-19-655	3	RING,SEAL			
19-660A BU55-19-660	1	VALVE,GOVERNOR			
19-661 BU55-19-661	1	BODY			
19-663 0338-19-663	1	VALVE			
19-664 0338-19-664	1	SPRING			
19-665 BU55-19-665	1	VALVE			
19-666 BU55-19-666	1	SPRING,GOVERNOR			
19-667 0338-19-667	3	PLATE,RETAINER			
19-670 BU55-19-670	1	SHAFT			
19-676 0338-19-676	1	RING			

CAT. AUNA03-04

1994-10

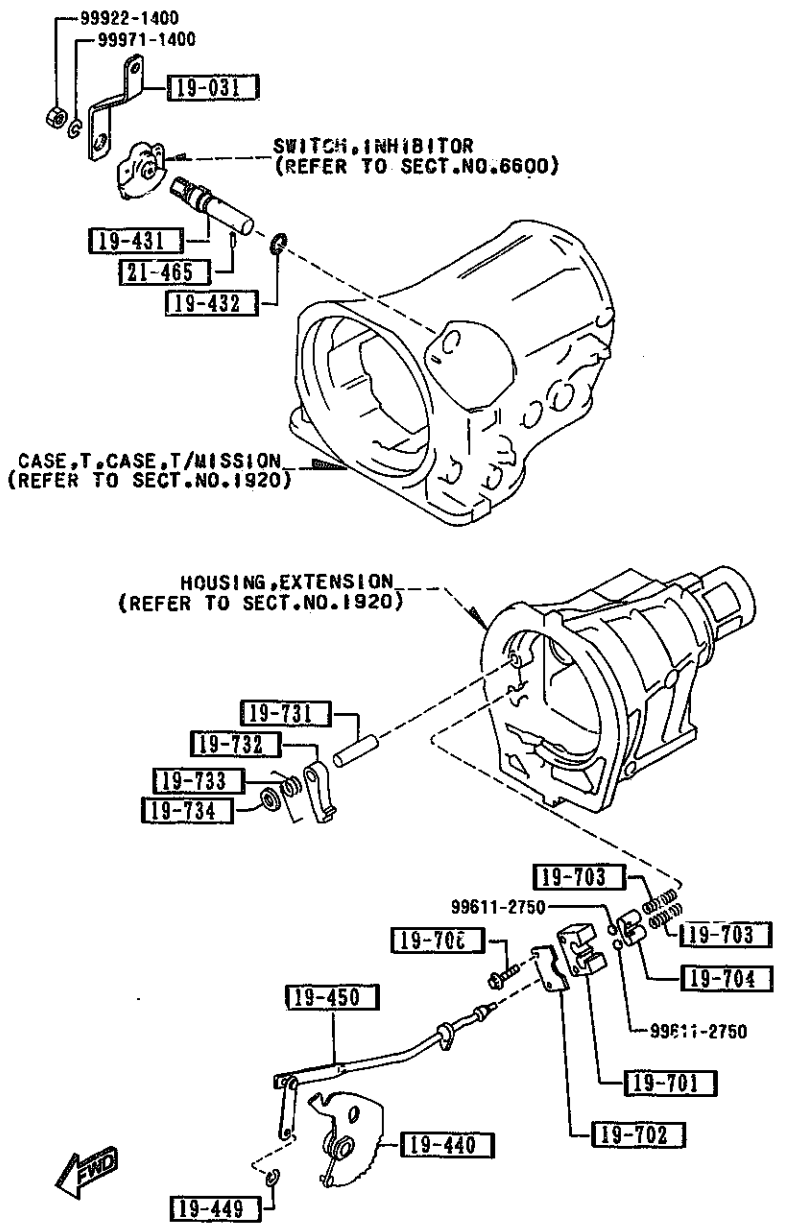

AUNA03

PART NO.	QTY	MODEL/RESTRICTION	MODEL/RESTRICTION	MODEL/RESTRICTION	FROM-TO
19-031		LEVER,SELECT			
BU55-19-031	1				
19-431		SHAFT,MANUAL			
BU67-19-431	1				
19-432		RING,'O'			
0338-19-432	1				
19-440		PLATE,MANUAL			
BU36-19-440	1				
19-449		RING,SNAP			
0338-19-449	1				
19-450		ROD,PARKING			
BU17-19-450	1				
19-701		SUPPORTER,ACTUATOR			
BU17-19-701	1				
19-702		PLATE,RETAINING			
0338-19-702A	1				
19-703		SPRING,BALL PARK			
BU17-19-703	2				
19-704		RETAINER			
BU17-19-704	1				
19-706		BOLT			
0338-19-706	1				
19-731		SHAFT,PARKING PAWL			
0338-19-731	1				
19-732		PAWL,PARKING			
BU17-19-732	1				
19-733		SPRING,PAWL RETURN			
0338-19-733C	1				

1950 MANUAL LINKAGE SYSTEM (AUTOMATIC)

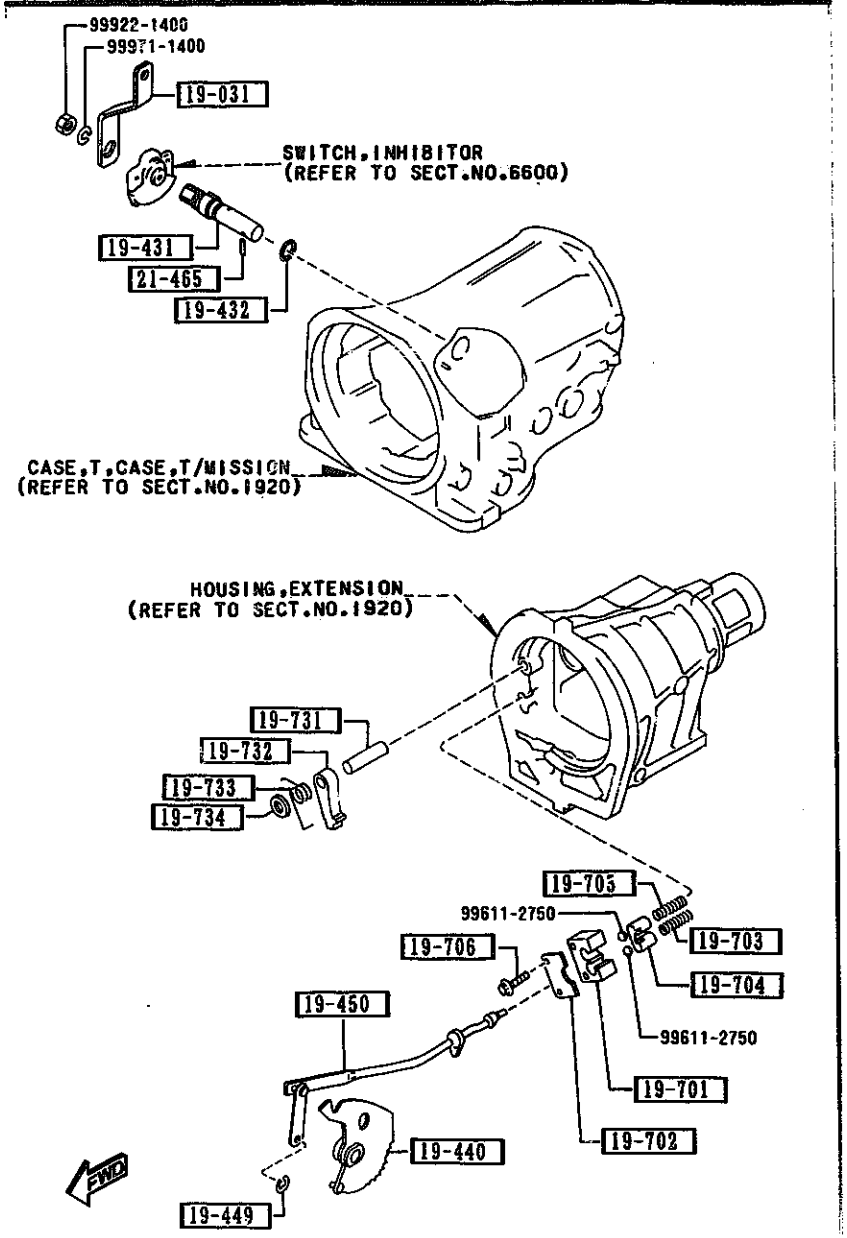

AUNA03

PART NO.	QTY	MODEL/RESTRICTION	MODEL/RESTRICTION	MODEL/RESTRICTION	FROM-TO
19-734		SPACER,DOWEL			
0338-19-734A	1				
21-465		PIN,SPRING-PARKING ROD			
BU67-21-465	1				

22-900

1-SEAL, OIL ..... (1)
2-GASKET, OIL PUMP ..... (1)
3-SEAL, OIL ..... (1)
4-SEAL, CUT RING ..... (2)
5-SEAL, PISTON ..... (1)
6-SEAL, LATHE CUT ..... (1)
8-RING, "O" ..... (1)
9-RING, "O" ..... (1)
10-RING, "O" ..... (1)
11-SEAL, "O" RING ..... (3)
12-SEAL, LATHE CUT ..... (3)
13-SEAL, PISTON ..... (1)
14-SEAL, "O" RING ..... (1)
15-GASKET, EXTENTION ..... (1)
16-SEAL, "O" RING ..... (2)
17-GASKET, OIL PAN ..... (1)
18-RING, "O" ..... (1)
19-GASKET, DRUM SUPPORT ..... (1)
20-SEAL, "O" RING ..... (1)
21-RING, "O" ..... (1)
22-RING, "O" ..... (1)
23-RING, "O" ..... (1)
24-RING, "O" ..... (1)
25-GASKET, O/DRIVE CASE ..... (1)
26-RING, "O" ..... (1)
27-RING, "O" ..... (1)

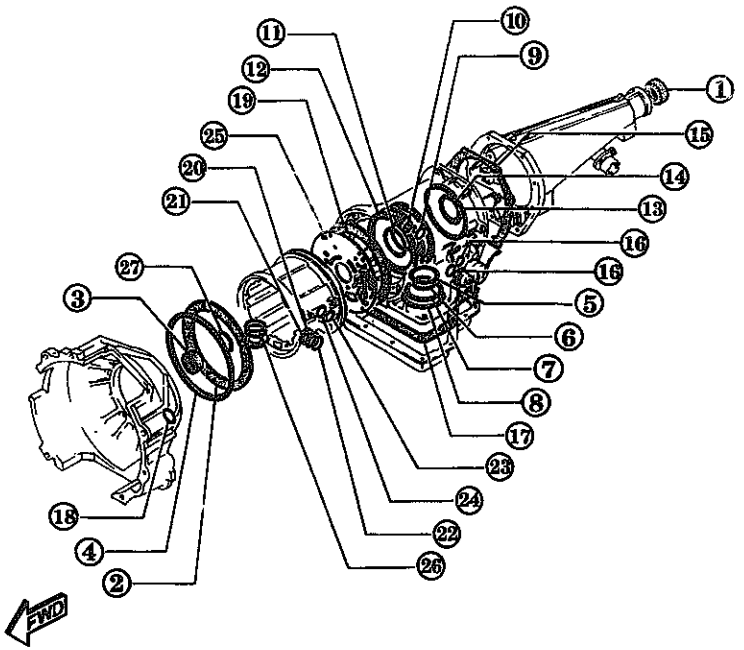

AUNA03

PART NO.	QTY	MODEL/RESTRICTION	MODEL/RESTRICTION	MODEL/RESTRICTION	FROM-TO
22-900		GASKET & SEAL KIT			
BU01-99-190A		ASBESTOS			
A (BU74-22-900)	1				-2C07
BU74-22-900	1				2C07-

2C07 NA351*-407852