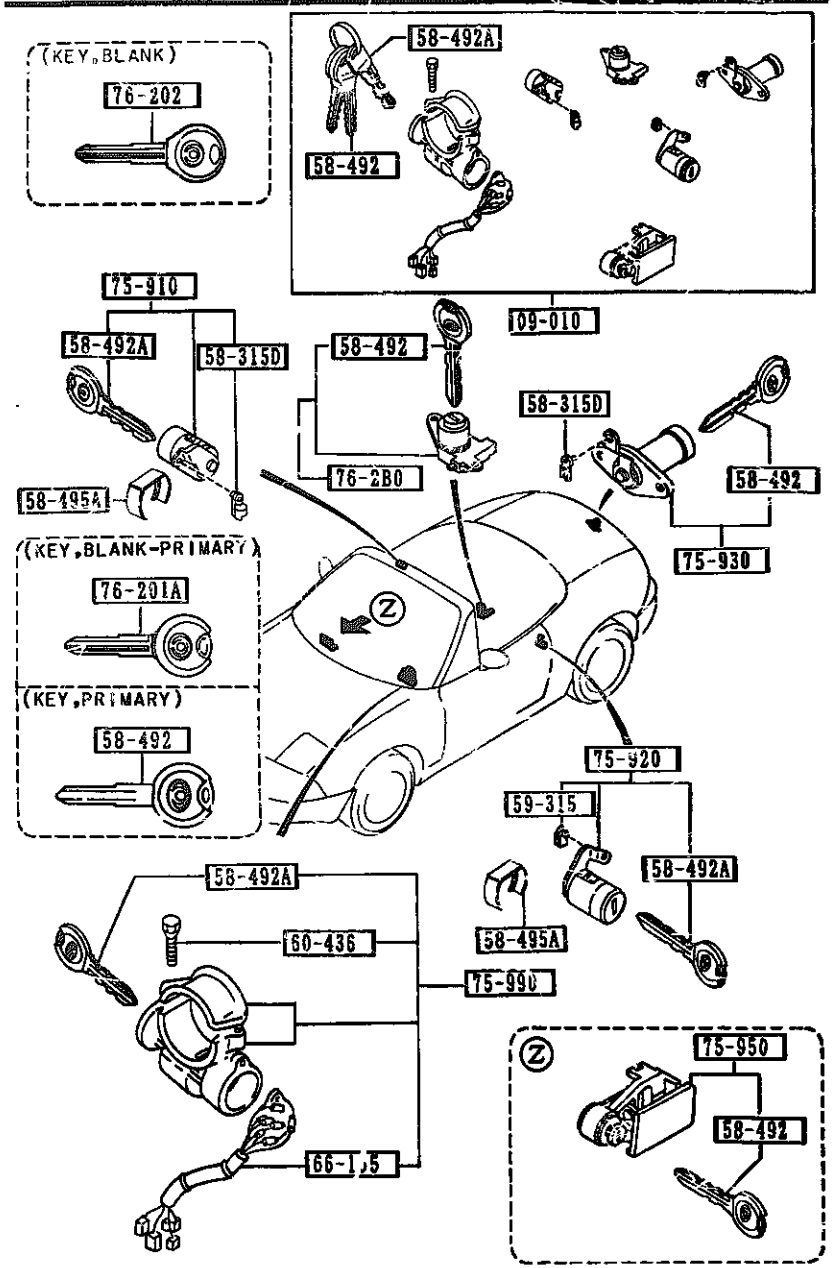

PART NO	QTY	MODEL/RESTRICTION	MODEL/RESTRICTION	MODEL/RESTRICTION	FROM TO
09-010		KEY SET			
NA01-09-010F	1	(MT)			
00	INT-	NA0 BLACK			
17	INT-	NA2 RED/BLACK			
88	INT-	NA1 TAN/BLACK			
NA03-09-010D	1	(AT)			-3401
00	INT-	NA0 BLACK			
17	INT-	NA2 RED/BLACK			
88	INT-	NA1 TAN/BLACK			
NA81-09-010B	1	(AT)			3401-
00	INT-	NA0 BLACK			
17	INT-	NA2 RED			
88	INT-	NA1 TAN			
58-315D		CLIP (R)			
G030-58-315	2				
58-492		KEY,PRIMARY			
FD01-58-492	2	KEY NO.IS REQUIRED			
58-492A		KEY,SECONDARY			
FD01-58-493	1	KEY NO.IS REQUIRED			
58-495A		RETAINER,LOCK CYL.			
G211-58-495	2				
59-315		CLIP			
G030-59-315	1				
60-436		BOLT,SET			
H043-66-154	2				
66-155		SWITCH,IGNITION			
D001-66-151	1				
75-910		KEY SUB SET(R),DOOR			
NA14-76-210F	1				

3401 NA351X-418700

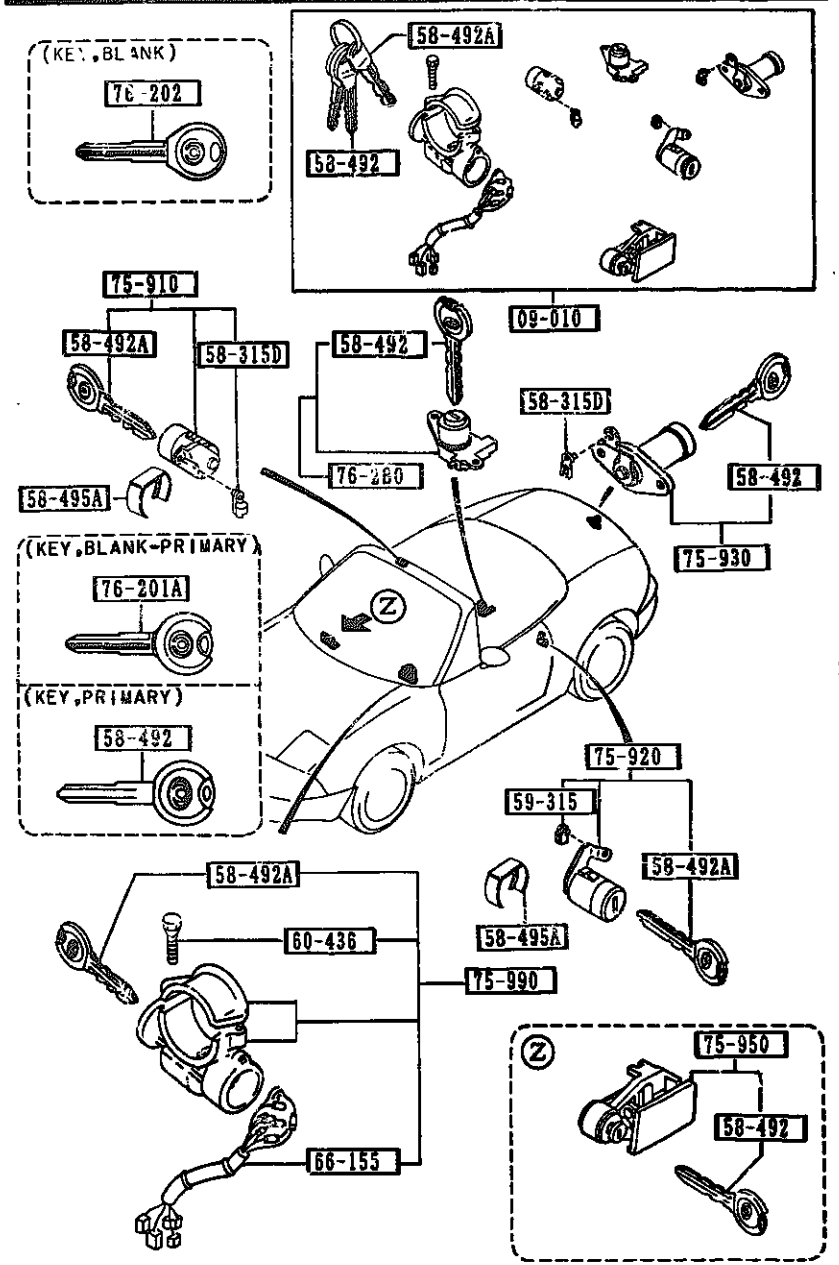

AUNA03

PART NO.	QTY	MODEL/RESTRICTION	MODEL/RESTRICTION	MODEL/RESTRICTION	FROM-TO
75-920		KEY SUB SET(L),DOOR			
NA14-76-220F	1				
75-930		KEY SUB SET,TRUNK			
NA01-76-230C	1				
75-950		KEY SUB SET,GLOVE			
NA01-76-250C	1				
00	INT-	NA0 BLACK			
17	INT-	NA2 RED			
88	INT-	NA1 TAN			
75-990		KEY SUB SET,ST.LOCK			
NA01-76-290C	1	(MT)			
NA01-76-290	1	(AT)			
76-280		KEY SUB SET,CONSOLE			
NA01-76-280C	1				
00	INT-	NA0 NA1 NA2 BLACK			
76-201A		KEY,BLANK-PRIMARY			
FD01-76-201	1				
76-202		KEY,BLANK-SECONDARY			
FD01-76-202	1				

CAT. AUNA03-04

1994-10

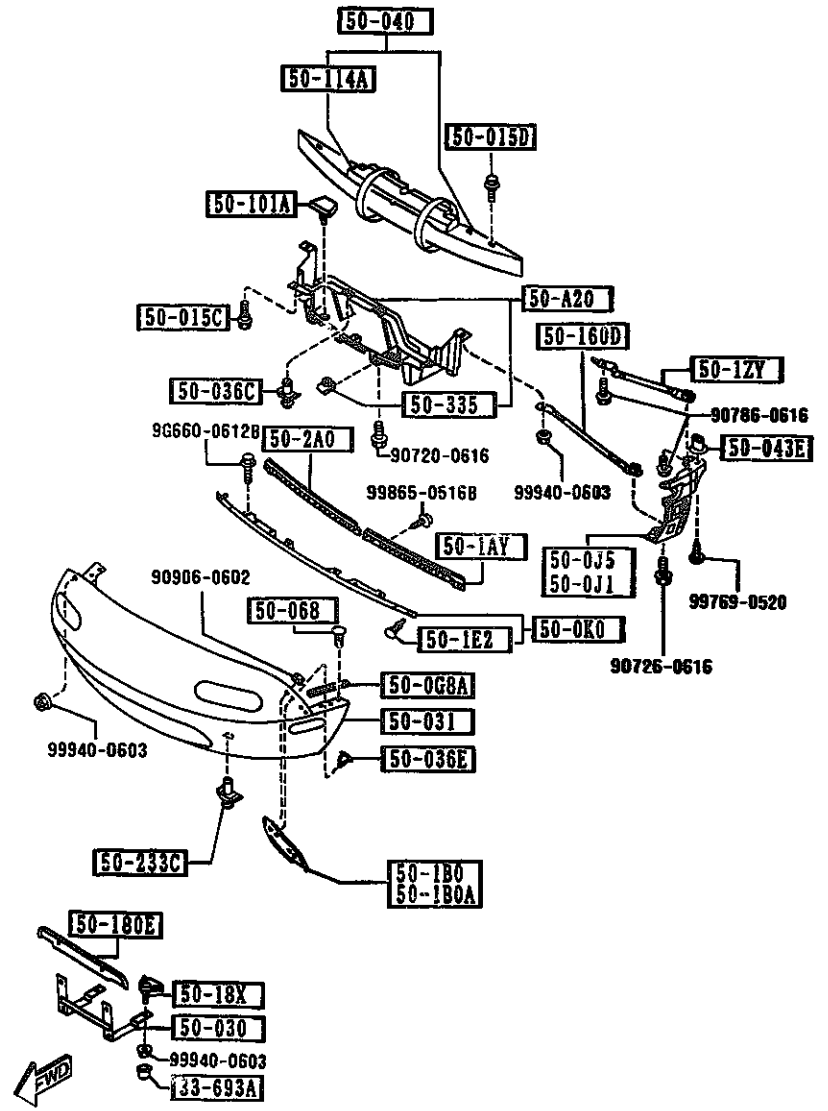

AUNA03

PART NO.	QTY	MODEL/RESTRICTION	MODEL/RESTRICTION	MODEL/RESTRICTION	FROM-TO
33-693A 0259-33-693	2	CAP,BLEEDER SCREW			
50-A20 NA01-50-A20A	1	GUIDE,AIR (W/O A.LOCK BRAKE)			
NA23-50-A20	1	(A.LOCK BRAKE)			
50-0G8A NA01-50-0G9	2	SEAL,RUBBER-FRONT BUMPER			
50-0J1 NA01-50-0J1	1	RETAINER(R),FRONT BUMPER			
50-0J5 NA01-50-0J5	1	RETAINER(L),FRONT BUMPER			
50-0K0 NA01-50-0K0B	1	RETAINER,FASCIA			
50-015C FB01-50-132	2	BOLT			
50-015D NA01-50-0Z2	8	BOLT			
50-030 NA01-50-180A	1	HOLDER,NO. PLATE			
50-031 NAY1-50-030	1	BUMPER,FRONT PAINT TO MATCH			
50-036C BF67-50-033	2	FASTENER			
50-036E KA01-50-1G2	6	CLIP			
50-040 NA01-50-070	1	REINFORCEMENT,BUMPER (W/O DAY TIME RUNNING LAMP)			

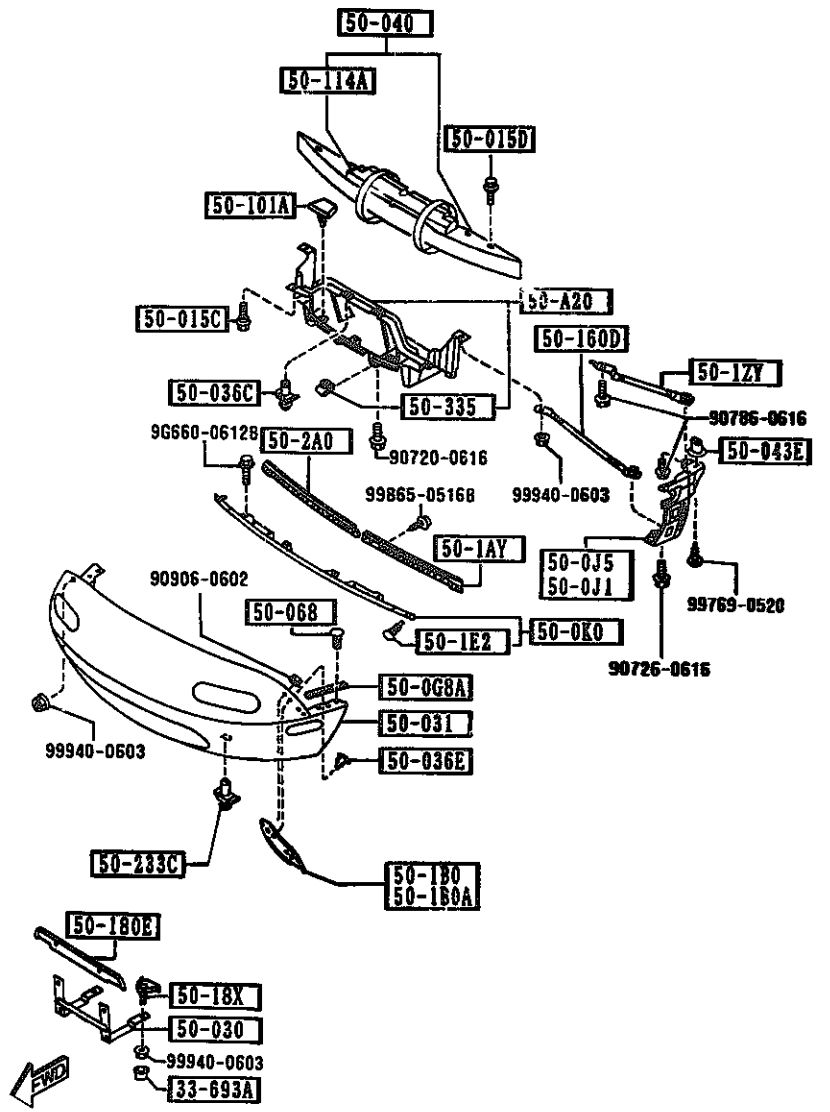

AUNA03

PART NO.	QTY	MODEL/RESTRICTION	MODEL/RESTRICTION	MODEL/RESTRICTION	FROM-TO
50-043E		SLIDE'A',BUMPER			
B092-50-032	2				
50-068		CLIP			
NA01-50-068	6				
50-1AY		PLATE,SET NO.1			
NA01-50-1AYB AN(NA01-50-1AYC)	1				-3701
NA01-50-1AYC	1				3701-
50-1B0		PLATE NO.2(R),SET-F. BUMPER			
NA01-50-1B0	1				
50-1B0A		PLATE NO.2(L),SET-F. BUMPER			
NA01-50-1C0	1				
50-1E2		BOLT			
NA01-50-1E2	2				
50-1ZY		BRACKET,FENDER			
NA01-50-1ZY	2				
50-101A		COVER,GRILLE			
NA01-50-101A	3				
50-114A		SPACER,E.A.FOAM			
NA01-50-114	1				
50-160D		BRACKET(L),F. BUMPER SIDE			
NA01-50-160	1	(A.LOCK BRAKE)			
NA01-50-160	2	(W/O A.LOCK BRAKE)			
50-18X		BRACKET,LICENCE PLATE			
NA01-50-18X	2				
50-180E		PROTECTOR,NO. PLATE			
FB01-50-144	1				
50-2A0		SET PLATE NO.1(R),RR BUMPER			
NA01-50-2A0A	1				-3701

3701 NA351#-423706

CAT. AUNA03-04

1994-10

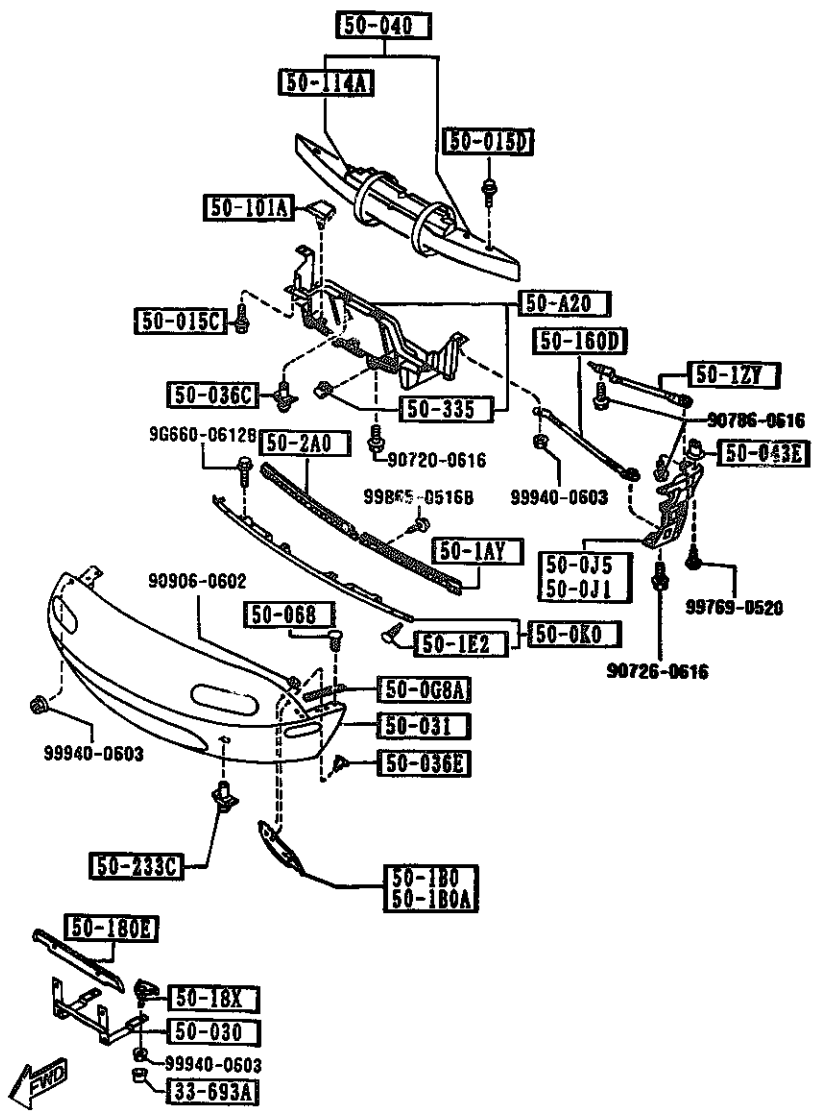

AUNA03

5000 -3 * FRONT BUMPER

PART NO.	QTY	MODEL/RESTRICTION	MODEL/RESTRICTION	MODEL/RESTRICTION	FROM-TO
CONT'D AN(NA01-50-2A08)					
NA01-50-2A08	1				3701-
50-233C		FASTENER,REAR BUMPER			
BF82-50-233	3				-3301
BF82-50-233	2				3301-
50-335		NUT,CLIP			
FB01-50-133C	4				

3301 NA351*-416214
3701 NA351*-423706

CAT. AUNA03-04

1994-10

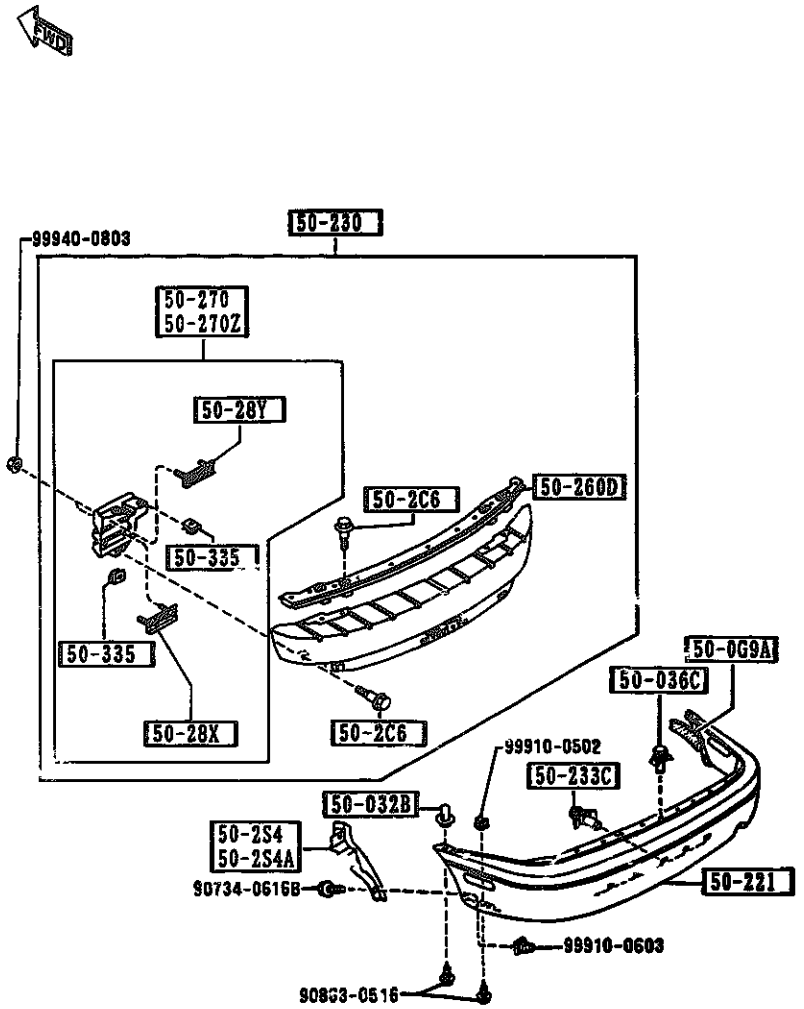

AUNA03

5010 -1 REAR BUMPER

PART NO.	QTY	MODEL/RESTRICTION	MODEL/RESTRICTION	MODEL/RESTRICTION	FROM-TO
50-0G9A NA01-50-0G8	2	SEAL,RUBBER-REAR BUMPER			
50-032B GJ21-50-032	2	SLIDE'UP.',BUMPER			
50-036C BF67-50-033	11	FASTENER			
50-2C6 NA01-50-2C6	6	BOLT			
50-2S4 NA01-50-2S4	1	SHIELD(R),SPLASH-R.BUMPER			
50-2S4A NA01-50-2S5	1	SHIELD(L),SPLASH-R.BUMPER			
50-221 NAY1-50-220A	1	BUMPER,REAR PAINT TO MATCH			
50-230 NA01-5G-260	1	REINFORCEMENT,BUMPER (W/O DAY TIME RUNNING LAMP)			
50-233C BF82-50-233	5	FASTENER,REAR BUMPER			
50-260D NA01-50-2J0	1	RETAINER,R.BUMPER			
50-270 NA01-50-280A	1	STAY(R),RR. BUMPER			
50-270Z NA01-50-290A	1	STAY(L),RR. BUMPER			
50-28X NA01-50-28X0	2	PLATE SET			

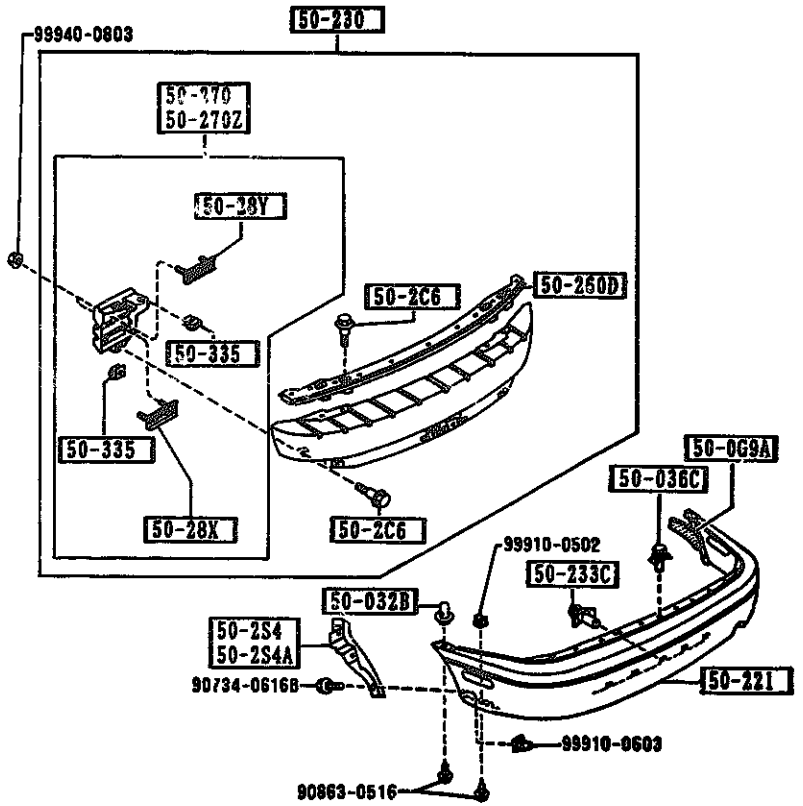

AUNA03

5010 -2 * REAR BUMPER

PART NO.	QTY	MODEL/RESTRICTION	MODEL/RESTRICTION	MODEL/RESTRICTION	FROM-TO
50-28Y		PLATE SET			
NA01-50-28YC	2				
50-335		NUT,CLIP			
NA01-50-133	6				

CAT. AUNA03-04

1994-10

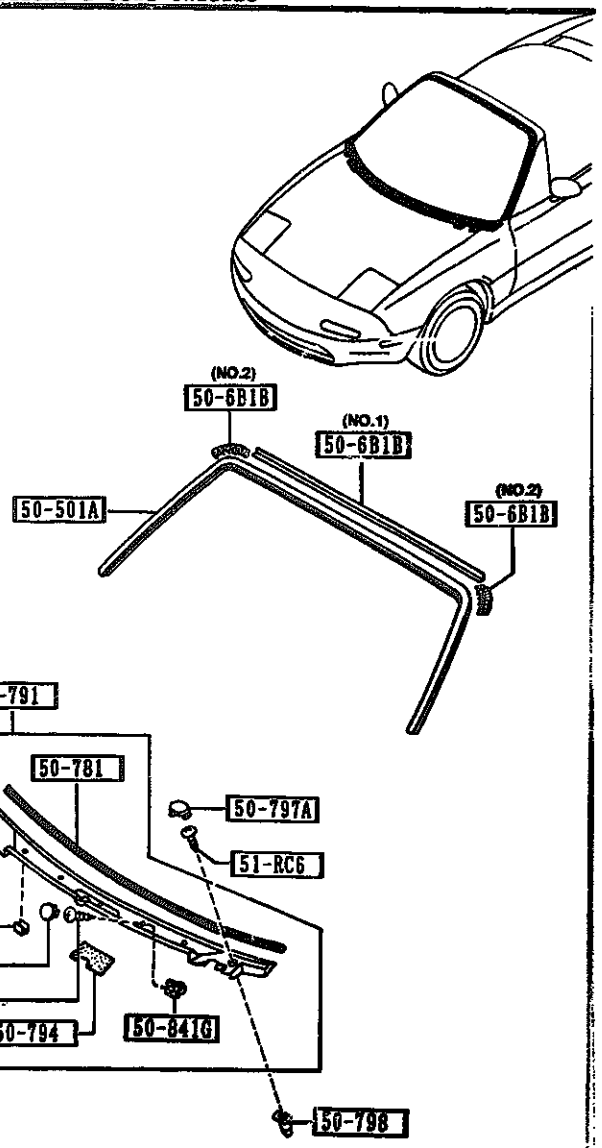

PART NO.	QTY	MODEL/RESTRICTION	MODEL/RESTRICTION	MODEL/RESTRICTION	FROM-TO
50-501A		MOULD(UP),FRT.WINDOW			
NAY1-50-601	1				
50-6B1B		PROTR,MOULD-FRT WINDOW			
NA01-50-6B1	1	(ILLUST. NO.1)			
NA01-50-6B2	2	(ILLUST. NO.2)			
50-781		PROTECTOR,COWL GRILLE			
NA01-50-792A	1				
50-791		GRILLE,COWL			
NA01-50-790D A (NA01-50-790E)	1				-2C01
NA01-50-790E	1				2C01-
50-794		PROTECTOR			
NA01-50-788	1				
50-796B		CAP			
B455-50-796 A (B455-50-796A)	5				-2C01
B455-50-796A	5				2C01-
50-797A		CAP			
N401-50-797 A (NA01-50-797A)	2				-2C01
NA01-50-797A	2				2C01-
50-798		SCREW,GROMMET			
NA01-50-798	2				
50-841G		GROMMET,SCREW			
NA01-51-789	5				
50-854A		PROTECTOR			
NA01-50-794	4				
51-RC6		SCREW,SIDE GARNISH			
N272-51-RC6	2				

2C01 NA351*-407249

5100 HEAD LAMPS

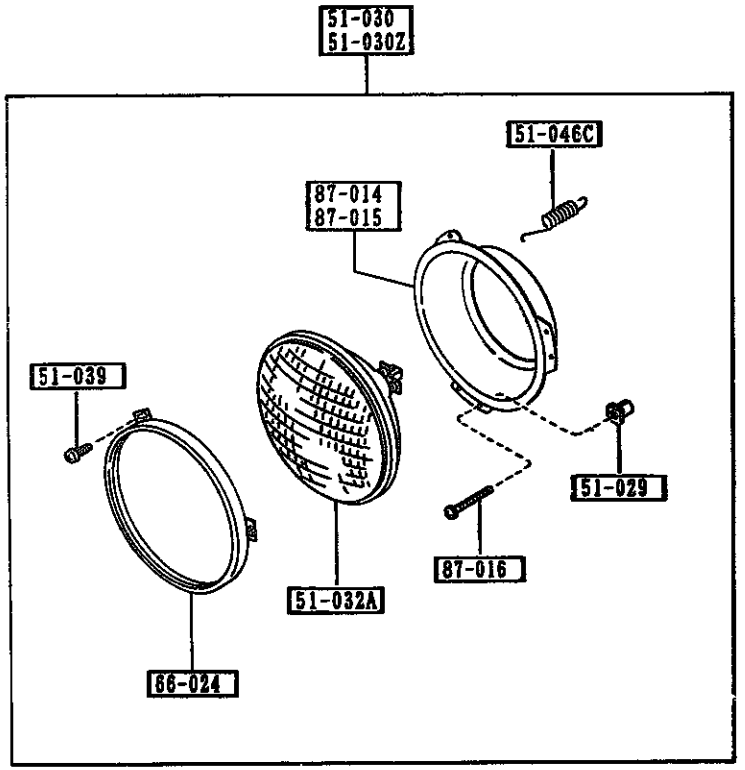

PART NO.	QTY	MODEL/RESTRICTION	MODEL/RESTRICTION	MODEL/RESTRICTION	FROM-TO
51-029		GROMMET,SCREW			
0483-66-061A	4				
51-030		LAMP SET(R),HEAD			
8BN1-51-030	1				
51-030Z		LAMP SET(L),HEAD			
8BN1-51-040	1				
51-032A		UNIT,HEAD LAMP			
NA02-51-051	2				
51-039		SCREW			
9481-51-0E3	6				
51-046C		SPRING			
NA01-51-046	2				
66-024		RING,RETAINING			
NA01-51-033	2				
87-014		RING(R)MOUNTING			
NA01-51-032	1				
87-015		RING(L)MOUNTING			
NA01-51-034	1				
87-016		SCREW,ADJUST			
NA01-51-037	4				

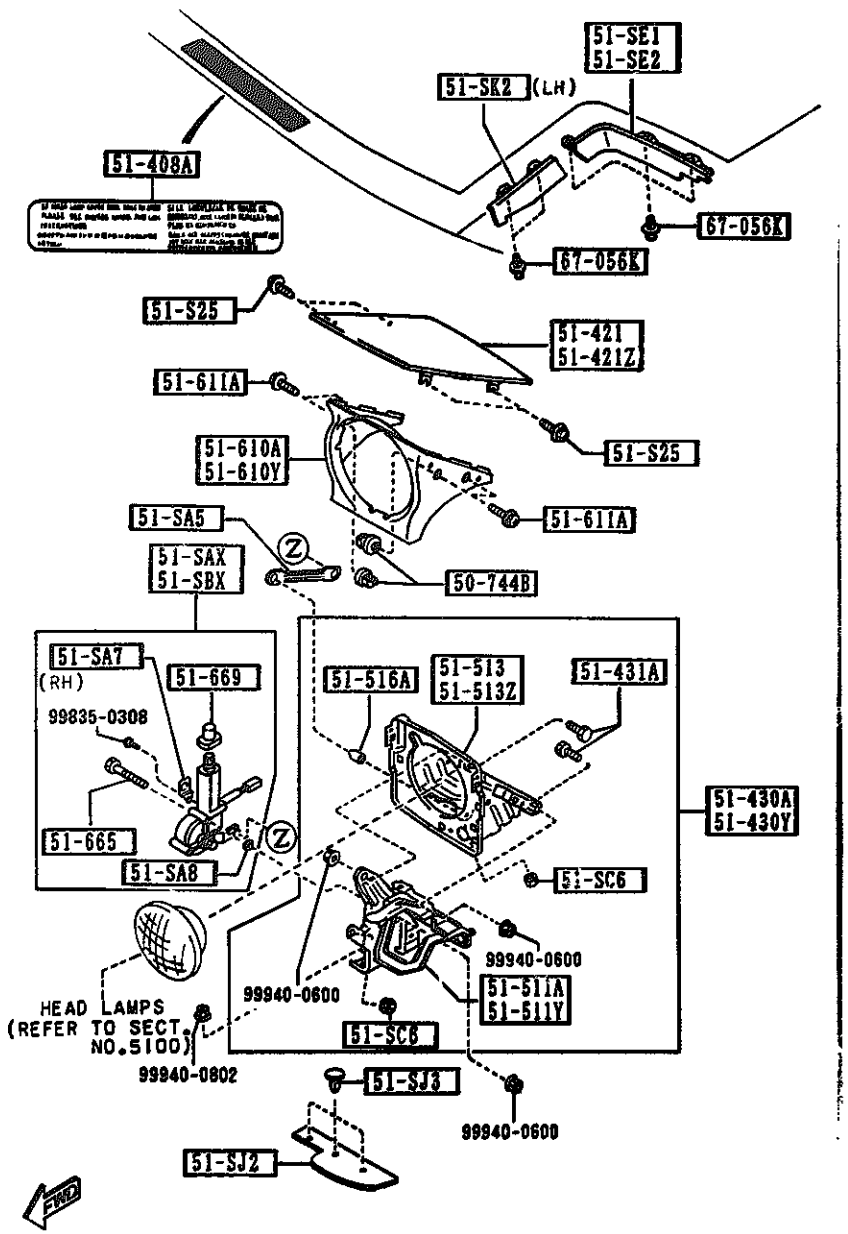

AUNA03

PART NO.	QTY	MODEL/RESTRICTION	MODEL/RESTRICTION	MODEL/RESTRICTION	FROM-TO
50-744B		GROMMET,SCREW			
8481-50-744	8				
51-SAX		MOTOR(R),RETRACTABLE HEAD			
NA01-51-SAX	1				
51-SA5		ROD,RETRACTABLE			
NA01-51-SA5	2				
51-SA7		BRACKET,CLIP			
NA01-51-SA7	1				
51-SA8		WASHER			
NA01-51-SA8	6				
51-SBX		MOTOR(L),RETRACTABLE HEAD			
NA01-51-SBX	1				
51-SC6		NUT,STOPPER-LAMP HINGE			
KA01-51-SC6	4				
51-SE1		PROTECTOR(R),RETRA H/L			
NA01-51-SE1	1				
51-SE2		PROTECTOR(L),RETRA. H/L			
NA01-51-SE2	1				
51-SJ2		PROTECTOR(L),RETRA. FRONT			
NA01-51-SJ2	2				
51-SJ3		CLIP			
NA01-51-SJ3	6				
51-SK2		PROTECTOR(L),RETRA. SIDE			
NA01-51-SK2	1				
51-S25		BOLT,LAMP LID			
BS34-51-S25A	8				
51-408A		LABEL,CAUTION-RETRACTABLE			
NA04-51-S02	1				

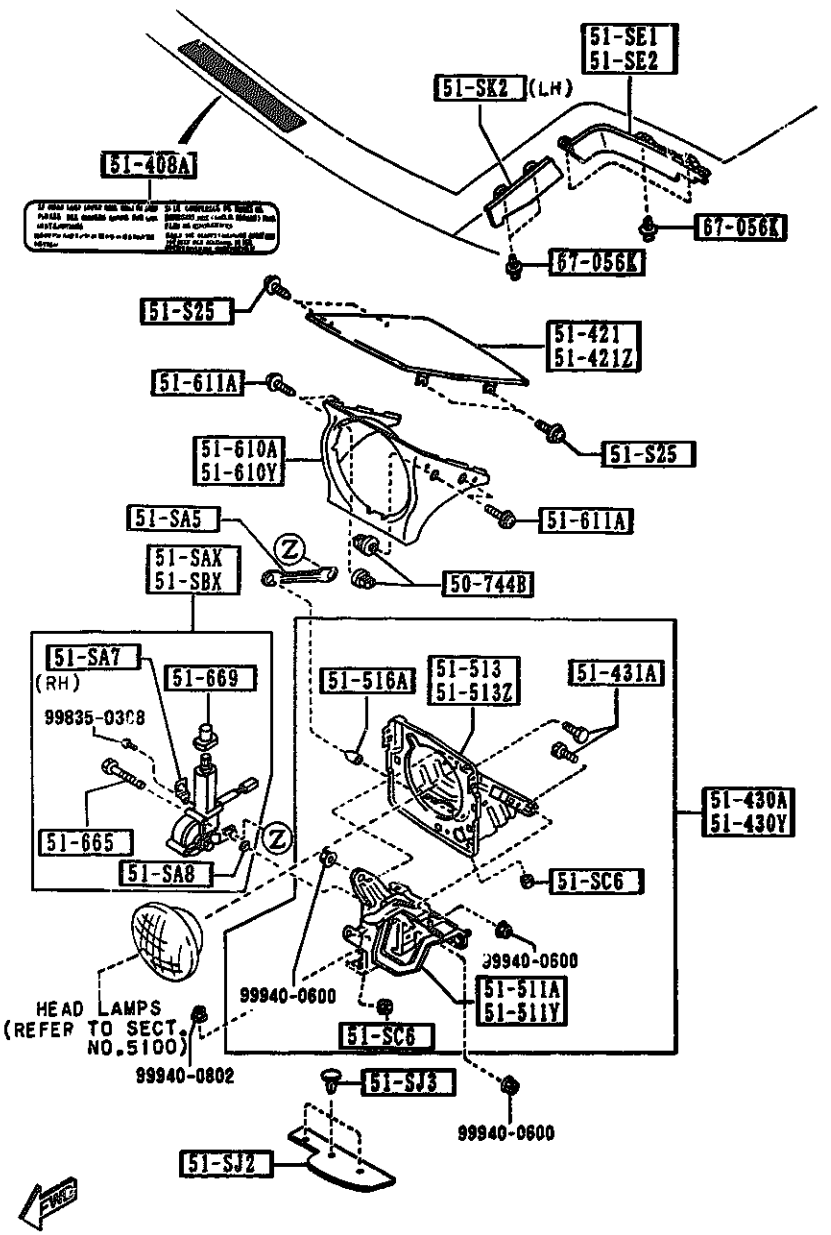

AUNA03

PART NO.	QTY	MODEL/RESTRICTION	MODEL/RESTRICTION	MODEL/RESTRICTION	FROM-TO
51-421 NA01-51-SH1B	1	LID(R),LAMP			
51-421Z NA01-51-SH2B	1	LID(L),LAMP			
51-430A NA01-51-SC0B	1	HINGE(R),LID-LAMP			
51-430Y NA01-51-SD0B	1	HINGE(L),LID-LAMP			
51-431A KA01-51-SD7	4	BOLT,HINGE			
51-511A NA01-51-SC1A	1	BRACKET(R),HINGE-LAMP LID			
51-511Y NA01-51-SD1A	1	BRACKET(L),HINGE-LAMP LID			
51-513 NA01-51-SC5B	1	HOUSING(R),LAMP-LID HINGE			
51-513Z NA01-51-SD5B	1	HOUSING(L),LAMP-LID HINGE			
51-516A KA01-51-SD6	2	CAP,HINGE-H.L.RETRACTABLE			
51-610A NA01-50-741	1	BEZEL(R),HEAD LAMP			
51-610Y NA01-50-751	1	BEZEL(L),HEAD LAMP			
51-611A B481-50-75X	8	SCREW,HEAD LAMP BEZEL			
51-665 FB01-51-665	6	BOLT,MOTOR-RETRACT H/LAMP			

CAT. AUNA03-04

1994-10

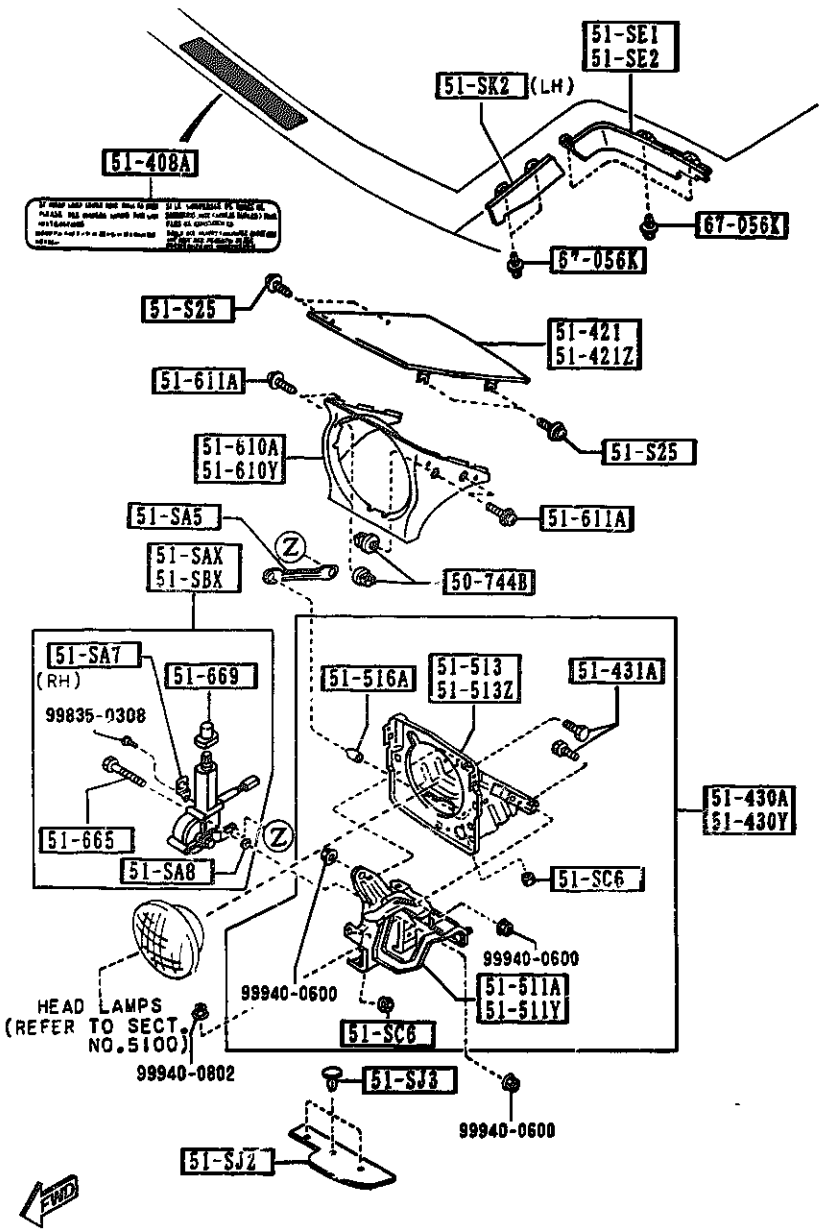

AUNA03

5103 -3 * HEAD LAMP RETRACTORS

PART NO.	QTY	MODEL/RESTRICTION	MODEL/RESTRICTION	MODEL/RESTRICTION	FROM-TO
51-669		BOOT,MOTOR-RETRACT H/L			
NA01-51-669	2				
67-056K		RIVET			
UB39-50-795	8				

CAT. AUNA03-04

1994-10

5105 FRONT COMBINATION LAMPS

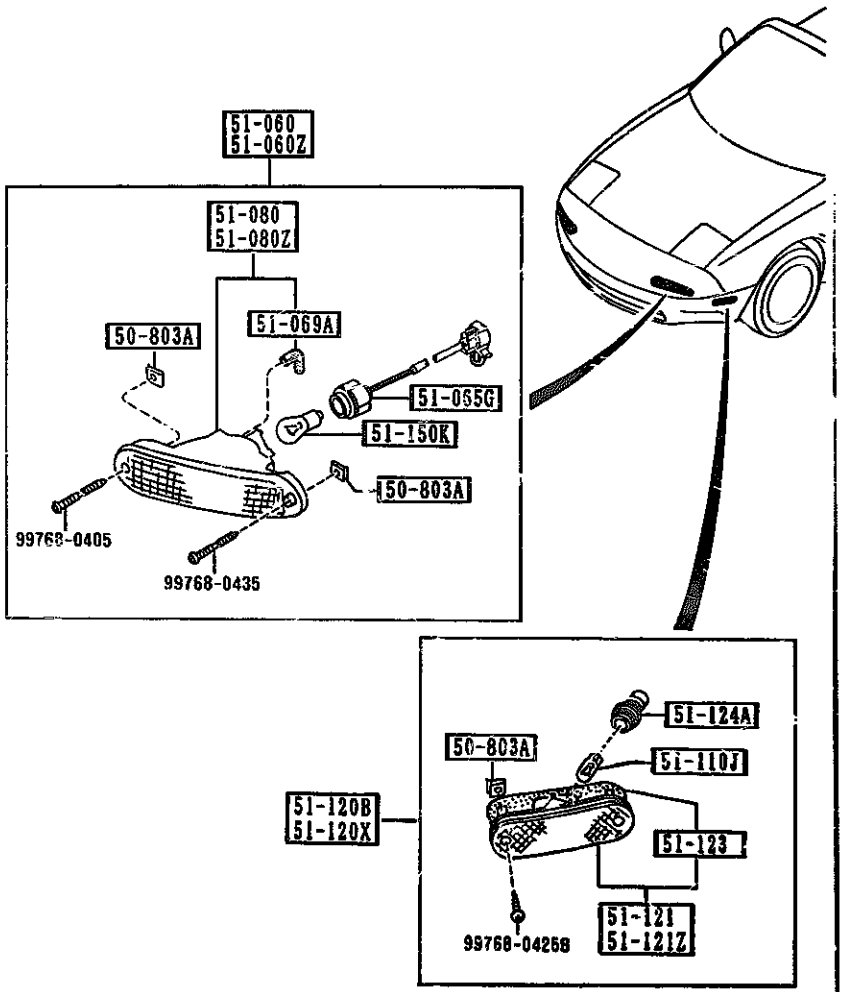

PART NO.	QTY	MODEL/RESTRICTION	MODEL/RESTRICTION	MODEL/RESTRICTION	FROM-TO
50-803A		NUT,SIDE PROTECTOR			
G158-50-803	8				
51-060		LAMP SET(R),FRT COMB			
8BN1-51-060	1	(W/O DAY TIME RUNNIN G LAMP)			
51-060Z		LAMP SET(L),FRT COMB			
8BN1-51-070	1	(W/O DAY TIME RUNNIN G LAMP)			
51-065G		SOCKET,F. COMB. LAMP			
NA01-51-064	2	(W/O DAY TIME RUNNIN G LAMP)			
51-069A		TUBE,HEAD LAMP			
NA01-51-069	2				
51-080		LENS & HOUSING(R)			
NA01-51-06XA	1				
51-080Z		LENS & HOUSING(L)			
NA01-51-07XA	1				
51-110J		BULB			
99701-6038	2	12V 3.8W			
51-120B		LAMP SET(R),SIDE TUR N			
8BN1-51-120	1				
51-120X		LAMP SET(L),SIDE TUR N			
8BN1-51-130	1				
51-121		LENS & BODY(R)			
NA01-51-5EXA	1				
51-121Z		LENS & BODY(L)			
NA01-51-5FXA	1				
51-123		GASKET,SIDE TURN			
NA01-51-5D3A	2				

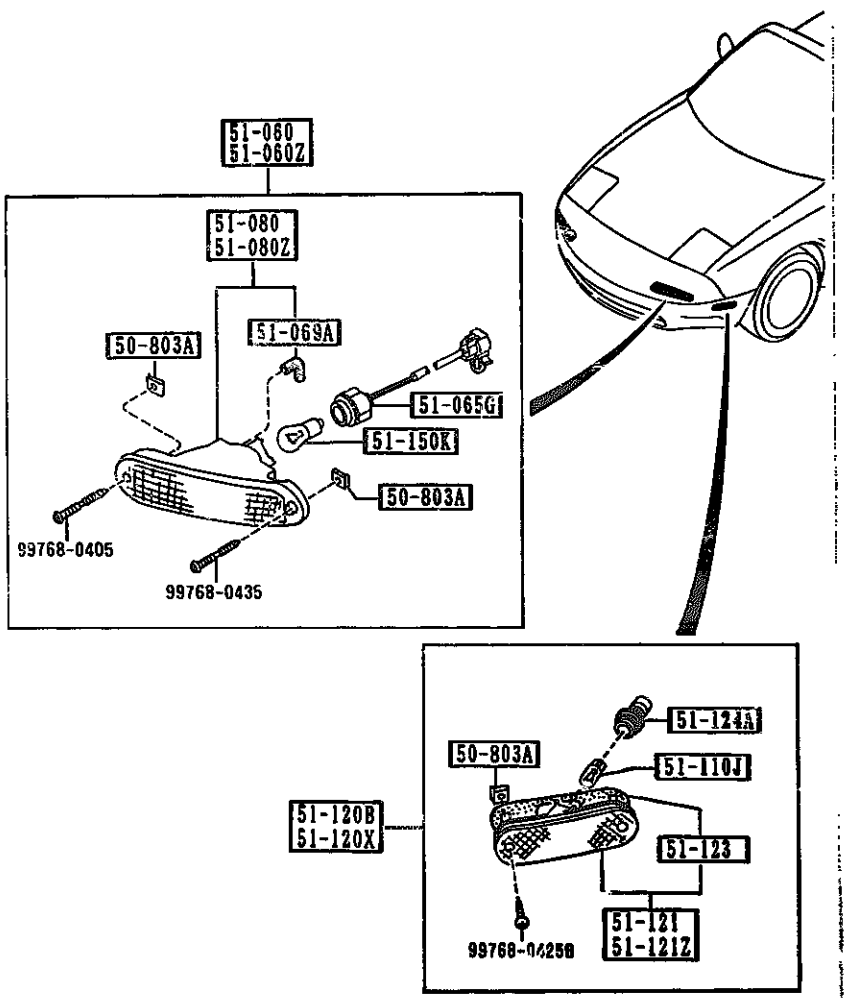

5105 -2 * FRONT COMBINATION LAMPS

PART NO.	QTY	MODEL/RESTRICTION	MODEL/RESTRICTION	MODEL/RESTRICTION	FROM-TO
51-124A		SOCKET,SIDE TURN			
NA01-51-5E2	2				
51-150K		BULB			
99701-4278Y	2	A12V 27/8W			

5110 REAR COMBINATION LAMPS

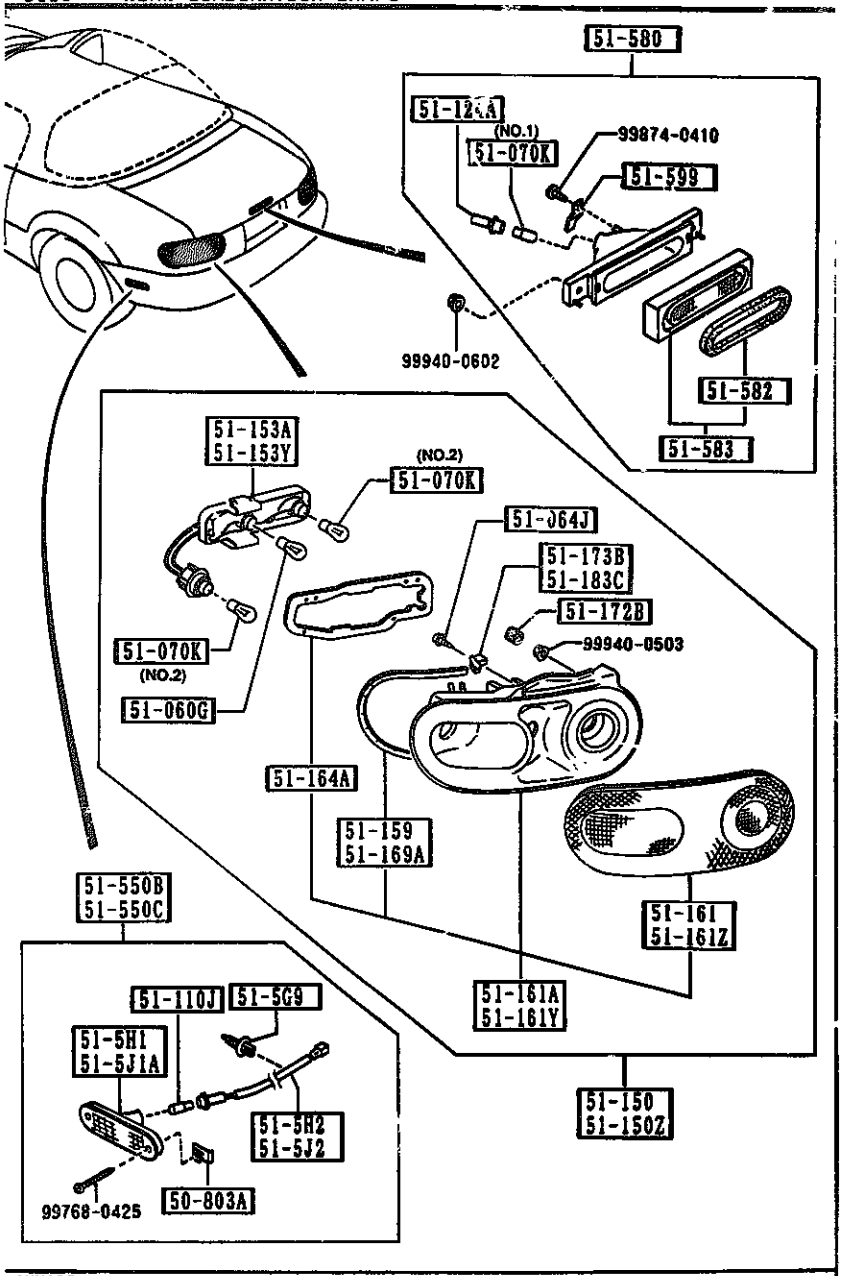

AUNA03

PART NO.	QTY	MODEL/RESTRICTION	MODEL/RESTRICTION	MODEL/RESTRICTION	FROM-TO
50-803A		NUT,SIDE PROTECTOR			
0158-50-803	4				
51-060G		BULB			
99701-4278	2	12V 27W/8W			
51-064J		SCREW,TAPPING			
NA01-51-1E6	2				-3401
51-070K		BULB			
99700-7180	1	A12V 18.4W (ILLUST. NO.1)			
99701-3270	4	12V 27W (ILLUST. NO.2)			
51-110J		BULB			
99701-6038	2	12V 3.8W			
51-124A		SOCKET,SIDE TURN			
BJ38-51-584	1				
51-150		LAMP SET(R),RR.COMB.			
8BN1-51-150	1				
51-150Z		LAMP SET(L),RR.COMB.			
8BN1-51-160	1				
51-153A		SOCKET(R),RR.COMB.			
N001-51-155A	1				
51-153Y		SOCKET(L),RR.COMB.			
N001-51-165A	1				
51-159		PROTECTOR(R),'A'			
NA01-51-159	1				
51-161		LENS(R),RR.COMB.			
NA01-51-15X8	1				
51-161A		LENS & BODY(R),RR COMB.			

3401 NA351#-418700

CAT. AUNA03-04

1994-10

5110 REAR COMBINATION LAMPS

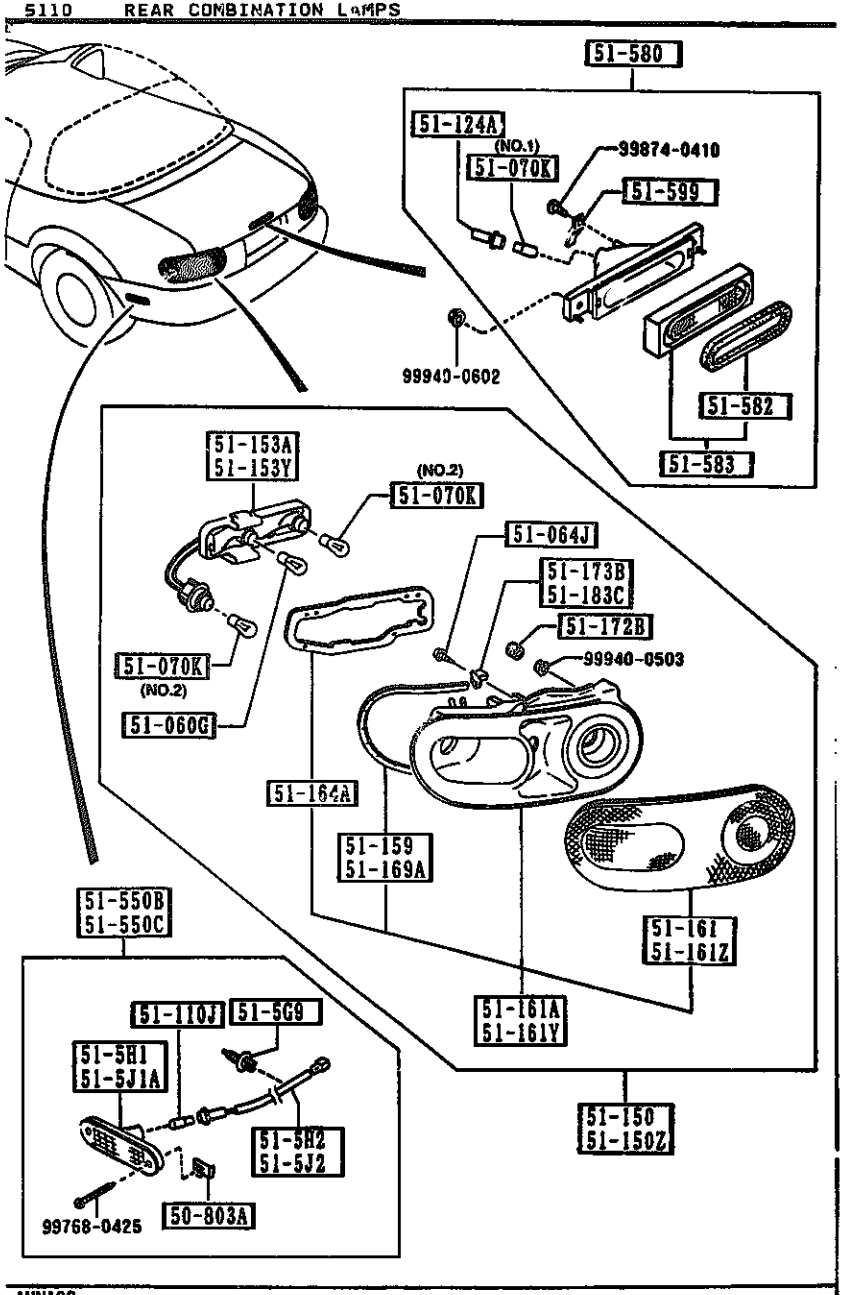

AUNA03

PART NO.	QTY	MODEL/RESTRICTION	MODEL/RESTRICTION	MODEL/RESTRICTION	FROM-TO
CONT'D					
NA01-51-170B	1				
51-161Y		LENS & BODY(L),RR COMB.			
NA01-51-180B	1				
51-161Z		LENS(L),RR.COMB.			
NA01-51-16XB	1				
51-164A		GASKET,RR.COMB.			
NA01-51-158	2				
51-169A		PROTECTOR(L),'A'			
NA01-51-169	1				
51-172B		CAP			
G030-51-172	3				
51-173B		PROTECTOR(R),'B'			
NA01-51-173	1				-3401
51-183C		PROTECTOR(L),'B'			
NA01-51-183	1				-3401
51-5G9		CLIP			
NA01-51-5G9	8				
51-5H1		LENS & BODY(R),RR SIDE TURN			
NA01-51-5H1C	1				
51-5H2		SOCKET(R),RR SIDE TURN			
NA01-51-5H2A	1				
51-5J1A		LENS & BODY(L),RR SIDE TURN			
NA01-51-5J1C	1				
51-5J2		SOCKET(L),RR SIDE TURN			
NA01-51-5J2A	1				
51-550B		LAMP SET(R),SIDE TURN-RR			
88N1-51-550	1				

3401 NA351*-618700

CAT. AUNA03-04

1994-10

5110 REAR COMBINATION LAMPS

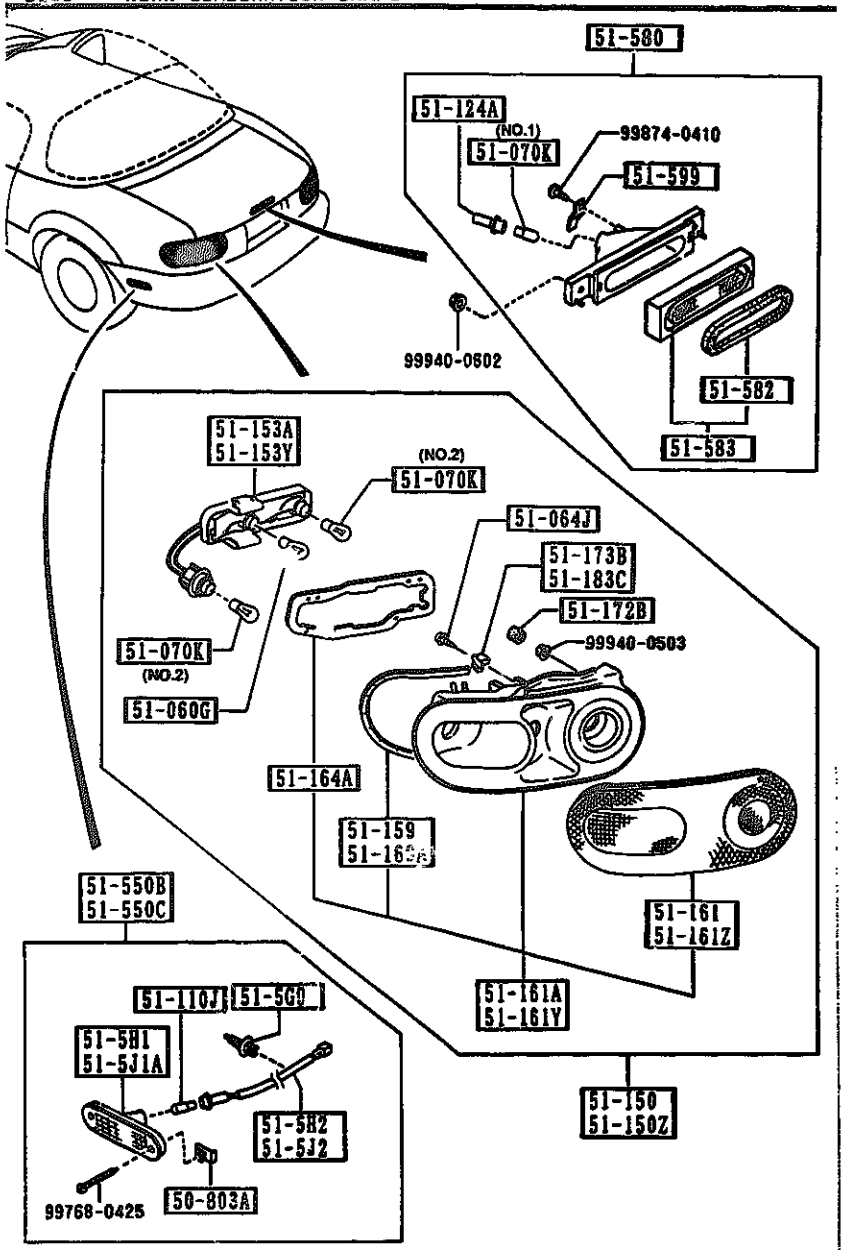

AUNA03

PART NO.	QTY	MODEL/RESTRICTION	MODEL/RESTRICTION	MODEL/RESTRICTION	FROM-TO
51-550C 8BN1-51-560	1	LAMP SET(L),SIDE TURN-RR			
51-580 NA01-51-580B	1	LAMP,STOP-HI.MOUNT.			
51-582 NA01-51-592B	1	GASKET,STOP LAMP-HI.MOUNT			
51-583 NA01-51-58XA	1	LENS,STOP LAMP-HI.MOUNT			
51-599 NA01-51-599	1	FASTENER,STOP LAMP-HI.			

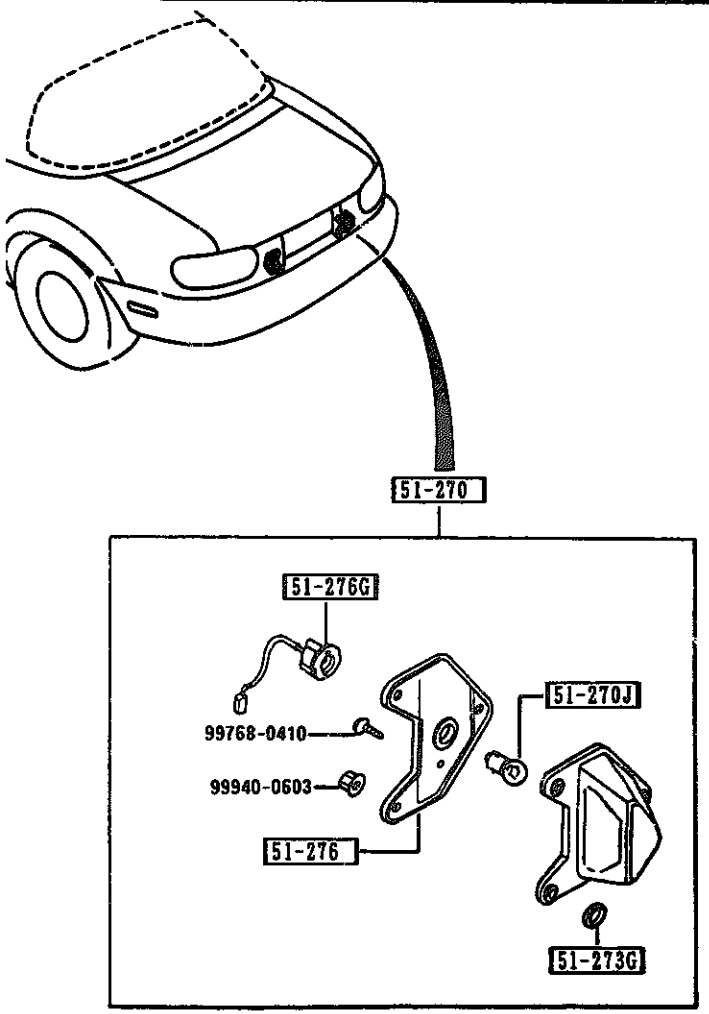

PART NO.	QTY	MODEL/RESTRICTION	MODEL/RESTRICTION	MODEL/RESTRICTION	FROM-TO
51-270		LAMP,LICENSE			
8BF1-51-270	2				
51-270J		BULB			
99701-2070	2	12V 7.5W			
51-273G		GASKET,LICENSE LAMP			
FB67-51-273	2				
51-276		SHADE,LAMP-LICENSE			
FB67-51-276	2				
51-276G		SOCKET,LICENSE LAMP			
FB67-51-272	2				

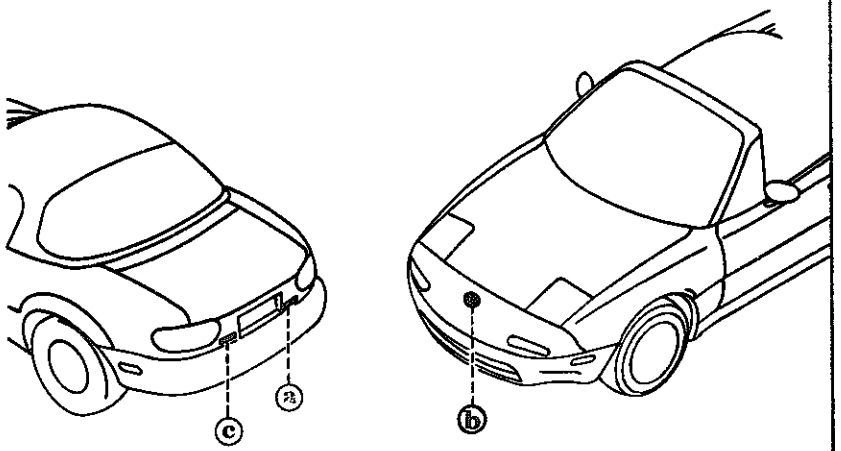

ⓐ 51-711B



ⓒ 51-781



51-791B

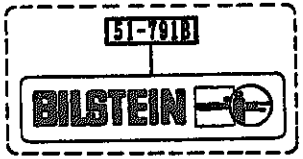

ⓑ 51-711A



AUNA03

5170 -1 * ORNAMENTS

PART NO.	QTY	MODEL/RESTRICTION	MODEL/RESTRICTION	MODEL/RESTRICTION	FROM-TO
51-711A		ORNAMENT,FRONT			
BB1H-51-731	1				
51-711B		ORNAMENT,MAKER NAME-REAR			
NA01-51-711	1				
51-781		ORNAMENT,REAR			
NA01-51-721	1				
51-791B		LABEL,BILSTEIN			
N021-51-790	1	(BILSTEIN DAMP.)			

CAT. AUNA03-04

1994-10

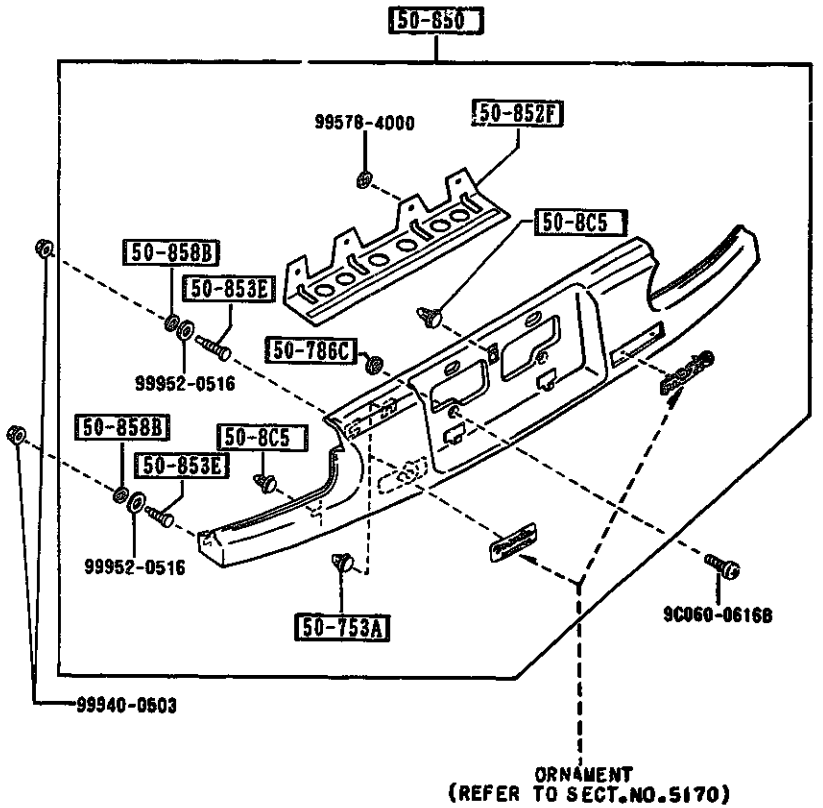

5180 -1 * REAR FINISHER

PART NO.	QTY	MODEL/RESTRICTION	MODEL/RESTRICTION	MODEL/RESTRICTION	FROM-TO
50-753A		FASTENER			
G043-50-753	4				
50-786C		GASKET			
G030-50-786	2				
50-8C5		CLIP			
B467-50-8C5	3				
50-850		FINISHER,REAR			
NA01-50-850G	1				
DU	EXT-	DU MARINER BLUE			
HU	EXT-	HU NEO GREEN			
HZ	EXT-	HZ SUNBURST YELLOW			
PZ	EXT-	PZ BRILLIANT BLACK			
SU	EXT-	SU CLASSIC RED			
UC	EXT-	UC CRYSTAL WHITE			
3L	EXT-	3L SILVER STONE METALLIC			
50-852F		REINFORCEMENT			
NA01-50-852	1				
50-853E		BOLT,GARNISH-RR			
LA01-50-853	4				
50-858B		GASKET,REAR FINISHER			
B388-50-855	4				

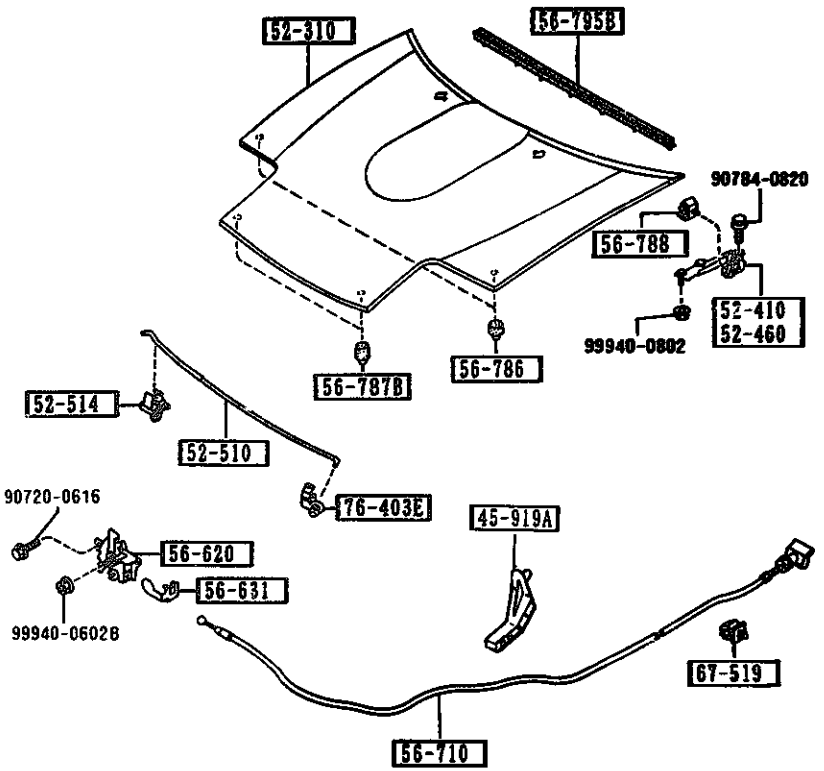

AUNA03

5230 -1 BONNET

PART NO.	QTY	MODEL/RESTRICTION	MODEL/RESTRICTION	MODEL/RESTRICTION	FROM-TO
45-919A H115-45-916A	1	HOLDER,PIPE			
52-310 NAY1-52-310B	1	BONNET			
52-410 NA01-52-410A	1	HINGE(R),BONNET			
52-460 NA01-52-420A	1	HINGE(L),BONNET			
52-510 NA01-56-650	1	STAY,BONNET			
52-514 G030-56-693	1	HOLDER,ROD			
56-620 NA01-56-620A	1	LOCK,BONNET			
56-631 LA01-56-631	1	FASTENER,BONNET RELEASE			
56-710 NA01-56-720D	1	WIRE,RELEASE-BONNET			
00	INT-	NA0 NA1 NA2 BLACK			
56-786 NA01-56-787	2	RUBBER(C),CUSHION-BONNET			
56-787B FB01-56-787A	2	RUBBER,CUSHION-BONNET FRT			
56-788 NA01-56-78X	2	RUBBER,CUSHION-BONNET RR			
56-795B NA01-56-760	1	WEATHERSTRIP,BONNET-REAR			

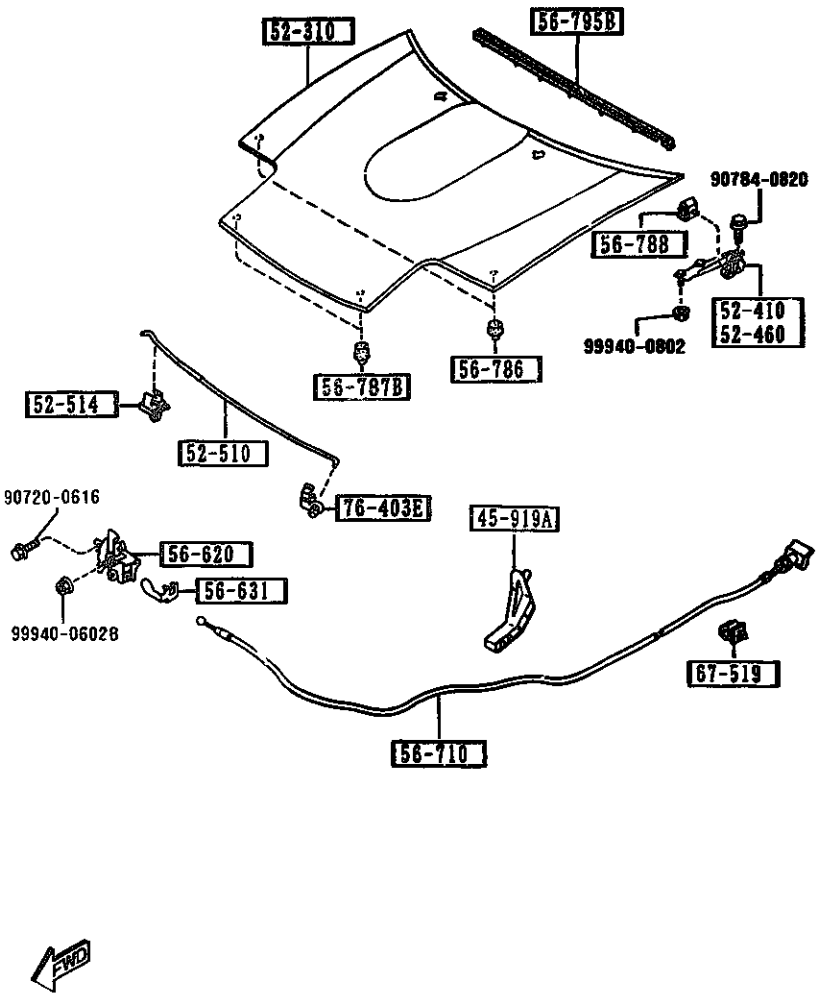

AUNA03

5230 -2 * BONNET

PART NO.	QTY	MODEL/RESTRICTION	MODEL/RESTRICTION	MODEL/RESTRICTION	FROM-TO
67-519		CLIP,?IPE			
G030-67-519	1				
76-403E		HOLDER,ROD			
B092-52-518	1				

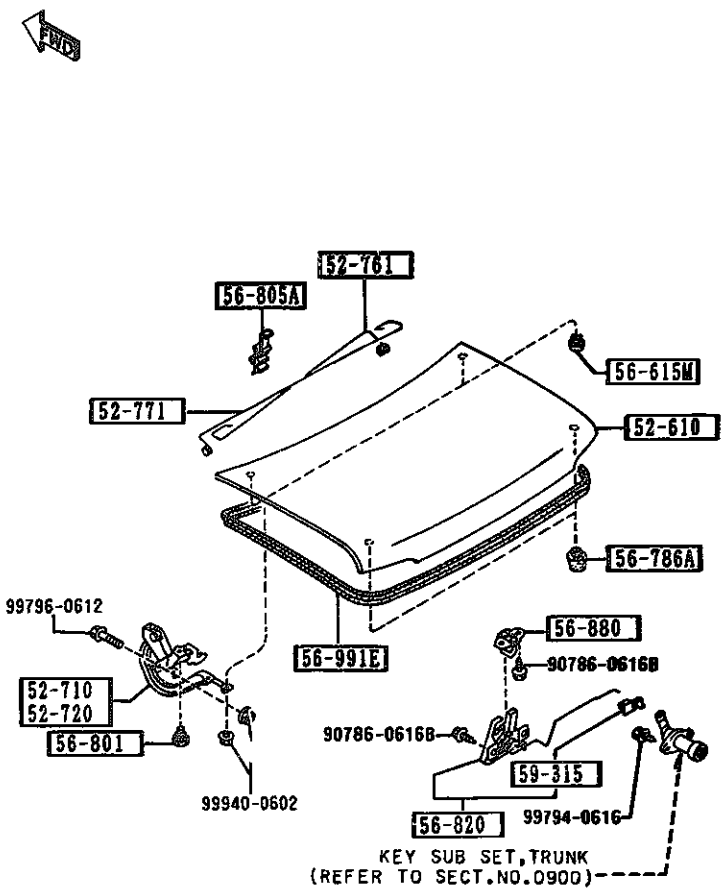

5260 -1 * TRUNK LID

PART NO.	QTY	MODEL/RESTRICTION	MODEL/RESTRICTION	MODEL/RESTRICTION	FROM-TO
52-610		LID,TRUNK			
NAY1--2-610B	1				
52-710		HINGE(R),TRUNK LID			
NA01-52-710A	1				
52-720		HINGE(L),TRUNK LID			
NA01-52-720A	1				
52-761		SPRING(R),BALANCE			
NA01-52-791A	1				
52-771		SPRING(L),BALANCE			
NA01-52-792A	1				
56-615M		PLUG,DRAIN			
NA01-56-051	2				
56-786A		RUBBER,CUSHION			
B481-56-786	2				
56-801		CUSHION,LID HINGE			
NA01-56-803	2				
56-805A		HOLDER,BALANCE SPRING			
NA01-56-805	1				
56-820		LOCK,LID			
N007-56-820	1				
56-880		STRIKER,LID			
NA01-56-840	1				
56-991E		WEATHERSTRIP,LID			
NA01-56-951	1				
59-315		CLIP			
G030-59-315	1				

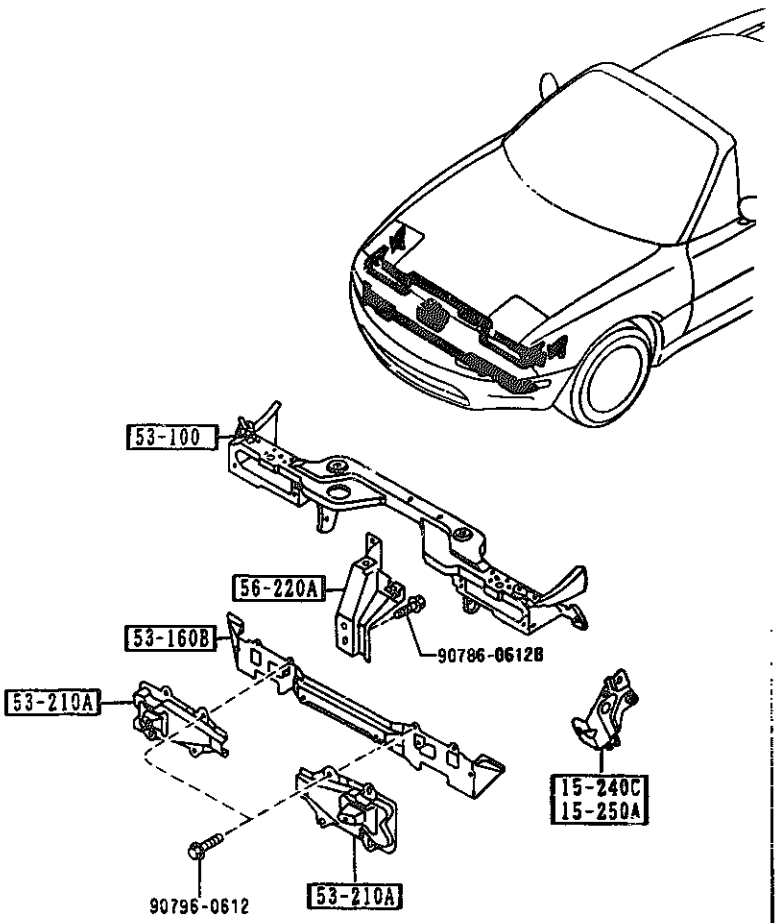

PART NO.	QTY	MODEL/RESTRICTION	MODEL/RESTRICTION	MODEL/RESTRICTION	FROM-TO
15-240C		BRACKET(R),RADIATOR			
B61P-15-240 AN(B61P-15-240A)	1				-3513
B61P-15-240A	1				3513-
15-250A		BRACKET(L),RADIATOR			
B61P-15-250 AN(B61P-15-250A)	1				-3513
B61P-15-250A	1				3513-
53-100		PANEL,RAD.SHROUD			
NA01-53-100F	1				
53-160B		MEMBER,CROSS			
NA01-53-16XC	1				
53-210A		BRACKET,BUMPER			
NA01-54-180	2				
56-220A		STAY,LOCK-BONNET			
NA01-56-221B	1				

3513 NA351K-420883

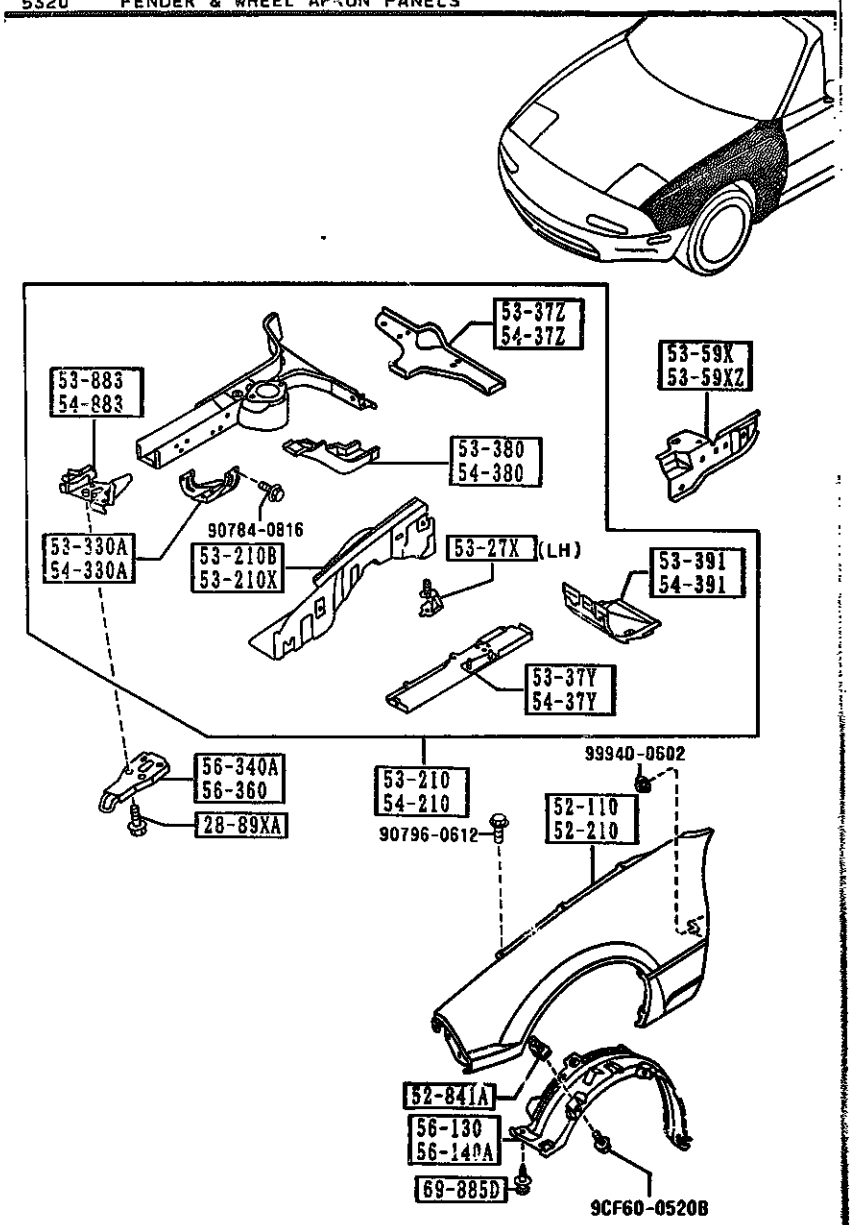

PART NO.	QTY	MODEL/RESTRICTION	MODEL/RESTRICTION	MODEL/RESTRICTION	FROM-TO
28-89XA GJ21-28-89X	6	BOLT,CROSS MEMBER			
52-110 NAY1-52-110	1	PANEL(R),FENDER-FRT.			
52-210 NAY1-52-210	1	PANEL(L),FENDER-FRT.			
52-841A LA01-56-135	10	NUT,CLIP			
53-210 NAY1-53-200D	1	PANEL(R),WHEEL APRON			
53-210B NA01-53-210E	1	PANEL(R),WHEEL APRON			
53-210X NA01-54-210F	1	PANEL(L),WHEEL APRON			
53-27X NA01-54-36X	1	BRKT,AIR CLNR-WHL APRON			
53-330A NA01-53-330	1	BRACKET(R),STABILIZER			
53-37Y NA01-53-37Y	1	FRAME(UP.,R),FRONT-FRT			
53-37Z NA01-53-37ZA	1	FRAME(UP.R),FRONT-REAR			
53-380 NA01-53-380	1	REINFORCEMENT(R)			
53-391 NA01-53-391	1	BOX(R),TORQUE			
53-59X NA01-53-591	1	REINF.(R),WHEEL APRON			

5320 FENDER & WHEEL APRON PANELS

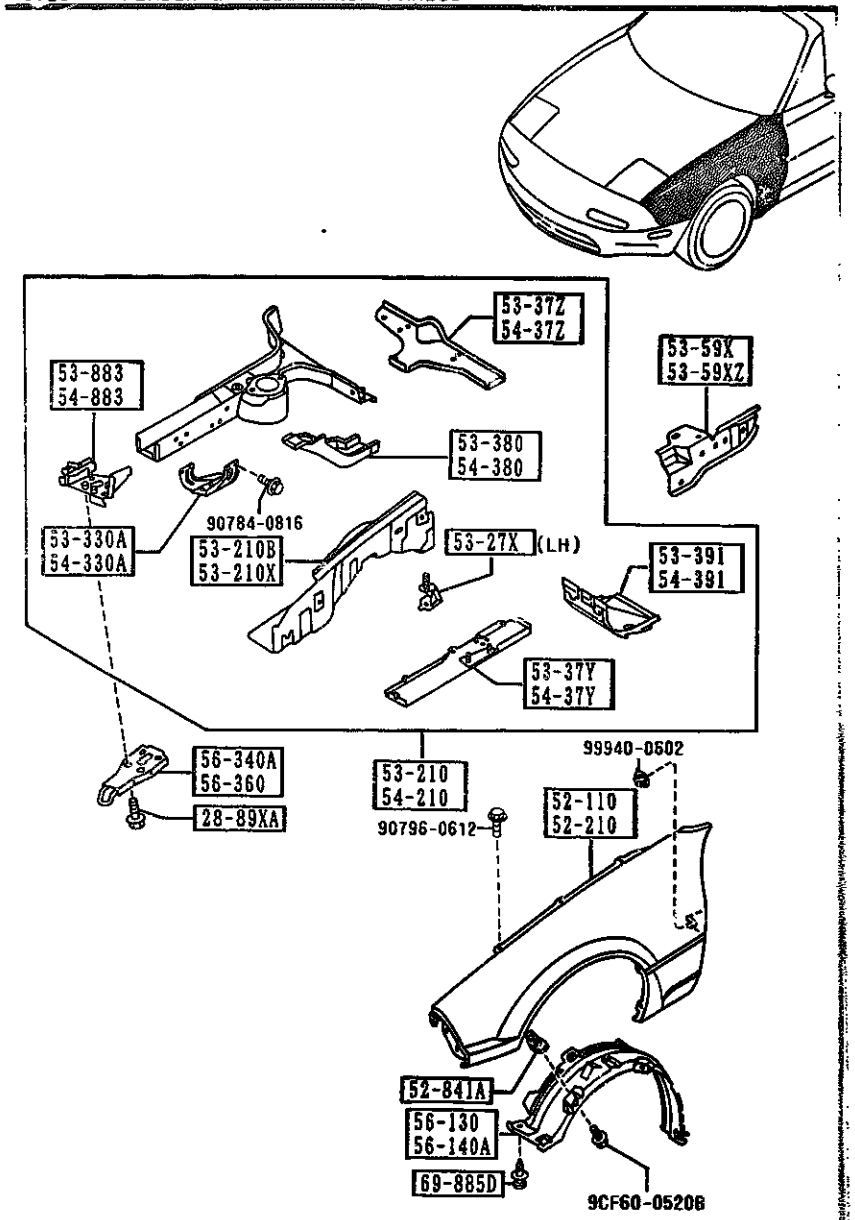

PART NO.	QTY	MODEL/RESTRICTION	MODEL/RESTRICTION	MODEL/RESTRICTION	FROM-TO
53-59XZ NA01-54-590	1	REINF.(L),WHEEL APRON			
53-883 NA01-53-32XB	1	REINF.(R),TIE DOWN HOOK			
54-210 NAY1-54-200D	1	PANEL(L),WHEEL APRON			
54-330A NA01-54-330	1	BRACKET(L),STABILIZER			
54-37Y NA01-54-37Y	1	FRAME(UP.,L),FRONT-FRT			
54-37Z NA01-54-37ZA	1	FRAME(UP.L),FRONT-REAR			
54-380 NA01-54-380B	1	FRAME(L),FRONT-REAR			
54-391 NA01-54-391	1	BOX(L),TORQUE			
54-883 NA01-54-32XC	1	REINF.(L),TIE DOWN HOOK			
56-130 NA01-56-131A	1	GUARD(R),MUD			
56-140A NA01-56-141C	1	GUARD(L),MUD			
56-340A NA01-56-34XC	1	HOOK(R),TIE DOWN-FRONT			
56-360 NA01-56-34YC	1	HOOK(L),TIE DOWN-FRONT			
69-885D NA01-56-1C5	10	FASTENER			

5330 DASH & COWL PANELS

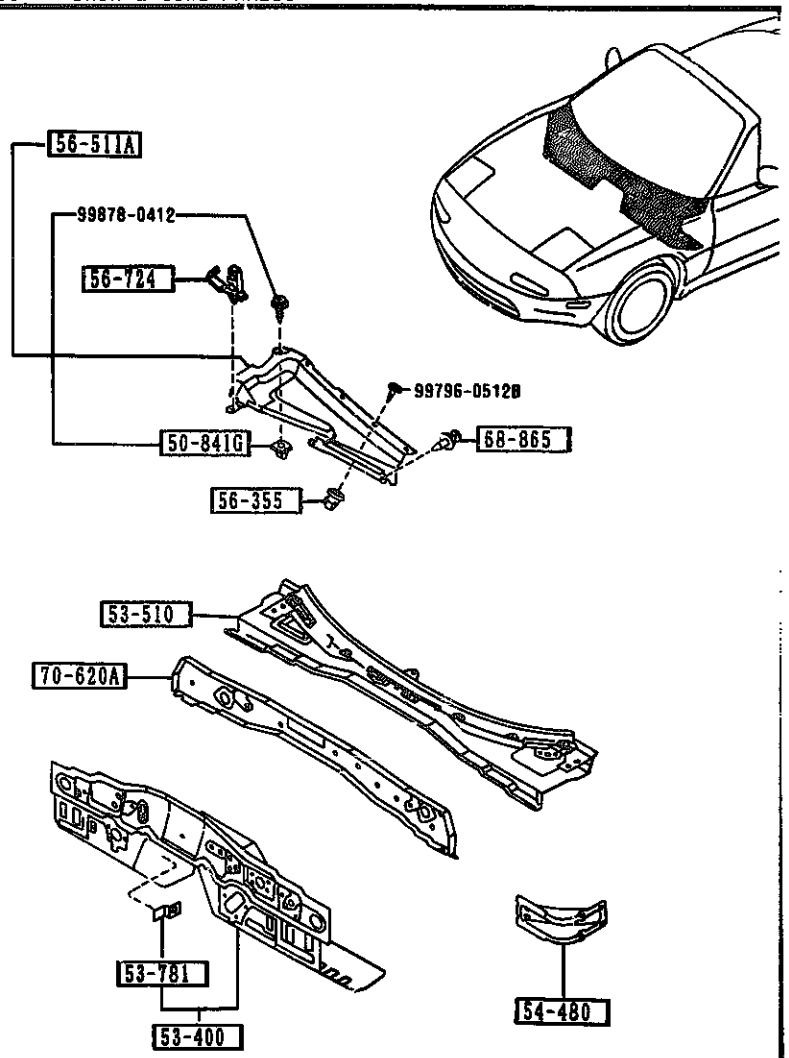

PART NO.	QTY	MODEL/RESTRICTION	MODEL/RESTRICTION	MODEL/RESTRICTION	FROM-TO
50-841G		GROMMET,SCREW			
F044-51-912	1				
53-400		PANEL,DASH-LOWER			
NA01-54-400G	1				
53-510		PANEL,DASH-UPPER			
NA01-53-510D C (NA01-53-510E)	1				-3510
NA01-53-510E	1				3510-
53-781		BRACKET,GRILLE-C			
0305-53-781A	1				
54-480		JUNCTION,DASH SIDE-S .SILL			
NA01-54-480	2				
56-355		GROMMET,SCREW-BAFFLE			
G211-56-355A	4				
56-511A		COVER,BAFFLE-COWL PA NEL			
NA01-56-35X	1				
56-724		CLIP'B',WIRE-BONNET			
H260-56-724	1				
68-865		FASTENER			
B040-68-865A	2				
00	INT-	NA0 NA1 NA2 BLACK			
70-620A		PANEL,COWL-FRONT			
NA01-70-62YB	1				

NA01-53-510D 3510 NA351*-420811
C NA01-53-510E 1
FC66-57-K98 2

5340 SIDE PANELS

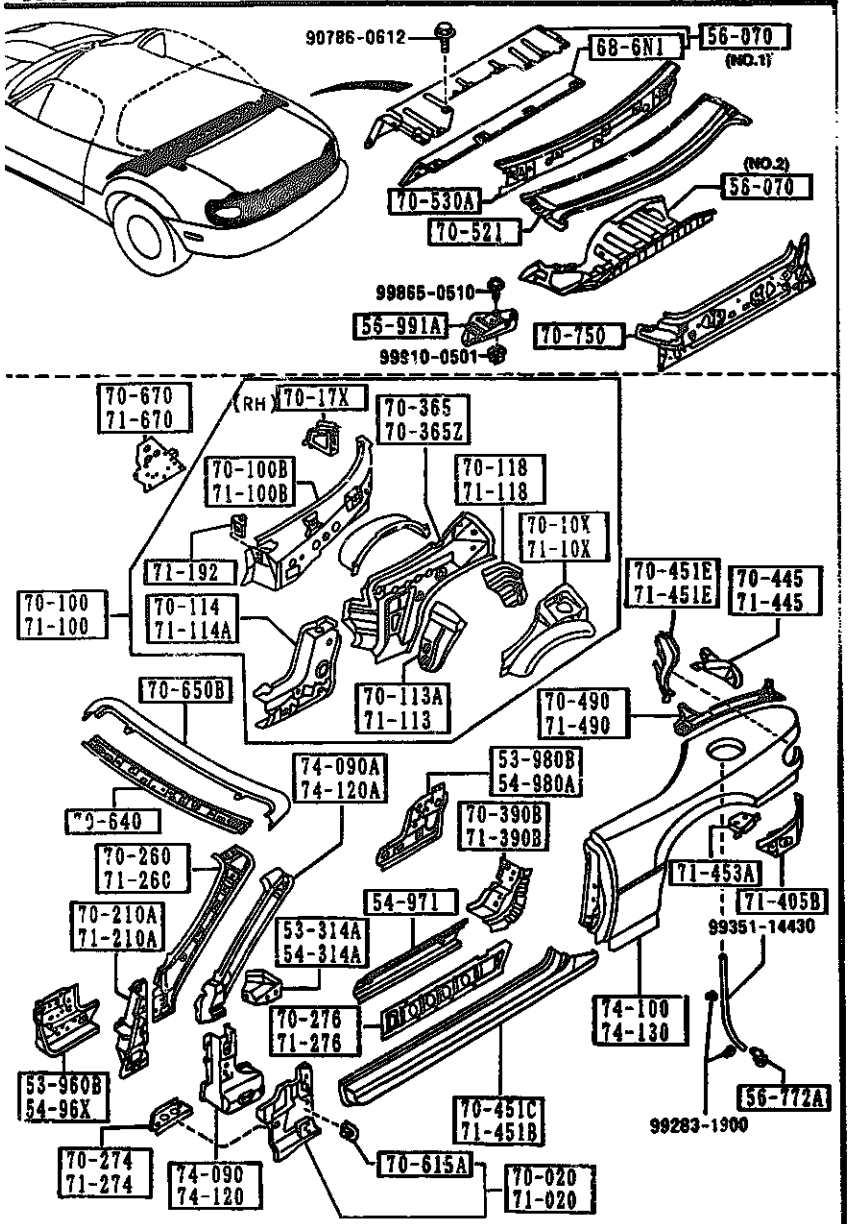

AUNA03

5340 -1 SIDE PANELS

PART NO.	QTY	MODEL/RESTRICTION	MODEL/RESTRICTION	MODEL/RESTRICTION	FROM-TO
53-314A NA01-70-071A	1	BRACKET(R),INST.			
53-960B NA01-53-960B	1	SILL(FRT.R),SIDE-INNER			
53-980B NA01-53-980B	1	SILL(RR.R),SIDE-INNER			
54-314A NA01-71-071A	1	BRACKET(L),INST.			
54-96X NA01-54-96XB	1	SILL(FRT.L),SIDE-INNER			
54-971 NA01-54-971	2	SILL(C),SIDE-INNER			
54-980A NA01-54-980B	1	SILL(RR.L),SIDE-INNER			
56-070 NA01-70-51Y	1	PANEL,BULK HEAD (ILLUST. NO.2)			
NA01-56-39Y AN(NA01-56-39YA)	1	(ILLUST. NO.1)			-2825
NA01-56-39YA	1	(ILLUST. NO.1)			2825-
56-772A NA01-56-772	1	PIPE,DRAIN-RR FENDER			
56-991A NA01-56-971	1	COVER,SERVICE HOLE			
68-6N1 NA01-68-6N1	1	INSULATOR,BALK HEAD PANEL			
70-020 NA01-70-020B	1	PANEL(R),COWL SIDE			
70-10X NA01-70-111C	1	PANEL(R),QUARTER			

2825 NA351*-401320

CAT. AUNA03-04

1994-10

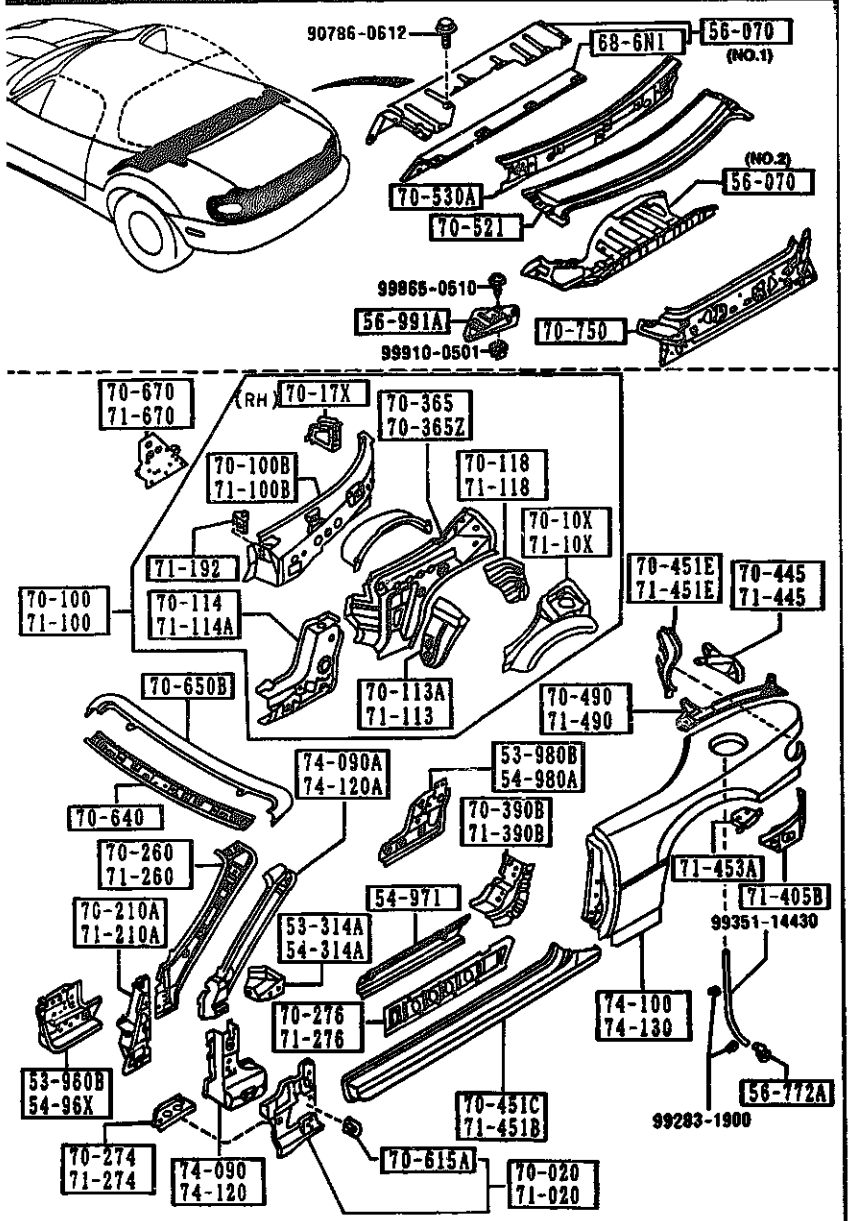

AUNA03

5340 -2 SIDE PANELS

PART NO.	QTY	MODEL/RESTRICTION	MODEL/RESTRICTION	MODEL/RESTRICTION	FROM-TO
70-100		PANEL(R),QUARTER			
NA01-70-100L	1				
70-100B		PANEL(R),INSIDE			
NA01-70-19XB	1				
70-113A		PLATE(R),SEAL			
NA01-70-11Z	1				
70-114		PLATE(R),END			
NA01-70-12XA	1				
70-118		PROTECTOR(R),SPLASH			
NA01-70-15X	1				
70-17X		BRKT,BATT.CLAMP-QTR PANEL			
NA01-70-17XA	1				
70-210A		PILLAR(R),HINGE			
NA01-70-230	1				
70-260		PILLAR(R),FRT.-INNER			
NA01-70-240B	1				
70-274		GUSSET(R),SIDE SILL OUTER			
NA31-70-274	1				
70-276		REINF.(R),SIDE SILL			
NA01-70-275	1				
70-365		REINF.(R),BELT LINE-C.PIL			
NA01-70-116A	1				
70-365Z		REINF.(L),BELT LINE-C.PIL			
NA01-71-116B AN(NA01-71-116C)	1				-3304
NA01-71-116C	1				3304-
70-390B		REINF.(R),STRIKER			
NA01-70-460	1				

3304 NA351*-416556

CAT. AUNA03-04

1994-10

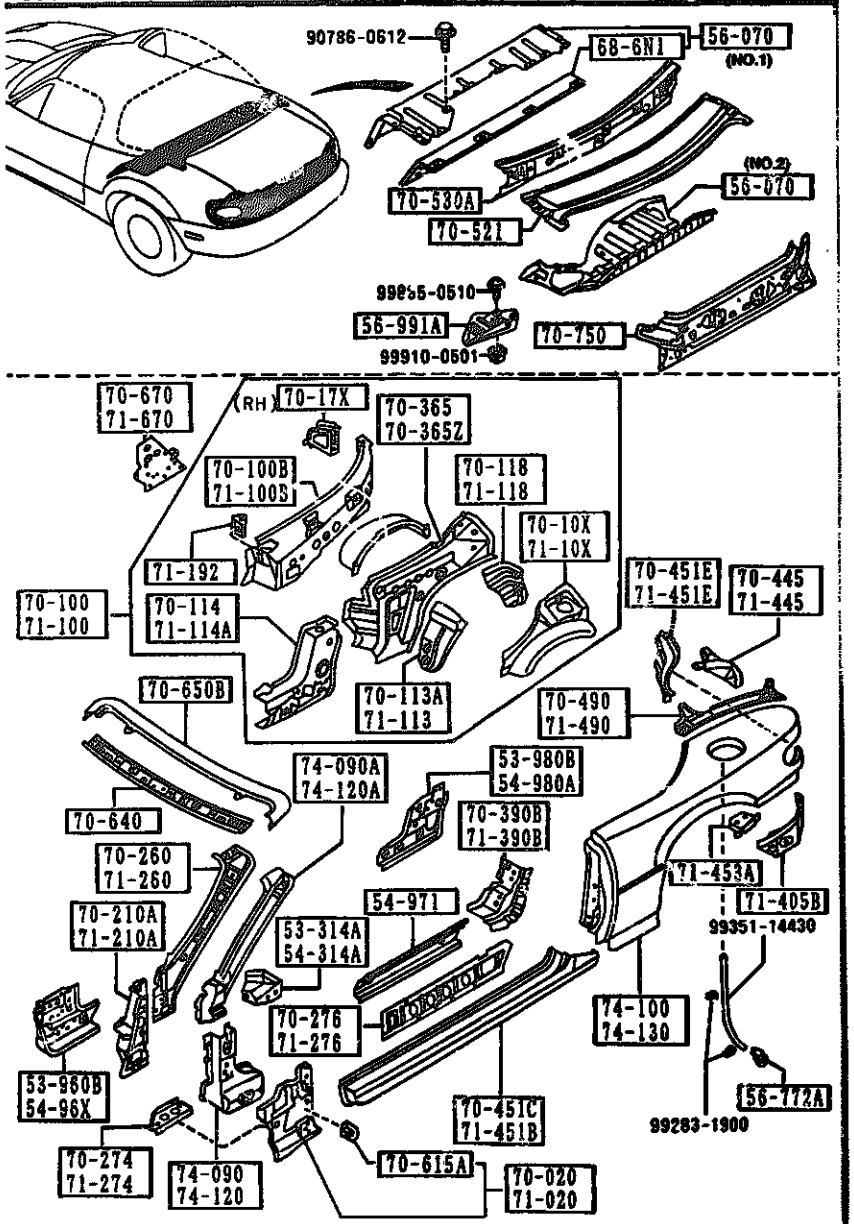

AUNA03

PART NO.	QTY	MODEL/RESTRICTION	MODEL/RESTRICTION	MODEL/RESTRICTION	FROM-TO
70-445 NA01-70-445	1	GUSSET(R),REAR FENDER-RR			
70-451C NA01-70-270B	1	SILL(R),SIDE OUT.			
70-451E NA01-70-J30	1	HOUSING(R),LAMP-RR FENDER			
70-490 NA01-70-440A	1	RAIL(R),RAIN-REAR			
70-521 NA01-70-521A	1	PANEL,REAR DECK			
70-530A NA01-70-530A	1	MEMBER,REAR DECK			
70-615A B092-70-970A	2	BRACKET,FENDER			
70-640 NA01-70-640	1	HEADER,FRONT			
70-650B NA01-70-650	1	HEADER,FRONT-UPPER			
70-670 NA01-70-670	1	PLATE(R),CLOSING-QTR PANEL			
70-750 NA01-70-750G	1	PANEL,REAR END			
71-020 NA01-71-020B	1	PANEL(L),COWL SIDE			
71-10X NA01-71-11XA A (NA01-71-11XB)	2	PANEL(L),QUARTER			-2828
NA01-71-11XB	1				2828-

2828 NA351N-407078

CAT. AUNA03-04

1994-10

5340 SIDE PANELS

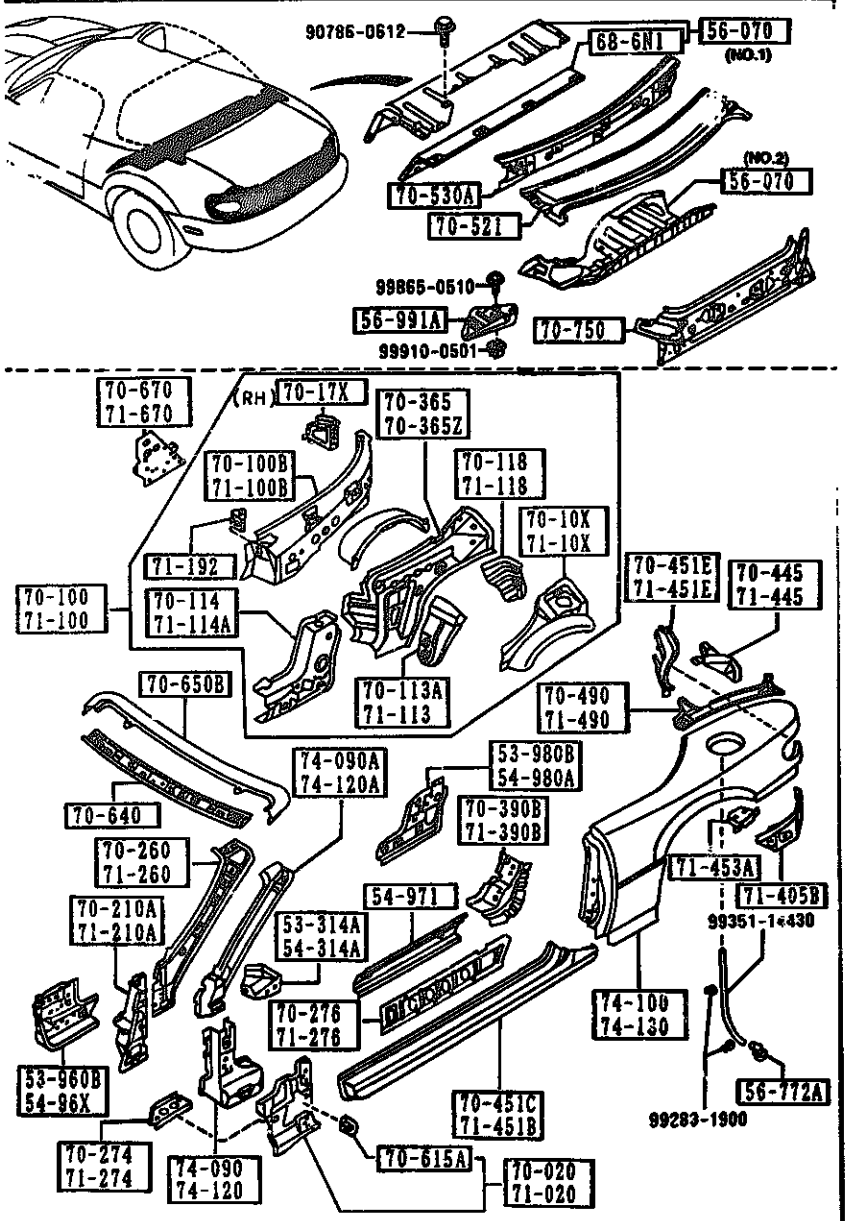

PART NO.	QTY	MODEL/RESTRICTION	MODEL/RESTRICTION	MODEL/RESTRICTION	FROM-TO
71-100		PANEL(L),QUARTER			
NA01-71-100G	1				
71-100B		PANEL(L),INSIDE			
NA01-71-19XB	1				
71-113		PLATE(L),SEAL			
NA01-71-11Z	1				
71-114A		JUNCTION(L),CORNER-O/PANE			
NA01-71-12XA	1				
71-118		PROTECTOR(L),SPLASH			
NA01-71-15XA	1				
71-192		BRKT,CAP-QUARTER PANEL			
NA01-71-192	2				
71-210A		PILLAR(L),HINGE			
NA01-71-230	1				
71-260		PILLAR(L),FRT.-INNER			
NA01-71-240B	1				
71-274		GUSSET(L),SIDE SILL OUTER			
NA01-71-274	1				
71-276		REINF.(L),SIDE SILL			
NA01-71-275	1				
71-390B		REINF.(L),STRIKER			
NA01-71-460	1				
71-405B		PANEL(L),RR FENDER-LOWER			
NA01-71-421	1				
71-445		GUSSET(L),REAR FENDER-RR			
NA01-71-445	1				
71-451B		SILL(L),SIDE OUT.			
NA01-71-270B	1				

AUNA03

CAT. AUNA03-04

1994-10

5340 SIDE PANELS

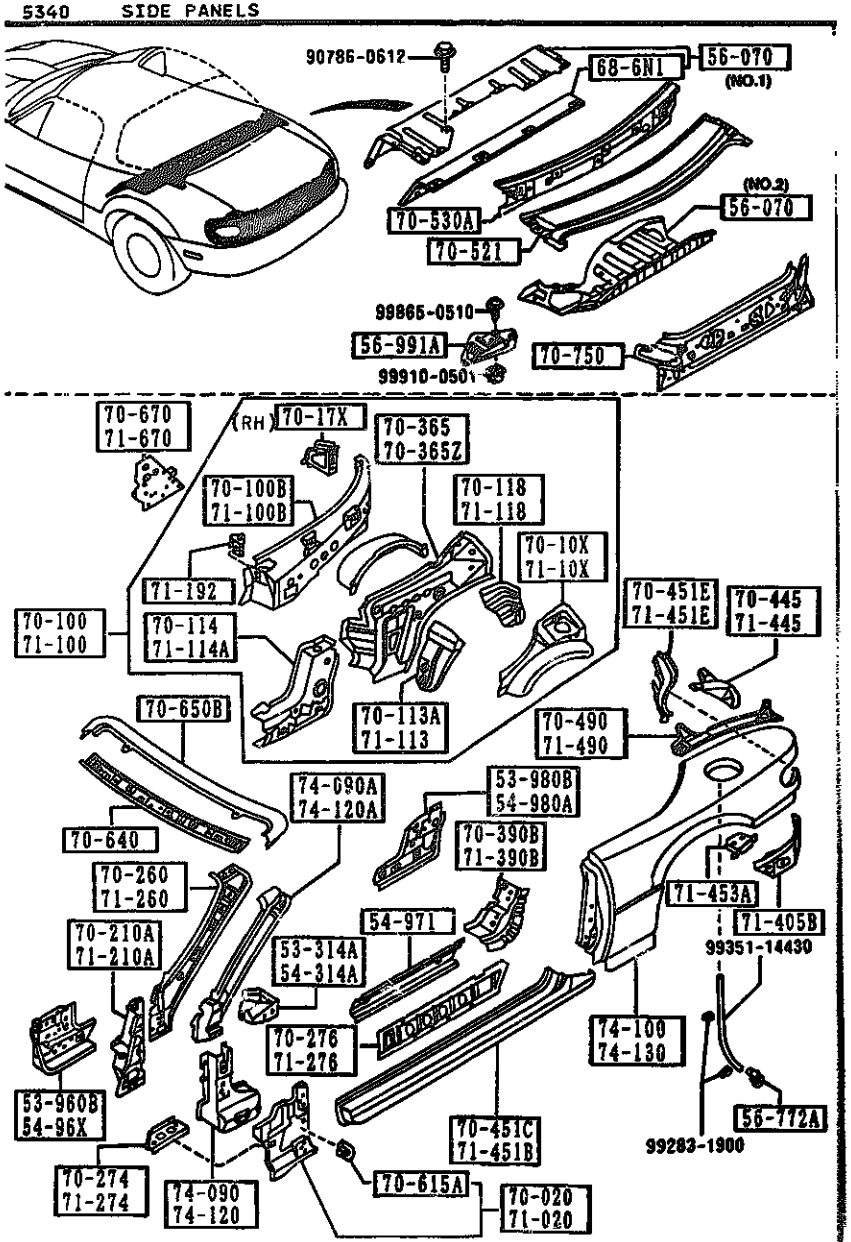

PART NO.	QTY	MODEL/RESTRICTION	MODEL/RESTRICTION	MODEL/RESTRICTION	FROM-TO
71-451E		HOUSING(L),LAMP-RR FENDER			
NA01-71-J30	1				
71-453A		BRKT(L),TRK.BOARD-FENDER			
NA01-71-453	1				
71-490		RAIL(L),RAIN-REAR			
NA01-71-440A	1				
71-670		PLATE(L),CLOSING-QTR PANEL			
NA01-71-670B	1				
74-090		PILLAR(R),HINGE-OUT.			
NA01-70-280B	1				
74-090A		PILLAR(R),FRONT-OUT.			
NA01-70-210	1				
74-100		PANEL(R),FENDER-REAR			
NAY1-70-400B	1				
74-120		PILLAR(L),HINGE-OUT.			
NA01-71-280B	1				
74-120A		PILLAR(L),FRONT-OUT.			
NA01-71-210	1				
74-130		PANEL(L),FENDER-REAR			
NAY1-71-400B	1				

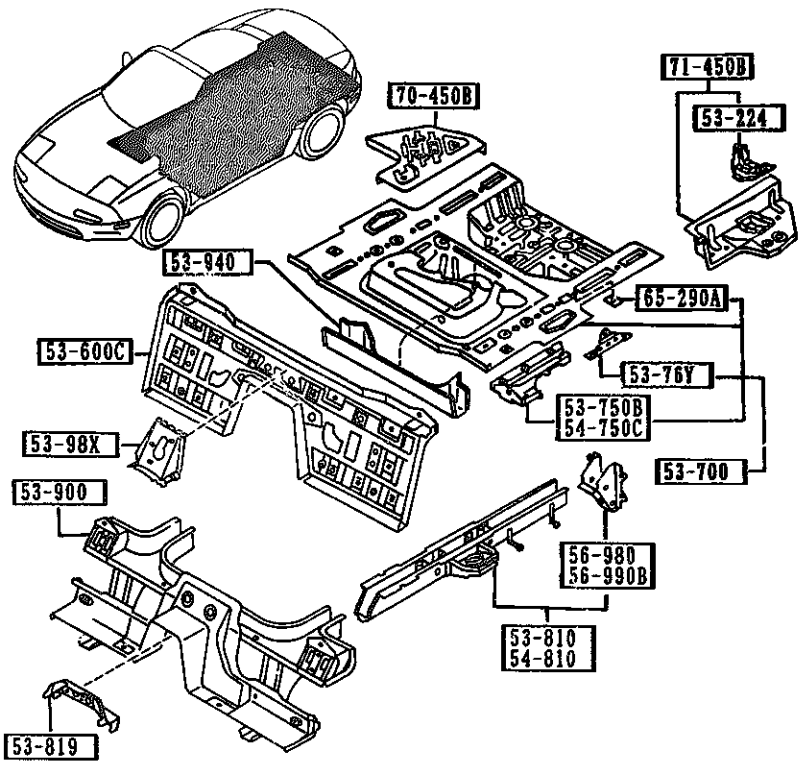

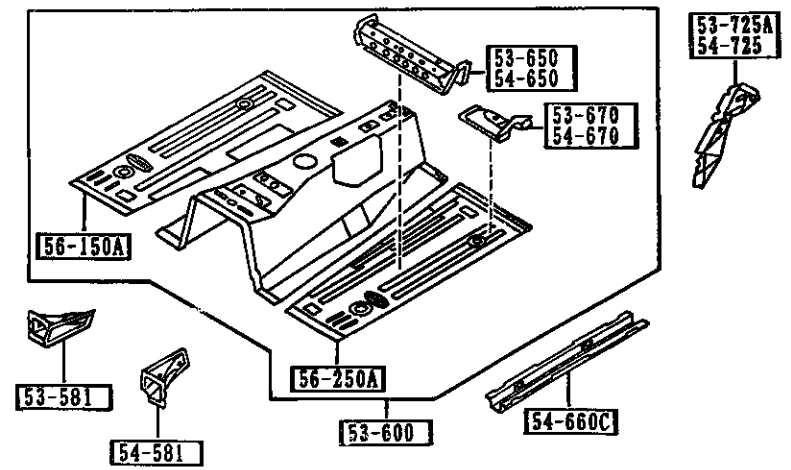

AUNA03

5370 -1 FLOOR PANELS

PART NO.	QTY	MODEL/RESTRICTION	MODEL/RESTRICTION	MODEL/RESTRICTION	FROM-TO
53-224		BRACKET,JACK			
9455-53-750C	1				
53-581		JUNCTION(R),FRT. FLOOR			
NA01-53-482	1				
53-600		PAN,FLOOR-FRONT			
NA01-53-600A	1				
53-600C		PAN,FLOOR-CENTER			
NA01-53-720	1				
53-650		MEMBER NO.2(R),CROSS-FLOOR			
NA01-53-650	1				
53-670		BRKT(R),SEAT-F.FLOOR PAN			
NA01-53-670	1				
53-700		PAN,FLOOR-REAR			
NA01-53-710B	1				
53-725A		GUSSET NO.3(R),C.FLOOR PAN			
NA01-53-725A	1				
53-750B		PLATE(R),SIDE-REAR FLOOR			
NA01-53-750	1				
53-76Y		PLATE,NUT-TRUNK FLOOR PAN			
NA01-53-760	2				
53-810		FRAME(R),REAR SIDE			
NA01-53-810F	1				
53-819		BRACKET,PARKING CABLE-FLOOR			
NA01-53-819	1				
53-900		MEMBER NO.3,CROSS			
NA01-53-900B	1				
53-940		MEMBER NO.4,CROSS			
NA01-53-931	1				

CAT. AUNA03-04

1994-10

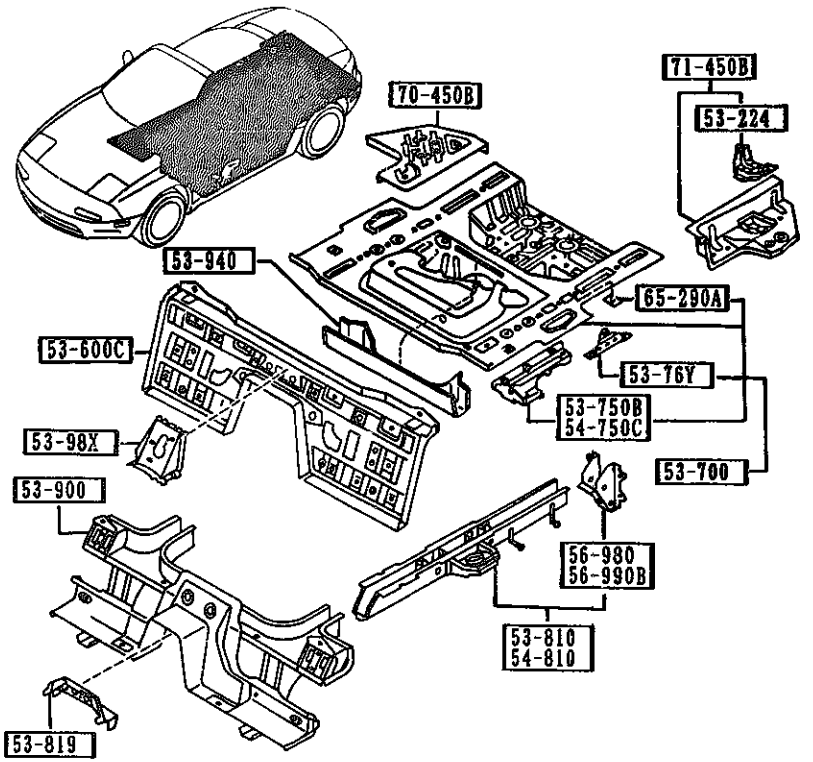

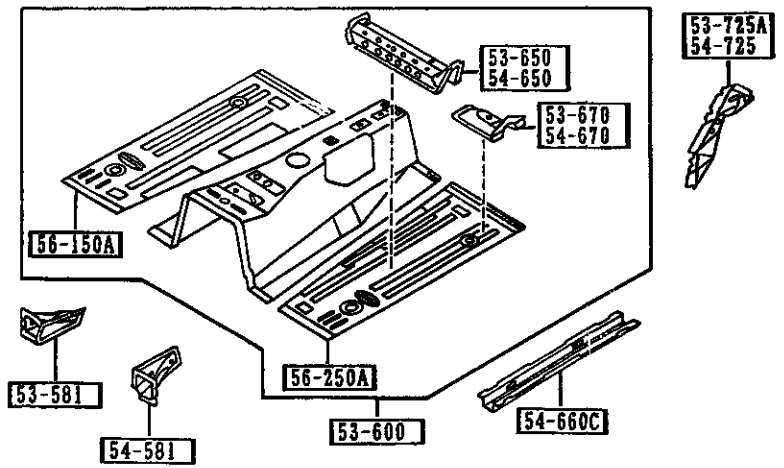

PART NO.	QTY	MODEL/RESTRICTION	MODEL/RESTRICTION	MODEL/RESTRICTION	FROM-TO
53-98X NA01-53-880A	1	GUSSET,FRONT FLOOR PAN			
54-581 NA01-54-482	1	JUNCTION(L),FRT. FLOOR			
54-650 NA01-54-650	1	MEMBER NO.2(L),CROSS-FLOOR			
54-660C NA01-54-660B	2	FRAME,FRONT-FRT FLOOR PAN			
54-670 NA01-54-670	1	BRKT(L),SEAT-F.FLOOR PAN			
54-725 NA01-54-725A	1	GUSSET NO.3(L),C.FLOOR PAN			
54-750C NA01-54-750	1	PLATE(L),SIDE-REAR FLOOR			
54-810 NA01-54-810F	1	FRAME(L),REAR SIDE			
56-150A NA01-53-602	1	PAN(R),FLOOR			
56-250A NA01-54-610	1	PAN(L),FLOOR			
56-980 NA01-53-830C	1	BRKT(R),BUMPER-RR SKIRT			
56-990B NA01-54-830C	1	BRKT(L),BUMPER-RR SKIRT			
65-290A 1353-65-190	1	BRACKET			
70-450B NA01-53-740C	1	PANEL(R),FLOOR SIDE			

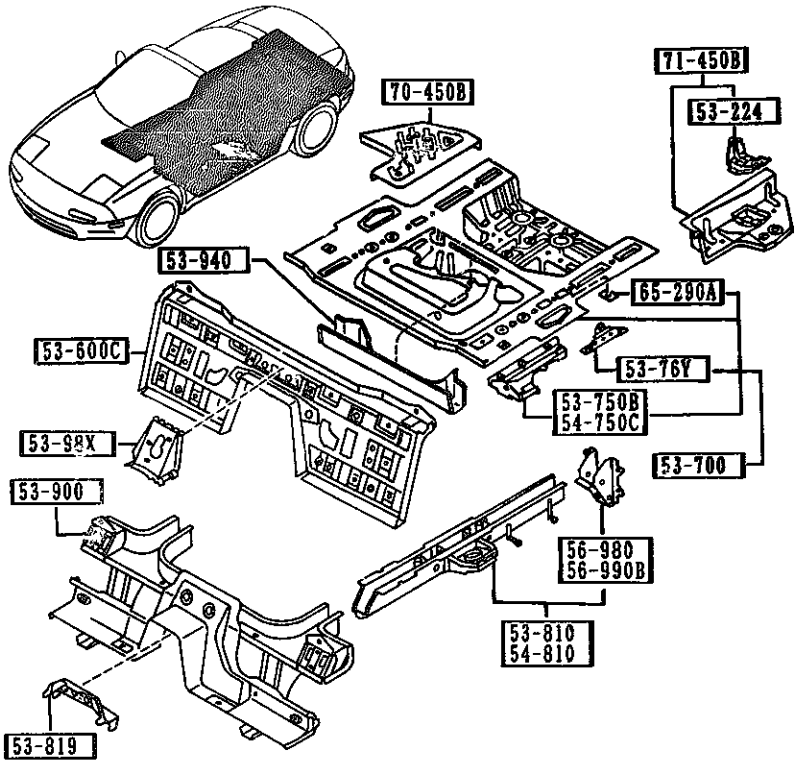

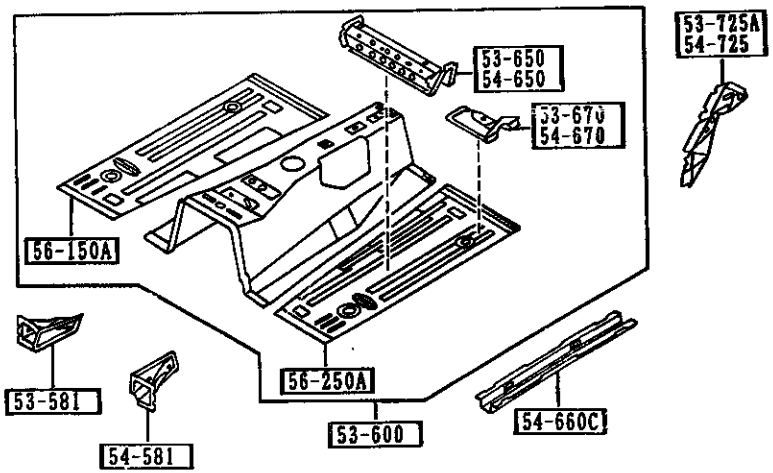

AUNA03

5370 -3 * FLOOR PANELS

PART NO.	QTY	MODEL/RESTRICTION	MODEL/RESTRICTION	MODEL/RESTRICTION	FROM-TO
71-450B		PANEL(L),FLOOR SIDE			
NA01-54-740A	1				

CAT. AUNA03-04

1994-10

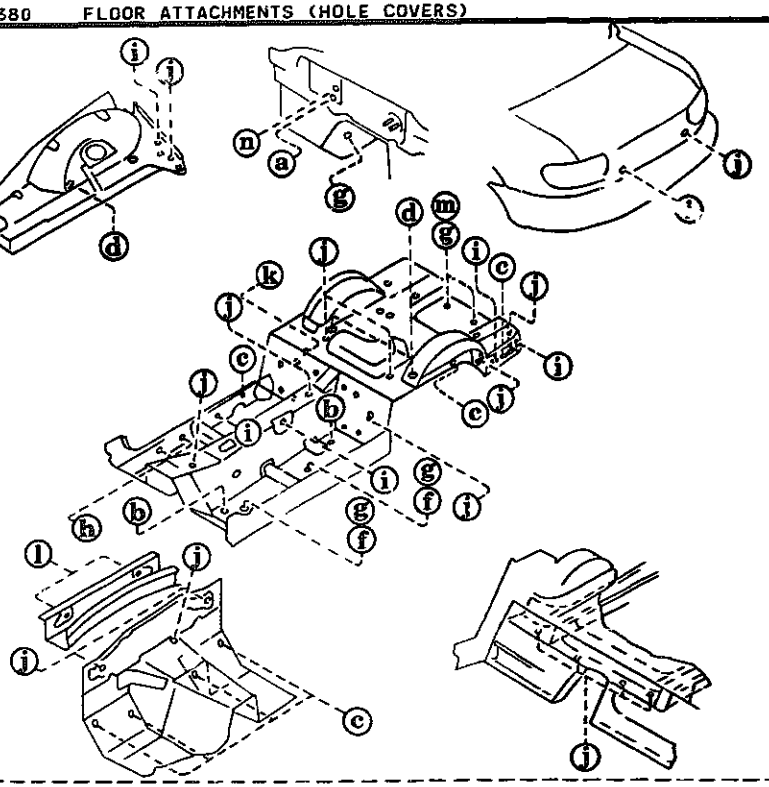

ⓐ 53-134B (HOLE φ 26)
ⓑ 56-051
ⓒ 56-052 (NO.1) (HOLE φ 20.5)
ⓓ 56-052 (NO.2) (HOLE φ20.5)
ⓕ 56-061A (HOLE φ 65)
ⓖ 56-241 (HOLE φ 20)
ⓗ 56-241B (HOLE φ 29)
ⓘ 56-241J
ⓙ 56-242 (HOLE φ 22)
ⓚ 56-615F (HOLE φ40)
ⓛ 56-615M (HOLE φ15)
ⓜ 56-971 (HOLE φ100)
ⓝ 61-031 (HOLE φ36)

AUNA03

PART NO.	QTY	MODEL/RESTRICTION	MODEL/RESTRICTION	MODEL/RESTRICTION	FROM-TO
53-134B 0187-53-134	1	RUBBER,DUST SEAL			
56-051 1011-56-051	4	COVER,HOLE			
56-052 B092-56-052	9	PLUG,DRAIN D=12MM (ILLUST. NO.1)			
FB01-56-056	4	(ILLUST. NO.2) (W/O A.LOCK BRAKE)			
56-061A 8545-56-052	4	COVER,HOLE			
56-241 0118-56-241	7	PLUG,DRAIN			
56-241B B001-56-051	6	PLUG			
56-241J 8477-56-241	9	PLUG,DRAIN			
56-242 0118-56-242B	19	PLUG,DRAIN			
56-615F 0208-56-615	2	PLUG,DRAIN			
56-615M NA01-56-051	2	PLUG,DRAIN			
56-971 8545-56-053	2	COVER,HOLE			
61-031 1708-61-031	1	PLUG,HOLE			

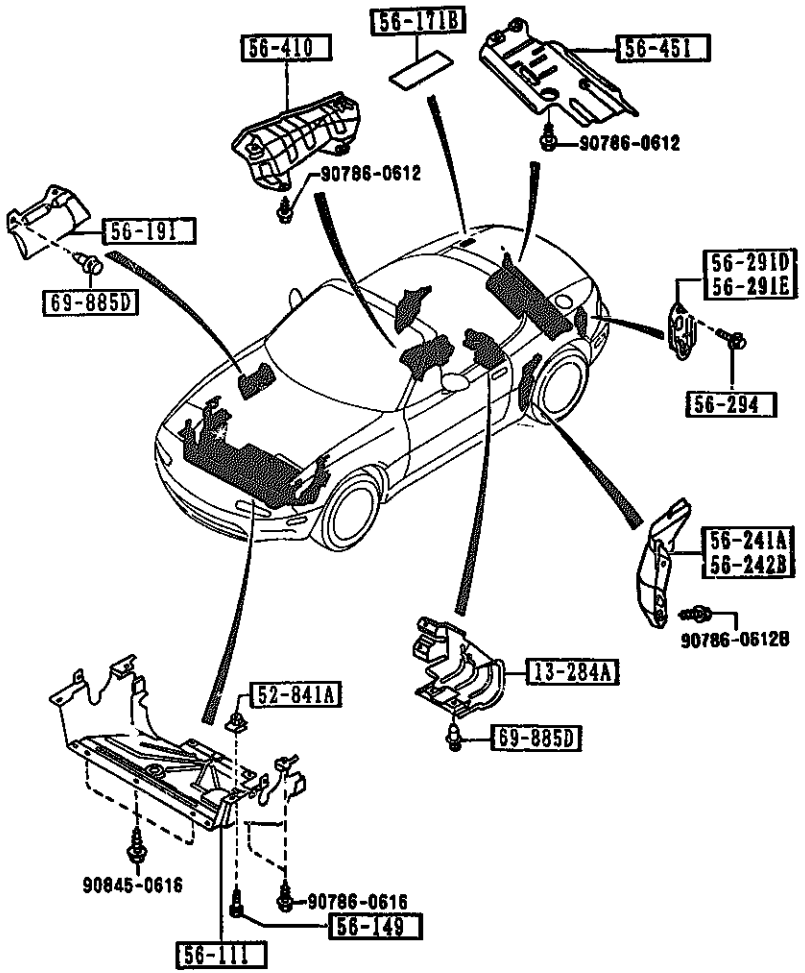

AUNA03

5390 -1 FLOOR ATTACHMENTS

PART NO.	QTY	MODEL/RESTRICTION	MODEL/RESTRICTION	MODEL/RESTRICTION	FROM-TO
13-284A		COVER,FUEL FILTER			
NA01-56-241B	1				
52-841A		NUT,CLIP			
8455-56-135	1				
56-111		COVER,UNDER			
NA01-56-111C A (NA01-56-111D)	1				-3602
*NA01-56-111D	1				3602-
56-149		SCREW,TAPPING-MUD GUARD			
8455-56-149	1				
56-171B		PROTECTOR(R),RR FENDER			
NA01-56-171A	1				
56-191		SHIELD,SPLASH			
NA01-56-112	1				
56-241A		SHIELD(R),SPLASH-REAR			
NA01-56-311A	1				
56-242B		SHIELD(L),SPLASH-REAR			
NA01-56-321A	1				
56-291D		HOOK(R),TIE DOWN			
NA01-56-29XC	1				
56-291E		HOOK(L),TIE DOWN			
NA01-56-290C	1				
56-294		SCREW,TIE DOWN HOOK			
NA01-56-294	4				
56-410		INSULATOR,HEAT-FRONT			
NA01-56-411	1				
56-451		INSULATOR			
NA01-56-451	1				

3602 NA351*-422297

CAT. AUNA03-04

1994-10

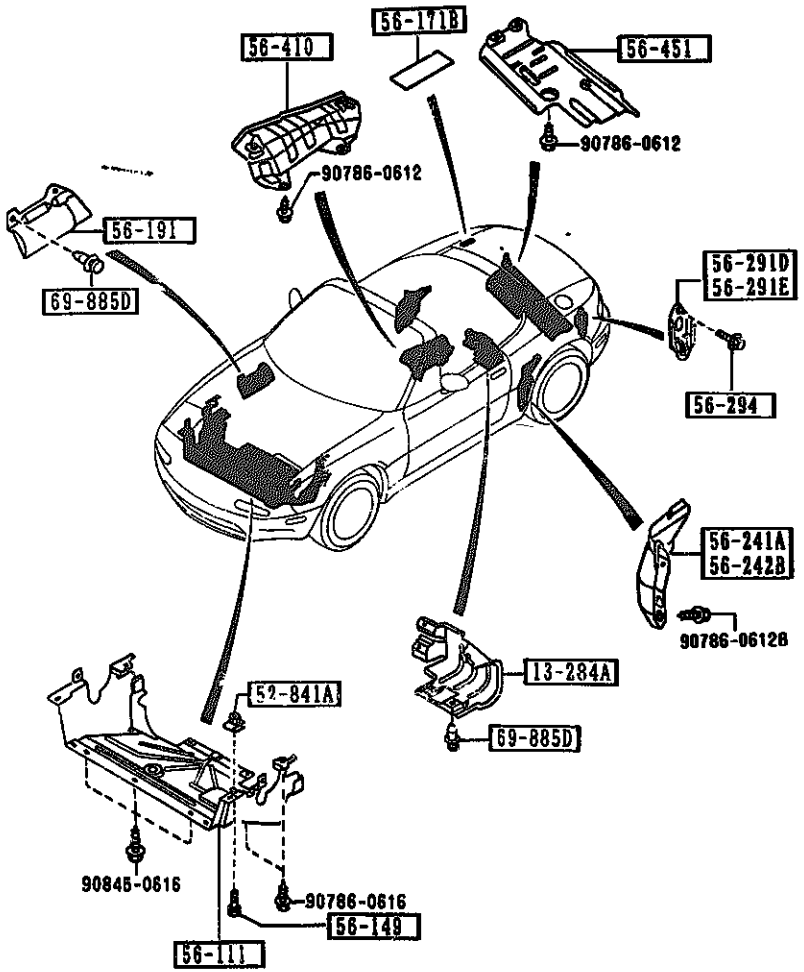

5390 -2 ※ FLOOR ATTACHMENTS

PART NO.	QTY	MODEL/RESTRICTION	MODEL/RESTRICTION	MODEL/RESTRICTION	FROM-TO
69-885D		FASTENER			
NA01-56-145	7				

5500 DASHBOARD EQUIPMENTS

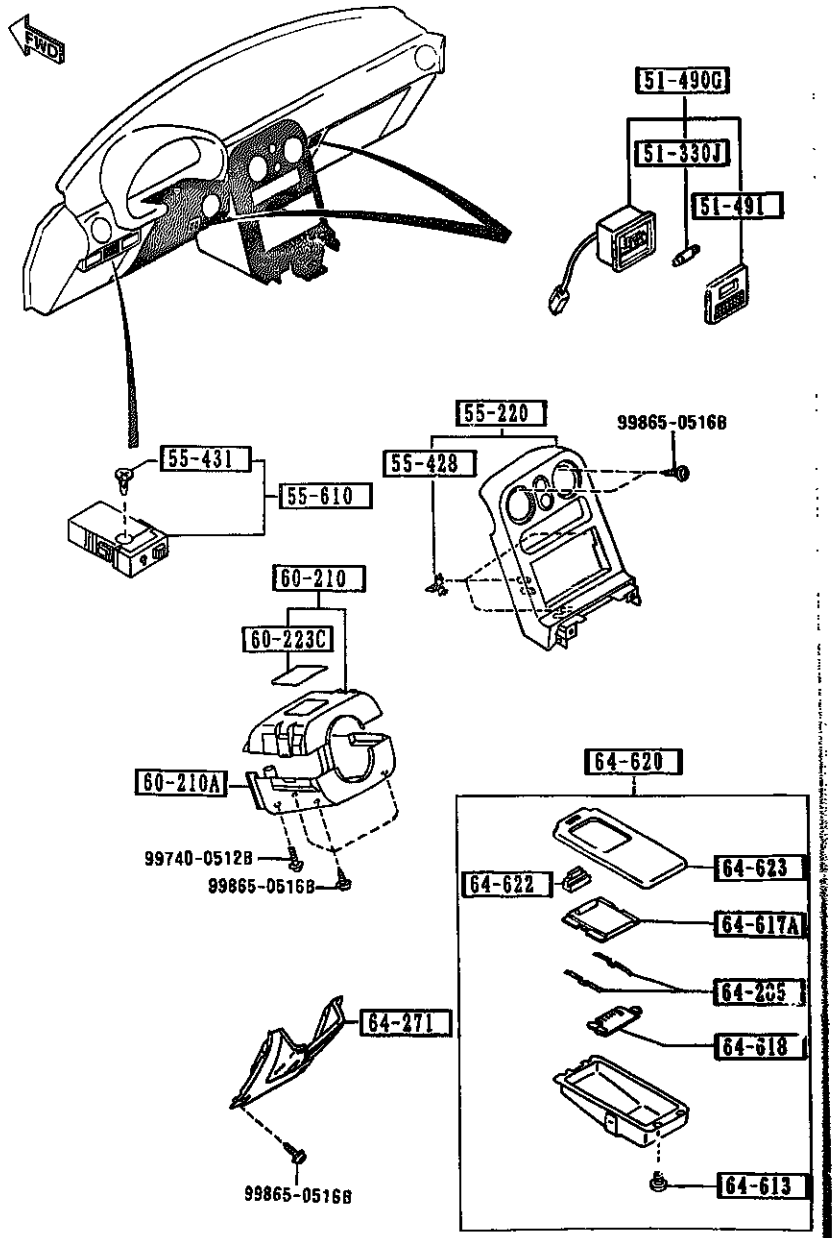

PART NO.	QTY	MODEL/RESTRICTION	MODEL/RESTRICTION	MODEL/RESTRICTION	FROM-TO
51-330J		BULB			
99701-5050	2	12V 5W			
51-490G		LAMP,PERSONAL			
NA01-51-490B	2				
00	INT-	NA0 NA1 NA2 BLACK			
51-491		LENS,PERSONAL LAMP			
H197-51-491A	2				
00	INT-	NA0 NA1 NA2 BLACK			
55-220		PANEL,CENTER			
NA01-55-210B	1				
00	INT-	NA0 NA1 NA2 BLACK			
55-428		SPRING,METER HOOD			
GJ21-55-428	3				
55-431		BULB,RESISTOR			
BR70-55-431	1				
55-610		RESISTOR,PANEL LIGHT			
BR70-55-490	1				
60-210		COVER,COLUMN-UPPER			
NA01-60-220	1				
00	INT-	NA0 NA1 NA2 BLACK			
60-210A		COVER,COLUMN-LOWER			
NA01-60-230A	1				
00	INT-	NA0 NA1 NA2 BLACK			
60-223C		CAP,COLUMN COVER			
NA01-60-223	1				
00	INT-	NA0 NA1 NA2 BLACK			
64-271		PANEL,CENTER-LOWER			
NA01-64-270D	1				
00	INT-	NA0 BLACK			

5500 DASHBOARD EQUIPMENTS

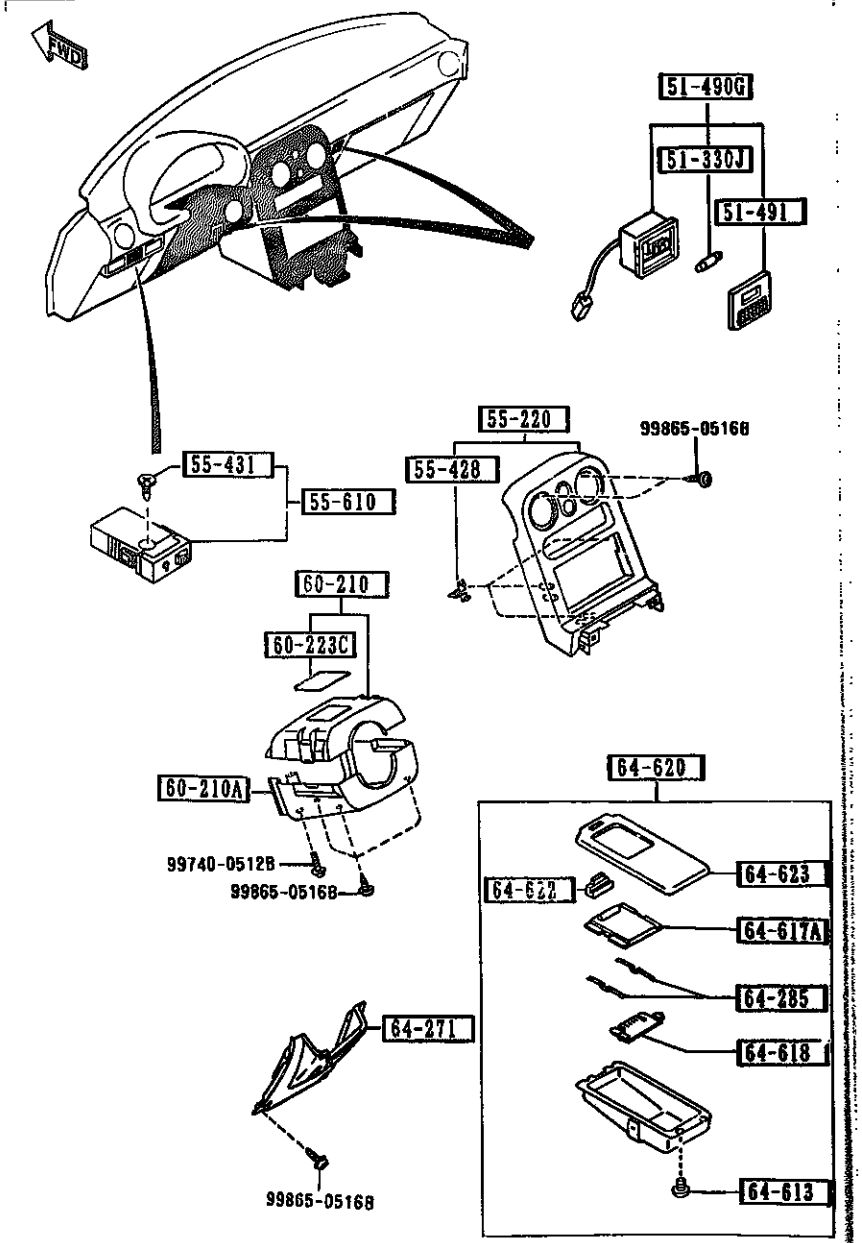

PART NO.	QTY	MODEL/RESTRICTION	MODEL/RESTRICTION	MODEL/RESTRICTION	FROM-TO
CONT'D					
17	INT-	NA2 RED			
88	INT-	NA1 TAN			
64-285		SPRING,ASHTRAY			
NA01-64-612	2				
64-613		SCREW,ASHTRAY			
NA01-64-613	4				
64-617A		LID,ASHTRAY			
NA01-64-617	1				
00	INT-	NA0 NA1 NA2 BLACK			
64-618		PLATE,ASHTRAY			
NA01-64-618	1				
64-620		TRAY,ASH			
NA01-64-6108	1				
00	INT-	NA0 NA1 NA2 BLACK			
64-622		LIGHT,PLATE-ASHTRAY			
NA01-64-622	1				
64-623		CASE'OUT',ASHTRAY			
NA01-64-623	1				
00	INT-	NA0 NA1 NA2 BLACK			

5520 -1 * METER HOOD

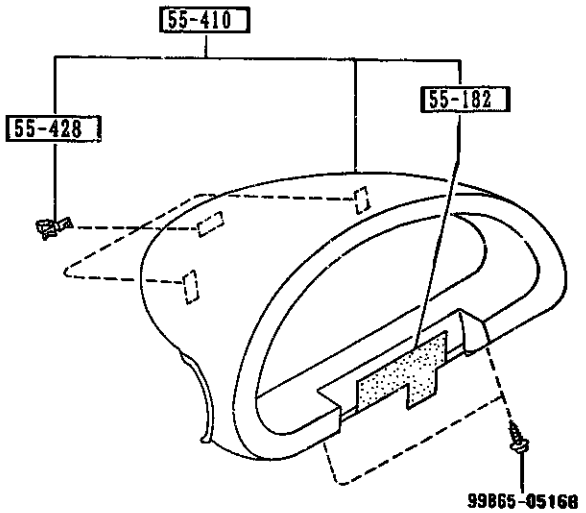

PART NO.	QTY	MODEL/RESTRICTION	MODEL/RESTRICTION	MODEL/RESTRICTION	FROM-TO
55-182		RUBBER,BLIND			
NA01-55-182	1				
55-410		HOOD,METER			
NA01-55-4208	1	BASE, (INSTRUMENT PANEL-BLACK)			
00	INT-	NA0 NA1 NA2 BLACK			
NA02-55-420	1	OPT, RICO-20TH-ANV., SPECIAL-ED, (INSTRUMENT PANEL-TAN)			
00	INT-	NA1 NA2 BLACK			
55-428		SPRING,METER HOOD			
GJ21-55-428	3				

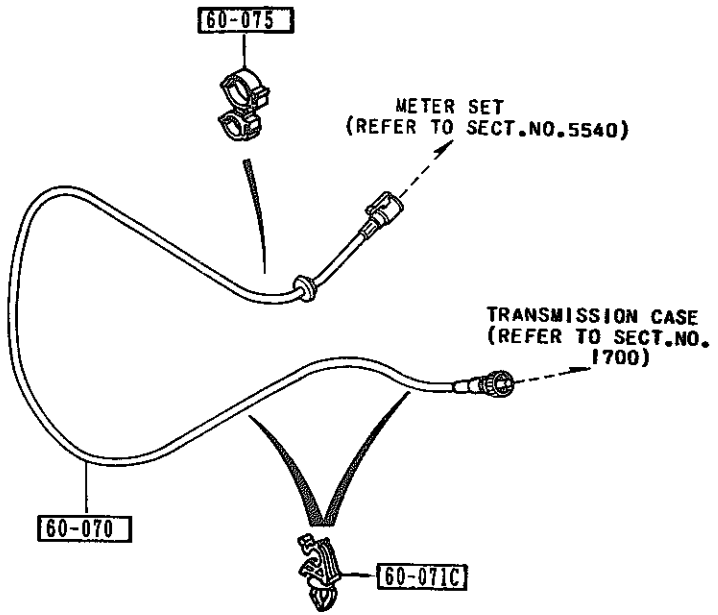

5530 -1 * SPEEDOMETER CABLE

PART NO.	QTY	MODEL/RESTRICTION	MODEL/RESTRICTION	MODEL/RESTRICTION	FROM-TO
60-070		CABLE,SPEEDOMETER			
NA01-60-070B	1	(MT)			
NA03-60-070A	1	(AT)			
60-071C		CLIP			
NA03-60-071	2				
60-075		CLIP'A',SPEEDOMETER CABLE			
NA01-60-075	1				

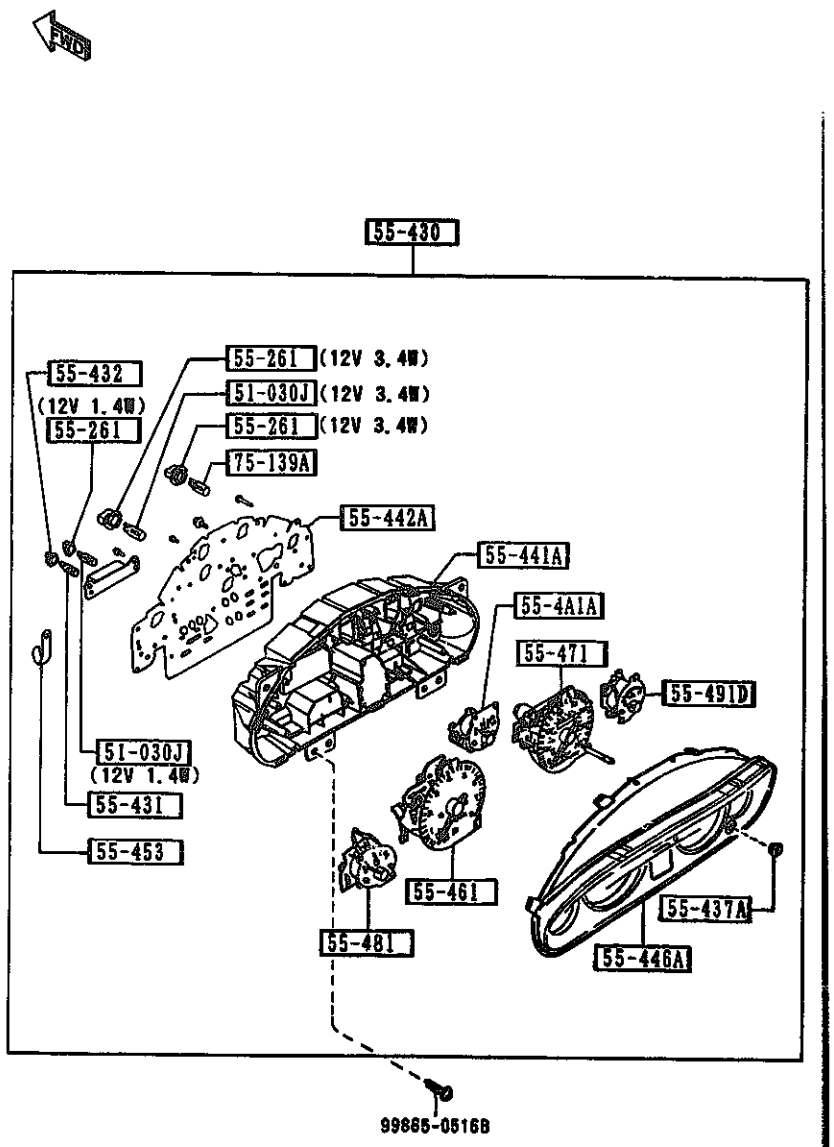

AUNA03

PART NO.	QTY	MODEL/RESTRICTION	MODEL/RESTRICTION	MODEL/RESTRICTION	FROM-TO
51-030J		BULB			
3625-75-139	5	12V 1.4W,FOR WARNING ((MT))(W/O A.LOCK BRAKE))			
3625-75-139	6	12V 1.4W,FOR WARNING ((AT))(W/O A.LOCK BRAKE))			
3625-75-139	7	12V 1.4W,FOR WARNING ((MT))(A.LOCK BRAKE))			
3625-75-139	8	12V 1.4W,FOR WARNING ((AT))(A.LOCK BRAKE))			
99701-6030	3	12V 3.4W			
55-261		SOCKET			
1316-55-261	7	12V 3.4W			
8548-55-261	5	12V 1.4W BLACK ((MT))(W/O A.LOCK BRAKE))			
8548-55-261	6	12V 1.4W BLACK ((AT))(W/O A.LOCK BRAKE))			
8548-55-261	7	12V 1.4W BLACK ((MT))(A.LOCK BRAKE))			
8548-55-261	8	12V 1.4W BLACK ((AT))(A.LOCK BRAKE))			
55-4A1A		METER,OIL PRESSURE			
NA01-55-4A1	1				
55-430		METER SET			
NA01-55-430E	1	((MT))(W/O A.LOCK BRAKE))			
NA03-55-430D	1	((AT))(W/O A.LOCK BRAKE))			
NA23-55-430B	1	((MT))(A.LOCK BRAKE))			
NA25-55-430B	1	((AT))(A.LOCK BRAKE))			
55-431		BULB,RESISTOR			
NA01-55-431	1				

5540 METER COMPONENTS

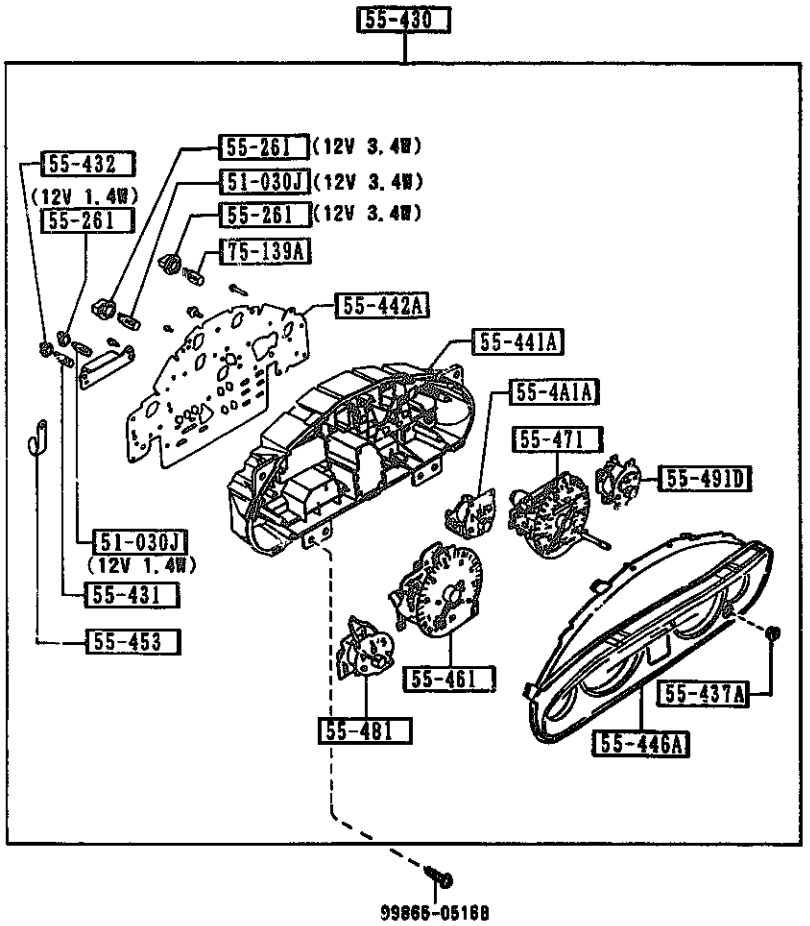

AUNA03

5540 -2 * METER COMPONENTS

PART NO.	QTY	MODEL/RESTRICTION	MODEL/RESTRICTION	MODEL/RESTRICTION	FROM-TO
55-432		SOCKET,METER SET			
NA01-55-432	1				
55-437A		GROMMET,KNOB-METER SET			
NA01-55-437	1				
55-441A		CASE,METER			
NA01-55-441C	1				
55-442A		PLATE,PRINT			
NA01-55-442C	1	((MT)>(W/O A.LOCK BRAKE))			
NA03-55-442C	1	((AT)>(W/O A.LOCK BRAKE))			
NA23-55-442A	1	((MT)>(A.LOCK BRAKE))			
NA25-55-442A	1	((AT)>(A.LOCK BRAKE))			
55-446A		PLATE,WINDOW			
NA01-55-446B	1				
55-453		CLAMP			
N007-55-467	1				
55-461		TACHOMETER			
NA01-55-461A	1	(MT)			
NA03-55-461A	1	(AT)			
55-471		SPEEDOMETER			
NA01-55-471B	1				
55-481		METER,FUEL			
NA01-55-481	1				
55-491D		METER,THERMO			
NA01-55-491	1				
75-139A		BULB			
B491-55-431	4				

CAT. AUNA03-04

1994-10

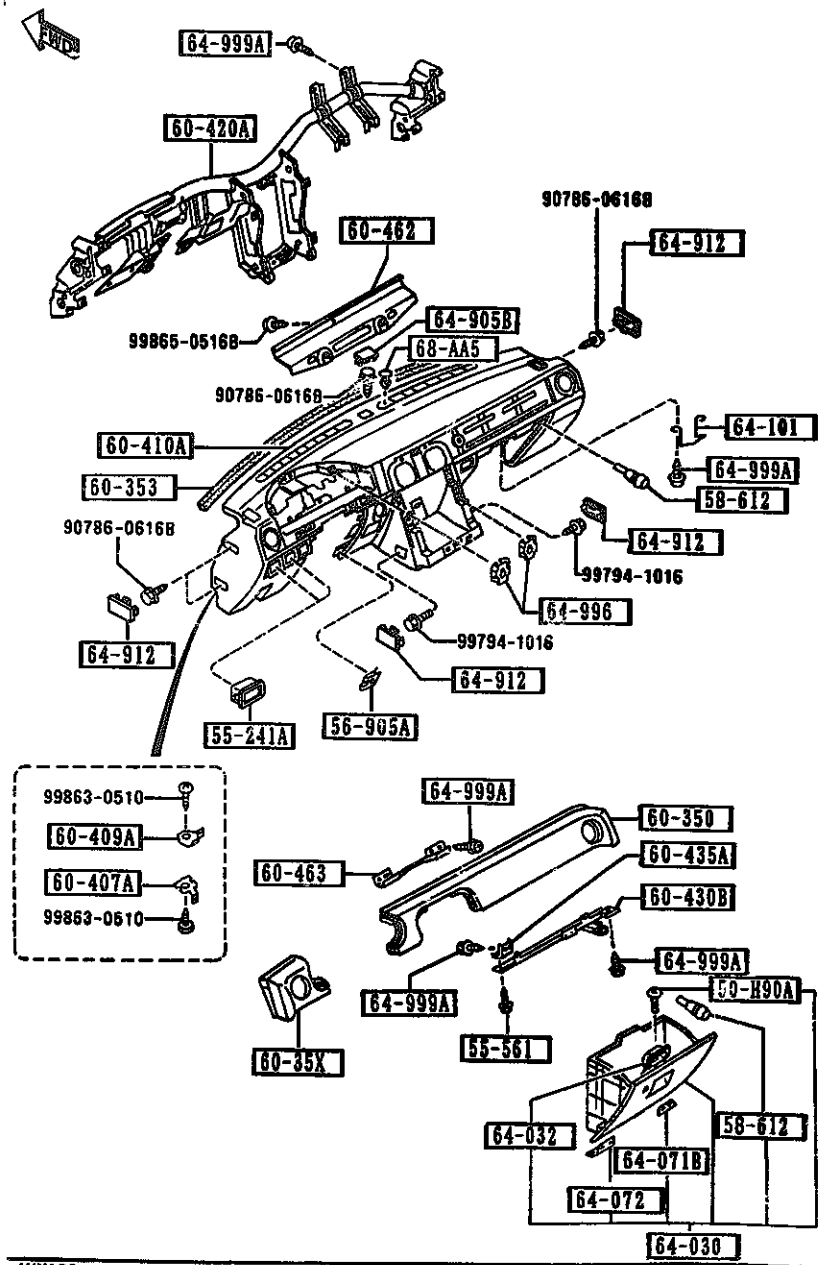

AUNA03

PART NO.	QTY	MODEL/RESTRICTION	MODEL/RESTRICTION	MODEL/RESTRICTION	FROM-TO
50-H90A		SCREW,MOULD-FRT WIND			
LA01-50-H90	1				
55-241A		BOX,INSTRUMENT PANEL			
NA01-55-241A	2				
00	INT-	NA0 NA1 NA2 BLACK			
55-561		BOLT,INST. PANEL			
B455-55-561	1				
56-905A		NUT,SPRING			
B092-60-408	4				
58-612		CUSHION,RUBBER			
B092-64-046	3				
60-35X		PAD,INSTRUMENT PANEL			
NA01-60-35X	1				
00	INT-	NA0 BLACK			
17	INT-	NA2 RED			
88	INT-	NA1 TAN			
60-350		PAD,CRASH			
NA01-60-350	1				
00	INT-	NA0 BLACK			
17	INT-	NA2 RED			
88	INT-	NA1 TAN			
60-353		RUBBER,URETHNE			
×NA01-60-353A	1				
60-407A		SPRING,NO.1			
NA01-60-407	2				
60-409A		SPRING,NO.2			
NA01-60-409	2				
60-410A		PANEL,INSTRUMENT			
NA01-60-401D	1	BASE, (BLACK)			

CAT. AUNA03-04

1994-10

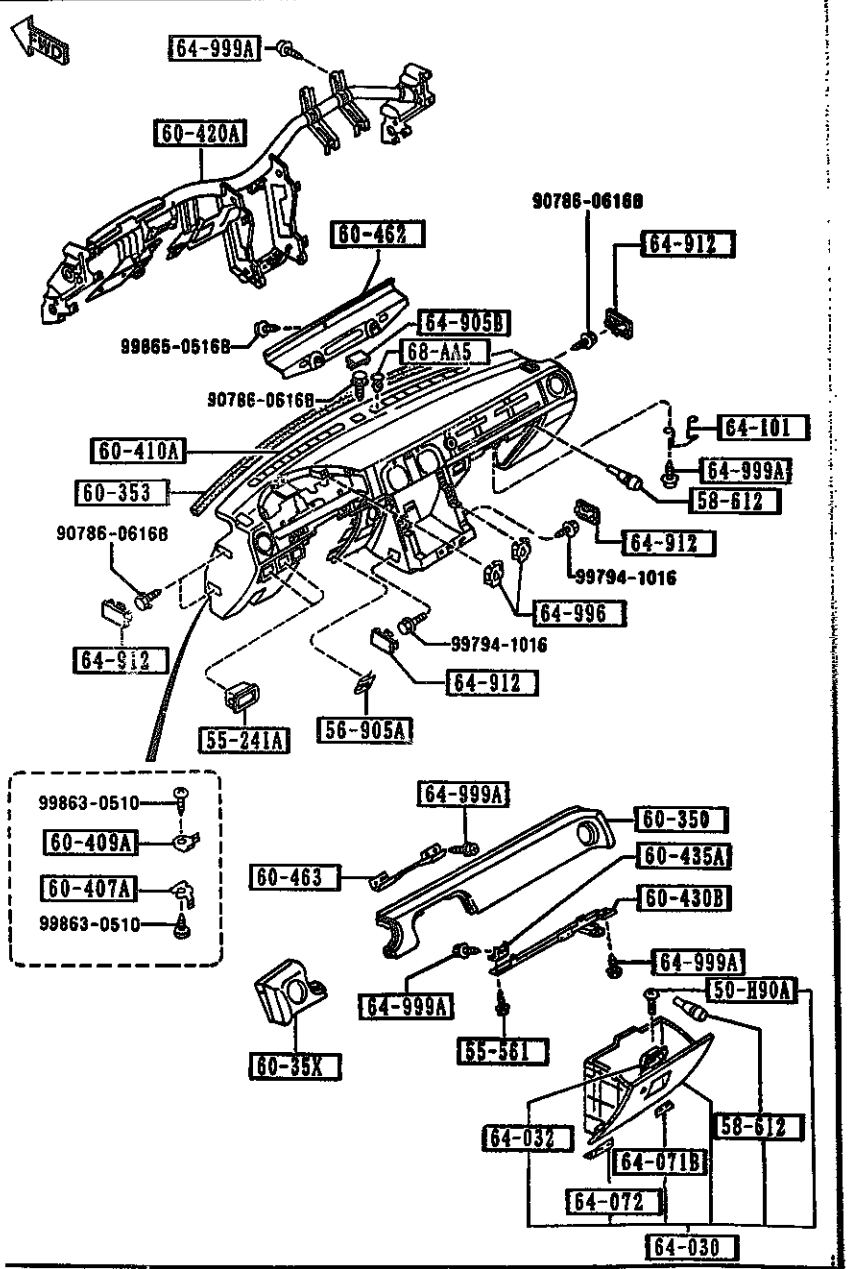

AUNA03

PART NO.	QTY	MODEL/RESTRICTION	MODEL/RESTRICTION	MODEL/RESTRICTION	FROM-TO
CONT'D					
00	INT-	NA0 BLACK			
NA02-60-401	1	OPT, RICO-20TH-ANV., SPECIAL-ED, (TAN)			
17	INT-	NA2 BLACK/RED			
88	INT-	NA1 BLACK/TAN			
60-420A		FRAME,INST.PANEL			
NA52-60-420 AN(NA52-60-420A)	1				-2901
NA52-60-420A	1				2901-
60-430B		MEMBER(R),INST. PANEL			
NA01-60-430C AN(NA01-60-430D)	1				-2901
NA01-60-430D	1				2901-
60-435A		BRACKET,MEMBER			
NA01-60-435	1				
60-462		BRACKET,INST. PANEL			
NA01-60-462A	1				
60-463		BRACKET,CRASH PAD			
NA01-60-463	1				
64-030		BOX,GLOVE			
NA01-64-030E	1				
00	INT-	NA0 BLACK			
17	INT-	NA2 RED			
88	INT-	NA1 TAN			
64-032		COVER,BOX			
NA01-64-032C	1				
00	INT-	NA0 BLACK			
17	INT-	NA2 RED			
88	INT-	NA1 TAN			
64-071B		HINGE(R),GLOVE LID			
NA01-64-03X	1				

2901 NA351M-401942

CAT. AUNA03-04

1994-10

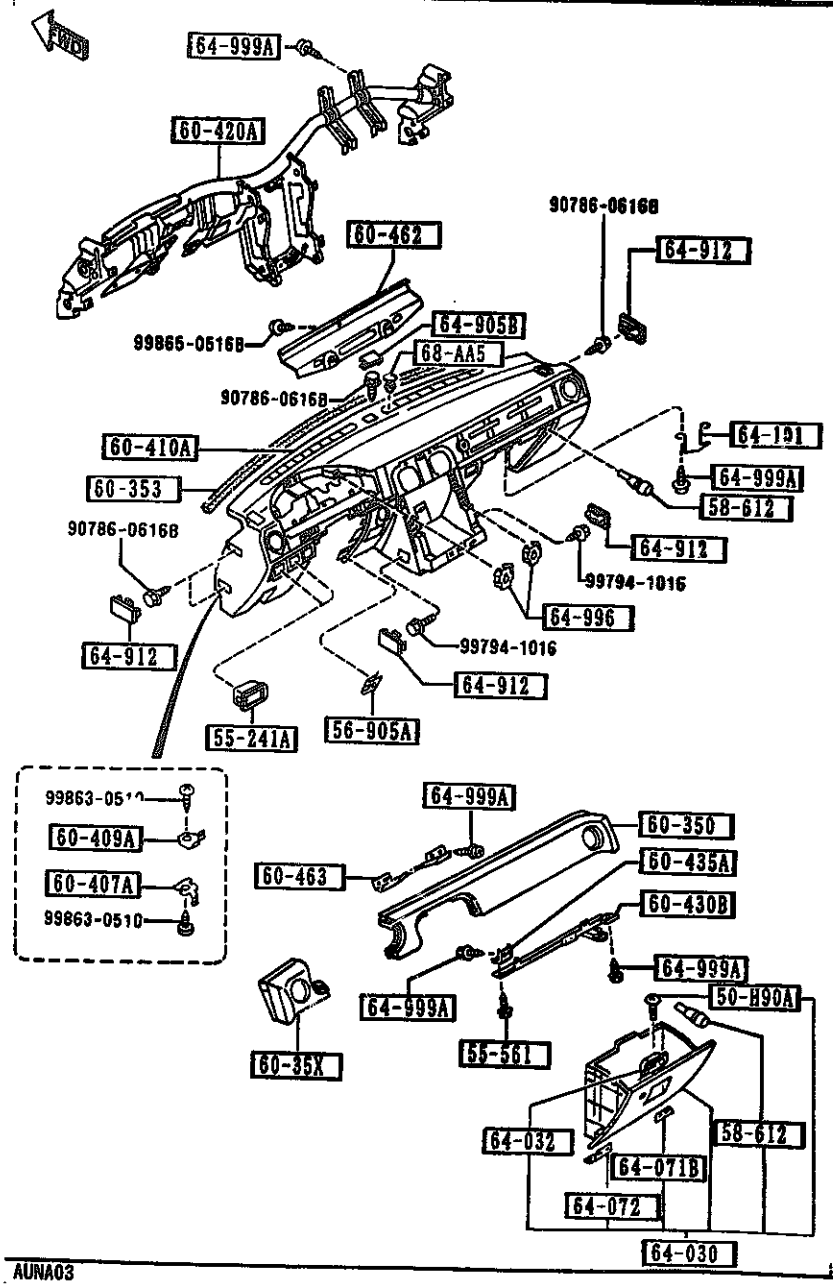

PART NO.	QTY	MODEL/RESTRICTION	MODEL/RESTRICTION	MODEL/RESTRICTION	FROM-TO
64-072		HINGE(L),GLOVE LID			
NA01-64-03Y	1				
64-101		STRIKER			
NA01-64-101	1				
64-905B		COVER,HOLE-(C)			
NA01-64-905	1	BASE, (INSTRUMENT PANEL-BLACK)			
00	INT-	NA0 NA1 NA2 BLACK			
N002-64-905	1	OPT, RICO-20TH-ANV., SPECIAL-ED, (INSTRUMENT PANEL-TAN)			
00	INT-	NA1 NA2 BLACK			
64-912		COVER,SIDE			
NA01-64-912	6				
00	INT-	NA0 BLACK			
17	INT-	NA2 RED			
88	INT-	NA1 TAN			
64-996		NUT,EXPANSION			
GJ21-64-996	8				
64-999A		SCREW,TAPPING			
W201-64-999	25				
68-AA5		FASTENER,DOOR TRIM			
W201-68-AA5A	4				
00	INT-	NA0 NA1 NA2 BLACK			

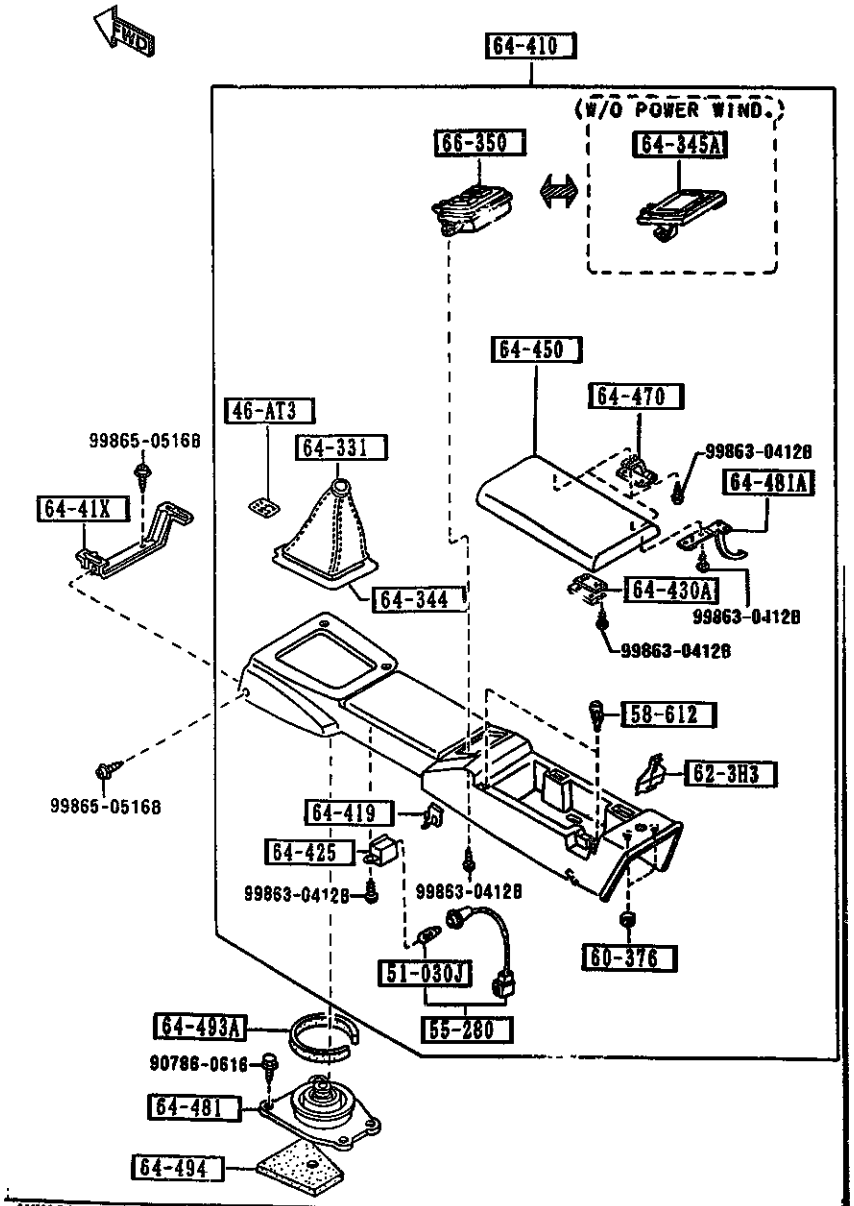

AUNA03

PART NO.	QTY	MODEL/RESTRICTION	MODEL/RESTRICTION	MODEL/RESTRICTION	FROM-TO
46-AT3		LABEL,CHANGE			
N002-46-AT3	1	OPT, (WOOD) (MT)			
51-030J		BULB			
3625-75-139	1	12V 1.4W,FOR WARNING (MT)			
55-280		BULB & SOCKET			
NA01-55-280	1	(MT)			
NA06-55-280	1	(AT)			
58-612		CUSHION,RUBBER			
B092-64-046	2				
60-376		NUT,TOP-CRASH PAD			
B092-60-376	2				
62-3H3		COVER,LEVER-OPENER			
NA01-64-426	1				
64-331		BOOT,CHANGE			
NA01-64-331	1	(MT)			
00	INT-	NA0 NA1 NA2 BLACK			
64-344		PLATE,BACK-BOOTS RING			
NA01-64-344B	1	(MT)			
64-345A		BOX,COIN-CONSOLE			
NA01-64-437	1	BASE, (W/O POWER WIND.)			
00	INT-	NA0 NA1 NA2 BLACK			
64-41X		BRACKET,REAR CONSOLE			
NA01-64-416	1				
64-410		CONSOLE,REAR			
NA01-64-410D	1	(W/O CHANGE LABEL,W/O P.WIND.) (MT)			
00	INT-	NA0 NA1 NA2 BLACK			

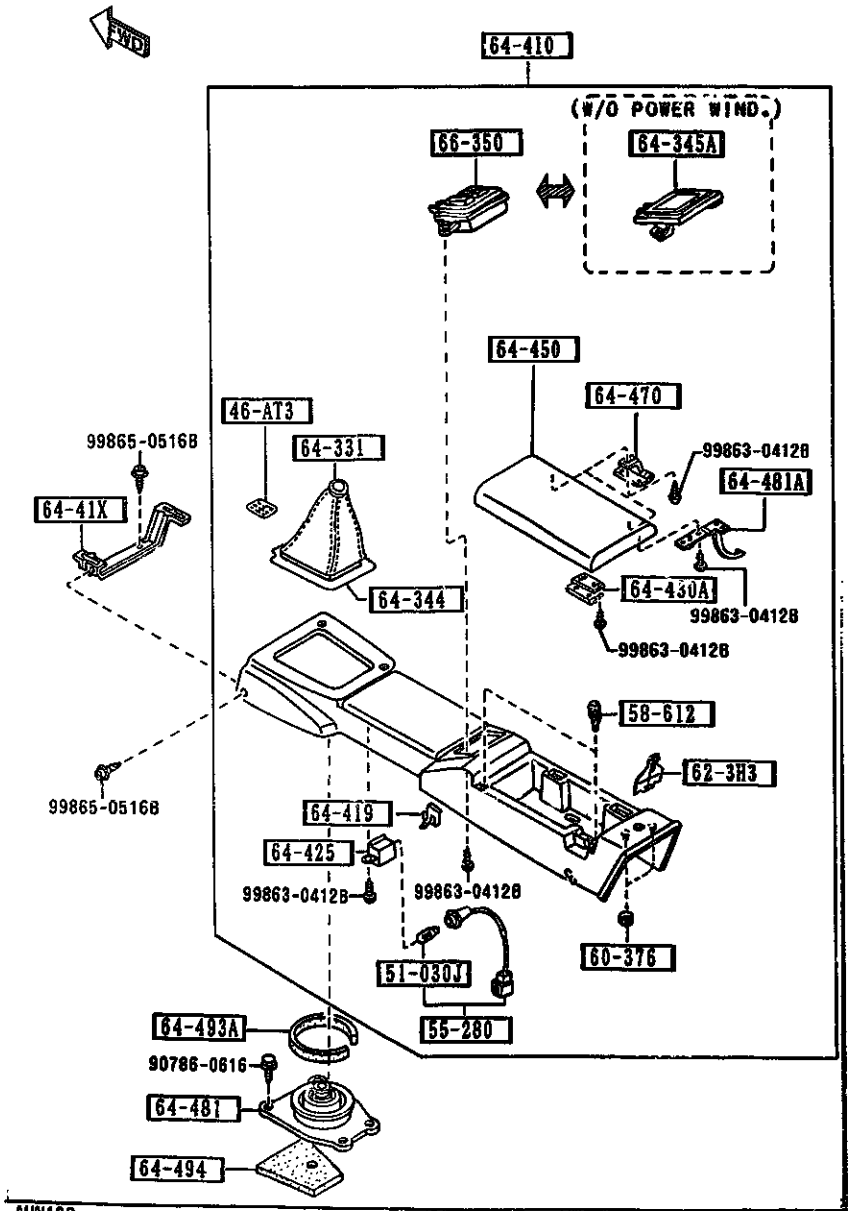

AUNA03

PART NO.	QTY	MODEL/RESTRICTION	MODEL/RESTRICTION	MODEL/RESTRICTION	FROM-TO
CONT'D					
NA02-64-410D	1	(W/O CHANGE LABEL,W/P.WIND.) (MT)			
00 INT-		NA0 NA1 NA2 BLACK			
NA03-64-410C	1	(W/O CHANGE LABEL,W/O P.WIND.) (AT)			
00 INT-		NA0 NA1 NA2 BLACK			
NA06-64-410D	1	(W/O CHANGE LABEL,W/P.WIND.) (AT)			
00 INT-		NA0 NA1 NA2 BLACK			
N007-64-410B	1	(W/CHANGE LABEL,W/O P.WIND.) (MT)			
00 INT-		NA0 NA1 NA2 BLACK			
N008-64-410B	1	(W/CHANGE LABEL,W/P.WIND.) (MT)			
00 INT-		NA0 NA1 NA2 BLACK			
64-419		CLIP,HARNESS-HAND BRAKE			
H260-64-419	1	PKG-B, RICO-20TH-ANV (W/POWER WIND.)			
64-425		CASE,LAMP			
NA01-64-414	1				
64-430A		LOCK,CONSOLE-REAR			
FB01-64-430	1				
64-450		LID,CONSOLE			
NA01-64-45[illegible]	1				
00 INT-		NA0 NA1 NA2 BLACK			
64-470		HINGE			
NA01-64-45XA	2				
00 INT-		NA0 NA1 NA2 BLACK			
64-481		INSULATOR NO.1,CHANGE			
NA01-64-481A	1	(MT)			

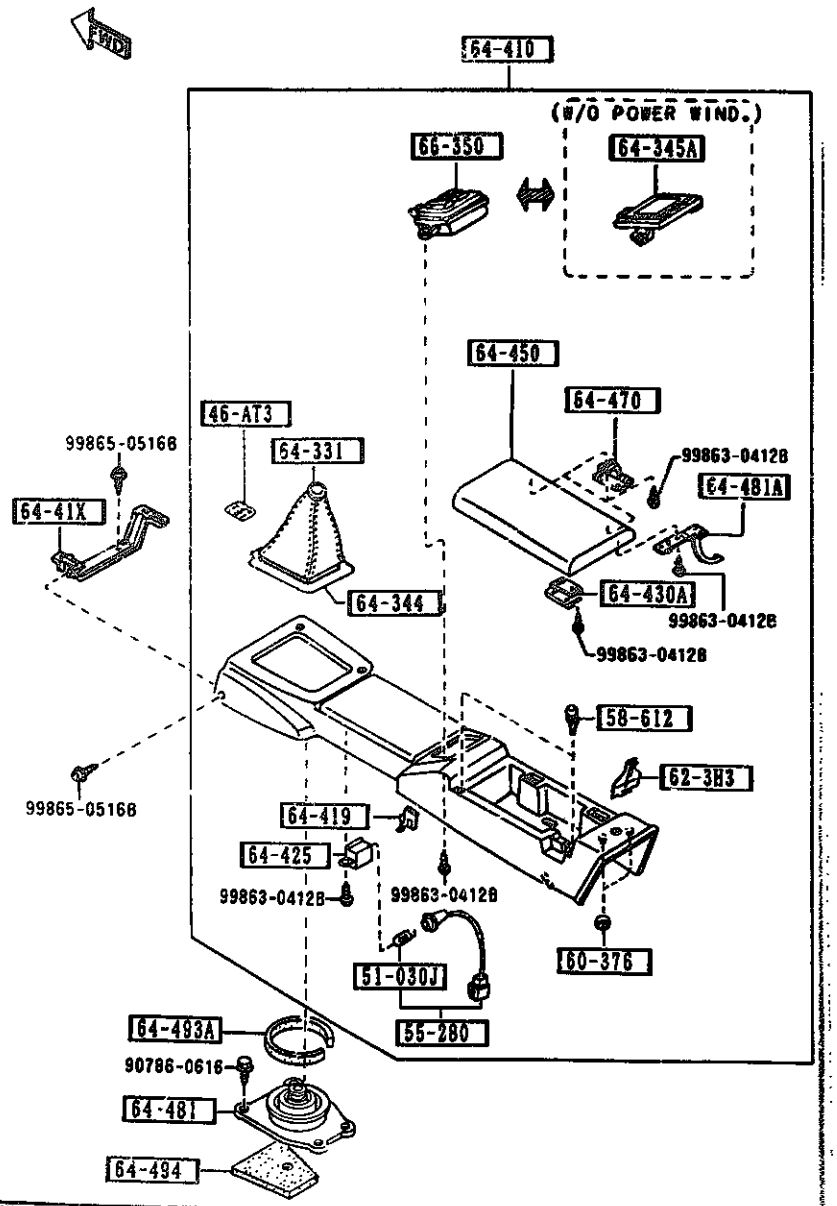

AUNA03

5570 -3 * CONSOLE

PART NO.	QTY	MODEL/RESTRICTION	MODEL/RESTRICTION	MODEL/RESTRICTION	FROM-TO
64-481A		STOPPER,CONSOLE LID			
NA01-64-452	1				
00	INT-	NA0 NA1 NA2 BLACK			
64-493A		PACK,SILENT			
H001-64-493	1	(MT)			
64-494		PAD,CHANGE BOOT			
FB01-64-495	1	(MT)			
66-350		SWITCH,POWER WINDOW			
NA01-66-350A	1	PKG-B, RICO-20TH-ANV (W/POWER WIND.) (MT)			
00	INT-	NA0 NA1 NA2 BLACK			
NA03-66-350	1	PKG-B, (W/POWER WIND.) (AT)			
00	INT-	NA0 NA1 NA2 BLACK			

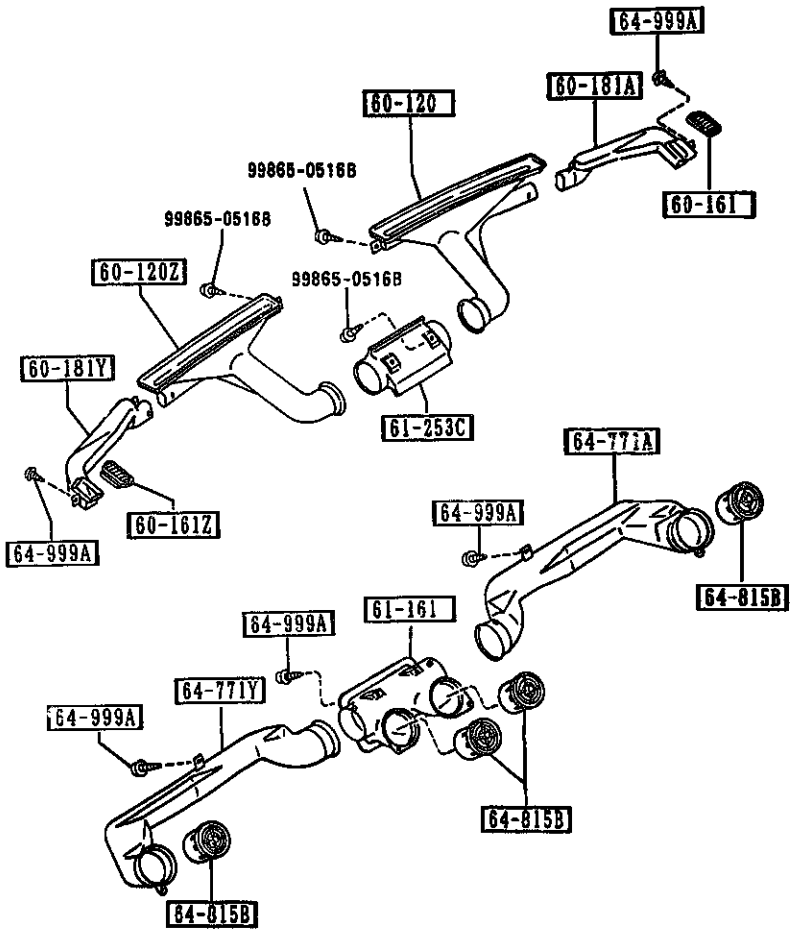

PART NO.	QTY	MODEL/RESTRICTION	MODEL/RESTRICTION	MODEL/RESTRICTION	FROM-TO
60-120		NOZZLE(R),DEFROSTER			
NA01-60-121	1				
60-120Z		NOZZLE(L),DEFROSTER			
NA01-60-141	1				
60-161		GRILLE(R),DEMISTER			
NA01-60-161	1	BASE, (INSTRUMENT PANEL-BLACK)			
00	INT-	NA0 NA1 NA2 BLACK			
N002-60-161	1	OPT, RICO-20TH-ANV., SPECIAL-ED, (INSTRUMENT PANEL-TAN)			
00	INT-	NA1 NA2 BLACK			
60-161Z		GRILLE(L),DEMISTER			
NA01-60-171	1	BASE, (INSTRUMENT PANEL-BLACK)			
00	INT-	NA0 NA1 NA2 BLACK			
N002-60-171	1	OPT, RICO-20TH-ANV., SPECIAL-ED, (INSTRUMENT PANEL-TAN)			
00	INT-	NA1 NA2 BLACK			
60-181A		DUCT(R),SIDE DEMIST.			
NA01-60-183	1				
60-181Y		DUCT(L),SIDE DEMIST.			
NA01-60-193	1				
61-161		DUCT,CENTER			
NA01-61-161A	1				
61-253C		HOSE(C),DEFROSTER			
NA01-61-253	1				
64-771A		DUCT NO.1(R)			
NA01-64-741	1				

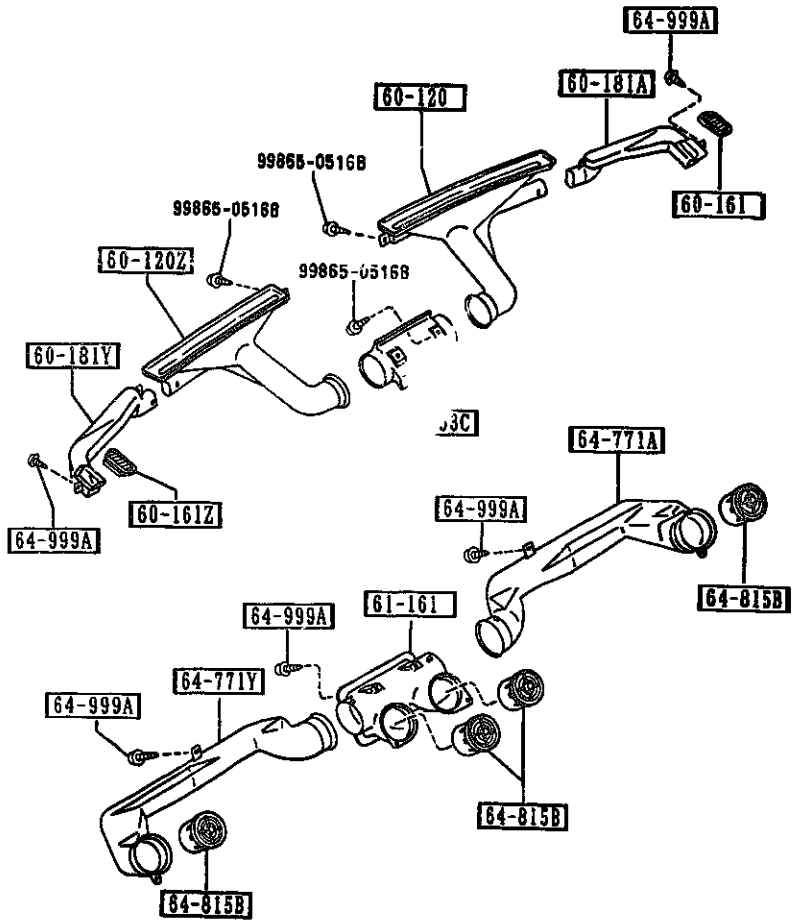

PART NO.	QTY	MODEL/RESTRICTION	MODEL/RESTRICTION	MODEL/RESTRICTION	FROM-TO
64-771Y		DUCT NO.1(L)			
NA01-64-841	1				
64-8158		LOUVER,VENTILATOR			
N001-64-81X	4				
00	INT-	NA0 NA1 NA2 BLACK			
64-999A		SCREW,TAPPING			
W201-64-999	11				

SEAT TYPES / GRADES / SPECIFICATIONS	NAN3 STD	NAN3 STC	NAN3 STE
	OPT. SPECIAL-ED.	PKG-C. SPECIAL-ED.	OPT
SEAT TRIMS	LEATHER	LEATHER	CLOTH
	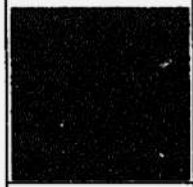	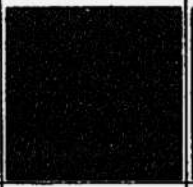	
			
BODY SONIC	×	–	×
HEAD REST SPEAKER	×	×	×

NAN3 STB	NAN3 STA
PKG-A	BASE
CLOTH	CLOTH
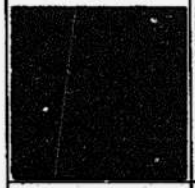	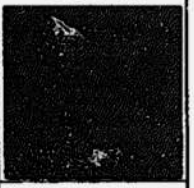
	
–	–
×	–

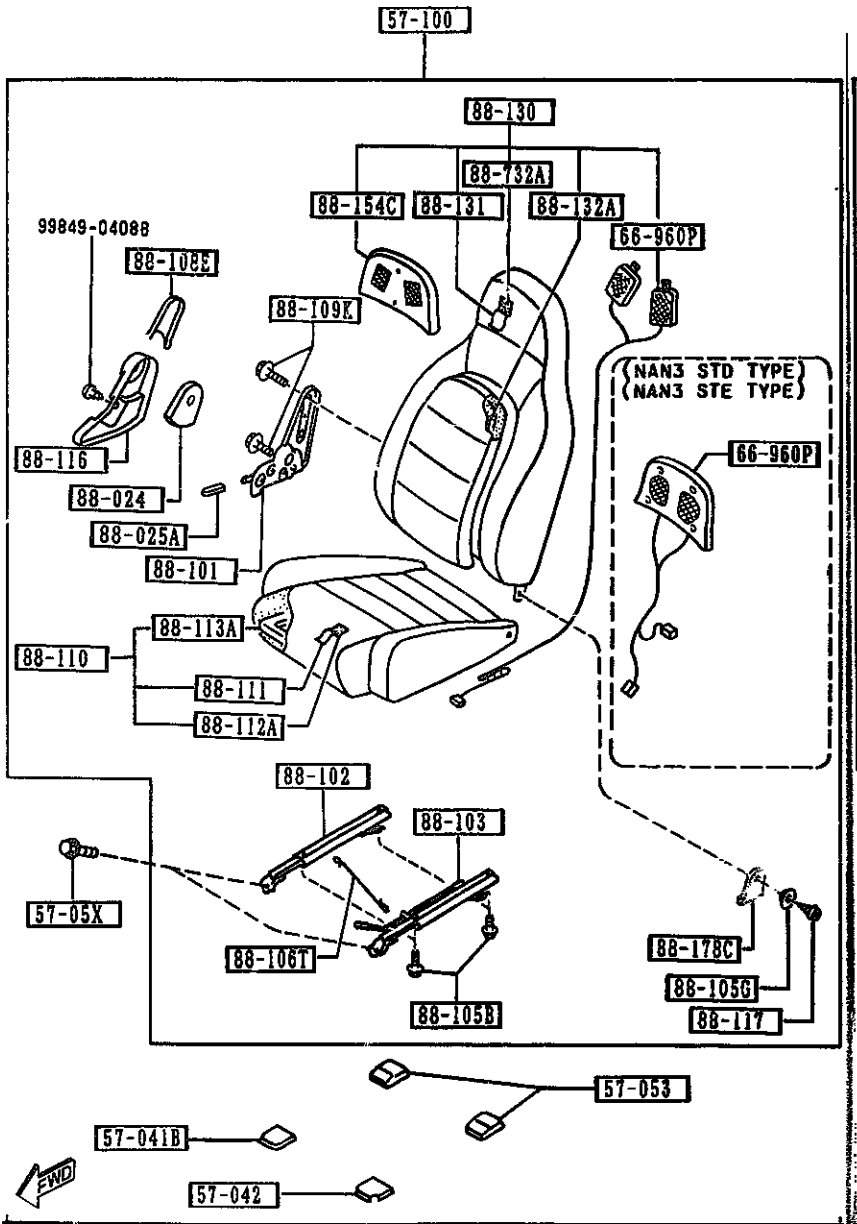
57-100
88-130
88-732A
88-154C
88-131
88-132A
66-960P
99849-04088
88-108E
88-109K
88-116
88-024
88-025A
88-101
88-113A
88-110
88-111
88-112A
(NAN3 STD TYPE)
(NAN3 STE TYPE)
66-960P
88-102
88-103
57-05X
88-106T
88-105B
88-178C
88-105G
88-117
57-053
57-041B
57-042
FWD
AUNA03
(CONT'D)

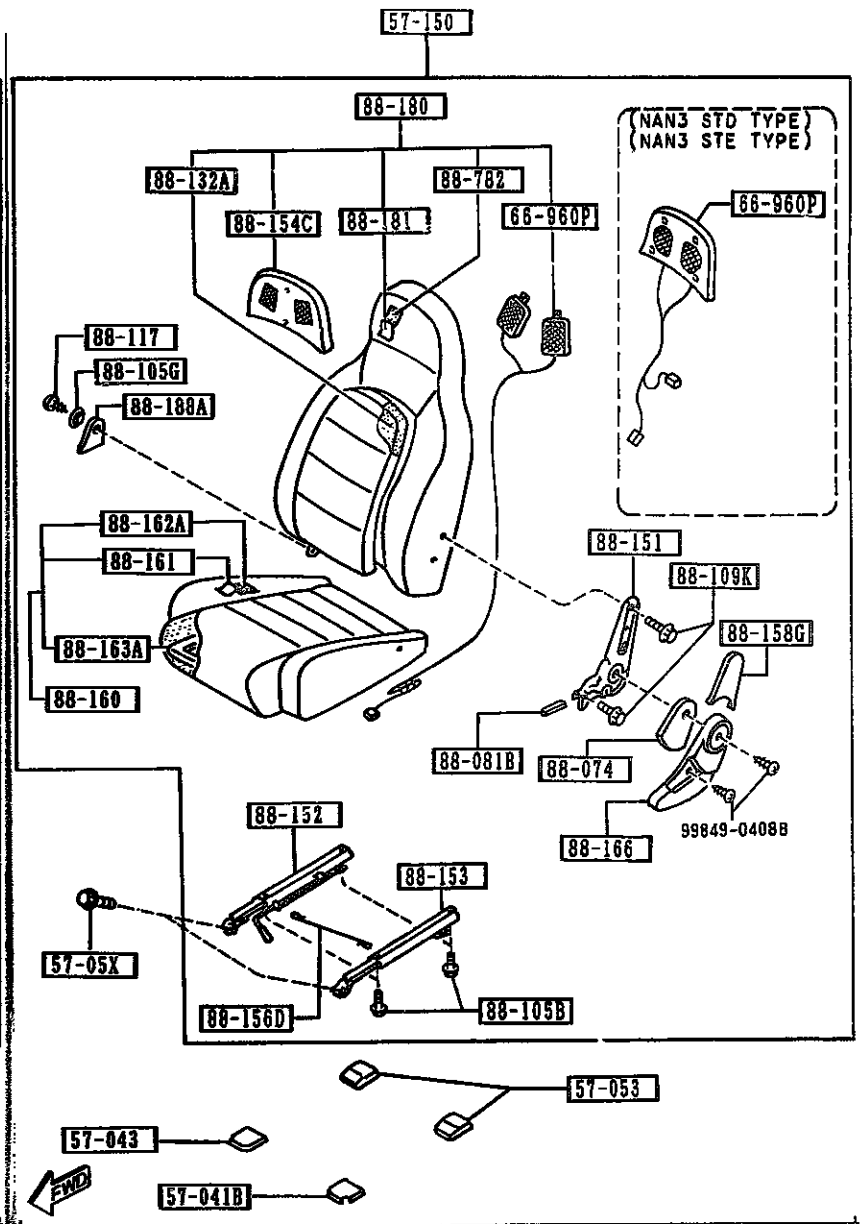
57-150
88-180
88-132A
88-154C
88-131
88-782
66-960P
(NAN3 STD TYPE)
(NAN3 STE TYPE)
66-960P
88-117
88-105G
88-188A
88-162A
88-161
88-163A
88-160
88-151
88-109K
88-158G
88-081B
88-074
88-166
99849-04088
88-152
88-153
57-05X
88-156D
88-105B
57-053
57-043
57-041B
FWD
AUNA03

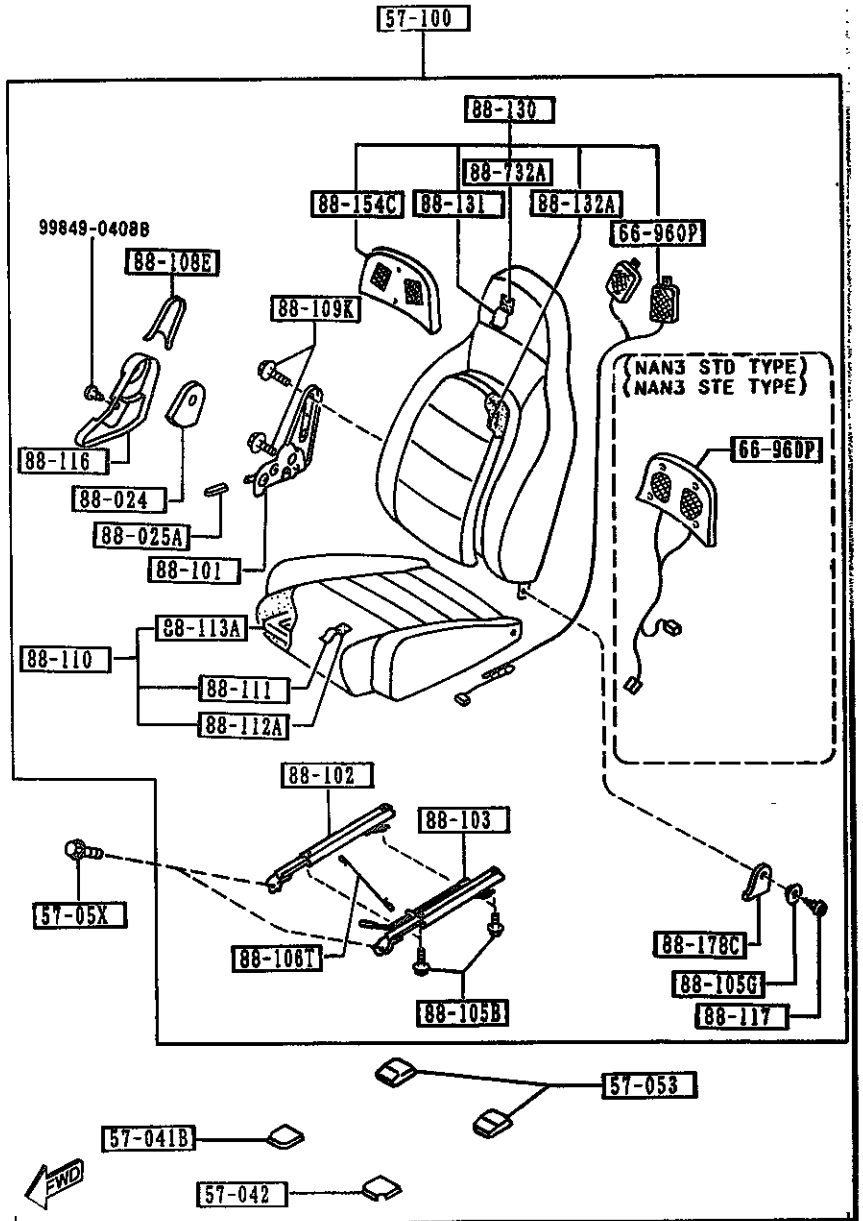

AUNA03 (CONT'D)

5700 -1 SEATS

PART NO.	QTY	MODEL/RESTRICTION	MODEL/RESTRICTION	MODEL/RESTRICTION	FROM-TO
57-041B		COVER NO.1,ADJ-FRT			
J001-57-041	2	PKG-C, RICO-20TH-ANV ., SPECIAL-ED, OPT, (NAN3 STC TYPE) (NAN3 STD TYPE)			
17 INT-		NA2 RED			
40 INT-		NA0 NA1 DARK GRAY			
57-042		COVER NO.2,ADJ-FRT			
N005-57-042	1	PKG-C, RICO-20TH-ANV ., SPECIAL-ED, OPT, (NAN3 STC TYPE) (NAN3 STD TYPE)			
17 INT-		NA2 RED			
40 INT-		NA0 NA1 DARK GRAY			
57-043		COVER NO.3,ADJ-FRT			
N005-57-043	1	PKG-C, RICO-20TH-ANV ., SPECIAL-ED, OPT, (NAN3 STC TYPE) (NAN3 STD TYPE)			
17 INT-		NA2 RED			
40 INT-		NA0 NA1 DARK GRAY			
57-05X		BOLT,LINK			
B455-57-05X AN(B455-57-05XA)	8				-3401
B455-57-05XA	8				3401-
57-053		COVER,ADJUSTER-REAR			
J001-57-051	4	PKG-C, RICO-20TH-ANV ., SPECIAL-ED, OPT, (NAN3 STC TYPE) (NAN3 STD TYPE)			
17 INT-		NA2 RED			
40 INT-		NA0 NA1 DARK GRAY			
57-100		SEAT(R),FRONT			
NA01-57-100G	1	BASE, (NAN3 STA TYPE)			
00 INT-		NA0 BLACK			
NA02-57-100H	1	PKG-A, (NAN3 STB TYPE)			
00 INT-		NA0 BLACK			

3401 NA351*-418700

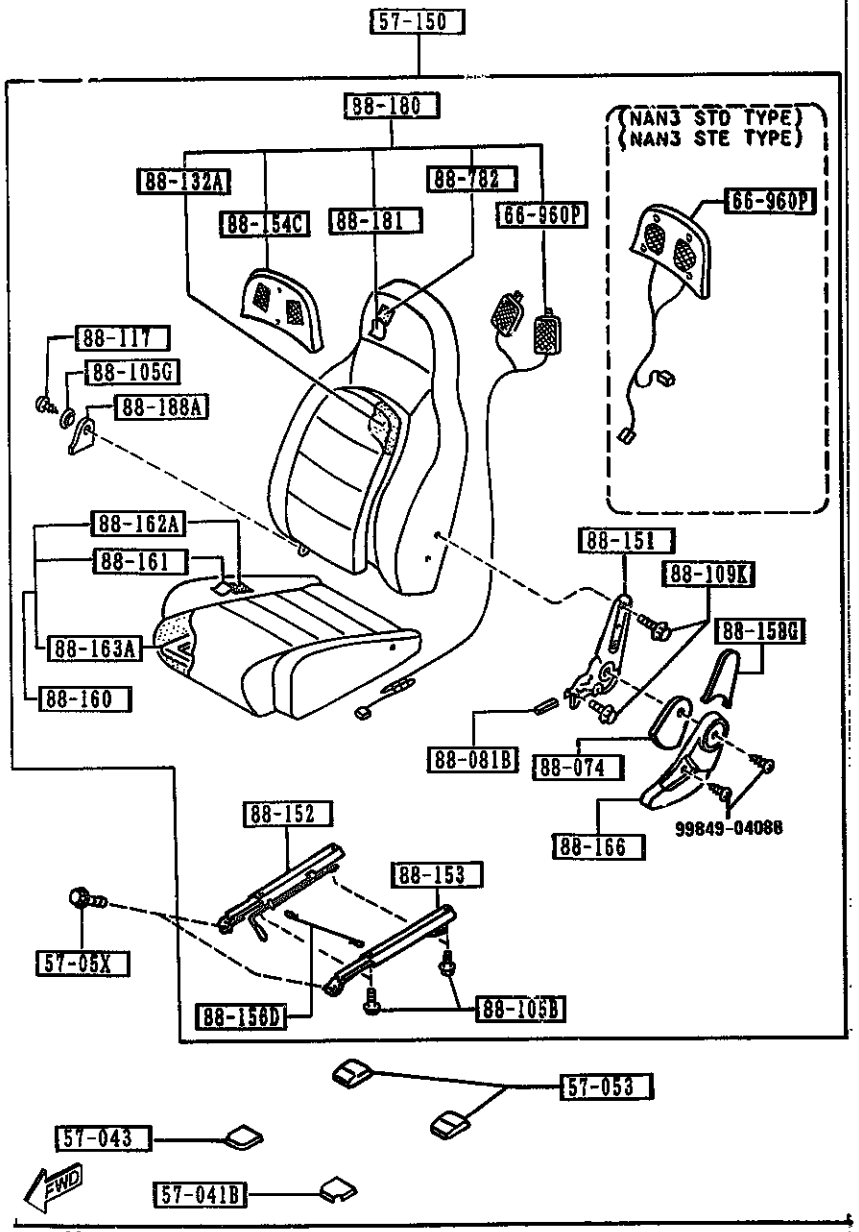

AUNA03

5700 -2 SEATS

PART NO.	QTY	MODEL/RESTRICTION	MODEL/RESTRICTION	MODEL/RESTRICTION	FROM-TO
CONT'D					
NA23-57-100B	1	PKG-C, RICO-20TH-ANV ., SPECIAL-ED, (NAN3 STC TYPE)			
17	INT-	NA2 RED			
88	INT-	NA1 TAN			
NA52-57-100B	1	OPT, (NAN3 STE TYPE)			
00	INT-	NA0 BLACK			
NA53-57-100A	1	OPT, SPECIAL-ED, (NAN3 STD TYPE)			
17	INT-	NA2 RED			
88	INT-	NA1 TAN			
57-150		SEAT(L),FRONT			
NA01-57-150G	1	BASE, (NAN3 STA TYPE)			
00	INT-	NA0 BLACK			
NA02-57-150H	1	PKG-A, (NAN3 STB TYPE)			
00	INT-	NA0 BLACK			
NA23-57-150B	1	PKG-C, RICO-20TH-ANV ., SPECIAL-ED, (NAN3 STC TYPE)			
17	INT-	NA2 RED			
88	INT-	NA1 TAN			
NA52-57-150B	1	OPT, (NAN3 STE TYPE)			
C0	INT-	NA0 BLACK			
NA53-57-150A	1	OPT, SPECIAL-ED, (NAN3 STD TYPE)			
17	INT-	NA2 RED			
88	INT-	NA1 TAN			
66-960P		SPEAKER,PILLOW-SEAT			
NA04-66-960B	2	PKG-A, PKG-C, RICO-20TH-ANV., SPECIAL-ED, (NAN3 STB TYPE) (NAN3 STC TYPE)			
N020-66-960A	2	OPT, SPECIAL-ED, (NAN3 STD TYPE) (NAN3 STE TYPE)			

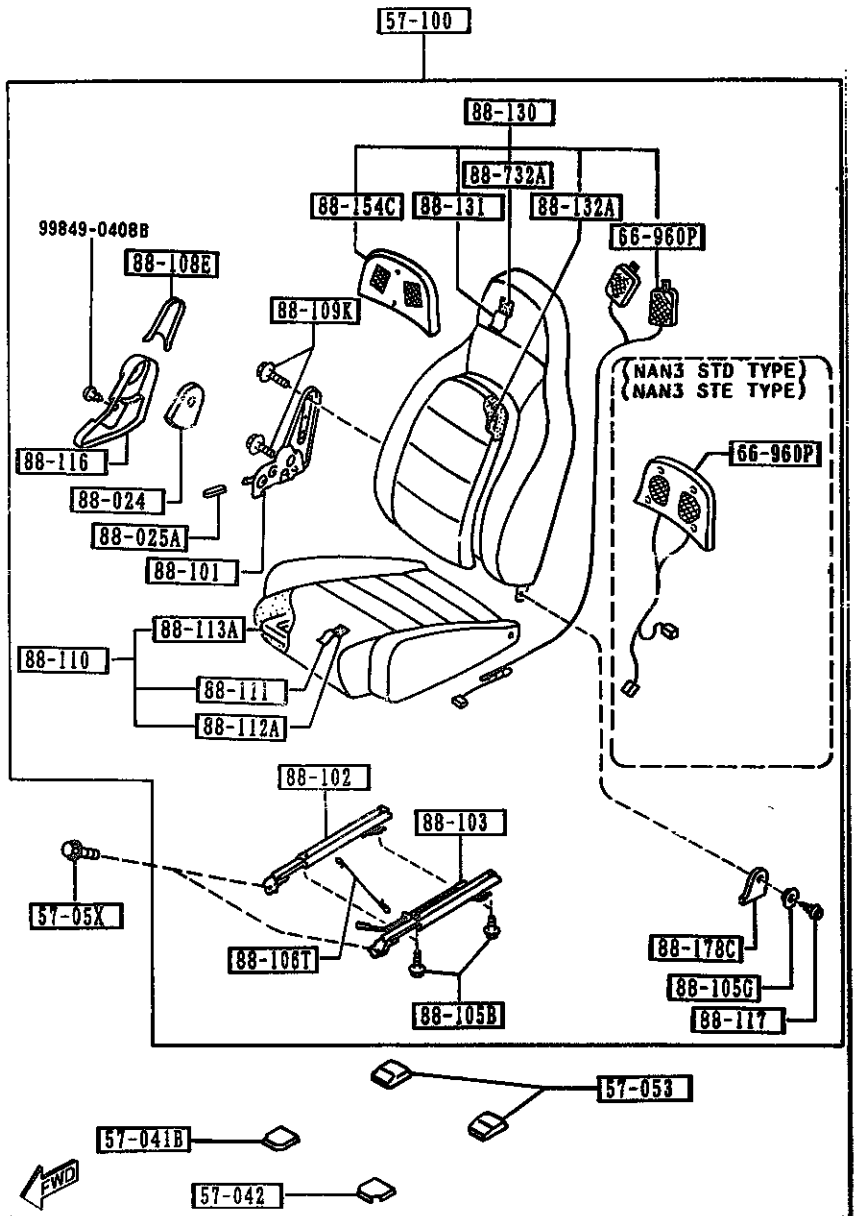

AUNA03 (CONT'D)

5700 -3 SEATS

PART NO.	QTY	MODEL/RESTRICTION	MODEL/RESTRICTION	MODEL/RESTRICTION	FROM-TO
88-024		PROTR(R),SEAT BELT			
NA01-88-033	1				
88-025A		KNOB(R),KNUCKLE			
NA01-88-034	1				
00	INT-	NA0 BLACK			
17	INT-	NA2 RED			
88	INT-	NA1 TAN			
88-074		PROTR(L),SEAT BELT			
NA01-88-083	1				
88-081B		KNOB(L),KNUCKLE			
NA01-88-084	1				
00	INT-	NA0 BLACK			
17	INT-	NA2 RED			
88	INT-	NA1 TAN			
88-101		KNUCKLE(R),RECLINING			
NA01-88-101A	1				
88-102		ADJUSTER,NO.1			
NA01-88-102A	1				
88-103		ADJUSTER,NO.2			
NA01-88-103A	1				
88-105B		BOLT,LINK			
H260-88-105	8				
88-105G		BUSH,HINGE			
H260-88-108	2				
02	INT-	NA0 NA2 BLACK			
18	INT-	NA2 RED			
88	INT-	NA1 TAN			
88-106T		WIRE,CONNECT			
NA01-88-106	1				

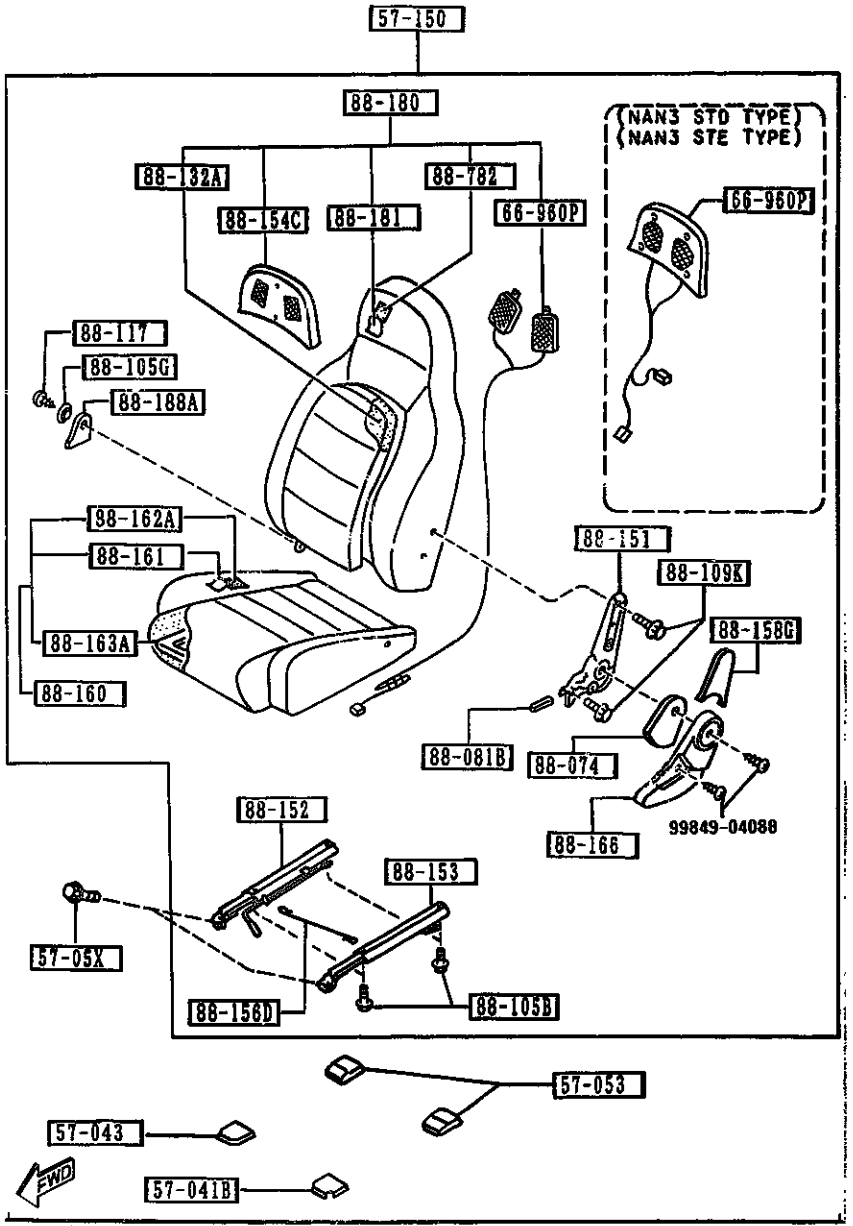

AUNA03

5700 -4 SEATS

PART NO.	QTY	MODEL/RESTRICTION	MODEL/RESTRICTION	MODEL/RESTRICTION	FROM-TO
88-108E		COVER(R),SEAT BACK			
NA01-88-036	1				
00	INT-	NA0 BLACK			
17	INT-	NA2 RED			
88	INT-	NA1 TAN			
88-109K		SCREW,KNUCKLE			
H260-88-109	8				
88-110		CUSHION(R),FRT SEAT			
NA01-88-110	1	BASE, PKG-A, OPT, (NAN3 STA TYPE) (NAN3 STB TYPE) (NAN3 STE TYPE)			
00	INT-	NA0 BLACK			
NA23-88-110	1	PKG-C, RICO-20TH-ANV., SPECIAL-ED, OPT, (NAN3 STC TYPE) (NAN3 STD TYPE)			
17	INT-	NA2 RED			
88	INT-	NA1 TAN			
88-111		TRIM(R),SEAT CUSHION			
NA01-88-111	1	BASE, PKG-A, OPT, (NAN3 STA TYPE) (NAN3 STB TYPE) (NAN3 STE TYPE)			
00	INT-	NA0 BLACK			
NA23-88-111	1	PKG-C, RICO-20TH-ANV., SPECIAL-ED, OPT, (NAN3 STC TYPE) (NAN3 STD TYPE)			
17	INT-	NA2 RED			
88	INT-	NA1 TAN			
88-112A		PAD(R),CUSHION-FRT			
NA01-88-112	1				
88-113A		FRAME(R),CUSHION-FRT			
NA01-88-113	1				
88-116		COVER(R),KNUCKLE			
NA01-88-031	1				

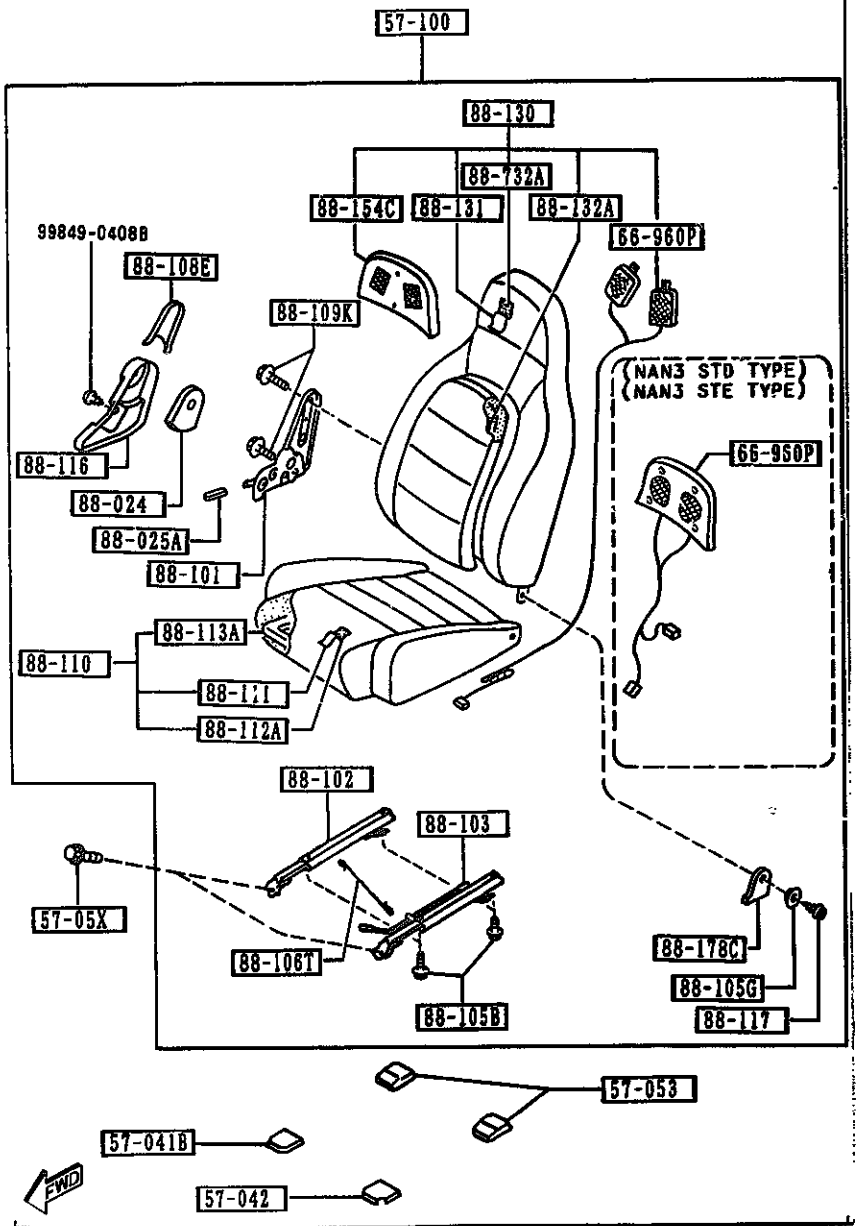

PART NO.	QTY	MODEL/RESTRICTION	MODEL/RESTRICTION	MODEL/RESTRICTION	FROM-TO
CONT'D					
00	INT-	NA0 BLACK			
17	INT-	NA2 RED			
88	INT-	NA1 TAN			
| 88-117 |		SCREW,KNUCKLE			
H260-88-107	2				
| 88-130 |		BACK(R),FRONT SEAT			
NA01-88-130A	1	BASE, (NAN3 STA TYPE)			
00	INT-	NA0 BLACK			
NA02-88-130B	1	PKG-A, (NAN3 STB TYPE)			
00	INT-	NA0 BLACK			
NA23-88-130B	1	PKG-C, RICO-20TH-ANV ., SPECIAL-ED, (NAN3 STC TYPE)			
17	INT-	NA2 RED			
88	INT-	NA1 TAN			
NA52-88-130A	1	OPT, (NAN3 STE TYPE)			
00	INT-	NA0 BLACK			
NA53-88-130A	1	OPT, SPECIAL-ED, (NAN3 STD TYPE)			
17	INT-	NA2 RED			
88	INT-	NA1 TAN			
| 88-131 |		TRIM(R),SEAT BACK			
NA01-88-131	1	BASE, PKG-A, (NAN3 STA TYPE) (NAN3 STB TYPE)			
00	INT-	NA0 BLACK			
NA23-88-131	1	PKG-C, RICO-20TH-ANV ., SPECIAL-ED, (NAN3 STC TYPE)			
17	INT-	NA2 RED			
88	INT-	NA1 TAN			
NA53-88-131	1	OPT, SPECIAL-ED, (NAN3 STD TYPE)			
17	INT-	NA2 RED			
88	INT-	NA1 TAN			

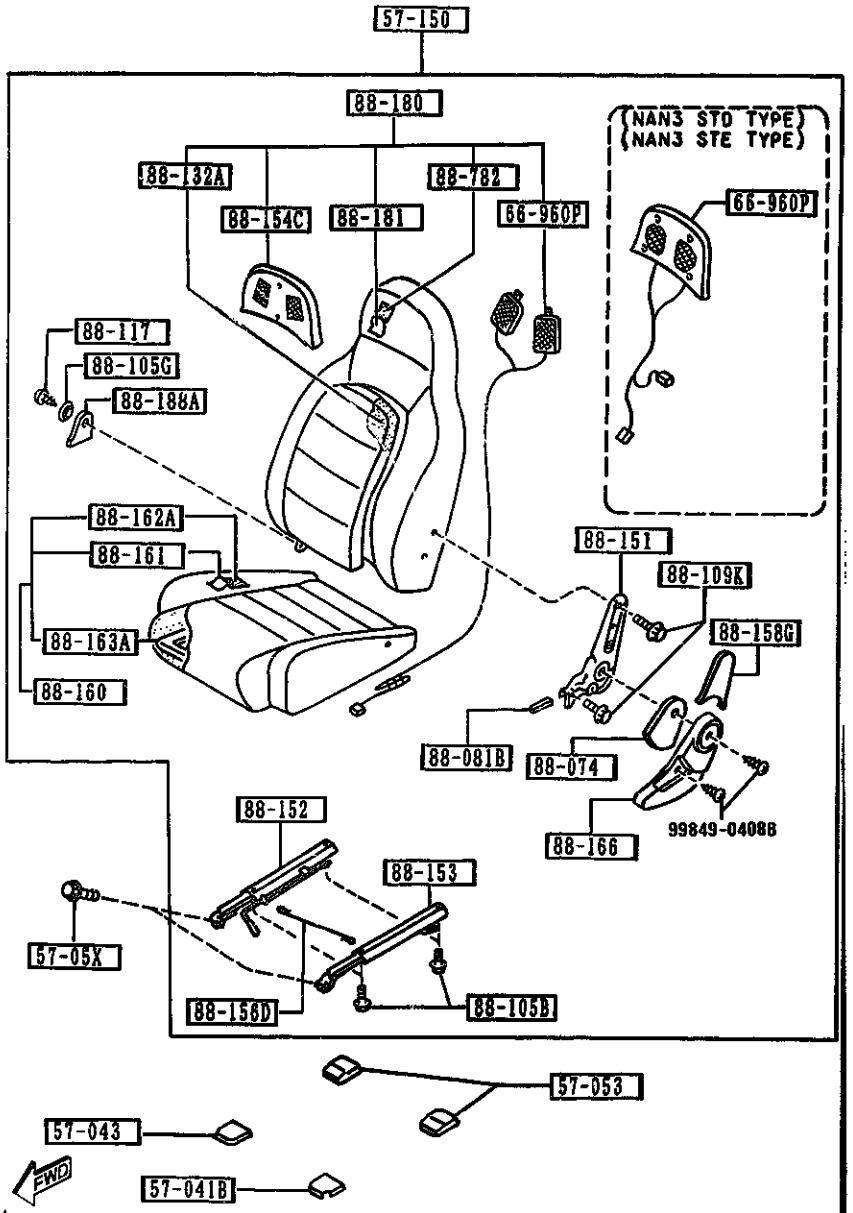

AUNA03

5700 -6 SEATS

PART NO.	QTY	MODEL/RESTRICTION	MODEL/RESTRICTION	MODEL/RESTRICTION	FROM-TO
CONT'D					
NA54-88-131	1	OPT, (NAN3 STE TYPE)			
00	INT-	NA0 BLACK			
88-132A		PAD(R),BACK-FRT			
NA01-88-132A	2	BASE, PKG-A, PKG-C, RICO-20TH-ANV., SPECIAL-ED, (NAN3 STA TYPE) (NAN3 STB TYPE) (NAN3 STC TYPE)			
88-151		KNUCKLE(L),RECLINING			
NA01-88-151A	1				
88-152		ADJUSTER NO.3			
NA01-88-152A	1				
88-153		ADJUSTER NO.4			
NA01-88-153A	1				
88-154C		COVER,HEAD REST			
NA01-88-137	2	BASE, PKG-A, PKG-C, RICO-20TH-ANV., SPECIAL-ED, (NAN3 STA TYPE) (NAN3 STB TYPE) (NAN3 STC TYPE)			
88-156D		WIRE,CONNECT			
NA01-88-156	1				
88-158G		COVER(L),SEAT BACK			
NA01-88-086	1				
00	INT-	NA0 BLACK			
17	INT-	NA2 RED			
88	INT-	NA1 TAN			
88-160		CUSHION(L),FRT SEAT			
NA01-88-160	1	BASE, PKG-A, OPT, (NAN3 STA TYPE) (NAN3 STB TYPE) (NAN3 STE TYPE)			
00	INT-	NA0 BLACK			
NA23-88-160	1	PKG-C, RICO-20TH-ANV., SPECIAL-ED, OPT,			

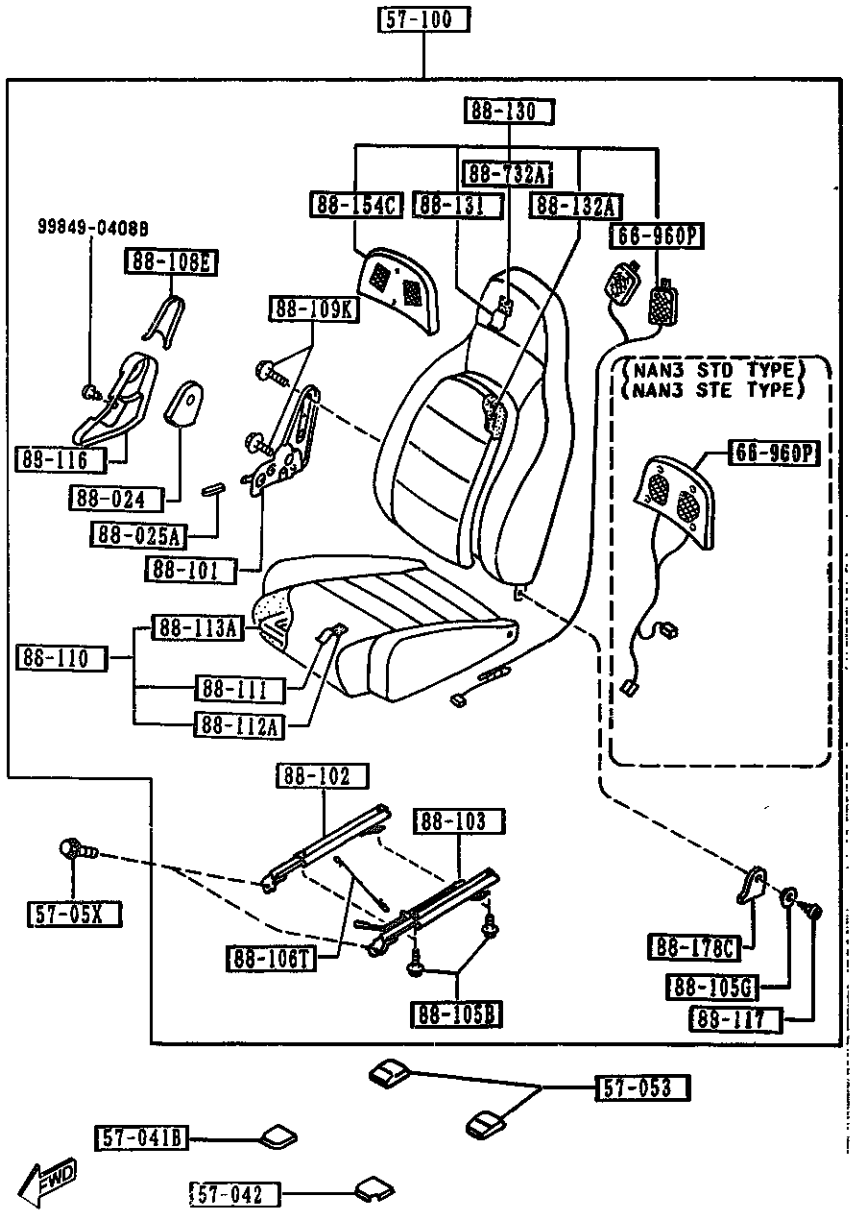

AUNA03 (CONT'D)

PART NO.	QTY	MODEL/RESTRICTION	MODEL/RESTRICTION	MODEL/RESTRICTION	FROM-TO
CONT'D		(NAN3 STC TYPE) (NAN3 STD TYPE)			
17	INT-	NA2 RED			
88	INT-	NA1 TAN			
88-161		TRIM(L),SEAT CUSHION			
NA01-88-161	1	BASE, PKG-A, OPT, (NAN3 STA TYPE) (NAN3 STB TYPE) (NAN3 STE TYPE)			
00	INT-	NA0 BLACK			
NA23-88-161	1	PKG-C, RICO-20TH-ANV ,, SPECIAL-ED, OPT, (NAN3 STC TYPE) (NAN3 STD TYPE)			
17	INT-	NA2 RED			
88	INT-	NA1 TAN			
88-162A		PAD(L),CUSHION-FRT			
NA01-88-162	1	BASE, PKG-A, OPT, (NAN3 STA TYPE) (NAN3 STB TYPE) (NAN3 STE TYPE)			
N005-88-162	1	PKG-C, RICO-20TH-ANV ,, SPECIAL-ED, OPT, (NAN3 STC TYPE) (NAN3 STD TYPE)			
88-163A		FRAME(L),CUSHION-FRT			
NA01-88-163	1				
88-166		COVER(L),KNUCKLE			
NA01-88-081	1				
00	INT-	NA0 BLACK			
17	INT-	NA2 RED			
88	INT-	NA1 TAN			
88-178C		COVER(R),HINGE			
NA01-88-035	1				
00	INT-	NA0 BLACK			
17	INT-	NA2 RED			
88	INT-	NA1 TAN			

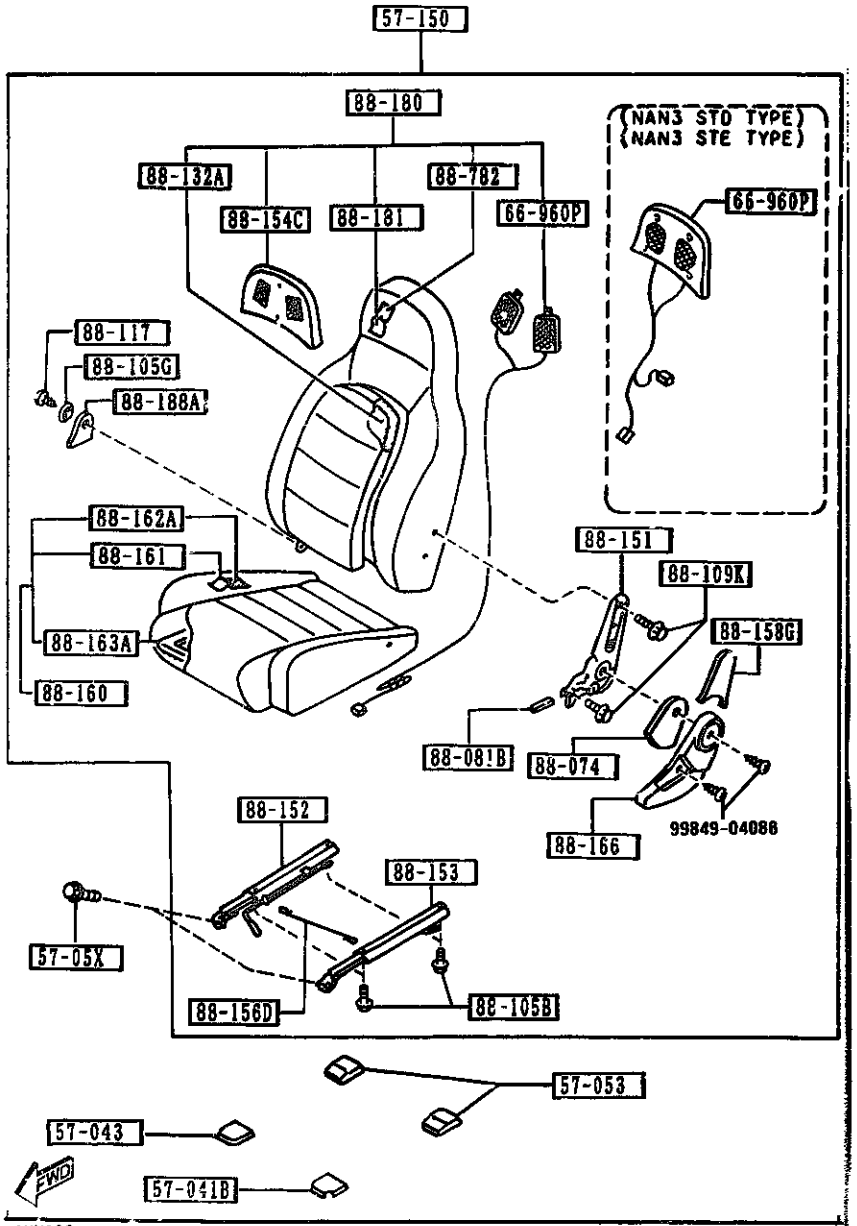

AUNA03

5700 -8 SEATS

PART NO.	QTY	MODEL/RESTRICTION	MODEL/RESTRICTION	MODEL/RESTRICTION	FROM-TO
88-180		BACK(L),FRONT SEAT			
NA01-88-180A	1	BASE, (NAN3 STA TYPE)			
00	INT-	NA0 BLACK			
NA02-88-180B	1	PKG-A, (NAN3 STB TYPE)			
00	INT-	NA0 BLACK			
NA23-88-180B	1	PKG-C, RICO-20TH-ANV .. SPECIAL-ED, (NAN3 STC TYPE)			
17	INT-	NA2 RED			
88	INT-	NA1 TAN			
NA52-88-180A	1	OPT, (NAN3 STE TYPE)			
00	INT-	NA0 BLACK			
NA53-88-180A	1	OPT, SPECIAL-ED, (NAN3 STD TYPE)			
17	INT-	NA2 RED			
88	INT-	NA1 TAN			
88-181		TRIM(L),SEAT BACK			
NA01-88-181	1	BASE, PKG-A, (NAN3 STA TYPE) (NAN3 STB TYPE)			
00	INT-	NA0 BLACK			
NA23-88-181	1	PKG-C, RICO-20TH-ANV .. SPECIAL-ED, (NAN3 STC TYPE)			
17	INT-	NA2 RED			
88	INT-	NA1 TAN			
NA53-88-181	1	OPT, SPECIAL-ED, (NAN3 STD TYPE)			
17	INT-	NA2 RED			
88	INT-	NA1 TAN			
NA54-88-181	1	OPT, (NAN3 STE TYPE)			
00	INT-	NA0 BLACK			
88-188A		COVER(L),HINGE			
NA01-88-085	1				
00	INT-	NA0 BLACK			

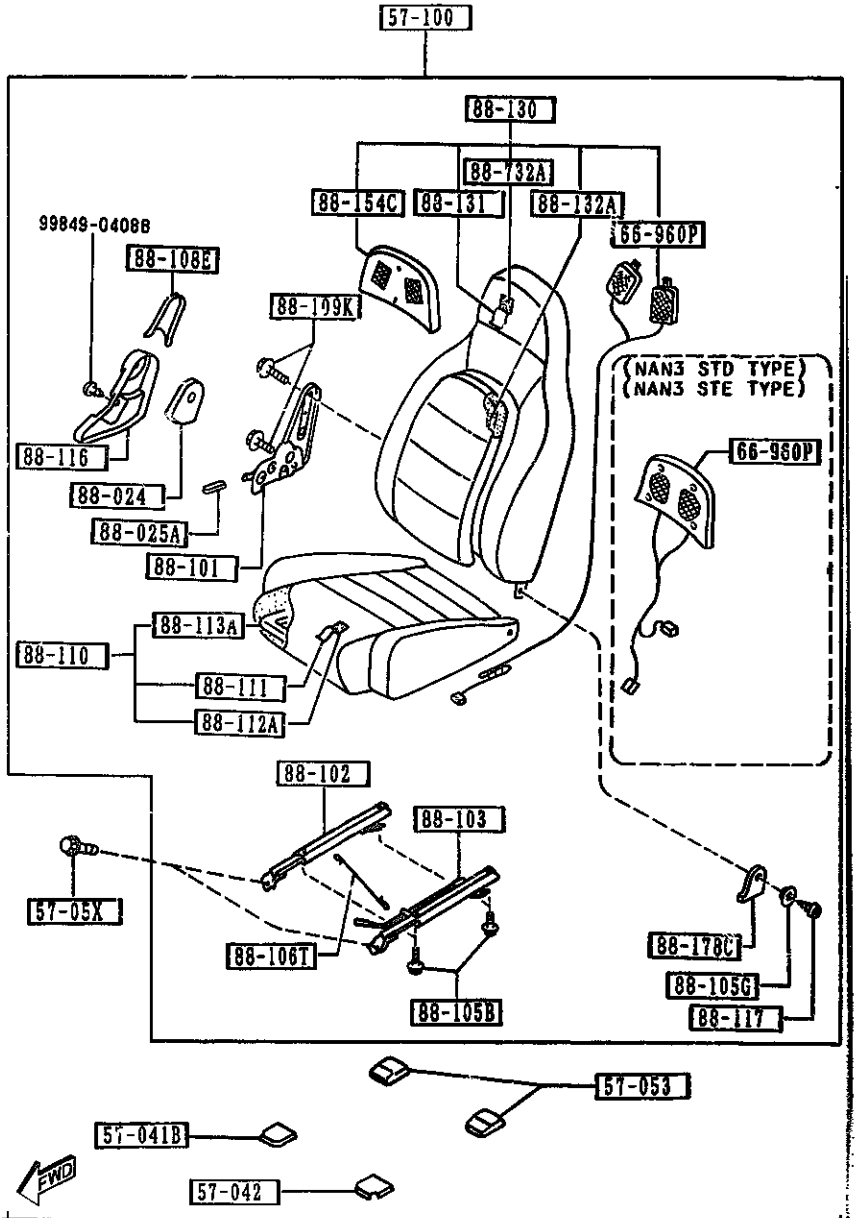

AUNA03 (CONT'D)

PART NO.	QTY	MODEL/RESTRICTION	MODEL/RESTRICTION	MODEL/RESTRICTION	FROM-TO
CONT'D					
17	INT-	NA2 RED			
88	INT-	NA1 TAN			
88-732A		PAD'B'(R),BACK-FRT			
NA01-88-732A	1	BASE, PKG-A, PKG-C, RICO-20TH-ANV., SPECIAL-ED, (NAN3 STA TYPE) (NAN3 STB TYPE) (NAN3 STC TYPE)			
88-782		PAD'B'(L),BACK-FRT			
NA01-88-782A	1	BASE, PKG-A, PKG-C, RICO-20TH-ANV., SPECIAL-ED, (NAN3 STA TYPE) (NAN3 STB TYPE) (NAN3 STC TYPE)			

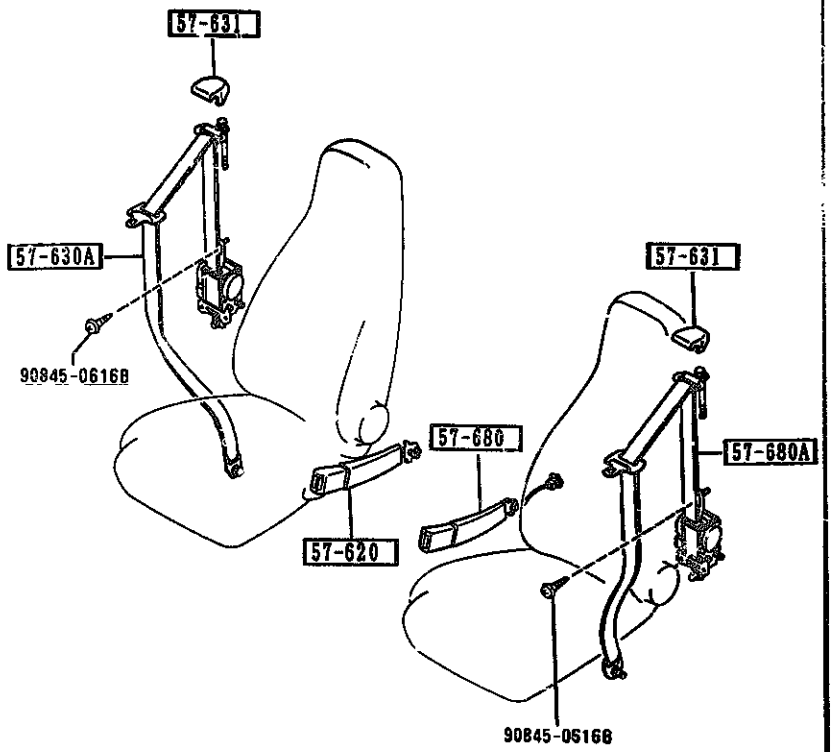

AUNA03

PART NO.	QTY	MODEL/RESTRICTION	MODEL/RESTRICTION	MODEL/RESTRICTION	FROM-TO
57-620		BELT'A',FRONT SEAT			
NA01-57-620	1				-3301
00	INT-	NA0 NA1 NA2 BLACK			
NA01-57-620A	1				3301-
00	INT-	NA0 NA1 NA2 BLACK			
57-630A		BELT'B'(R),FRT SEAT			
NA01-57-630C	1				
00	INT-	NA0 BLACK			
17	INT-	NA2 RED			
88	INT-	NA1 TAN			
57-631		COVER,ANCHOR			
NA01-57-631B	2				
00	INT-	NA0 NA1 NA2 BLACK			
57-680		BELT'A',FRONT SEAT			
NA01-57-680	1				-3301
00	INT-	NA0 NA1 NA2 BLACK			
NA01-57-680A	1				3301-
00	INT-	NA0 NA1 NA2 BLACK			
57-680A		BELT'B'(L),FRT SEAT			
NA01-57-690A	1				
00	INT-	NA0 BLACK			
17	INT-	NA2 RED			
88	INT-	NA1 TAN			

3301 NA351※-416214

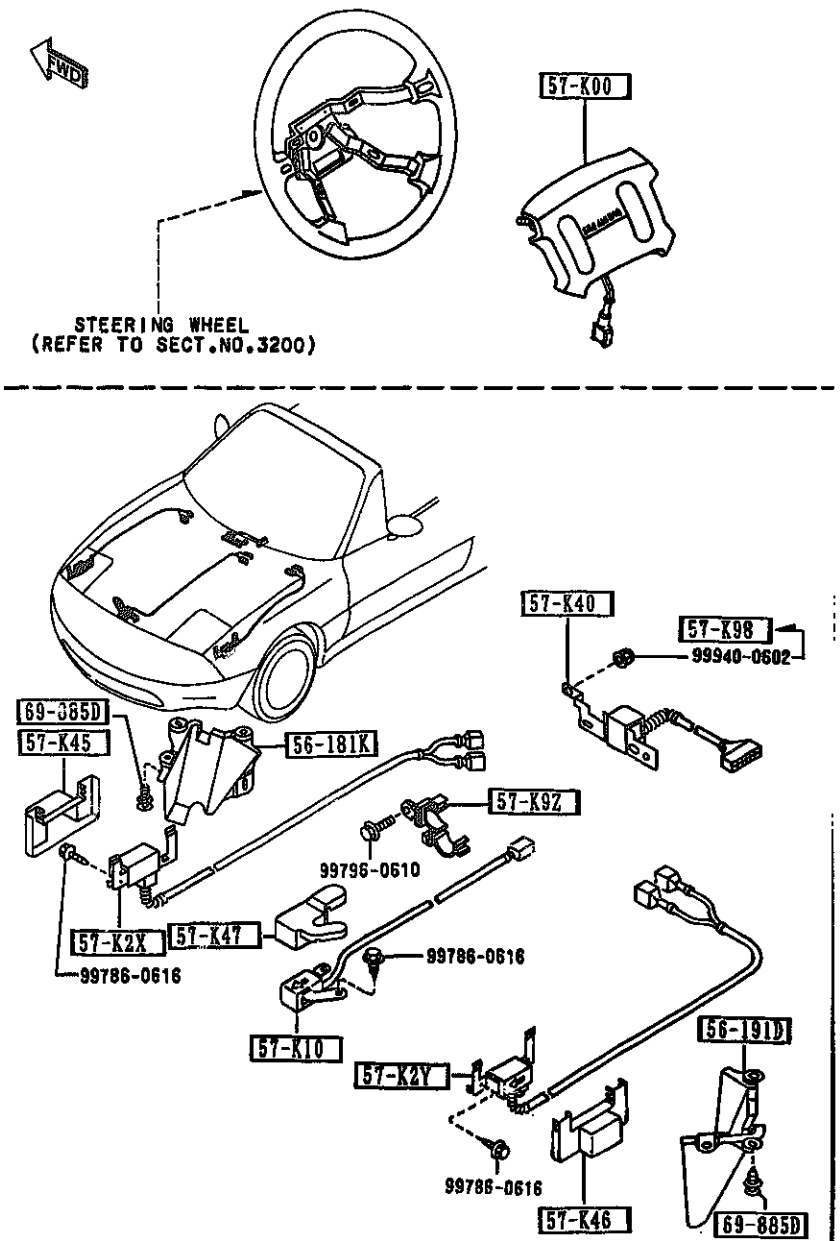

AUNA03

5795 -1 AIR BAG

PART NO.	QTY	MODEL/RESTRICTION	MODEL/RESTRICTION	MODEL/RESTRICTION	FROM-TO
56-181K		COVER(R),SENSOR-AIR BAG			
NA01-56-191A	1				
56-191D		COVER(L),SENSOR-AIR BAG			
NA01-56-181A	1	(W/O A.LOCK BRAKE)			
57-K00		MODULE,AIR BAG			
NA01-57-K00C	1				-2B02
00	INT-	NA0 NA1 BLACK			
NA01-57-K00D	1				2B02-
00	INT-	NA0 NA1 NA2 BLACK			
57-K10		SENSOR(C),AIR BAG			
NA01-57-K10H	1				
57-K2X		SENSOR(R),AIR BAG			
NA01-57-K2XJ	1				
57-K2Y		SENSOR(L),AIR BAG			
NA01-57-K2YJ	1				
57-K40		SENSOR,AIR BAG-INNER			
NA01-57-K40D	1				
57-K45		COVER(R),SENSOR			
NA01-57-K45B	1				
57-K46		COVER(L),SENSOR			
NA01-57-K46B	1				
57-K47		COVER(C),SENSOR			
NA01-57-K47C	1				
57-K9Z		BRACKET,CLIP			
NA01-57-K9ZB	1				
57-K98		NUT			
FC66-57-K98	2				3401-
69-885D		FASTENER			

2B02 NA351*-401954
3401 NA351*-418700

CAT. AUNA03-04 1994-10

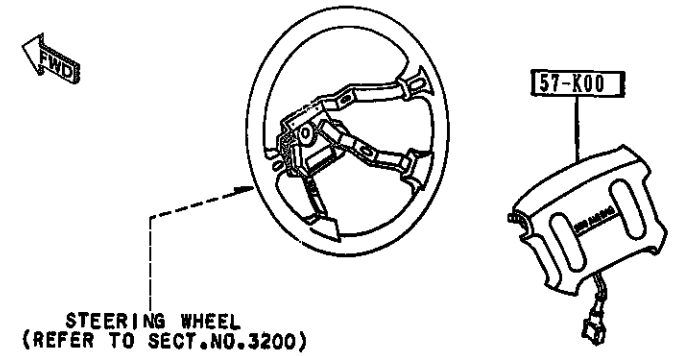

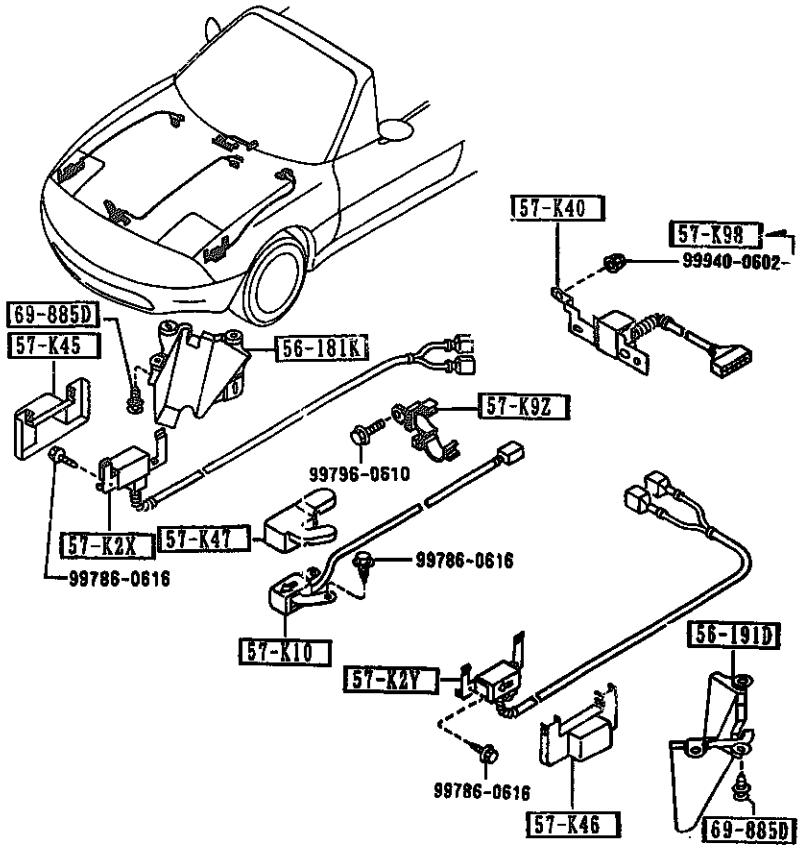

AUNA03

PART NO.	QTY	MODEL/RESTRICTION	MODEL/RESTRICTION	MODEL/RESTRICTION	FROM-TO
CONT'D					
NA01-56-145	4	(A.LOCK BRAKE)			
NA01-56-145	8	(W/O A.LOCK BRAKE)			

CAT. AUNA03-04

1994-10

5800 FRONT DOORS

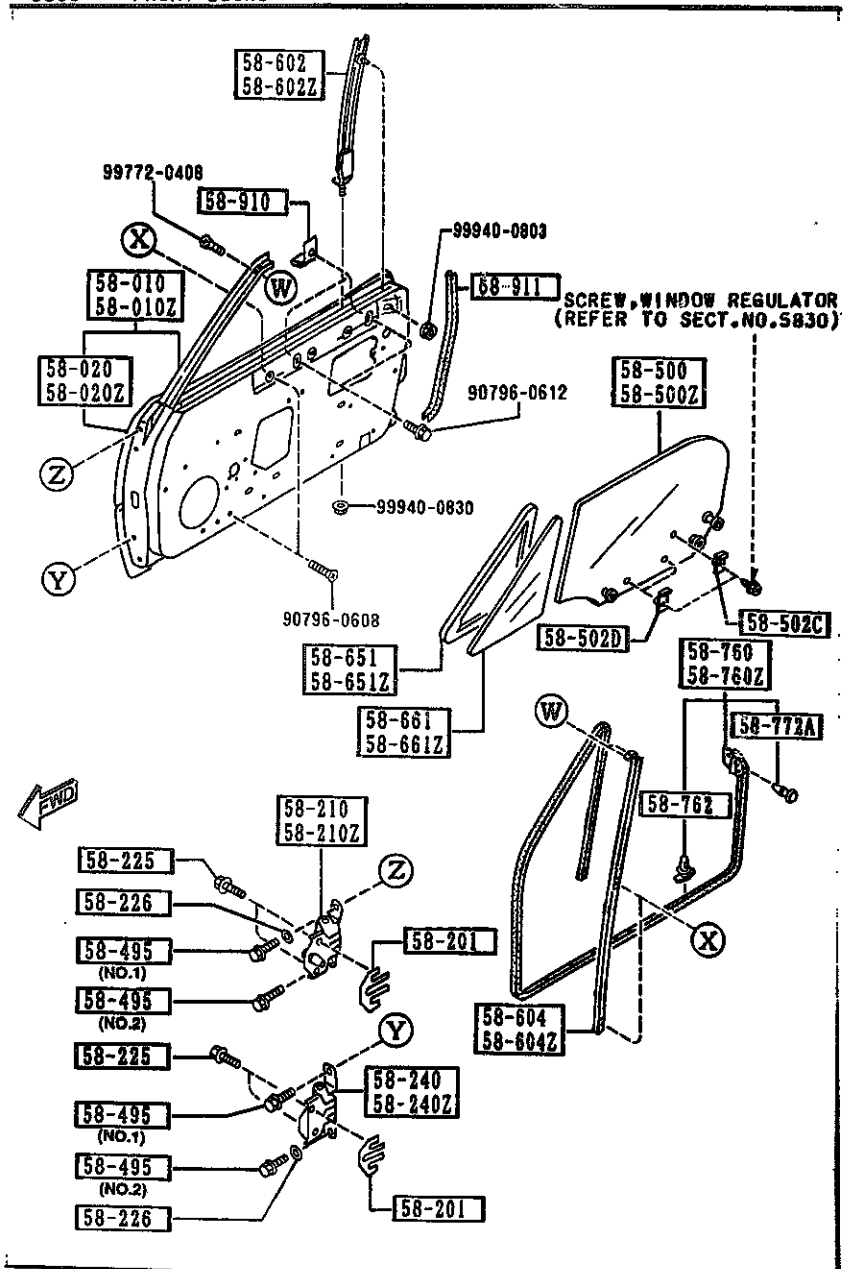

AUNA03

PART NO.	QTY	MODEL/RESTRICTION	MODEL/RESTRICTION	MODEL/RESTRICTION	FROM-TO
58-010		BODY(R),FRONT DOOR			
NAY2-58-020	1				
58-010Z		BODY(L),FRONT DOOR			
NAY2-59-020	1				
58-020		PANEL(R),OUT.-FRT DOOR			
NA52-58-030A	1				
58-020Z		PANEL(L),OUT.-FRT DOOR			
NA52-59-030A	1				
58-201		SHIM,HINGE-DOOR			
B092-58-201A	4				
58-210		HINGE(R),DOOR-UPPER			
FB01-58-210	1				
58-210Z		HINGE(L),DOOR-UPPER			
FB01-59-210	1				
58-225		BOLT,SETTING-HINGE LOWER			
B455-58-225	8				
58-226		WASHER,SETTING			
GJ21-58-226	4				
58-240		HINGE(R),DOOR-LOWER			
B156-58-240	1				
58-240Z		HINGE(L),DOOR-LOWER			
B156-59-240	1				
58-495		BOLT,SET			
BA54-58-225	4	(ILLUST. NO.1)			
S085-58-225	4	(ILLUST. NO.2)			
58-500		GLASS(R),DOOR-FRT			
NA01-58-510	1				

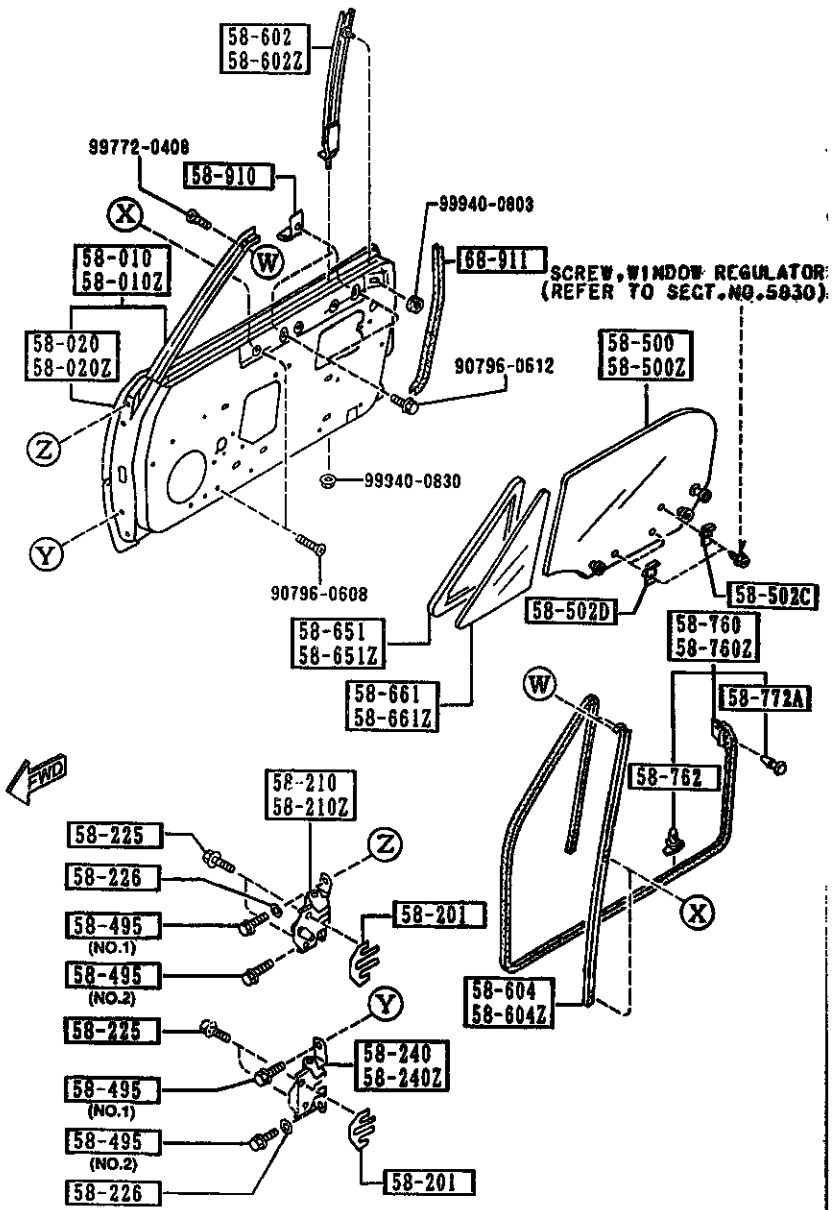

AUNA03

PART NO.	QTY	MODEL/RESTRICTION	MODEL/RESTRICTION	MODEL/RESTRICTION	FROM-TO
58-500Z		GLASS(L),DOOR-FRT			
NA01-59-510	1				
58-502C		GROMMET,SCREW			
B235-58-502	2				
58-502D		GROMMET,SCREW-DOOR GLASS			
UB39-58-502A	4				
58-603		GUIDE'B'(R),GLASS			
NA01-58-603C	1				-3330
AN(NA01-58-603D)					
NA01-58-603D	1				3330-
58-602Z		GUIDE'B'(L),GLASS			
NA01-59-603C	1				-3330
AN(NA01-59-603D)					
NA01-59-603D	1				3330-
58-604		CHANNEL(R),DIVISION-DOOR			
NA01-58-604B	1				
58-604Z		CHANNEL(L),DIVISION-DOOR			
NA01-59-604B	1				
58-651		WEATHERSTRIP(R)			
NA01-58-651A	1				
58-651Z		WEATHERSTRIP(L)			
NA01-59-651A	1				
58-661		GLASS(R),VENTILATOR			
NA01-58-661	1				
58-661Z		GLASS(L),VENTILATOR			
NA01-59-661	1				
58-760		WEATHERSTRIP(R),DOOR			
NA01-58-760D	1				
58-760Z		WEATHERSTRIP(L),DOOR			

3330 NA351*-418700

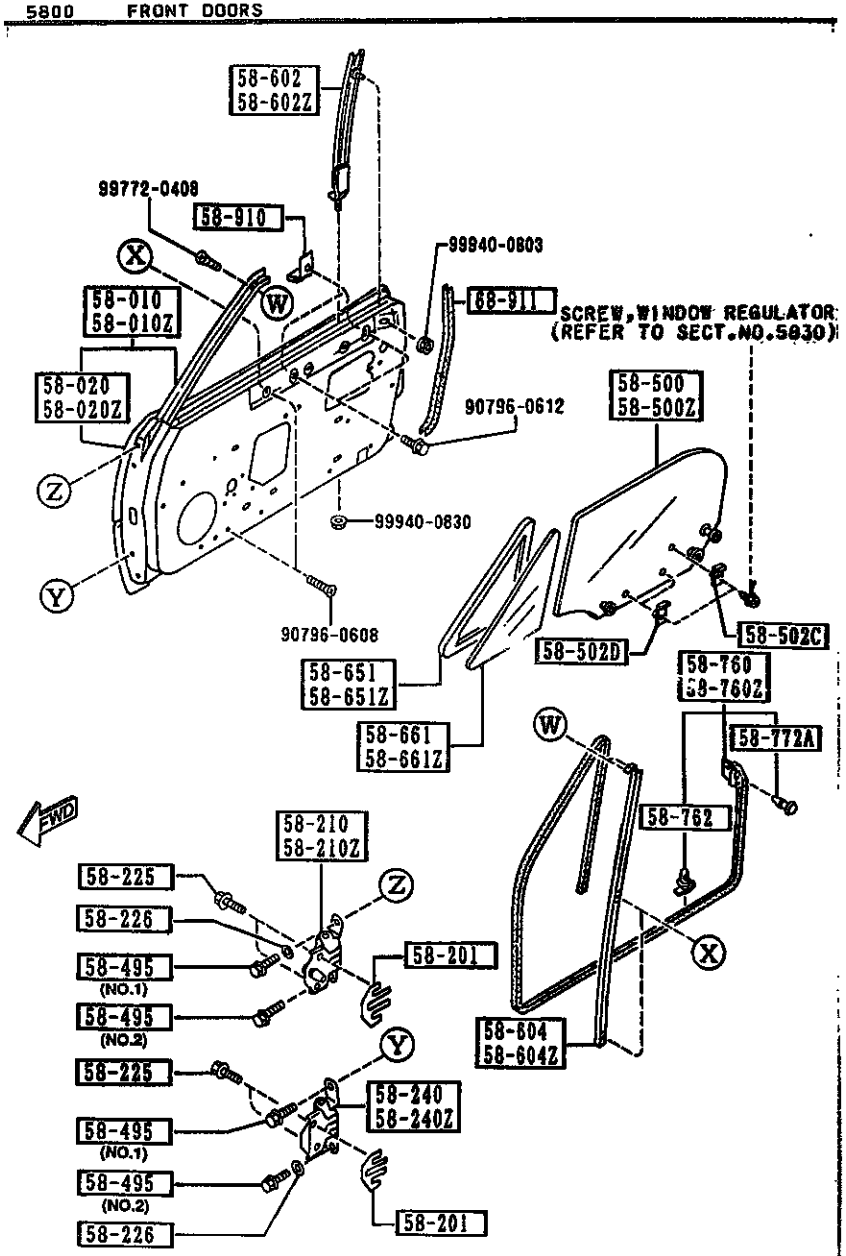

AUNA03

PART NO.	QTY	MODEL/RESTRICTION	MODEL/RESTRICTION	MODEL/RESTRICTION	FROM-TO
CONT'D					
NA01-59-760D	1				
58-762		FASTENER			
0031-58-762	42				
58-772A		FASTENER			
1011-58-772	4				
58-910		STOPPER,GLASS			
H272-58-911	4				
68-911		WELT,SEAMING			
NA01-68-911	2				
00	INT-	NA0 NA1 NA2 BLACK			

CAT. AUNA03-04

1994-10

5830 FRONT DOOR MECHANISMS

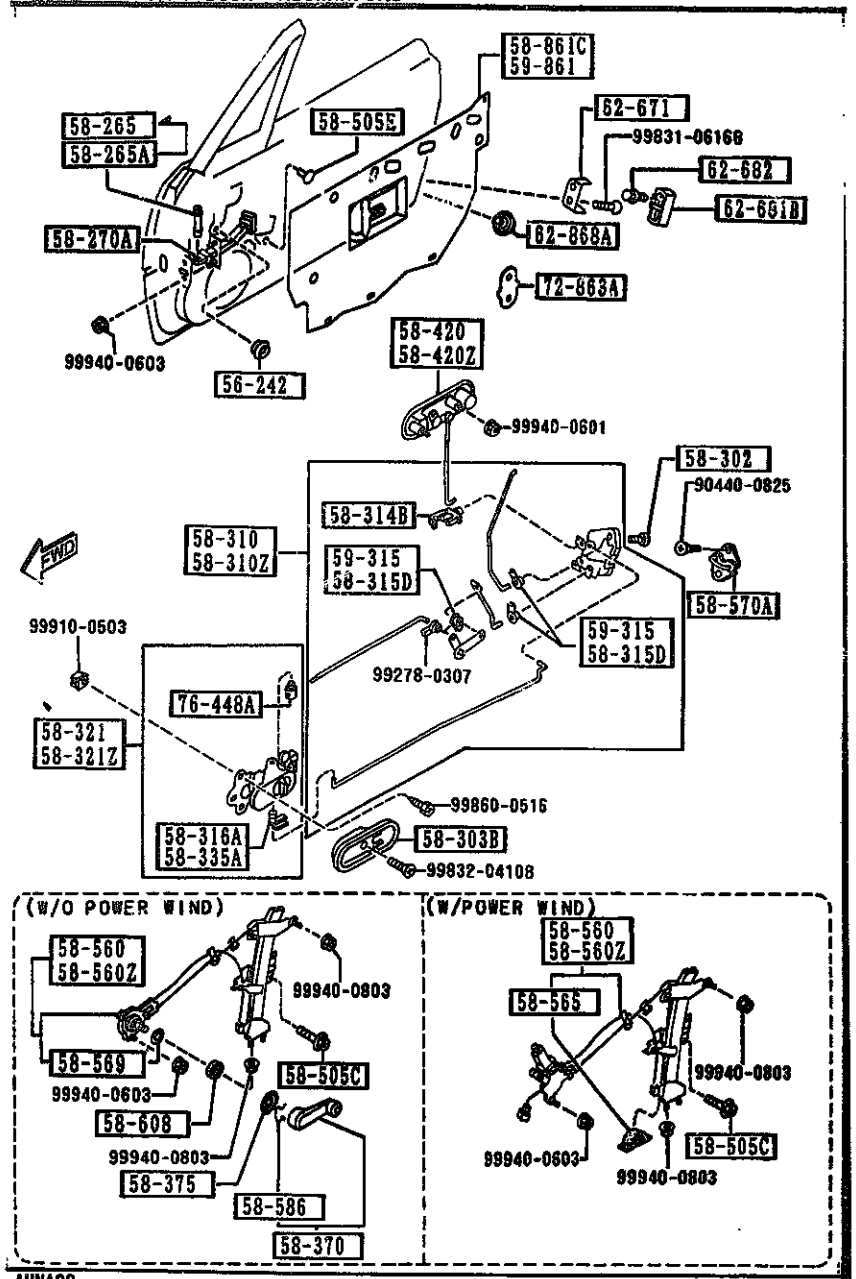

AUNA03

PART NO.	QTY	MODEL/RESTRICTION	MODEL/RESTRICTION	MODEL/RESTRICTION	FROM-TO
56-242		PLUG,DRAIN			
0118-56-242B	2				
58-265		PIN,CHECKER			
BC1D-58-265	2				3201-
58-265A		PIN,CHECKER			
H260-58-265C	2				-3201
58-270A		CHECKER,DOOR			
NA01-58-270A	2				
58-302		SCREW,TAPPING-DOOR LOCK			
HG50-58-302A	6				
58-303B		COVER,INNER HANDLE			
NA01-58-303	2				
00	INT-	NA0 NA1 NA2 BLACK			
58-310		LOCK(R),DOOR			
NA01-58-310B	1				
58-310Z		LOCK(L),DOOR			
NA01-59-310B	1				
58-314B		JOINT			
H043-72-411	2				
58-315D		CLIP (R)			
G030-58-315	3				
58-316A		CLIP			
B001-59-335	1				
58-321		HANDLE(R),INNER			
NA01-58-330A	1				
00	INT-	NA0 NA1 NA2 BLACK			
58-321Z		HANDLE(L),INNER			
NA01-59-330A	1				

3201 NA351*-413071

CAT. AUNA03-04

1994-10

5830 FRONT DOOR MECHANISMS

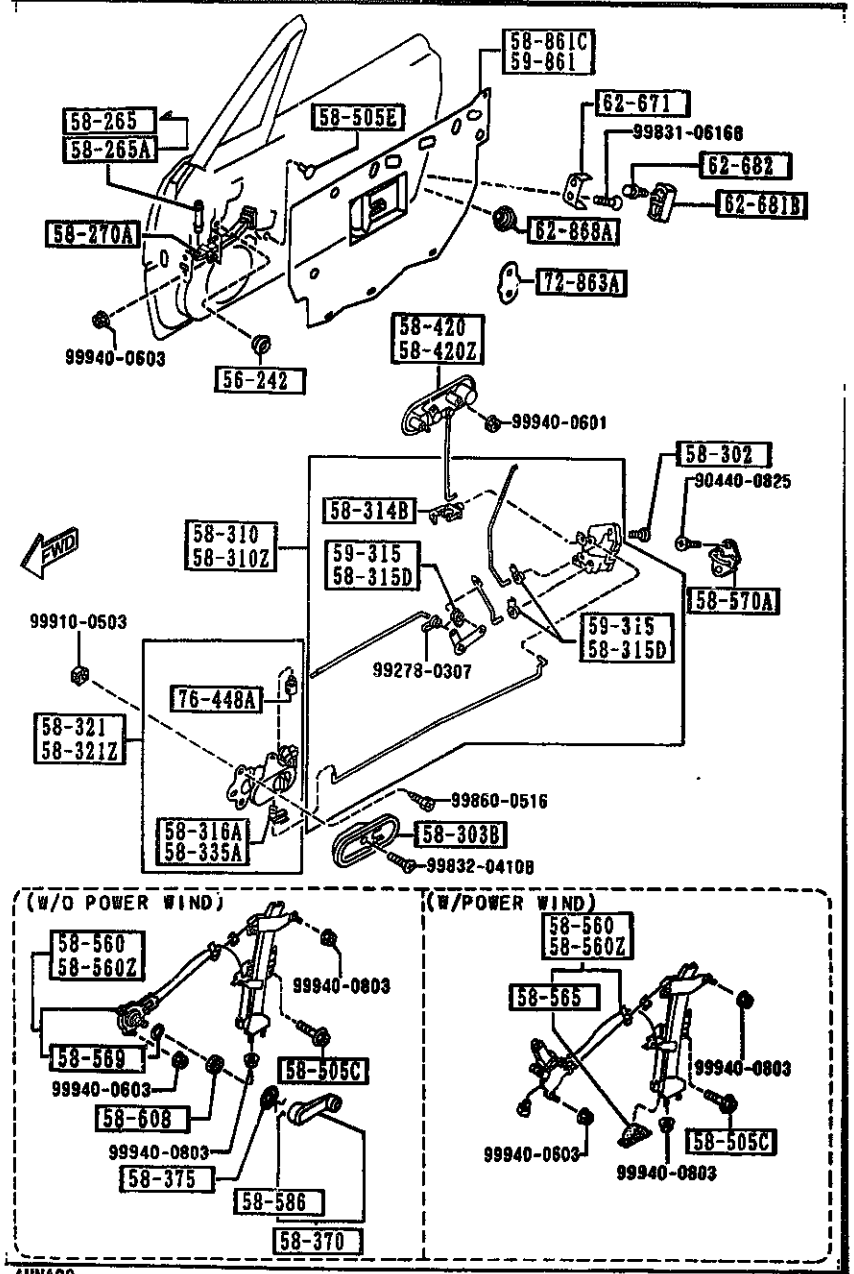

AUNA03

PART NO.	QTY	MODEL/RESTRICTION	MODEL/RESTRICTION	MODEL/RESTRICTION	FROM-TO
CONT'D					
00 INT-		NA0 NA1 NA2 BLACK			
58-335A		CLIP			
※FB01-58-335	1				
58-370		HANDLE,REGULATOR			
B092-58-580	2	BASE, (W/O POWER WIND.)			
00 INT-		NA0 NA1 NA2 BLACK			
58-375		ESCUTCHEON			
B001-58-582A	2	BASE, (W/O POWER WIND.)			
00 INT-		NA0 NA1 NA2 BLACK			
58-420		HANDLE(R),OUT.			
NA01-58-410D	1				
58-420Z		HANDLE(L),OUT.			
NA01-59-410D	1				
58-505C		SCREW,WINDOW REGULATOR			
B092-58-505	6				
58-505E		CAP			
B092-58-355	2	BASE, (W/O POWER WIND.)			
58-560		REGULATOR(R),WINDOW			
NA01-58-560C	1				-2A01
AN(NA01-58-560D)					
NA02-58-560C	1				-2A01
AN(NA02-58-560D)					
NA01-58-560D	1	BASE, (W/O POWER WIND.)			2A01-
NA02-58-560D	1	PKG-B, RICO-20TH-ANV (W/POWER WIND.)			2A01-
58-560Z		REGULATOR(L),WINDOW			
NA01-59-560C	1				-2A01
AN(NA01-59-560D)					
NA02-59-560C	1				-2A01
AN(NA02-59-560D)					

2A01 NA351※-403707

CAT. AUNA03-04

1994-10

5830 FRONT DOOR MECHANISMS

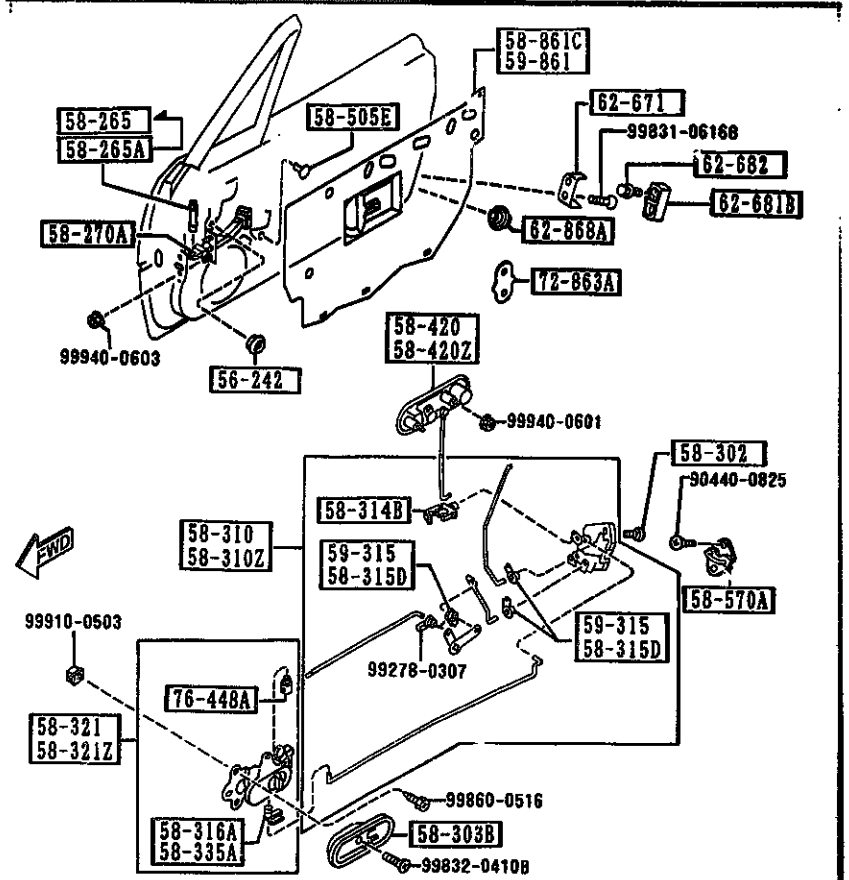

AUNA03

PART NO.	QTY	MODEL/RESTRICTION	MODEL/RESTRICTION	MODEL/RESTRICTION	FROM-TO
CONT'D					
NA01-59-560D	1	BASE, (W/O POWER WIND.)			2A01-
NA02-59-560D	1	PKG-B, RICO-20TH-ANV (W/POWER WIND.)			2A01-
58-565		RUBBER,STOPPER			
HQ30-58-565	2	PKG-B, RICO-20TH-ANV (W/POWER WIND.)			
58-5(		GASKET,WINDOW REGULATOR			
B092-58-569	2	BASE, (W/O POWER WIND.)			
58-570A		STRIKER			
B001-58-361A	2				
58-586		RING,SNAP			
B001-58-585	2	BASE, (W/O POWER WIND.)			
58-608		PAD			
B092-58-863A	2	BASE, (W/O POWER WIND.)			
58-861C		SCREEN(R),FRONT DOOR			
NA01-58-861A	1	BASE, (W/O POWER WIND.)			
NA02-58-861A	1	PKG-B, RICO-20TH-ANV (W/POWER WIND.)			
59-315		CLIP			
0030-59-315	3				
59-861		SCREEN(L),FRONT DOOR			
NA01-59-861A	1	BASE, (W/O POWER WIND.)			
NA02-59-861A	1	PKG-B, RICO-20TH-ANV (W/POWER WIND.)			
62-671		DOVETAIL,LIFT GATE			
S084-62-671	2				

2A01 NA351X-403707

5830 FRONT DOOR MECHANISMS

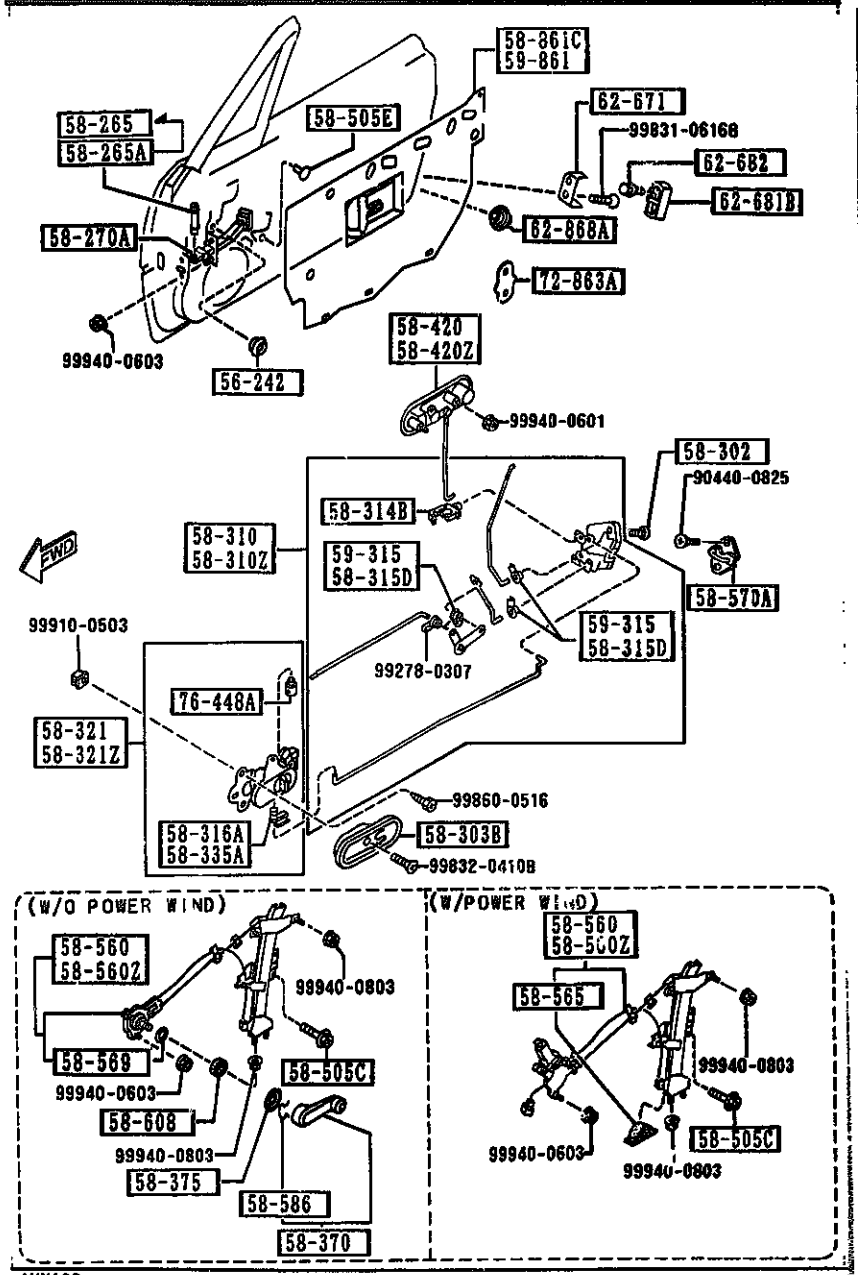

AUNA03

PART NO.	QTY	MODEL/RESTRICTION	MODEL/RESTRICTION	MODEL/RESTRICTION	FROM-TO
62-681B		WEDGE,DOOR-FRONT			
NA01-62-681	2				
62-682		SCREW,WEDGE-LIFT GATE			
B216-62-682	4				
62-868A		COVER,HOLE-LIFT GATE			
B499-62-868	2				
72-863A		PAD			
H260-72-864B	2				
76-448A		CLIP			
G030-76-448	2				

5840 FRONT DOOR TRIMS & RELATED PARTS

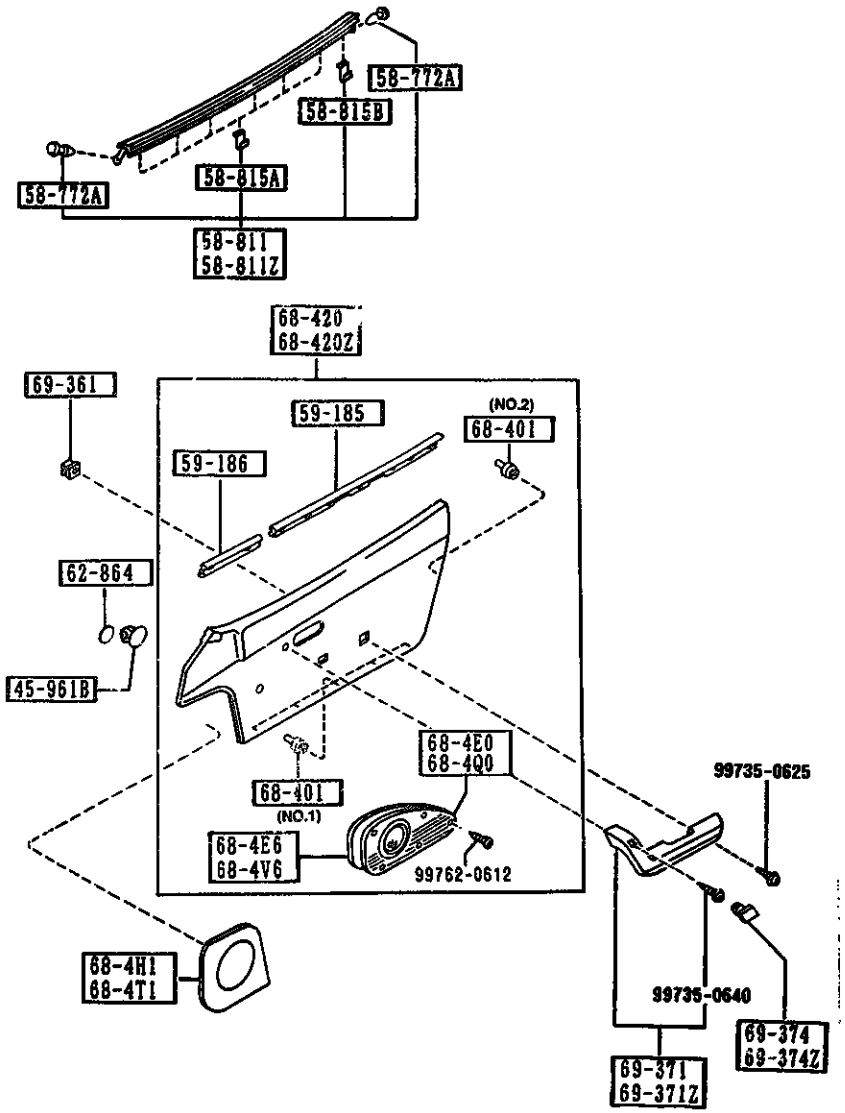

AUNA03

PART NO.	QTY	MODEL/RESTRICTION	MODEL/RESTRICTION	MODEL/RESTRICTION	FROM-TO
45-961B		CAP			
H002-45-961	2	(W/POWER WIND.,W/STEEL KICK P.)			2804-
58-772A		FASTENER			
1011-58-772	4				
58-811		WEATHERSTRIP(R),OUT.			
NA01-58-810D	1				
58-811Z		WEATHERSTRIP(L),OUT.			
NA01-59-810D	1				
58-815A		CLIP,WEATHERSTRIP-OUTER			
NA01-58-815	12				
58-815B		CLIP'A',WEATHERSTRIP-OUT			
B157-58-815	2				
59-185		WEATHERSTRIP NO.1			
NA01-58-821	2				
59-186		WEATHERSTRIP NO.2			
NA02-58-821	2				
62-864		TAPE,PROTECTOR-STOPPER			
G043-62-864	2				-3410
AN(G043-62-864A)					
G043-62-864A	2	OPT, SPECIAL-ED, (W/STEEL KICK PLATE)			3410-
68-4E0		PLATE(R),KICK-D.TRIM			
N020-68-4E1	1	OPT, SPECIAL-ED, (W/STEEL KICK PLATE)			
68-4E6		PLATE(R)			
N020-68-4E6	1	OPT, SPECIAL-ED, (W/STEEL KICK PLATE)			
68-4H1		GRILLE(R),SPEAKER			
NA01-68-4H0	1	BASE, RICO-20TH-ANV.			

2804 NA351*-400128
3410 NA351*-419040

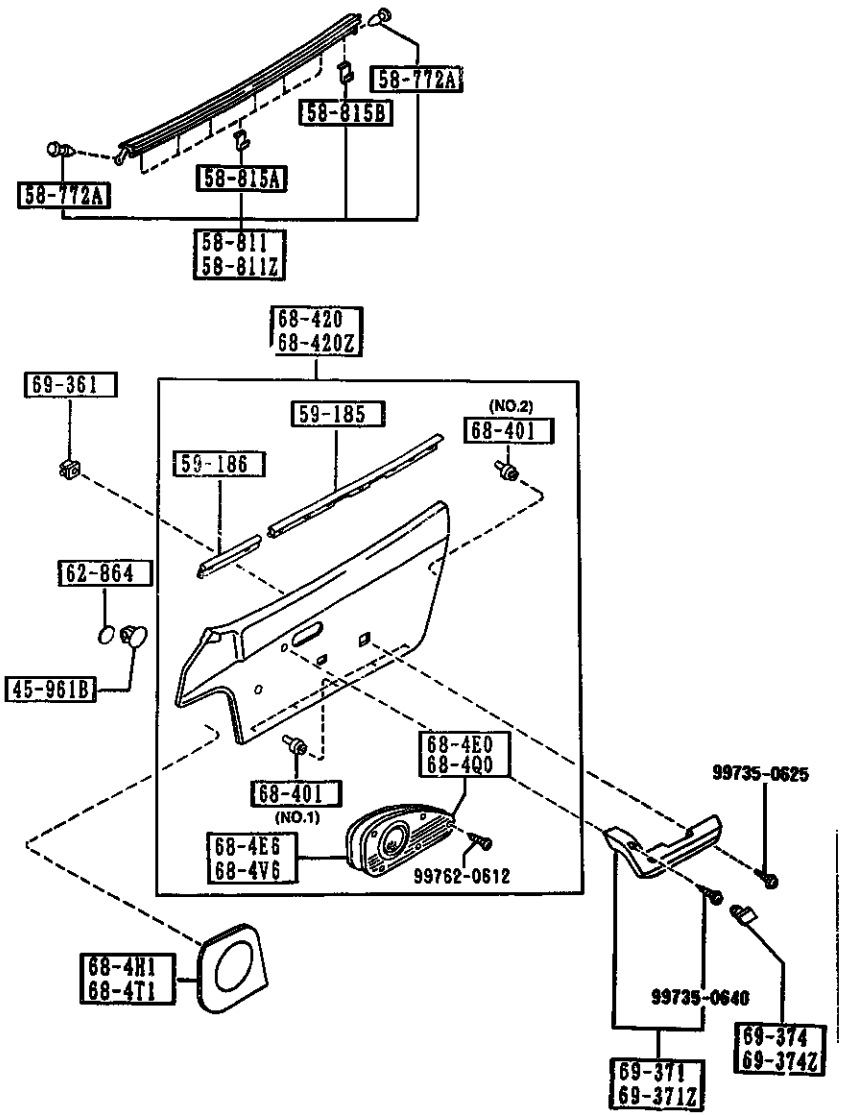

AUNA03

PART NO.	QTY	MODEL/RESTRICTION	MODEL/RESTRICTION	MODEL/RESTRICTION	FROM-TO
CONT'D					
		, (W/PLASTIC KICK PLATE)			
00	INT-	NA0 NA1 NA2 BLACK			
88	INT-	NA1 TAN/BLACK			
68-4Q0		PLATE(L),KICK-D.TRIM			
N020-68-4V1	1	OPT, SPECIAL-ED, (W/STEEL KICK PLATE)			
68-4T1		GRILLE(L),SPEAKER			
NA01-68-4W0	1	BASE, RICO-20TH-ANV. , (W/PLASTIC KICK PLATE)			
00	INT-	NA0 NA1 NA2 BLACK			
88	INT-	NA1 TAN/BLACK			
68-4V6		PLATE(L)			
N020-68-4V6	1	OPT, SPECIAL-ED, (W/STEEL KICK PLATE)			
68-401		FASTENER,DOOR TRIM			
B100-68-401	10	BASE, RICO-20TH-ANV. , (ILLUST. NO.1) (W/PLASTIC KICK PLATE)			
B100-68-401	16	(ILLUST. NO.1)			
W201-68-401	12	(ILLUST. NO.2)			
68-420		TRIM(R),DOOR			
NA01-68-420C	1	BASE, (W/PLASTIC K.PLATE,W/O P.WIND, W/O SENSORY SOUND)			
00	INT-	NA0 BLACK			
17	INT-	NA2 RED			
88	INT-	NA1 BLACK/TAN			
NA02-68-420C	1	PKG-B, (W/PLASTIC K.PLATE,W/P.WIND, W/O SENSORY SOUND)			
00	INT-	NA0 BLACK			

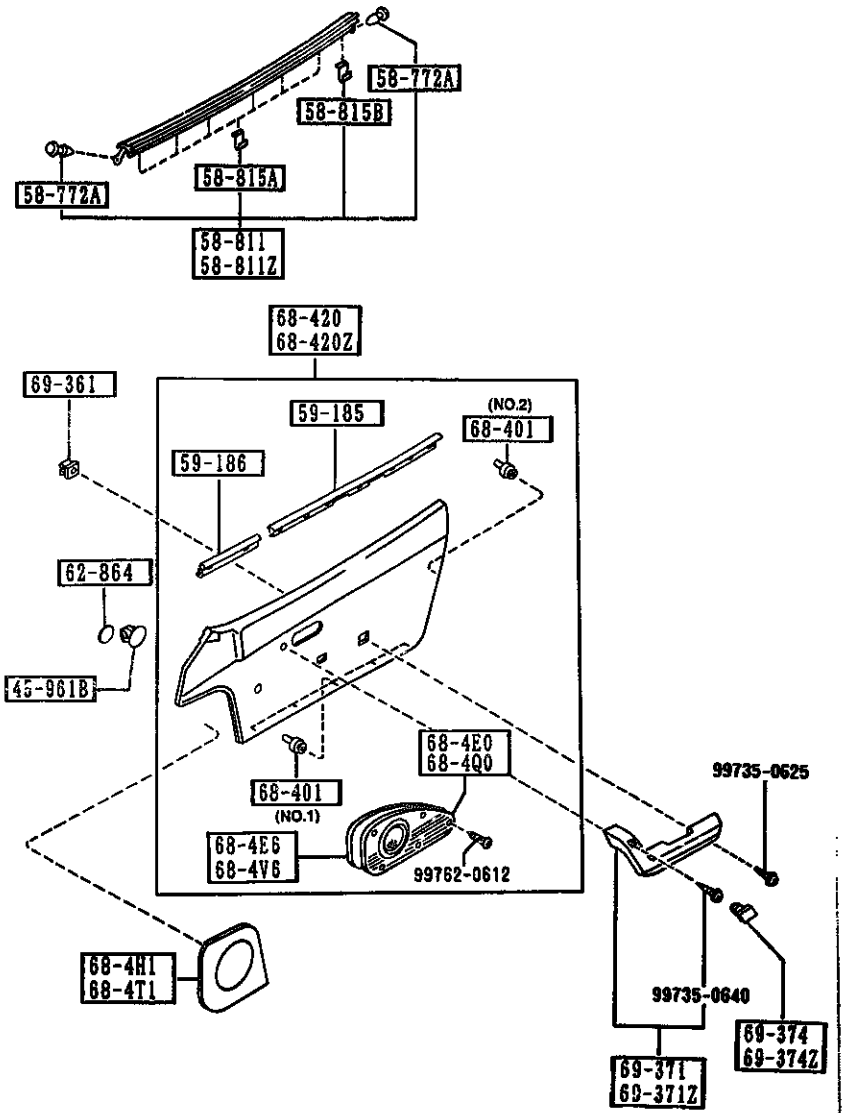

AUNA03

PART NO.	QTY	MODEL/RESTRICTION	MODEL/RESTRICTION	MODEL/RESTRICTION	FROM-TO
CONT'D					
17	INT-	NA2 RED			
88	INT-	NA1 BLACK/TAN			
N018-68-420A	1	OPT, (W/PLASTIC K.PLATE,W/O P.WIND, W/SENSORY SOUND)			
00	INT-	NA0 BLACK			
17	INT-	NA2 RED			
88	INT-	NA1 TAN			
N019-68-420A	1	OPT, (W/PLASTIC KICK PLATE,W/P.WIND, W/SENSORY SOUND))			
00	INT-	NA0 BLACK			
17	INT-	NA2 RED			
88	INT-	NA1 TAN			
N020-68-420A	1	OPT, RICO-20TH-ANV., SPECIAL-ED, (W/STEEL KICK PLATE, W/P.WIND, W/O SENSORY SOUND)			-2A01
00	INT-	NA0 BLACK			
17	INT-	NA2 RED			
88	INT-	NA1 TAN			
N021-68-420B	1	OPT, SPECIAL-ED, (W/STEEL KICK PLATE, W/P.WIND, W/SENSORY SOUND)			-2A01
00	INT-	NA0 BLACK			
17	INT-	NA2 RED			
88	INT-	NA1 TAN			
N020-68-420B	1	OPT, RICO-20TH-ANV., SPECIAL-ED, (W/STEEL KICK PLATE, W/P.WIND, W/O SENSORY SOUND)			2A01-
00	INT-	NA0 BLACK			
17	INT-	NA2 RED			
88	INT-	NA1 TAN			
N021-68-420C	1	OPT, SPECIAL-ED, (W/STEEL KICK PLATE, W/P.WIND, W/SENSORY SOUND)			2A01-
00	INT-	NA0 BLACK			

2A01 NA351K-401954

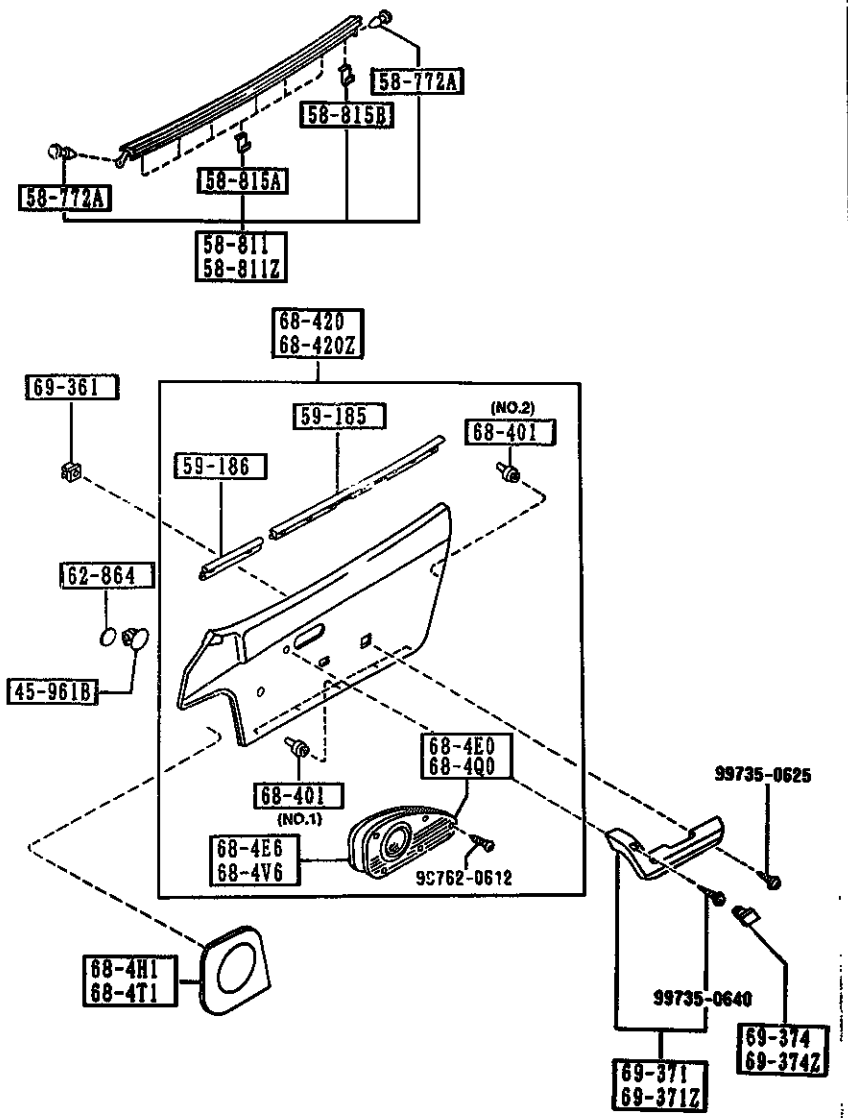

AUNA03

PART NO.	QTY	MODEL/RESTRICTION	MODEL/RESTRICTION	MODEL/RESTRICTION	FROM-TO
CONT'D					
17	INT-	NA2 RED			
88	INT-	NA1 TAN			
68-420Z		TRIM(L),DOOR			
NA01-68-450C	1	BASE, (W/PLASTIC K.PLATE,W/O P.WIND, W/O SENSORY SOUND)			
00	INT-	NA0 BLACK			
17	INT-	NA2 RED			
88	INT-	NA1 BLACK/TAN			
NA02-68-450C	1	PKG-B, (W/PLASTIC K.PLATE,W/P.WIND, W/O SENSORY SOUND)			
00	INT-	NA0 BLACK			
17	INT-	NA2 RED			
88	INT-	NA1 BLACK/TAN			
N018-68-450A	1	OPT, (W/PLASTIC K.PLATE,W/O P.WIND, W/SENSORY SOUND)			
00	INT-	NA0 BLACK			
17	INT-	NA2 RED			
88	INT-	NA1 TAN			
N019-68-450A	1	OPT, (W/PLASTIC KICK PLATE,W/P.WIND, W/SENSORY SOUND)			
00	INT-	NA0 BLACK			
17	INT-	NA2 RED			
88	INT-	NA1 TAN			
N020-68-450A	1	OPT, RICO-20TH-ANV., SPECIAL-ED, (W/STEEL KICK PLATE, W/P.WIND, W/O SENSORY SOUND)			-2A01
00	INT-	NA0 BLACK			
17	INT-	NA2 RED			
88	INT-	NA1 TAN			
N021-68-450B	1	OPT, SPECIAL-ED, (W/STEEL KICK PLATE, W/P.WIND, W/SENSORY SOUND)			-2A01

2A01 NA351*-401954

CAT. AUNA03-04

1994-10

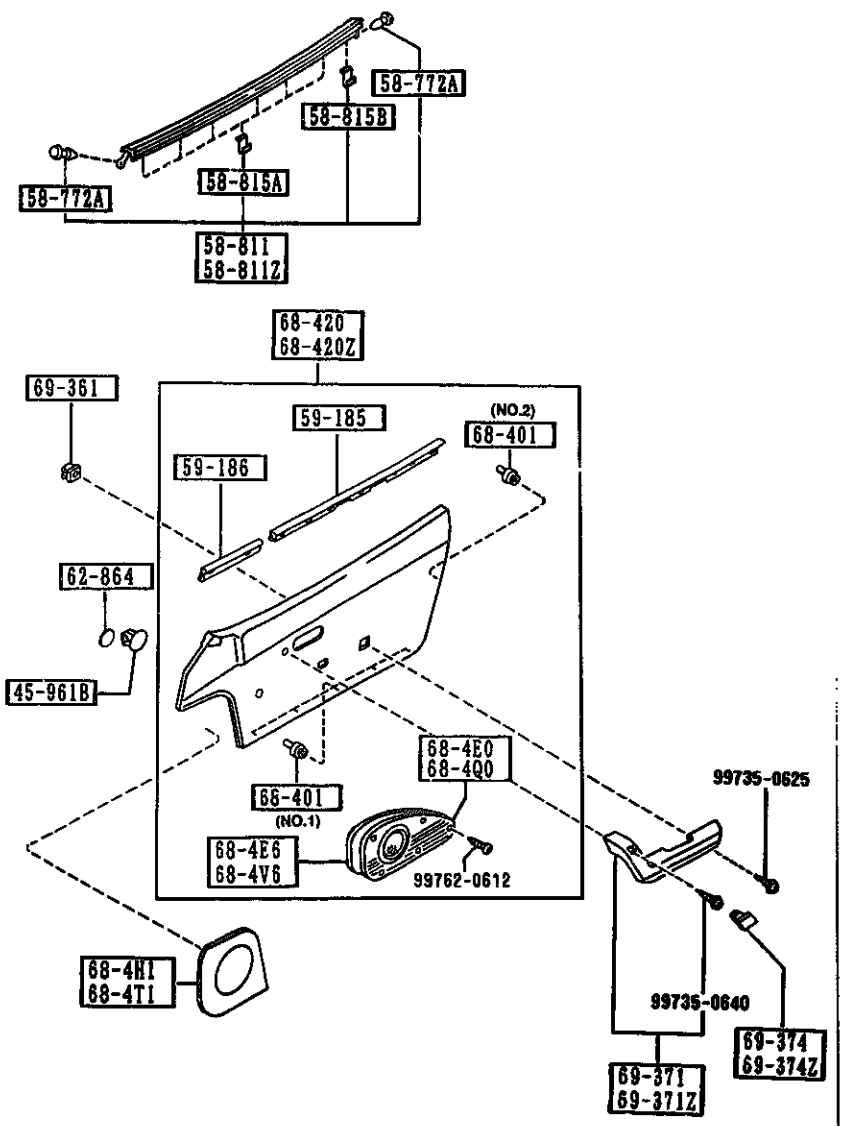

AUNA03

PART NO.	QTY	MODEL/RESTRICTION	MODEL/RESTRICTION	MODEL/RESTRICTION	FROM-TO
CONT'D					
00	INT-	NA0 BLACK			
17	INT-	NA2 RED			
88	INT-	NA1 TAN			
N020-68-450B	1	OPT, RICO-20TH-ANV., SPECIAL-ED, (W/STEEL KICK PLATE, W/P.WIND, W/O SENSOR Y SOUND)			2A01-
00	INT-	NA0 BLACK			
17	INT-	NA2 RED			
88	INT-	NA1 TAN			
N021-68-450C	1	OPT, SPECIAL-ED, (W/STEEL KICK PLATE, W/P.WIND, W/SENSORY SOUND)			2A01-
00	INT-	NA0 BLACK			
17	INT-	NA2 RED			
88	INT-	NA1 TAN			
69-361		GROMMET,SCREW			
B316-69-361	6				
69-371		REST(R),ARM			
BF70-69-370C	1				
00	INT-	NA0 BLACK			
18	INT-	NA2 RED			
88	INT-	NA1 TAN			
69-371Z		REST(L),ARM			
BF70-69-390C	1				
00	INT-	NA0 BLACK			
18	INT-	NA2 RED			
88	INT-	NA1 TAN			
69-374		CAP(R),PULL HANDLE			
BF70-69-372	1				
00	INT-	NA0 BLACK			
18	INT-	NA2 RED			
88	INT-	NA1 TAN			

2A01 NA351*-401954

CAT. AUNA03-04 1994-10

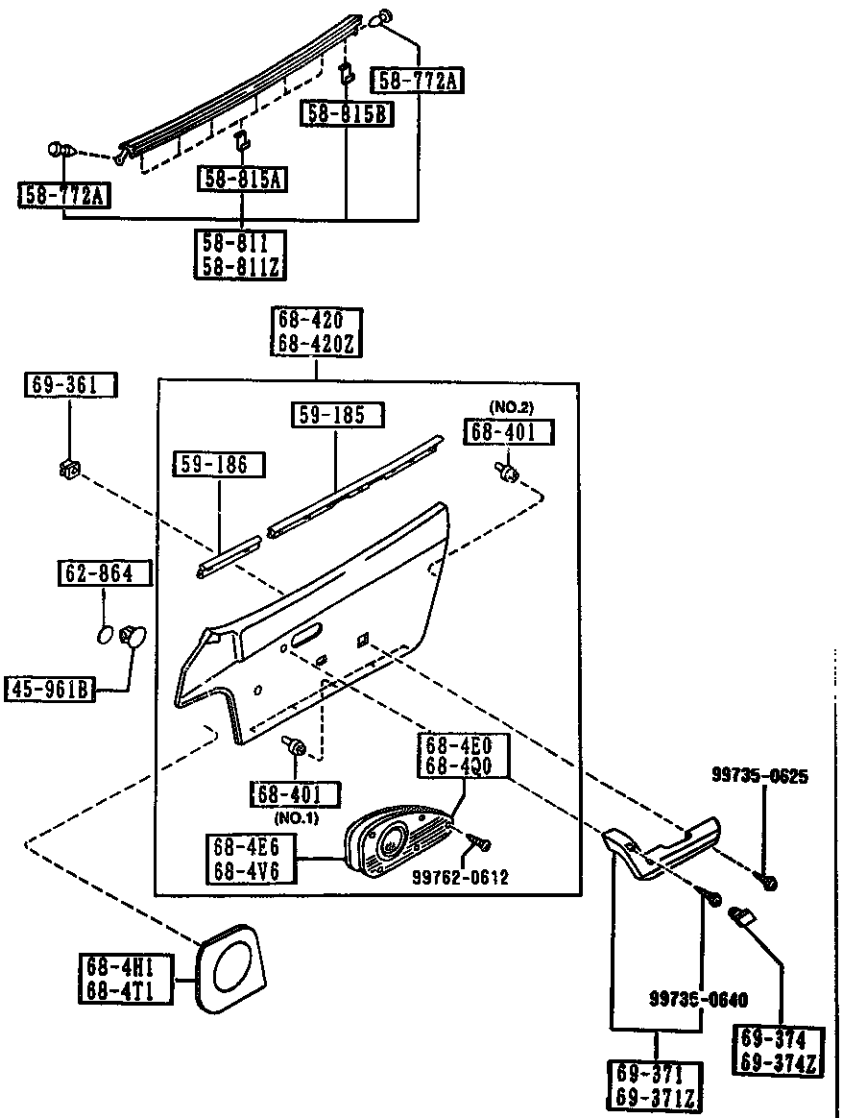

AUNA03

5840 -6 * FRONT DOOR TRIMS & RELATED PARTS

PART NO.	QTY	MODEL/RESTRICTION	MODEL/RESTRICTION	MODEL/RESTRICTION	FROM-TO
69-374Z		CAP(L),PULL HANDLE			
BF70-69-392	1				
00	INT-	NA0 BLACK			
18	INT-	NA2 RED			
88	INT-	NA1 TAN			

CAT. AUNA03-04 1994-10

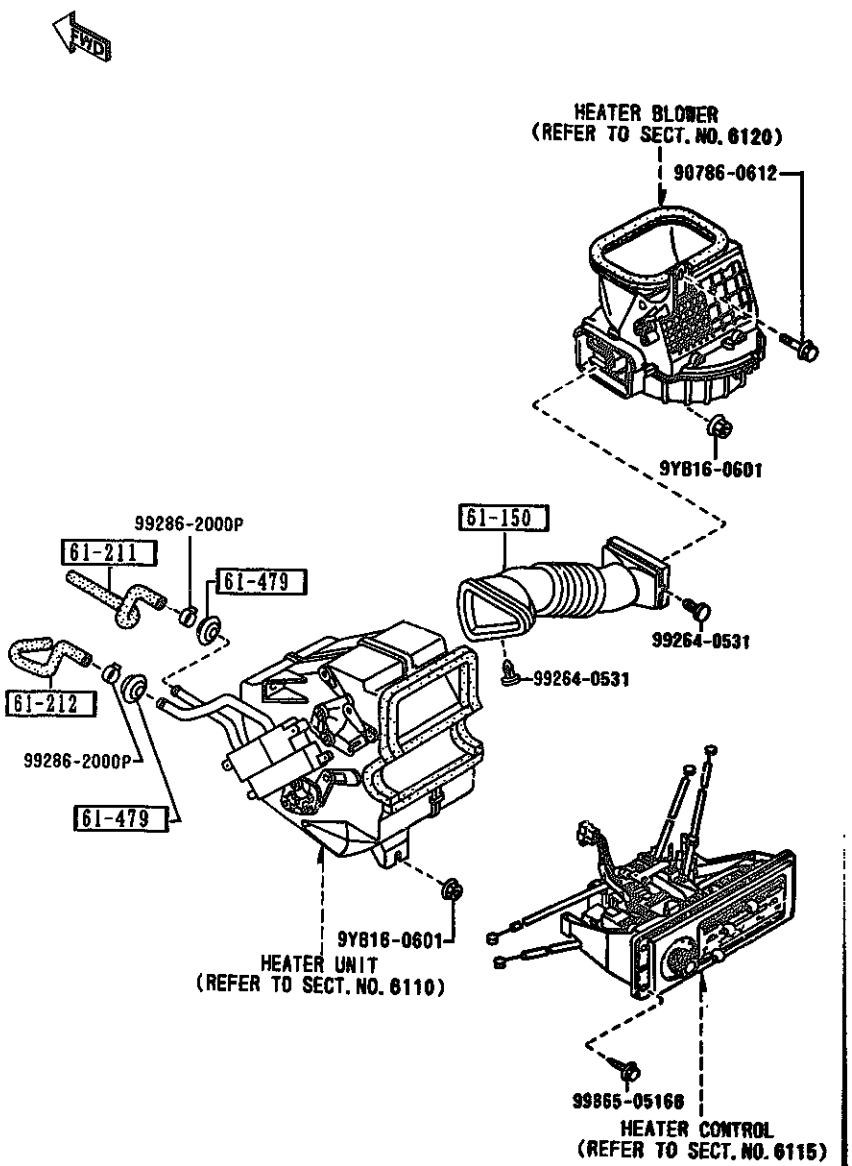

AUNA03

6100 -1 * HEATER

PART NO.	QTY	MODEL/RESTRICTION	MODEL/RESTRICTION	MODEL/RESTRICTION	FROM-TO
61-150		DUCT,AIR			
NA01-61-150A	1				
61-211		HOSE NO.1,WATER			
NA01-61-211	1				
61-212		HOSE NO.2,WATER			
N007-61-212	1				
61-479		GROMMET			
8871-61-219A	2				

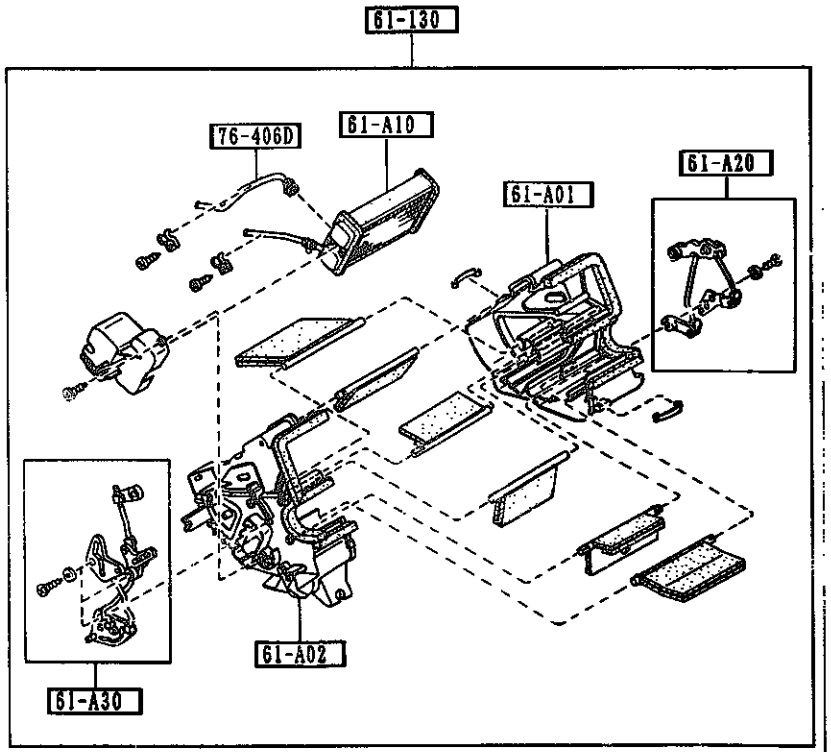

6110 -1 * HEATER UNIT COMPONENTS

PART NO.	QTY	MODEL/RESTRICTION	MODEL/RESTRICTION	MODEL/RESTRICTION	FROM-TO
61-A01		CASE'A',HEATER UNIT			
NA01-61-A01	1				
61-A02		CASE'B',HEATER UNIT			
NA01-61-A02	1				
61-A10		CORE,HEATER UNIT			
NA01-61-A10	1				
61-A20		LINK SET,TEMP			
NA01-61-A20	1				
61-A30		LINK SET,MODE			
NA01-61-A30	1				
61-130		HEATER UNIT			
NA01-61-130A	1				
76-406D		PIPE,HEATER UNIT			
NA01-61-A15	1				

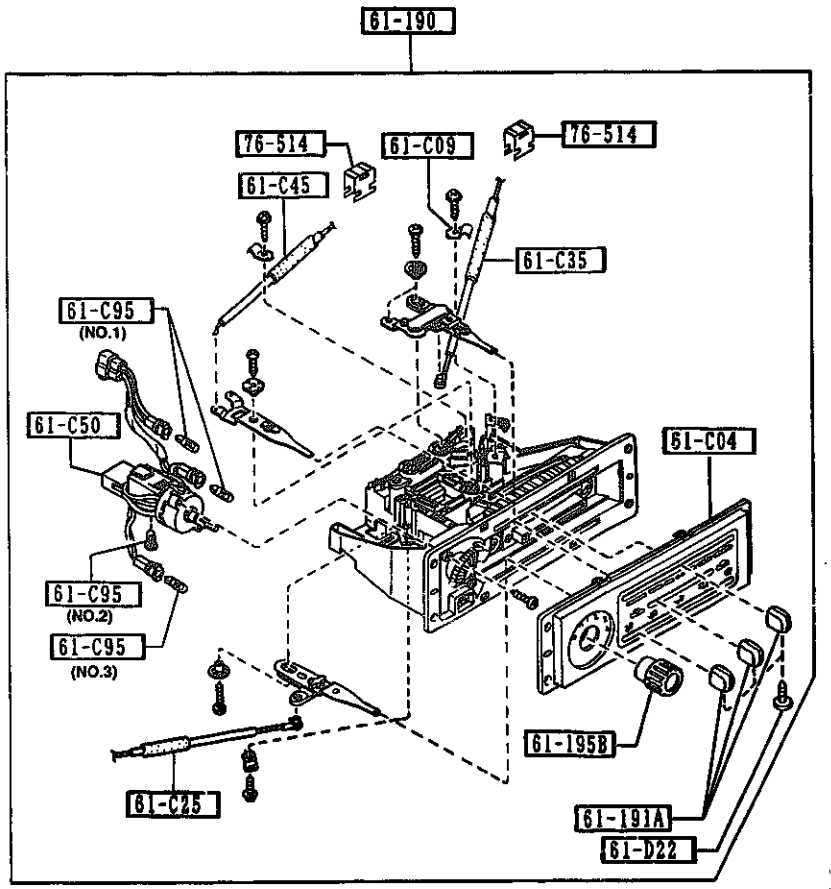

AUNA03

6115 -1 HEATER CONTROLS COMPONENTS

PART NO.	QTY	MODEL/RESTRICTION	MODEL/RESTRICTION	MODEL/RESTRICTION	FROM-TO
61-C04		PANEL,PLATE-MODE CONTROL			
NA01-61-C04A	1	(W/O DETACHABLE TOP)			
NA02-61-C04A	1	RICO-20TH-ANV., (W/DETACHABLE TOP)			
61-C09		CLIP,HEATER CONTROL			
H260-61-C09	1				
61-C25		WIRE,TEMP. CONTROL			
NA01-61-C25	1				
61-C35		WIRE,MODE CONTROL			
NA01-61-C35	1				
61-C45		WIRE,RECYCLE & FRESH			
NA01-61-C45	1				
61-C50		SWITCH,FAN-HEATER CONTROL			
NA01-61-C50	1				
61-C95		BULB,MODE CONTROL			
NA01-61-C95	2	(ILLUST. NO.1)			
NA02-61-C95	1	(ILLUST. NO.2)			
NA03-61-C95	1	(ILLUST. NO.3)			
61-D22		SCREW,RR HEATER UNIT			
NA01-61-D22	3				
61-190		CONTROL,HEATER			
NA01-61-190B	1	(W/O DETACHABLE TOP)			
NA02-61-190A	1	RICO-20TH-ANV., (W/DETACHABLE TOP)			
61-191A		KNOB NO.1			
NA01-61-191	3				
61-195B		KNOB,FAN SWITCH			
NA01-61-195	1				

CAT. AUNA03-04

1994-10

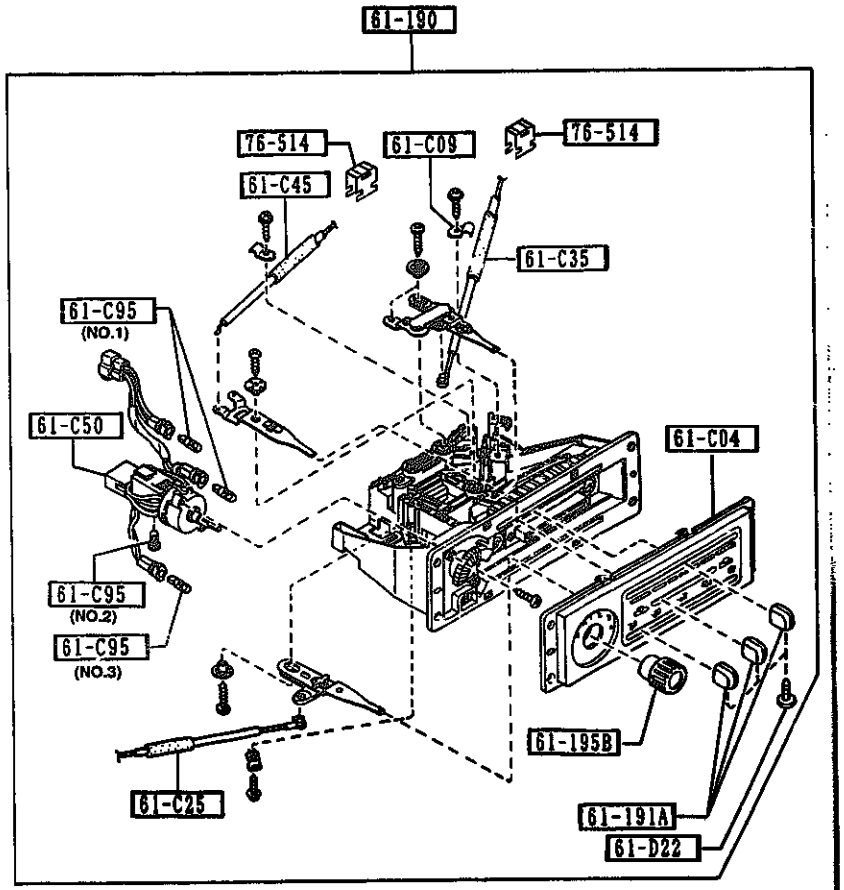

PART NO.	QTY	MODEL/RESTRICTION	MODEL/RESTRICTION	MODEL/RESTRICTION	FROM-TO
76-514		CLIP			
8001-76-526	2				

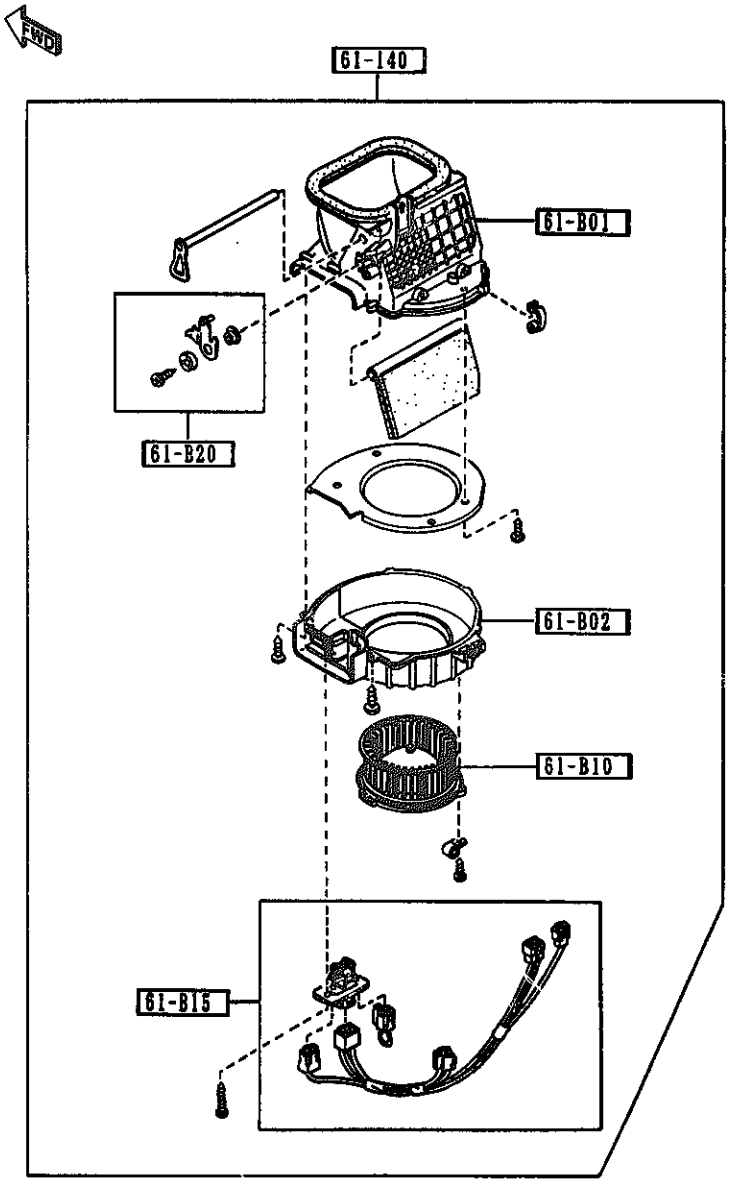

AUNA03

6120 -1 * HEATER BLOWER COMPONENTS

PART NO.	QTY	MODEL/RESTRICTION	MODEL/RESTRICTION	MODEL/RESTRICTION	FROM-TO
61-B01		CASE'A',BLOWER UNIT			
NA01-61-B01	1				
61-B02		CASE'B',BLOWER UNIT			
NA01-61-B02	1				
61-B10		MOTOR,FAN-BLOWER UNIT			
NA01-61-B10	1				
61-B15		RESISTOR,BLOWER UNIT			
NA01-61-B15	1				
61-B20		LINK,RECYCLE & FRESH			
NA01-61-B20	1				
61-140		BLOWER UNIT			
NA01-61-140A	1				

CAT. AUNA03-04 1994-10

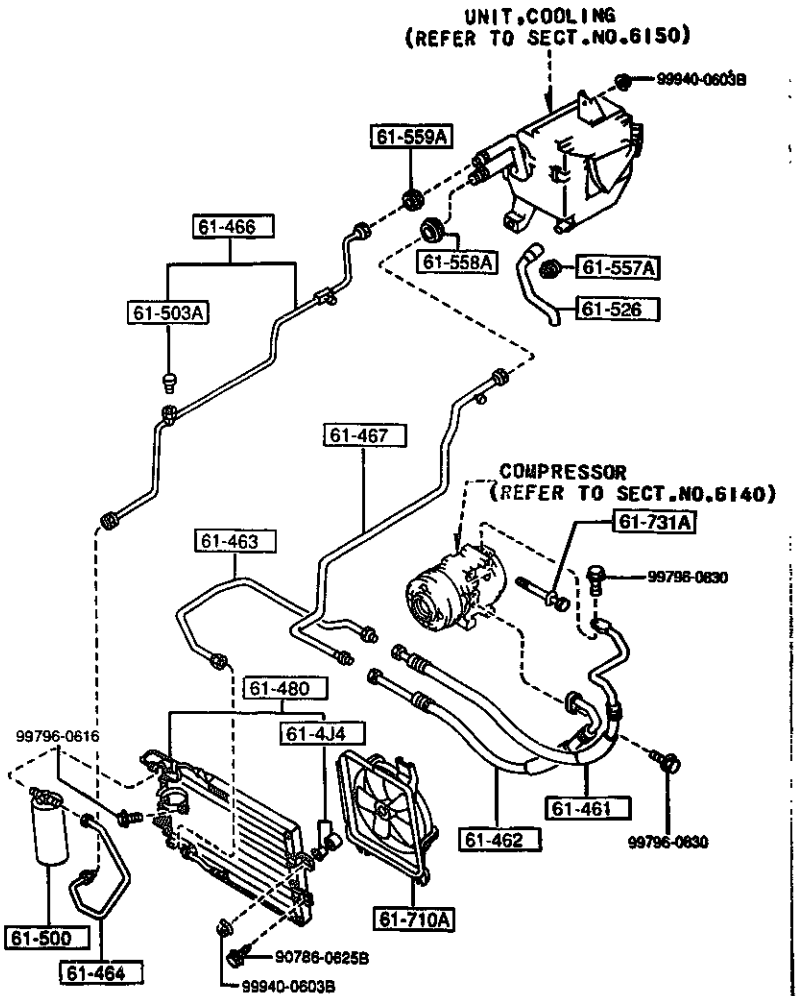

AUNA03

(CONT'D)

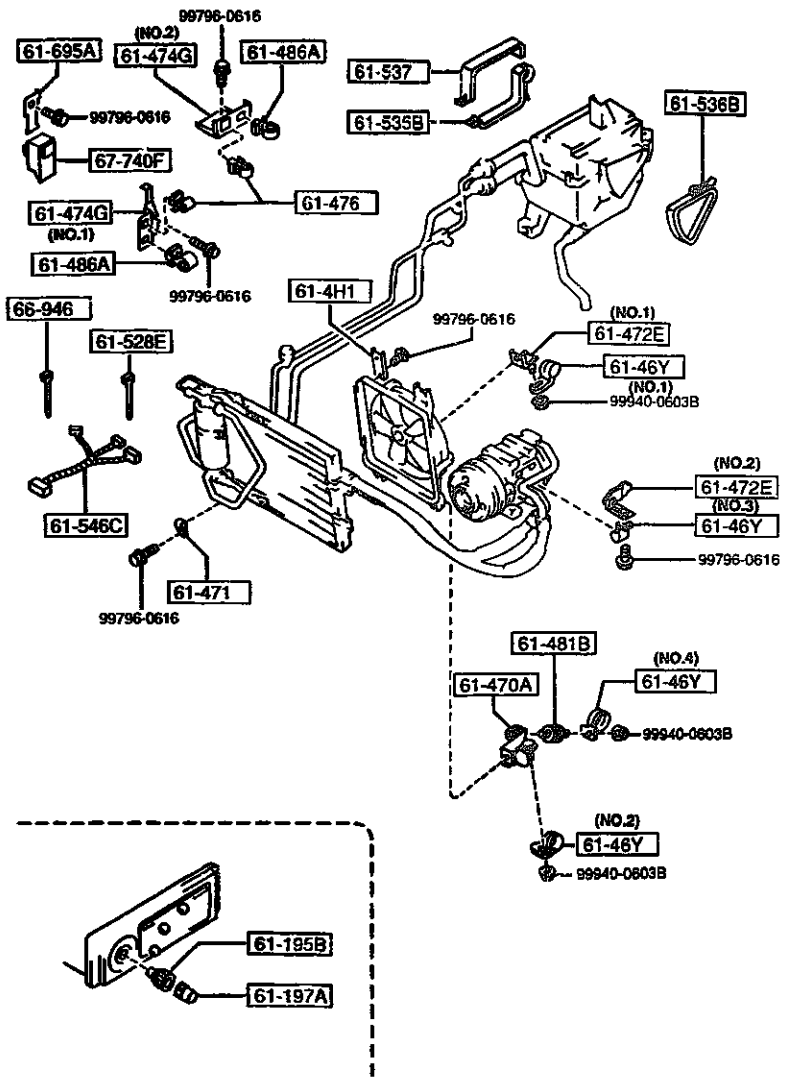

AUNA03

6130 AIR CONDITIONER (1/2)

(HOSE & CONDENSER) (THIS ILLUSTRATION CONSISTS OF 2 PAGES)

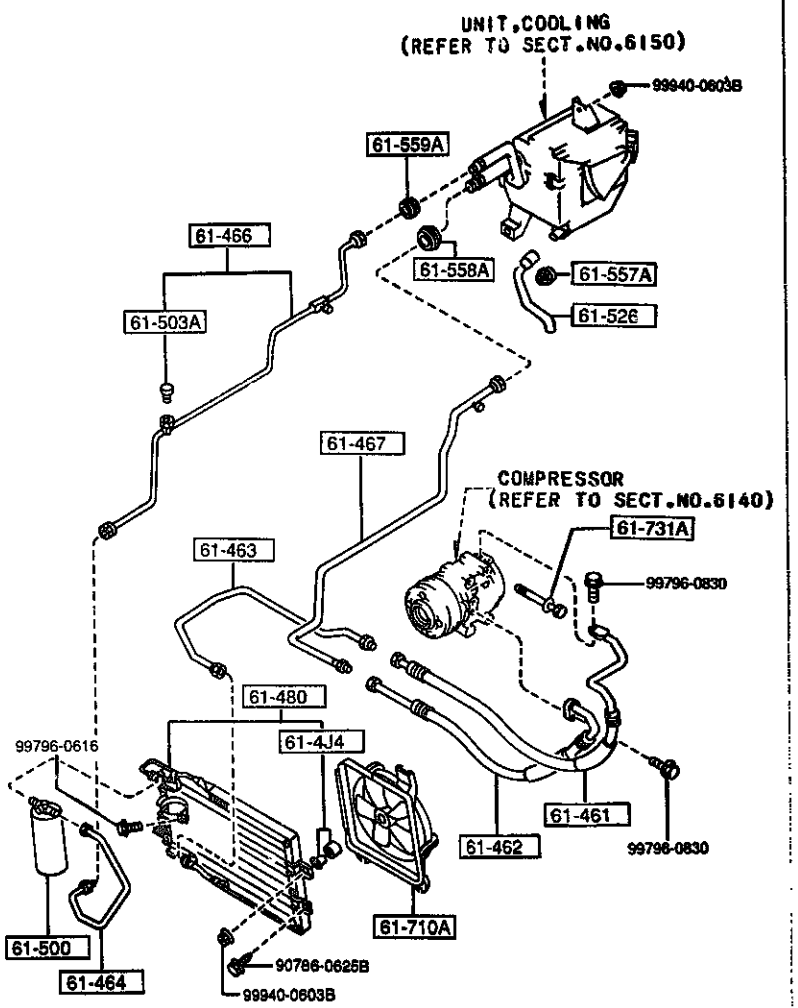

PART NO.	QTY	MODEL/RESTRICTION	MODEL/RESTRICTION	MODEL/RESTRICTION	FROM-TO
61-1958		KNOB,FAN SWITCH			
NA01-61-193	1				
61-197A		KNOB,AIR CON.			
NA01-61-197	1				
61-4H1		BRACKET,HOSE			
NA01-61-4H1	1	(A.			
61-4J4		RUBBER,INS.-CONDR			
NA01-61-4J4	4	(A)			
61-46Y		CLIP,PIPE			
BR71-61-46Y	1	(A) (ILLUST. NO.1)			
BR76-61-46Y	1	(A) (ILLUST. NO.2)			
BR77-61-46Y	1	(A) (ILLUST. NO.3)			
NA01-61-46YB	1	(A) (ILLUST. NO.4)			
61-461		HOSE,FLEXIBLE-HIGH			
NA01-61-461B	1	(A)			
61-462		HOSE,FLEXIBLE-LOW			
NA01-61-462C	1	(A)			
61-463		PIPE NO.1,COOLER			
NA02-61-466C	1	(A)			
61-464		PIPE NO.2,COOLER			
NA01-61-466	1	(A)			
61-466		PIPE NO.4,COOLER			
NA01-61-46X	1	(A)			

(BRACKET & CLIP)

(THIS ILLUSTRATION CONSISTS OF 2 PAGES)

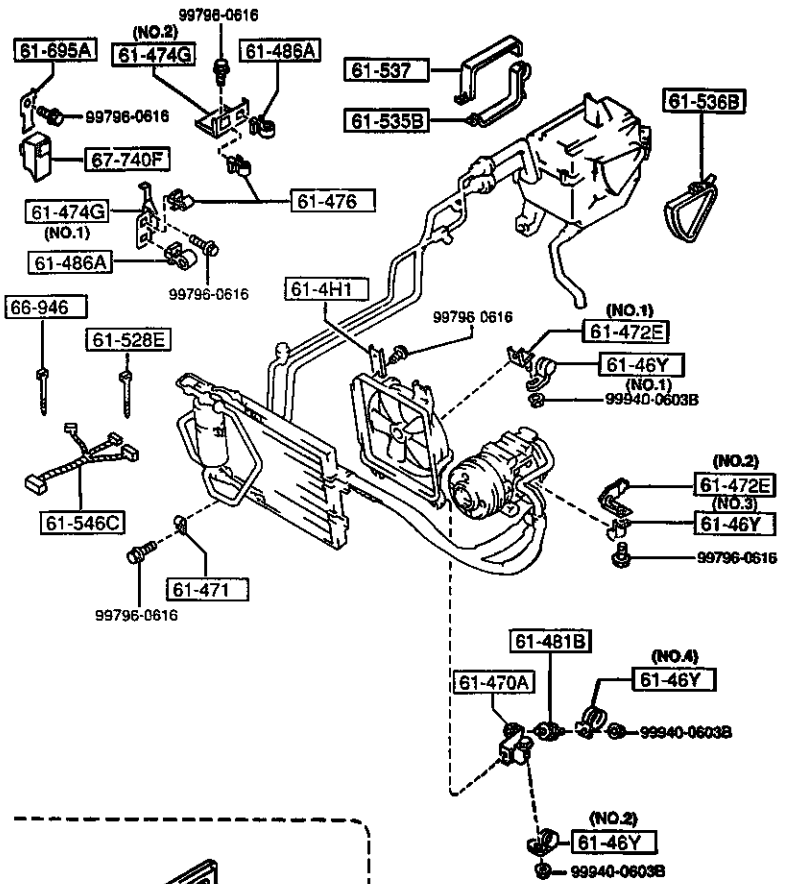

AUNA03

6130 -2 AIR CONDITIONER

PART NO.	QTY	MODEL/RESTRICTION	MODEL/RESTRICTION	MODEL/RESTRICTION	FROM-TO
61-467		PIPE NO.5,COOLER			
NA01-61-468A	1	(A)			
61-470A		BRACKET,HOSE			
NA02-61-471A	1	(A)			
61-471		CLIP,PIPE			
BF67-61-471	1	(A)			
61-472E		BRACKET,CLAMP			
NA01-61-472	1	(A) (ILLUST. NO.1)			
NA02-61-472A	1	(A) (ILLUST. NO.2)			
61-474G		BRACKET,PIPE			
NA01-61-474	1	(A) (ILLUST. NO.1)			
NA02-61-474A	1	(A) (ILLUST. NO.2)			
61-476		CLIP			
NA02-61-476	2	(A)			
61-480		CONDENSER			
NA01-61-480	1	(A)			
61-481B		RUBBER,INSULATOR			
NA01-61-487 AN(FC20-61-481)	1				-3301
FC20-61-481	1	(A)			3301-
61-486A		CLIP			
UB39-61-486A	2				
61-500		TANK,LIQUID			
NA01-61 500	1	(A)			

3301 NA351*-416214

CAT. AUNA03-04 1994-10

(HOSE & CONDENSER) (THIS ILLUSTRATION CONSISTS OF 2 PAGES)

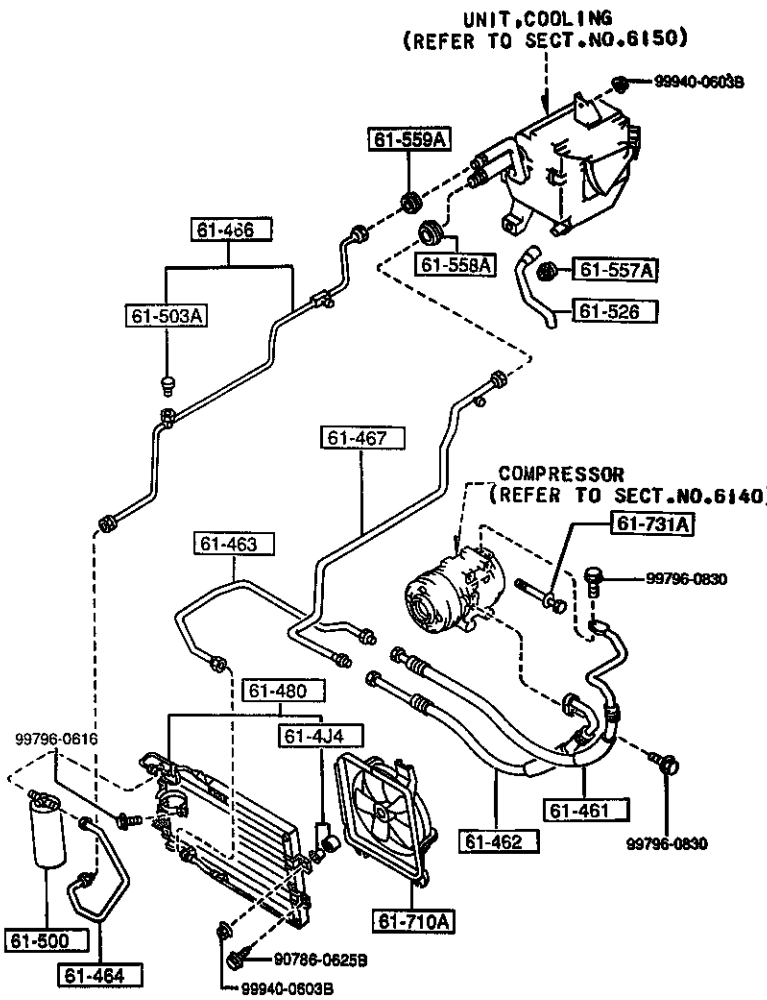

AUNA03 (CONT'D)

PART NO.	QTY	MODEL/RESTRICTION	MODEL/RESTRICTION	MODEL/RESTRICTION	FROM-TO
61-503A NA01-61-503	1	SWITCH,PRESS-COOLER PIPE (A)			
61-526 NA01-61-526	1	HOSE,DRAIN (A)			
61-528E NA01-61-435	2	BAND (G)			
61-535B NA01-61-52YA	1	PLATE NO.1,SEAL (A)			
61-536B NA01-61-52Z	1	PLATE NO.2,SEAL (A)			
61-537 NA01-61-529	1	PLATE NO.3,SEAL (A)			
61-546C NA01-61-546C	1	HARNESS,WIRE (A)			
61-557A FB04-61-557	1	GROMMET (A)			
61-558A BF67-61-558	1	GROMMET (A)			
61-559A BF67-61-559	1	GROMMET (A)			
61-695A NA01-61-695	1	BRACKET,RELAY (A)			
61-710A		FAN,CONDENSER			

(BRACKET & CLIP) (THIS ILLUSTRATION CONSISTS OF 2 PAGES)

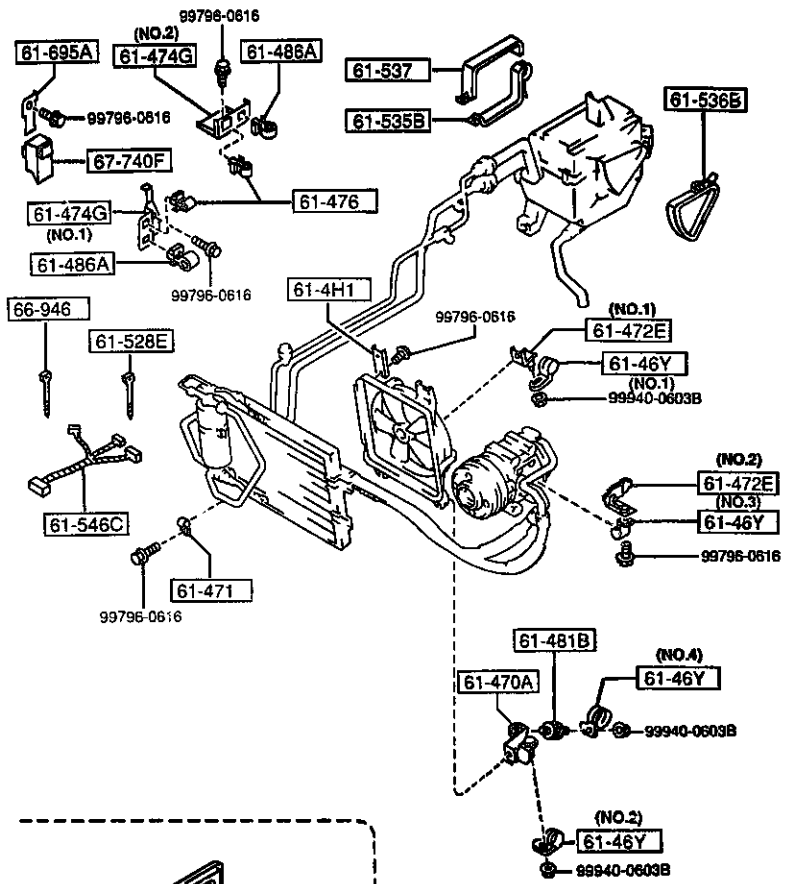

AUNA03

6130 -4 * AIR CONDITIONER

PART NO.	QTY	MODEL/RESTRICTION	MODEL/RESTRICTION	MODEL/RESTRICTION	FROM-TO
CONT'D					
NA01-61-710	1	(A)			
61-731A		BOLT,AIR CON.			
B111-61-731	4				
66-946		BAND			
NA02-61-435	1	(A)			
67-740F		CONTROL,COOLANT FAN			
B462-67-740	1				

CAT. AUNA03-04 1994-10

6135 -1 * O RING SET,PIPING

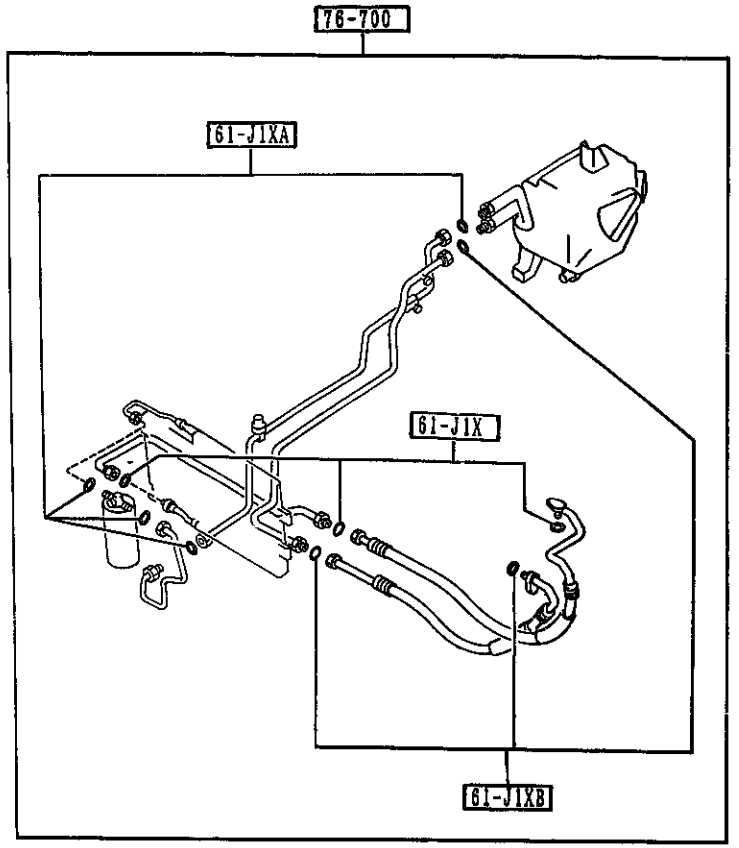

PART NO.	QTY	MODEL/RESTRICTION	MODEL/RESTRICTION	MODEL/RESTRICTION	FROM-TO
61-J1X GJY1-61-J1X	1	RING,'O'-NO.1 (A)			
61-J1XA GJY2-61-J1X	1	RING,'O'-NO.2 (A)			
61-J1XB GJY3-61-J1X	1	RING,'O'-NO.3 (A)			
76-700 NA01-76-700	1	RING SET,'O'-AIR CON (A)			

6140 COMPRESSOR COMPONENTS (AIR CONDITIONER)

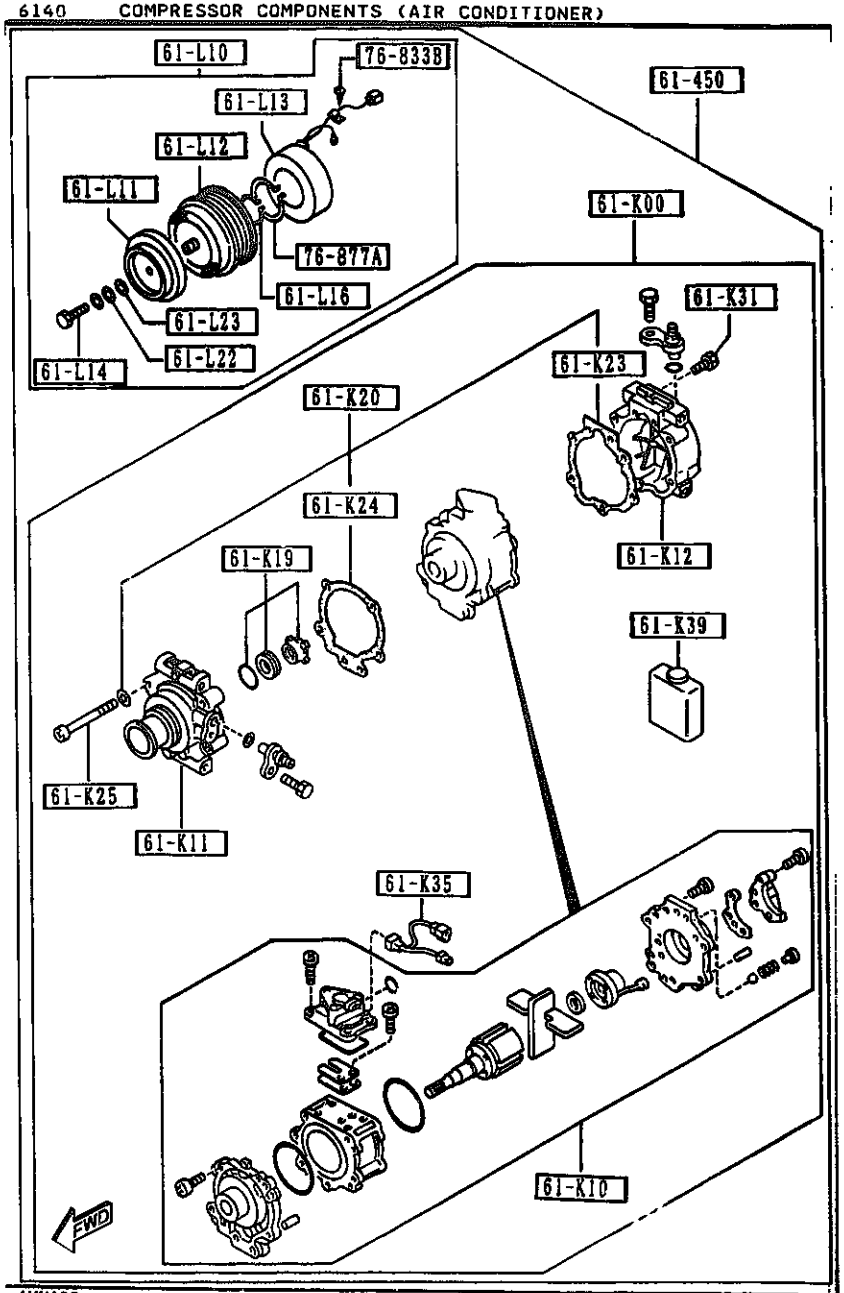

AUNA03

PART NO.	QTY	MODEL/RESTRICTION	MODEL/RESTRICTION	MODEL/RESTRICTION	FROM-TO
61-K00 NA02-61-K00	1	COMPRESSOR,AIR CON. (A)			
61-K10 NA02-61-K10	1	SHAFT,CYL -COMPRESSOR (A)			
61-K11 NA02-61-K11	1	HEAD,CYL.-COMPRESSOR (A)			
61-K12 NA02-61-K12	1	HEAD,CYL.-COMPRESSOR (A)			
61-K19 F065-61-K19	1	SEAL,SHAFT-COMPR.			
61-K20 NA02-61-K2X	1	GASKET KIT,COMPRESSOR (A)			
61-K23 NA02-61-K23	1	PLUG,COMPRESSOR (A)			
61-K24 NA02-61-K24	1	GASKET,COMPRESSOR (A)			
61-K25 F065-61-K25	5	BOLT,COMPRESSOR-AIR CON.			
61-K31 F065-61-K31	2	BOLT,COMPRESSOR			
61-K35 NA02-61-K35	1	HARNESS,COMPRESSOR (A)			
61-K39 NA02-61-K39	1	OIL,COMPRESSOR (A)			

6140 COMPRESSOR COMPONENTS (AIR CONDITIONER)

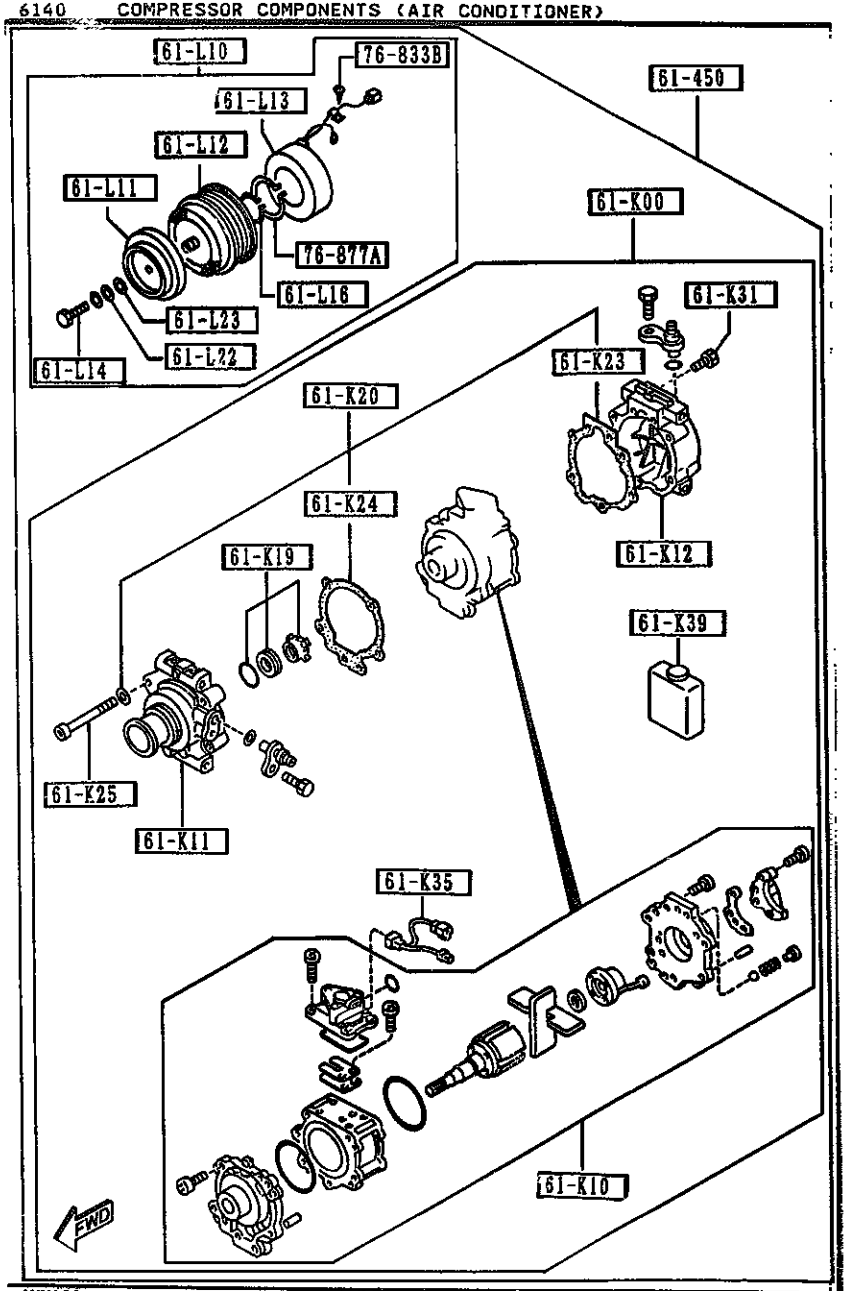

AUNA03

PART NO.	QTY	MODEL/RESTRICTION	MODEL/RESTRICTION	MODEL/RESTRICTION	FROM-TO
61-L10		CLUTCH,MAGNET			
NA02-61-L10	1	(A)			
61-L11		ARMATURE,MAGNETIC CLUTCH			
F065-61-L11	1				
61-L12		PULLEY,MAGNET CLUTCH			
NA02-61-L12	1	(A)			
61-L13		COIL,FIELD-MAGNET CLUTCH			
F065-61-L13	1				
61-L14		BOLT,MAGNET CLUTCH			
F065-61-L14	1				
61-L16		RING,SNAP-MAGNET CLUTCH			
F065-61-L16	1				
61-L22		WASHER,MAGNET CLUTCH			
KA10-61-L22	1				
61-L23		WASHER,MAGNET CLUTCH			
KA10-61-L23	1				
61-450		COMPRESSOR			
NA02-61-450A	1	(A)			
76-833B		WASHER			
B001-76-734	1				
76-877A		RING,SNAP			
B001-76-725	1				

CAT. AUNA03-04

1994-10

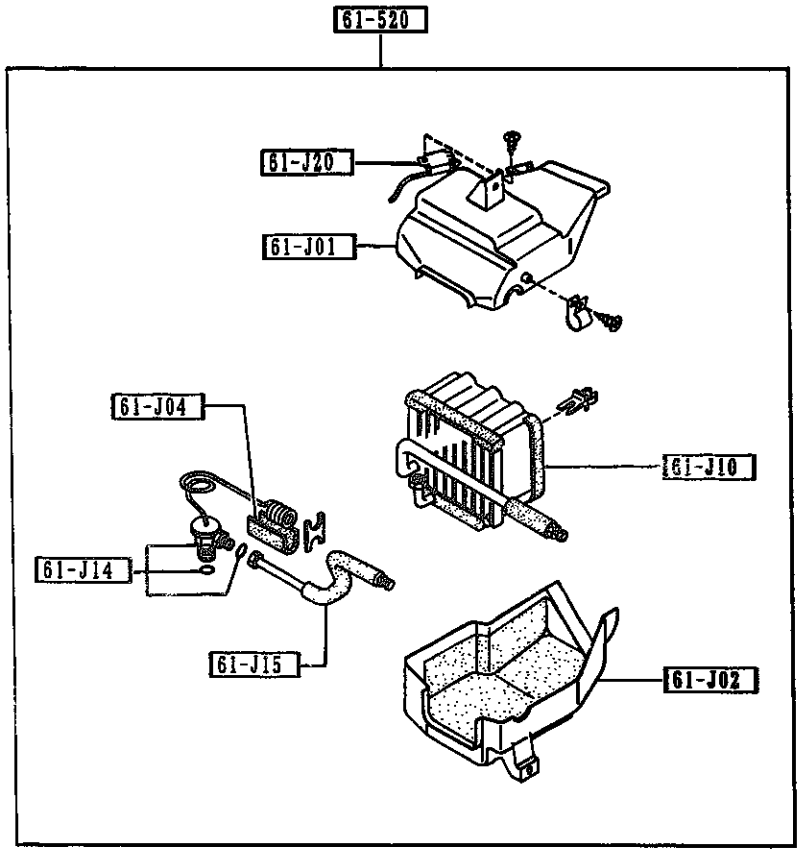

AUNA03

6150 -1 * COOLING UNIT (AIR CONDITIONER)

PART NO.	QTY	MODEL/RESTRICTION	MODEL/RESTRICTION	MODEL/RESTRICTION	FROM-TO
61-J01		CASE'A',COOLING UNIT			
NA01-61-J01	1	(A)			
61-J02		CASE'B',COOLING UNIT			
NA01-61-J02	1	(A)			
61-J04		SEAL,COOLING UNIT			
NA01-61-J04	1	(A)			
61-J10		EVAPORATOR			
NA01-61-J10		(A)			
AN(NA01-61-J10A)	1				-2901
NA01-61-J10A	1	(A)			2901-
61-J14		VALVE,EXPANSION			
NA01-61-J14	1	(A)			
61-J15		PIPE,COOLING UNIT			
NA01-61-J15	1	(A)			
61-J20		THERMOSTAT,COOLING UNIT			
NA01-61-J20	1	(A)			
61-520		UNIT,COOLING			
NA01-61-520B		(A)			
AN(NA01-61-520C)	1				-2901
NA01-61-520C	1	(A)			2901-

2901 NA351*-401942

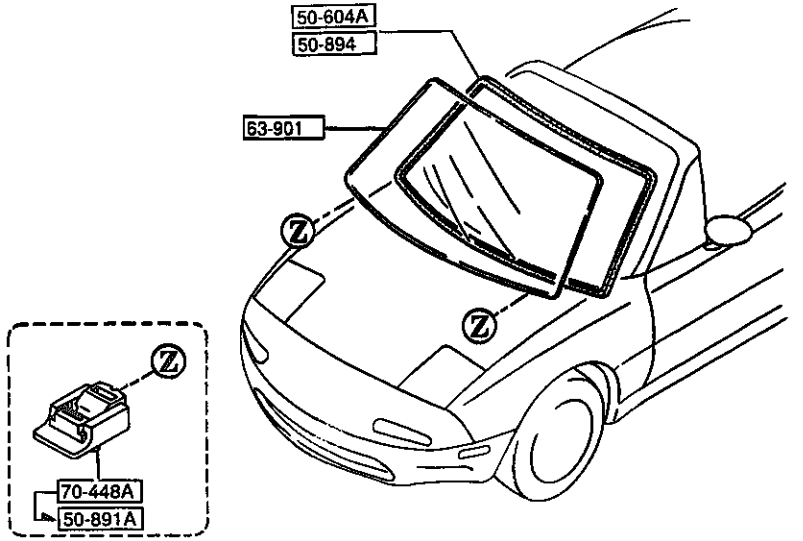

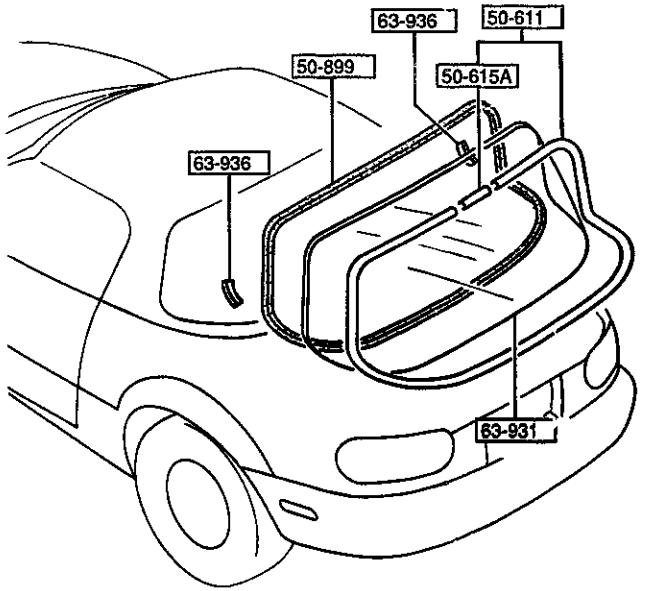

AUNA03

PART NO.	QTY	MODEL/RESTRICTION	MODEL/RESTRICTION	MODEL/RESTRICTION	FROM-TO
50-604A		DAM,WEATHERSTRIP			
GA7B-50-899	1	L=3960MM			
50-611		MOULD,RR.WINDOW			
NAY1-63-930	1	RICO-20TH-ANV., (W/DETACHABLE TOP)			
50-615A		JOINT,BACK WINDOW MOULD			
NA01-63-934	1	RICO-20TH-ANV., (W/DETACHABLE TOP)			
50-891A		SPACER,WINDOW			
EA01-50-891	2	WHITE			3621-
50-894		DAM,FRONT-WIND.			
NA01-50-894A	1				
50-899		DAM,REAR-WIND.			
NA01-63-895	1	RICO-20TH-ANV., (W/DETACHABLE TOP)			
63-901		GLASS,WINDSHIELD			
NA01-63-901	1				
63-931		GLASS,BACK WINDOW			
N007-63-931	1	RICO-20TH-ANV., (W/DETACHABLE TOP)			
63-936		PROTR,BACK WINDOW-UPPER			
NA01-63-936A	2	RICO-20TH-ANV., (W/DETACHABLE TOP)			
70-448A		SPACER'8'			
GJ21-50-891	2				-3621

3621 NA351*-423253

CAT. AUNA03-04

1994-10

(W/O DETACHABLE HARD TOP)

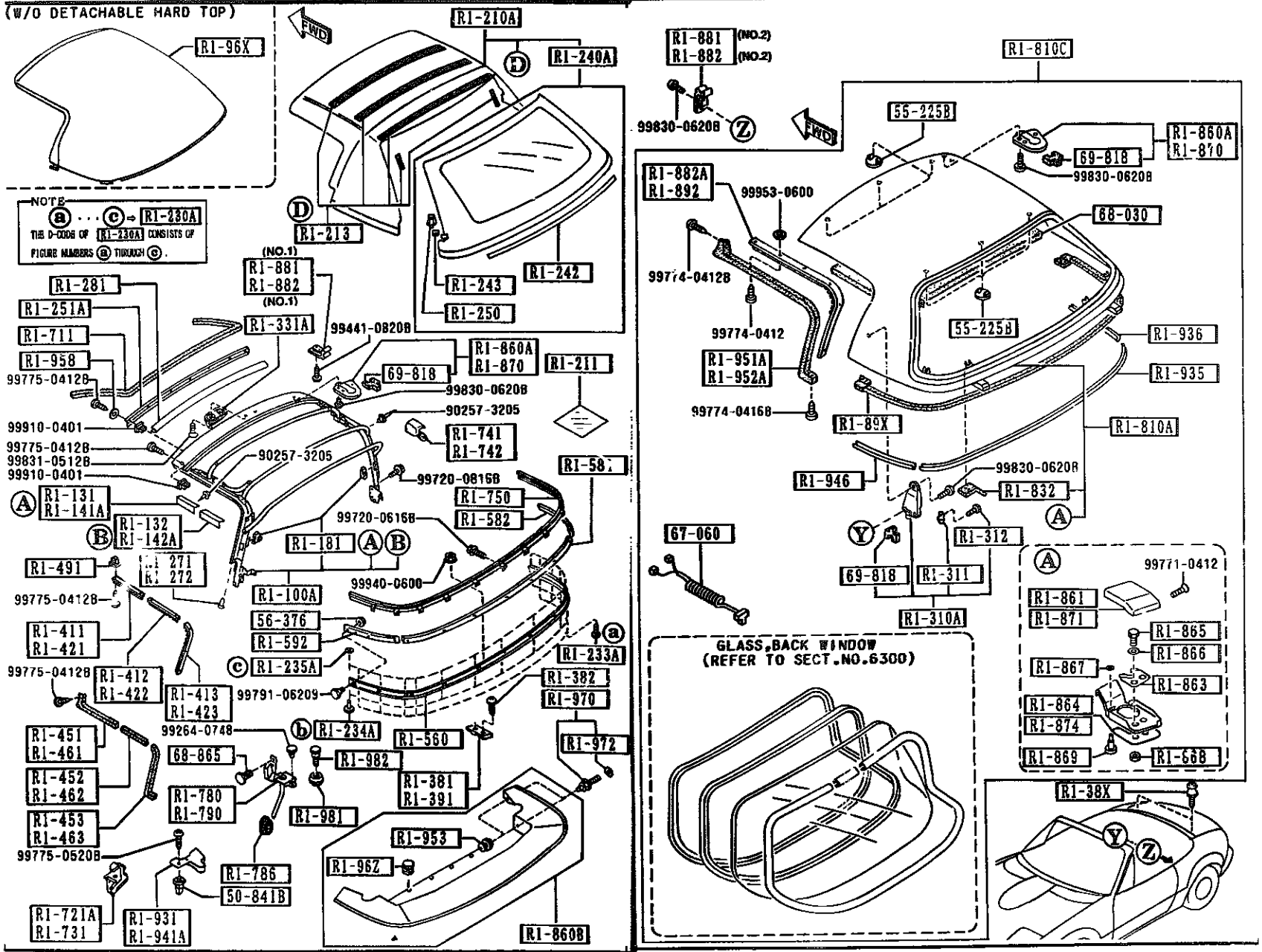

AUNA03 (CONT'D)

AUNA03

(W/O DETACHABLE HARD TOP)

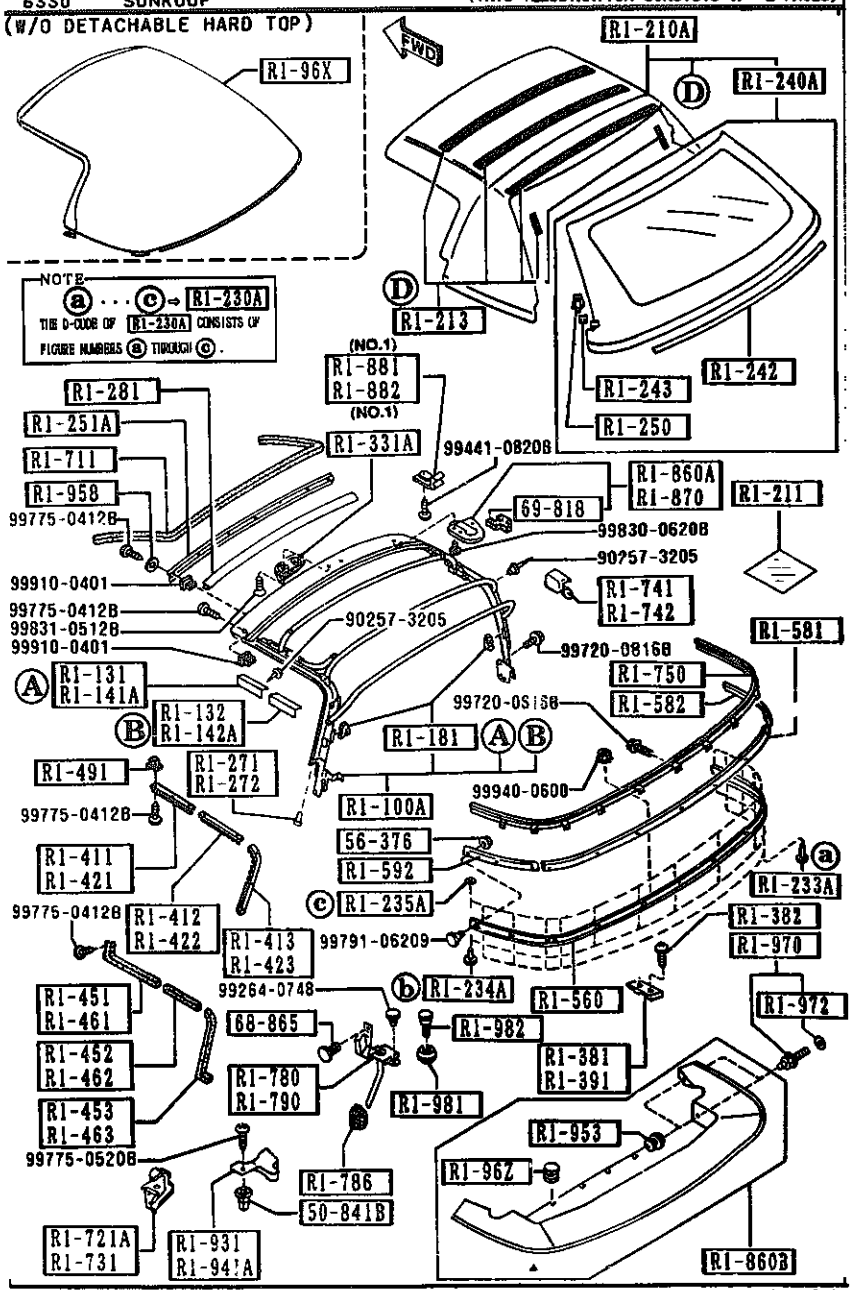

AUNA03 (CONT'D)

6330 -1 SUNROOF

PART NO.	QTY	MODEL/RESTRICTION	MODEL/RESTRICTION	MODEL/RESTRICTION	FROM-TO
R1-100A		LINK,SOFT TOP			
NA01-R1-100E	1				
R1-131		PROTECTOR'A'(R),LINK			
NA01-R1-131	1				
R1-132		PROTECTOR'B'(R),LINK			
NA01-R1-132	1				
R1-141A		PROTECTOR'A'(L),LINK			
NA01-R1-141	1				
R1-142A		PROTECTOR'B'(L),LINK			
NA01-R1-142	1				
R1-181		STOPPER,LINK-HOOD			
NA01-R1-181	2				
R1-210A		FABRIC,TOP-SOFT TOP			
NA01-R1-210H	1	BASE, (BLACK)			
NA02-R1-210B	1	OPT, RICO-20TH-ANV., SPECIAL-ED, (TAN)			
R1-211		CLOTH,REPAIR-TOP			
NAY1-R1-211	1	BASE, (BLACK)			
NAY2-R1-211	1	OPT, RICO-20TH-ANV., SPECIAL-ED, (TAN)			
R1-213		CLOTH'C',TOP			
NA02-R1-213	1	OPT, RICO-20TH-ANV., SPECIAL-ED, (TAN)			
R1-230A		FASTENER SET,TOP CLOTH			
NA01-R1-230	1				
R1-233A		FASTENER,RAIN RAIL-SIDE			
NA01-R1-233	8				

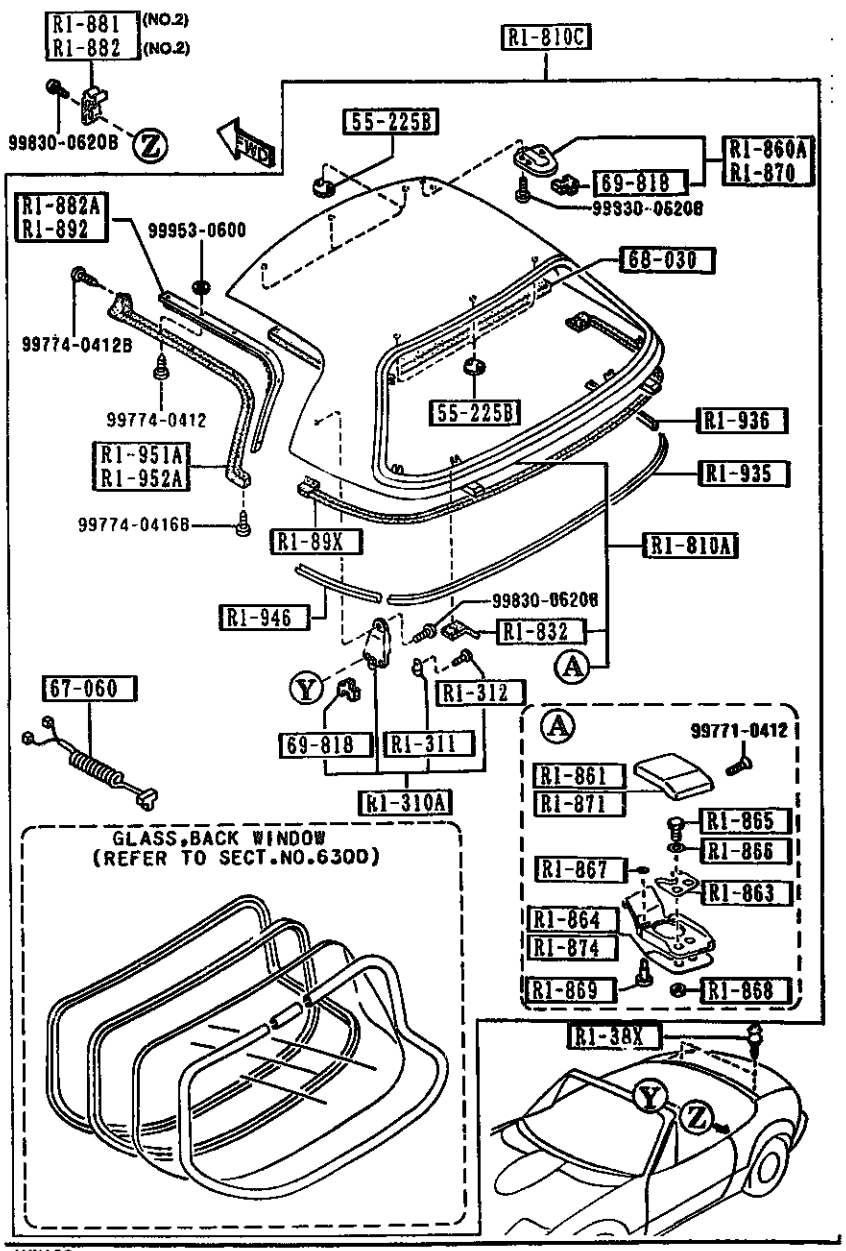

AUNA03

6330 -2 SUNROOF

PART NO.	QTY	MODEL/RESTRICTION	MODEL/RESTRICTION	MODEL/RESTRICTION	FROM-TO
R1-234A		FASTENER,RAIN RAIL-REAR			
NA01-R1-234	7				
R1-235A		WASHER,FASTENER-RAIN RAIL			
NA01-R1-235	15				
R1-240A		WINDOW,BACK-D. TOP			
NAY1-R1-240E	1	BLACK			
NAY2-R1-240B	1	TAN			
R1-242		TAPE,SEAL-RAIN RAIL			
NAY1-R1-242	2				
R1-243		STOPPER,ZIPPER-BACK WINDOW			
NAY1-R1-243	4				
R1-250		HEAD,ZIPPER-BACK WINDOW			
NA01-R1-250B	1				
R1-251A		PLATE(FRT),SET-ROOF PANEL			
NA01-R1-291	1				
R1-271		CLIP(R),FORM PLATE			
NA01-R1-271	1				
R1-272		CLIP(L),FORM PLATE			
NA01-R1-272	1				
R1-281		WELT,SEAMING-SOFT TOP			
NA01-R1-281	1				
R1-310A		LOCK,DETACHABLE TOP			
NA02-R1-310B	2	RICO-20TH-ANV., (W/DETACHABLE TOP)			
R1-311		CAP,TOP LOCK			
NA01-R1-311	2	(W/O DETACHABLE TOP)			
NA01-R1-311	6	RICO-20TH-ANV., (W/DETACHABLE TOP)			

CAT. AUNA03-04 1994-10

(W/O DETACHABLE HARD TOP) (THIS ILLUSTRATION CONSISTS OF 2 PAGES)

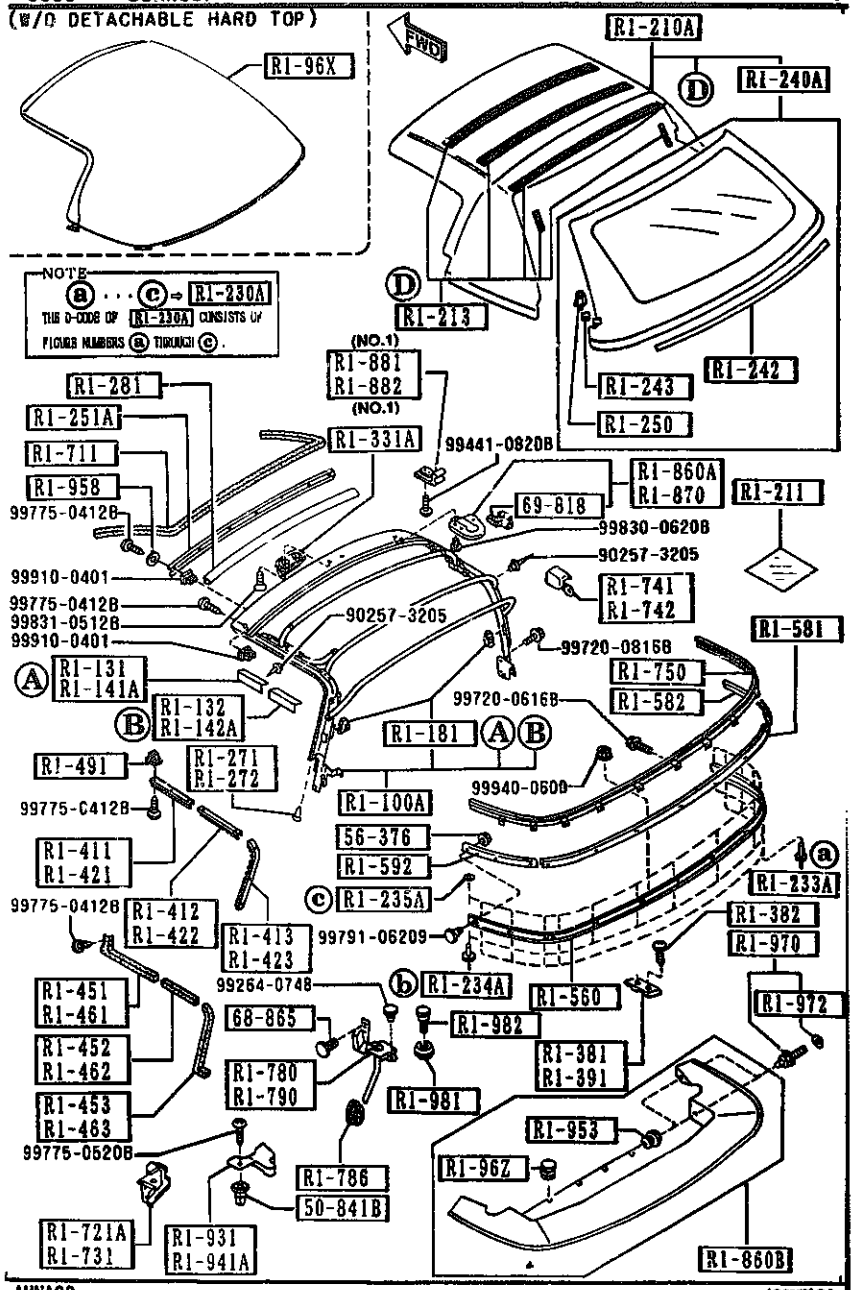

AUNA03 (CONT'D)

6330 -3 SUNROOF

PART NO.	QTY	MODEL/RESTRICTION	MODEL/RESTRICTION	MODEL/RESTRICTION	FROM-TO
R1-312		SCREW,TOP LOCK			
NA01-R1-312	2	(W/O DETACHABLE TOP)			
NA01-R1-312	6	RICO-20TH-ANV., (W/DETACHABLE TOP)			
R1-331A		HANDLE,SOFT TOP			
NA01-R1-331	1				
R1-38X		HOOK,SOFT TOP-REAR DECK			
NA01-R1-38XB	2				
R1-381		PLATE(R),HOOK-REAR DECK			
NA01-R1-381B	1				
R1-382		SCREW,HOOK-REAR DECK			
NA01-R1-382A	2				
R1-391		PLATE(L),HOOK-REAR DECK			
NA01-R1-391B	1				
R1-411		RETAINER'A'(R),WTHSTP			
NA01-R1-461	1				
R1-412		RETAINER'B'(R),WTHSTP			
NA01-R1-462	1				
R1-413		RETAINER'C'(R),WTHSTP			
NA01-R1-463	1				
R1-421		RETAINER'A'(L),WTHSTP			
NA01-R1-471	1				
R1-422		RETAINER'B'(L),WTHSTP			
NA01-R1-472	1				
R1-423		RETAINER'C'(L),WTHSTP			
NA01-R1-473	1				
R1-451		WTHSTP NO.1(R),LINK			
NA01-R1-411B	1				

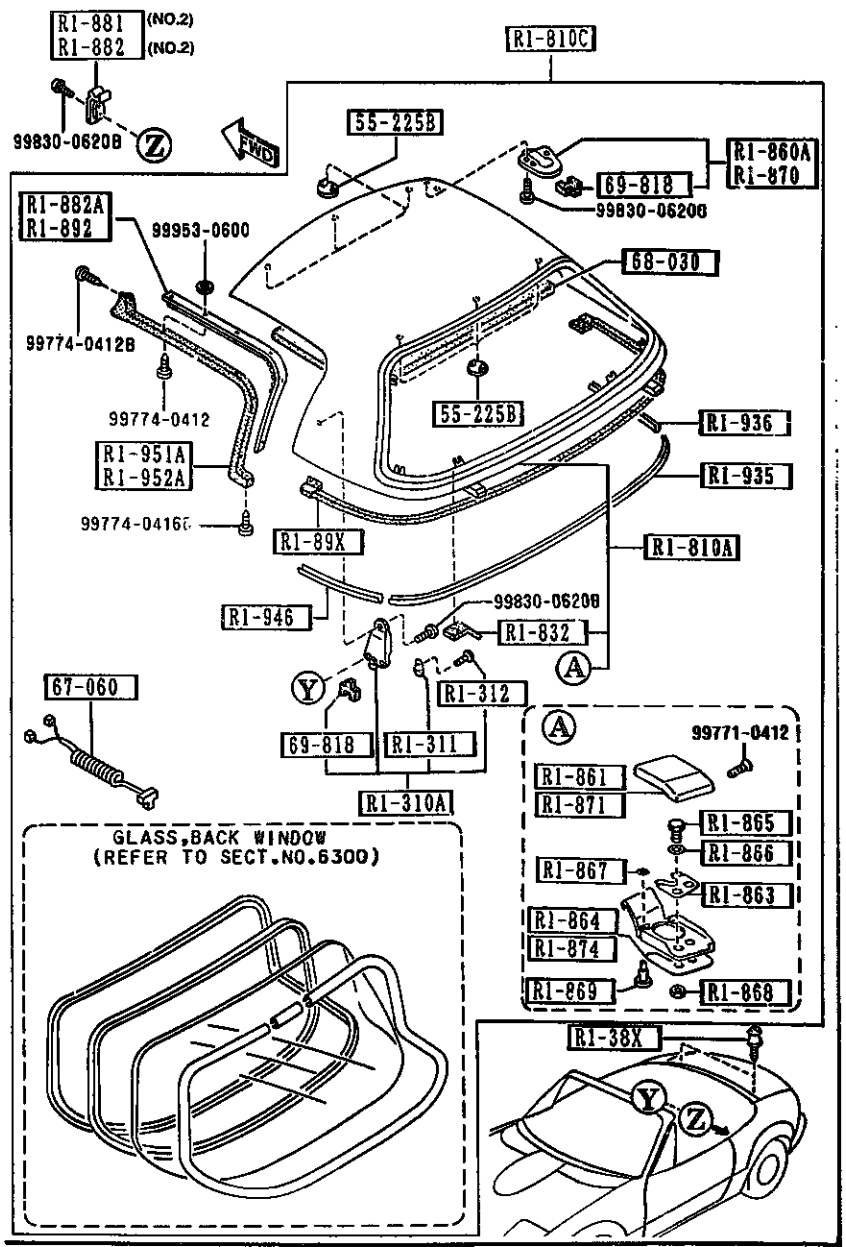

AUNA03

6330 -4 SUNROOF

PART NO.	QTY	MODEL/RESTRICTION	MODEL/RESTRICTION	MODEL/RESTRICTION	FROM-TO
R1-452 NA01-R1-412B	1	WTHSTP NO.2(R),LINK			
R1-453 NA01-R1-413B	1	WTHSTP NO.3(R),LINK			
R1-461 NA01-R1-421B	1	WTHSTP NO.1(L),LINK			
R1-462 NA01-R1-422B	1	WTHSTP NO.2(L),LINK			
R1-463 NA01-R1-423B	1	WTHSTP NO.3(L),LINK			
R1-491 NA01-R1-491	16	GROMMET,SCREW-RETAINER			
R1-560 NA01-R1-560C	1	RAIL,RAIN-SOFT TOP REAR			
R1-581 NA01-R1-581B	1	PLATE(C),SET-TOP FABRIC			
R1-582 NA01-R1-582A	1	PLATE(R),SET-TOP FABRIC			
R1-592 NA01-R1-592A	1	PLATE(L),SET-TOP FABRIC			
R1-711 NA01-R1-711B	1	WTHSTP,FRONT HEADER			
R1-721A NA01-R1-721B	1	WTHSTP(R),CAB SIDE			
R1-731 NA01-R1-731B	1	WTHSTP(L),CAB SIDE			
R1-741 NA01-R1-741B	1	PROTR(R),MOULD-BELTLINE			

CAT. AUNA03-04 1994-10

6330 SUNROOF (1/2)

(W/O DETACHABLE HARD TOP) (THIS ILLUSTRATION CONSISTS OF 2 PAGES)

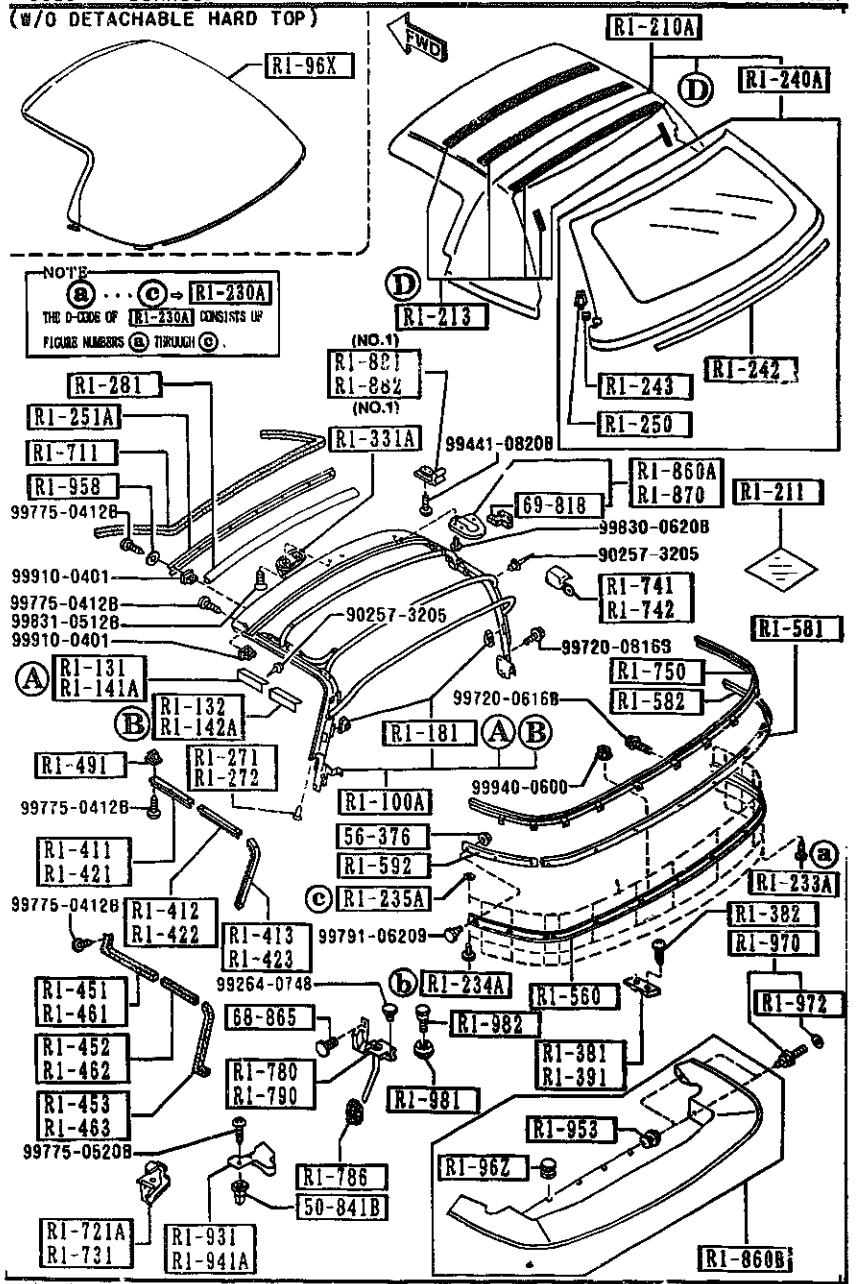

AUNA03 (CONT'D)

PART NO.	QTY	MODEL/RESTRICTION	MODEL/RESTRICTION	MODEL/RESTRICTION	FROM-TO
R1-742		PROTR(L),MOULD-BELT LINE			
NA01-R1-7428	1				
R1-750		MOULD,BELTLINE-REAR			
NA01-R1-750D	1				
R1-780		COVER(R),DRAIN-SOFT TOP			
NA01-R1-780C	1				
R1-786		GROMMET,DRAIN HOSE-TOP			
NA01-R1-786A	2				
R1-790		COVER(L),DRAIN-SOFT TOP			
NA01-R1-790C	1				
R1-810A		PANEL,ROOF			
NA06-R1-82X	1	RICO-20TH-ANV., (W/DETACHABLE TOP)			
DU	EXT-	DU MARINER BLUE			
HU	EXT-	HU NEO GREEN			
HZ	EXT-	HZ SUNBURST YELLOW			
PZ	EXT-	PZ BRILLIANT BLACK			
SU	EXT-	SU CLASSIC RED			
UC	EXT-	UC CRYSTAL WHITE			
3L	EXT-	3L SILVER STONE METALLIC			
R1-810C		ROOF,DETACHABLE TOP			
N007-R1-810A	1	RICO-20TH-ANV., (W/DETACHABLE TOP)			
DU	EXT-	DU MARINER BLUE			
HU	EXT-	HU NEO GREEN			
HZ	EXT-	HZ SUNBURST YELLOW			
PZ	EXT-	PZ BRILLIANT BLACK			
SU	EXT-	SU CLASSIC RED			
UC	EXT-	UC CRYSTAL WHITE			
3L	EXT-	3L SILVER STONE METALLIC			

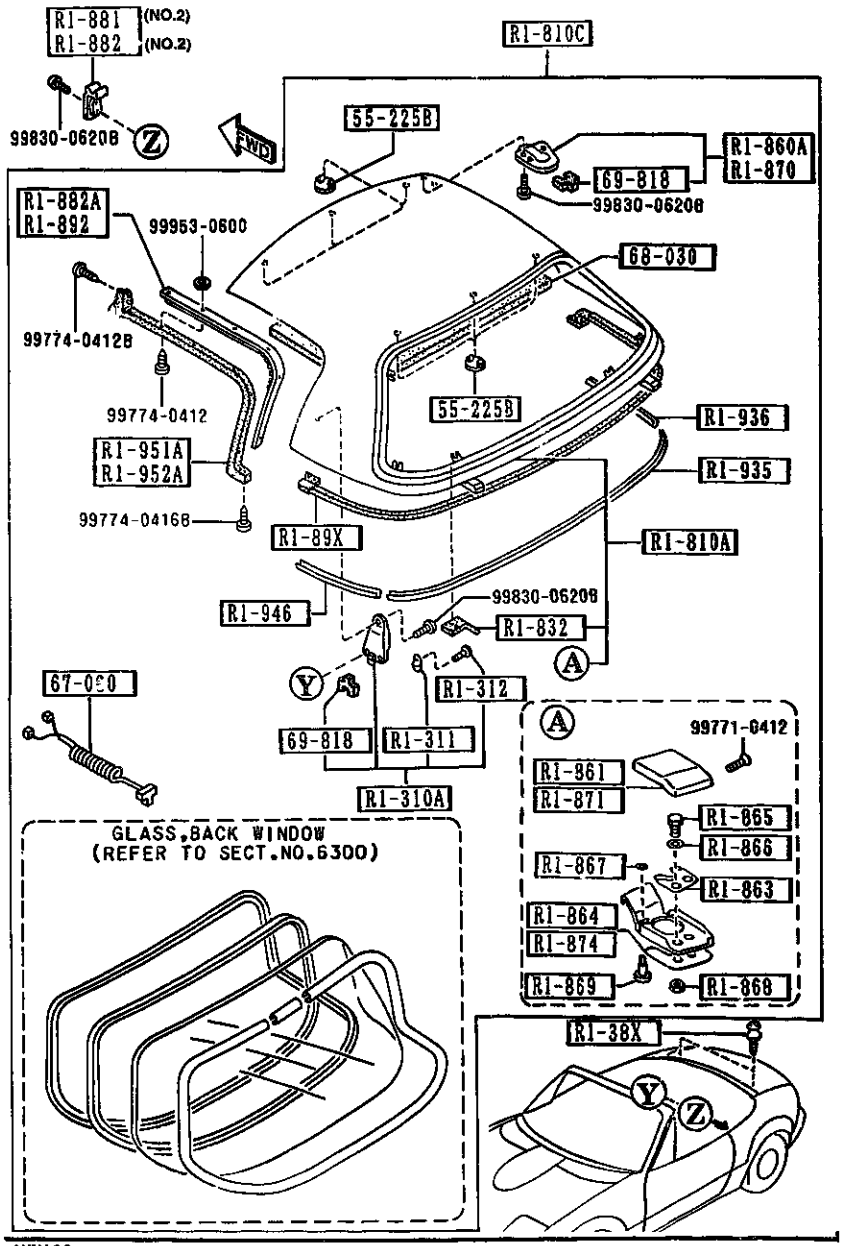

AUNA03

PART NO.	QTY	MODEL/RESTRICTION	MODEL/RESTRICTION	MODEL/RESTRICTION	FROM-TO
R1-832		PLATE,CUSHION-D. TOP			
NA01-R1-832A	2	RICO-20TH-ANV., (W/DETACHABLE TOP)			
R1-860A		LOCK(R),TOP			
NA01-R1-310B	1	(W/O DETACHABLE TOP)			
NA01-R1-310B	2	RICO-20TH-ANV., (W/DETACHABLE TOP)			
R1-860B		BOOT,TOP			
NA01-R1-960D	1				
17	INT-	NA2 RED			
66	INT-	NA0 BLACK			
88	INT-	NA1 TAN			
R1-861		COVER(R),DECK LOCK			
NA01-R1-861	1	RICO-20TH-ANV., (W/DETACHABLE TOP)			
R1-863		PLATE,DECK LOCK			
NA01-R1-863	2	RICO-20TH-ANV., (W/DETACHABLE TOP)			
R1-864		SHEET(R),DECK LOCK			
NA01-R1-864	1	RICO-20TH-ANV., (W/DETACHABLE TOP)			
R1-865		BOLT,DECK LOCK			
NA01-R1-865	4	RICO-20TH-ANV., (W/DETACHABLE TOP)			
R1-866		WASHER'A',DECK LOCK			
NA01-R1-866	4	RICO-20TH-ANV., (W/DETACHABLE TOP)			
R1-867		WASHER'B',DECK LOCK			
NA01-R1-867	2	RICO-20TH-ANV., (W/DETACHABLE TOP)			
R1-868		NUT,DECK LOCK			
NA01-R1-868	4	RICO-20TH-ANV., (W/DETACHABLE TOP)			

6330 SUNROOF (1/2)

(THIS ILLUSTRATION CONSISTS OF 2 PAGES)

(W/O DETACHABLE HARD TOP)

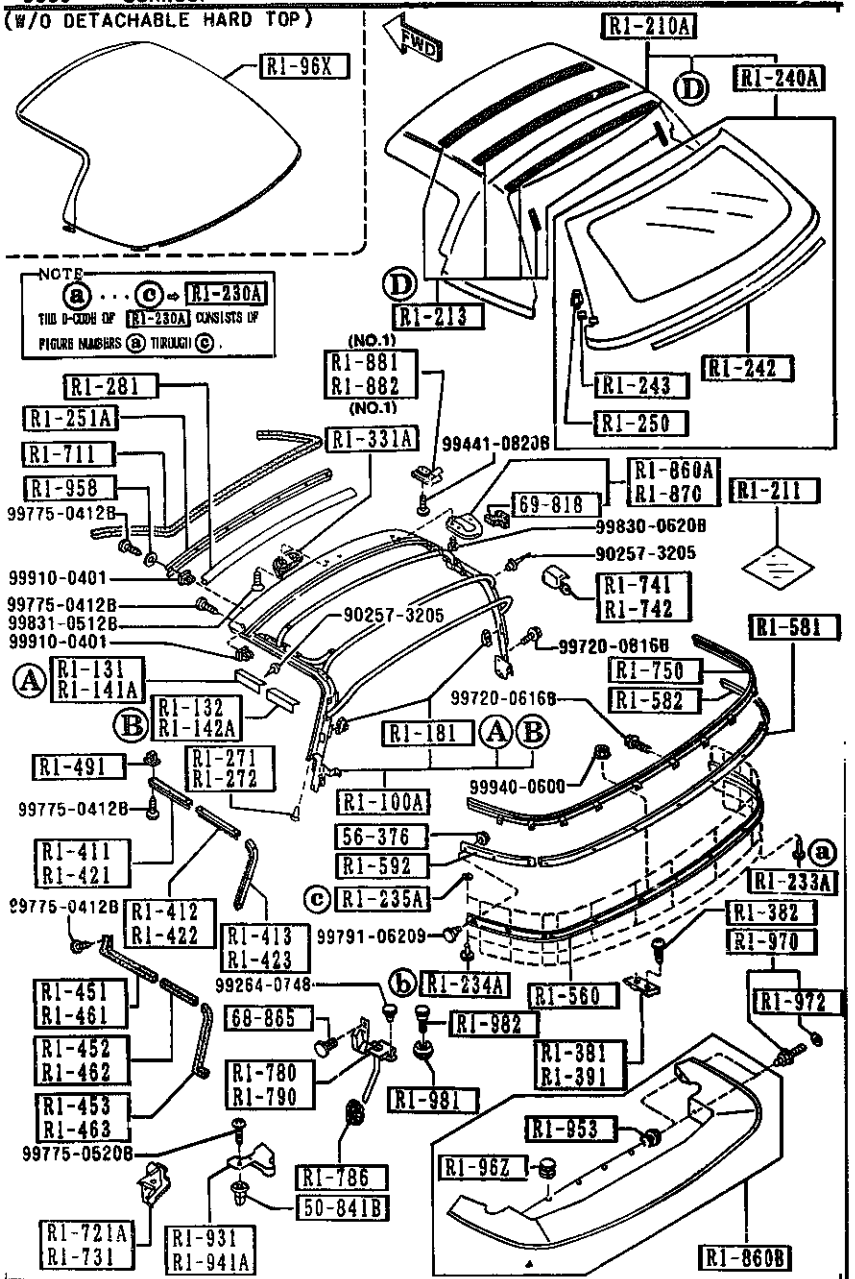

PART NO.	QTY	MODEL/RESTRICTION	MODEL/RESTRICTION	MODEL/RESTRICTION	FROM-TO
R1-869		PIN,DECK LOCK			
NA01-R1-869	2	RICO-20TH-ANV., (W/DETACHABLE TOP)			
R1-870		LOCK(L),TOP			
NA01-R1-320B	1	(W/O DETACHABLE TOP)			
NA01-R1-320B	2	RICO-20TH-ANV., (W/DETACHABLE TOP)			
R1-871		COVER(L),DECK LOCK			
NA01-R1-871	1	RICO-20TH-ANV., (W/DETACHABLE TOP)			
R1-874		SHEET(L),DECK LOCK			
NA01-R1-874	1	RICO-20TH-ANV., (W/DETACHABLE TOP)			
R1-881		STRIKER(R),LOCK-TOP			
NA01-R1-361B	1	(ILLUST. NO.1)			
NA02-R1-361B	1	RICO-20TH-ANV., (ILLUST. NO.2) (W/DETACHABLE TOP)			
R1-882		STRIKER(L),LOCK-TOP			
NA01-R1-371B	1	(ILLUST. NO.1)			
NA02-R1-371B	1	RICO-20TH-ANV., (ILLUST. NO.2) (W/DETACHABLE TOP)			
R1-882A		RETAINER(R),WTHSTP-D.TOP			
NA01-R1-882	1	RICO-20TH-ANV., (W/DETACHABLE TOP)			
R1-89X		WEATHERSTRIP,D.TOP-REAR			
NA01-R1-89XA	1	RICO-20TH-ANV., (W/DETACHABLE TOP)			
R1-892		RETAINER(L),WTHSTP-D.TOP			
NA01-R1-892	1	RICO-20TH-ANV., (W/DETACHABLE TOP)			
R1-931		COVER(R),BELT LINE			
NA01-R1-931A	1				

AUNA03 (CONT'D)

CAT. AUNA03-04 1994-10

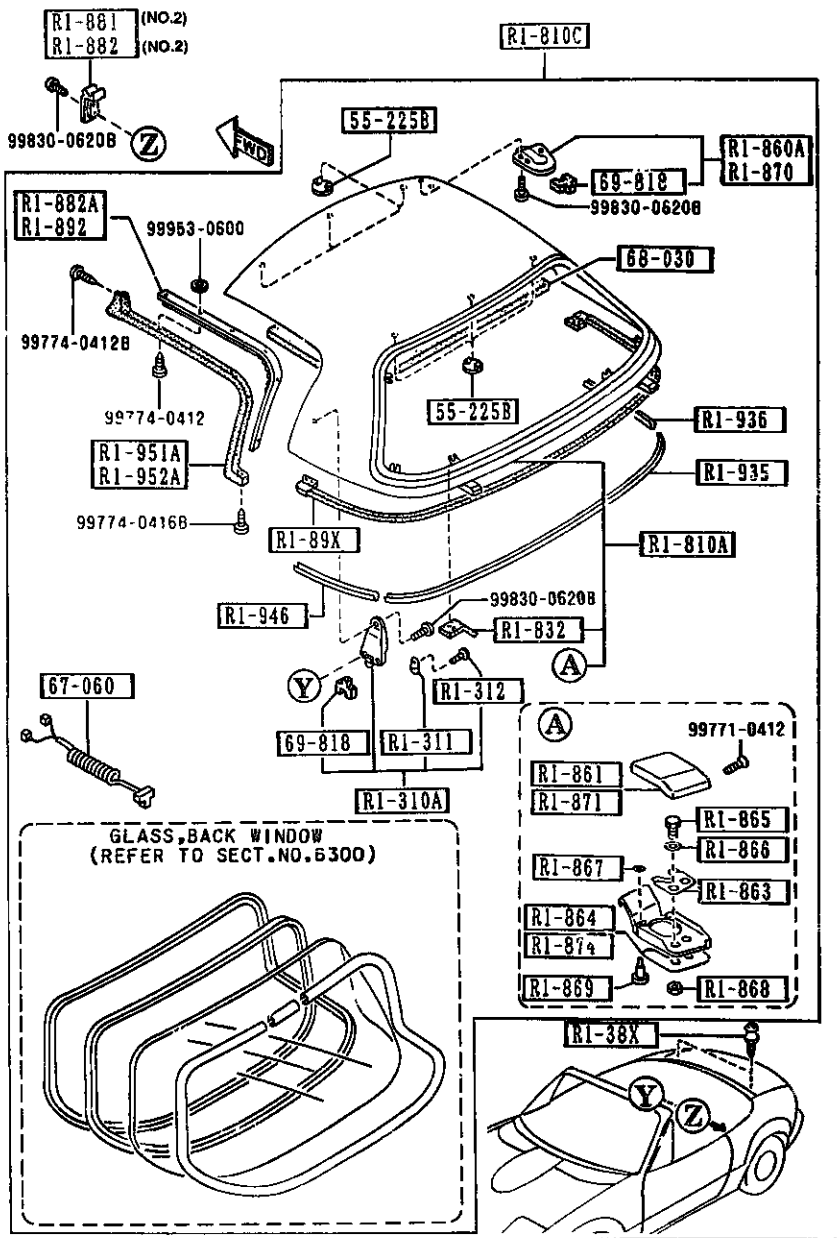

AUNA03

6330 -8 SUNROOF

PART NO.	QTY	MODEL/RESTRICTION	MODEL/RESTRICTION	MODEL/RESTRICTION	FROM-TO
R1-935		PROTECTOR(C),EDGE-D. TOP			
NA01-R1-935B	1	RICO-20TH-ANV., (W/DETACHABLE TOP)			
R1-936		PROTECTOR(R),EDGE-D. TOP			
NA01-R1-936A	1	RICO-20TH-ANV., (W/DETACHABLE TOP)			
R1-941A		COVER(L),BELT LINE			
NA01-R1-941A	1				
R1-946		PROTECTOR(L),EDGE-D. TOP			
NA01-R1-946A	1	RICO-20TH-ANV., (W/DETACHABLE TOP)			
R1-951A		WTHSTP(R),ROOF PANEL			
NA01-R1-881B	1	RICO-20TH-ANV., (W/DETACHABLE TOP)			
R1-952A		WTHSTP(L),ROOF PANEL			
NA01-R1-891B	1	RICO-20TH-ANV., (W/DETACHABLE TOP)			
R1-953		HOOK,HOOD-REAR CORNER			
B235-R1-953	4				
R1-958		WASHER,HOOK'A'&'B'			
B235-R1-958A	7				
R1-96X		COVER,TOP FABRIC			
NA01-R1-96XC	1	(W/O DETACHABLE TOP)			
R1-96Z		HOOK,TOP BOOT			
NA01-R1-96Z	7				
00	INT-	NA0 BLACK			
75	INT-	NA1 NA2 SILVER			
R1-970		HOOK,REAR DECK			
NA01-R1-970A	4				
R1-972		WASHER,HOOK'A'			
NA01-R1-926	4				

CAT. AUNA03-04 1994-10

6330 SUNROOF (1/2)

(THIS ILLUSTRATION CONSISTS OF 2 PAGES)

(W/O DETACHABLE HARD TOP)

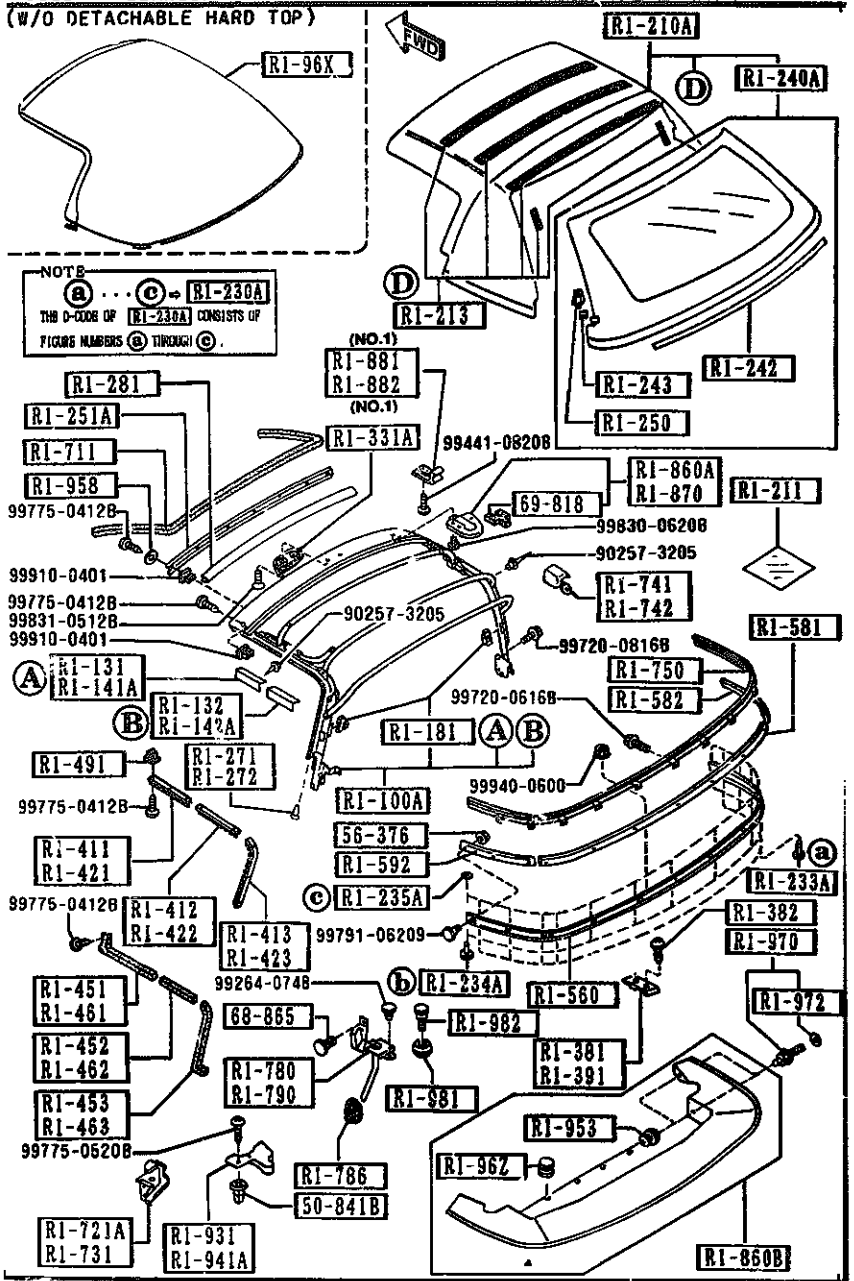

PART NO.	QTY	MODEL/RESTRICTION	MODEL/RESTRICTION	MODEL/RESTRICTION	FROM-TO
R1-981		STOPPER,SOFT TOP			
NA01-R1-981A	2				
R1-982		BOLT,STOPPER-SOFT TOP			
NA01-R1-982A	2				
50-1418		GROMMET,SCREW			
H260-50-841	2				
55-225B		COVER,HOLE			
G030-55-225	6	RICO-20TH-ANV., (W/DETACHABLE TOP)			
00	INT-	NA0 NA1 NA2 BLACK			
56-376		NUT,SELF LOCK			
B001-56-376	13				
67-060		HARNESS NO.2,REAR			
N007-67-060A	1	RICO-20TH-ANV., (W/DETACHABLE TOP)			
68-030		CEILING,TOP			
N007-68-031	1	RICO-20TH-ANV., (W/DETACHABLE TOP)			
00	INT-	NA0 NA1 NA2 BLACK			
68-865		FASTENER			
G032-68-865A	2				
00	INT-	NA0 NA1 NA2 BLACK			
69-818		PAD			
NA01-R1-313	2	(W/O DETACHABLE TOP)			
NA01-R1-313	6	RICO-20TH-ANV., (W/DETACHABLE TOP)			

6600 SWITCHES & RELAYS (ENGINE)

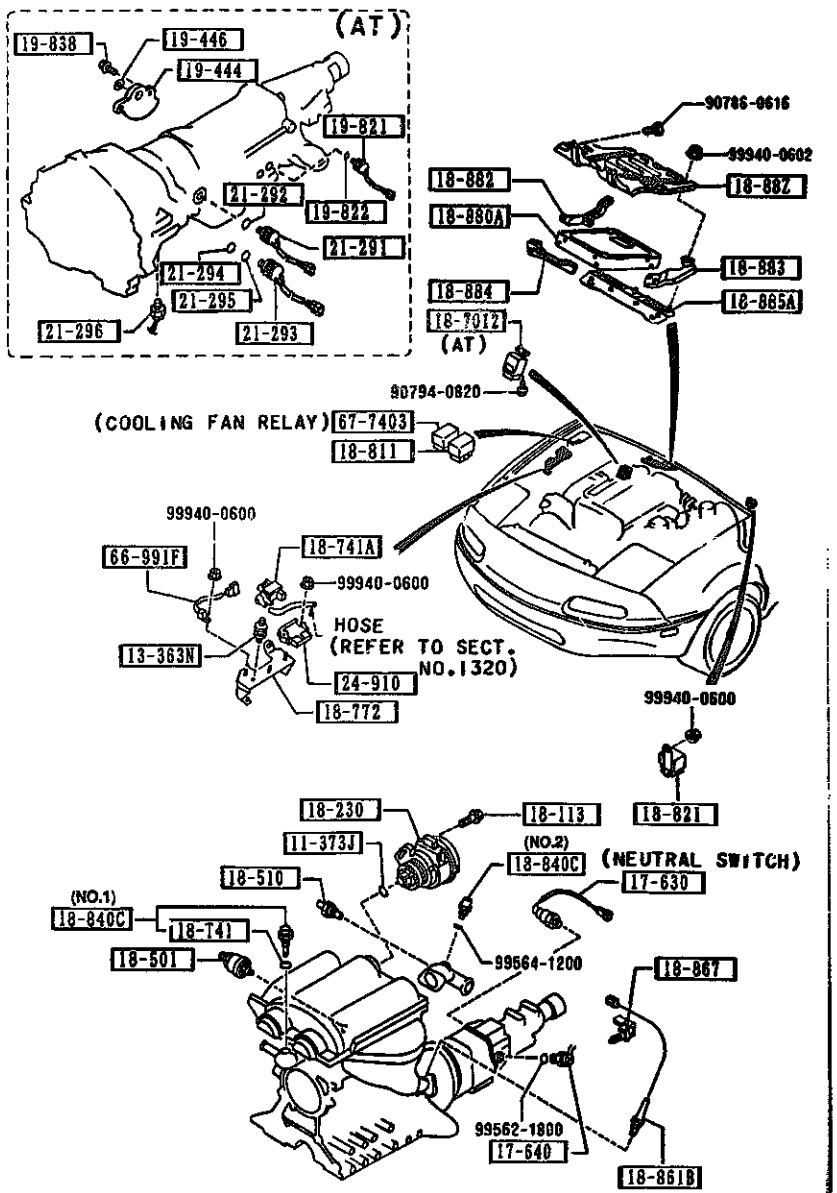

AUNA03

PART NO.	QTY	MODEL/RESTRICTION	MODEL/RESTRICTION	MODEL/RESTRICTION	FROM-TO
11-373J		RING,'O'			
99541-03801	1				
13-363N		RUBBER,MOUNTING			
0222-13-363	1				
17-630		SWITCH			
8118-17-640B	1	(MT)			
17-640		SWITCH,BACK UP LAMP			
M506-17-640A	1	(MT)			
18-T41		RING,'O'-WATER THERMO SW.			
F8B5-18-T41	1				
18-113		BOLT			
B366-18-1A5	1				
18-230		SENSOR,CRANKSHAFT POSI.			
B61P-18-230A	1				
18-501		SWITCH,OIL PRESSURE			
B61P-18-501	1				
18-510		UNIT,HEAT GAUGE			
B541-18-51X	1	PANASONIC			
*KL01-18-51X	1	NIHON THERMOSTAT			3401-
18-7012		UNIT,CONTROL			
B64J-18-780B	1	(AT)			
18-741A		VALVE,THREE WAY			
JE16-18-741	1	NIHON OIL SEAL			
18-772		BRACKET,IGNITER			
B61P-18-2F0B	1				
18-811		RELAY,MAIN			
B6S8-18-811	1				

3401 NA351*-418882

CAT. AUNA03-04

1994-10

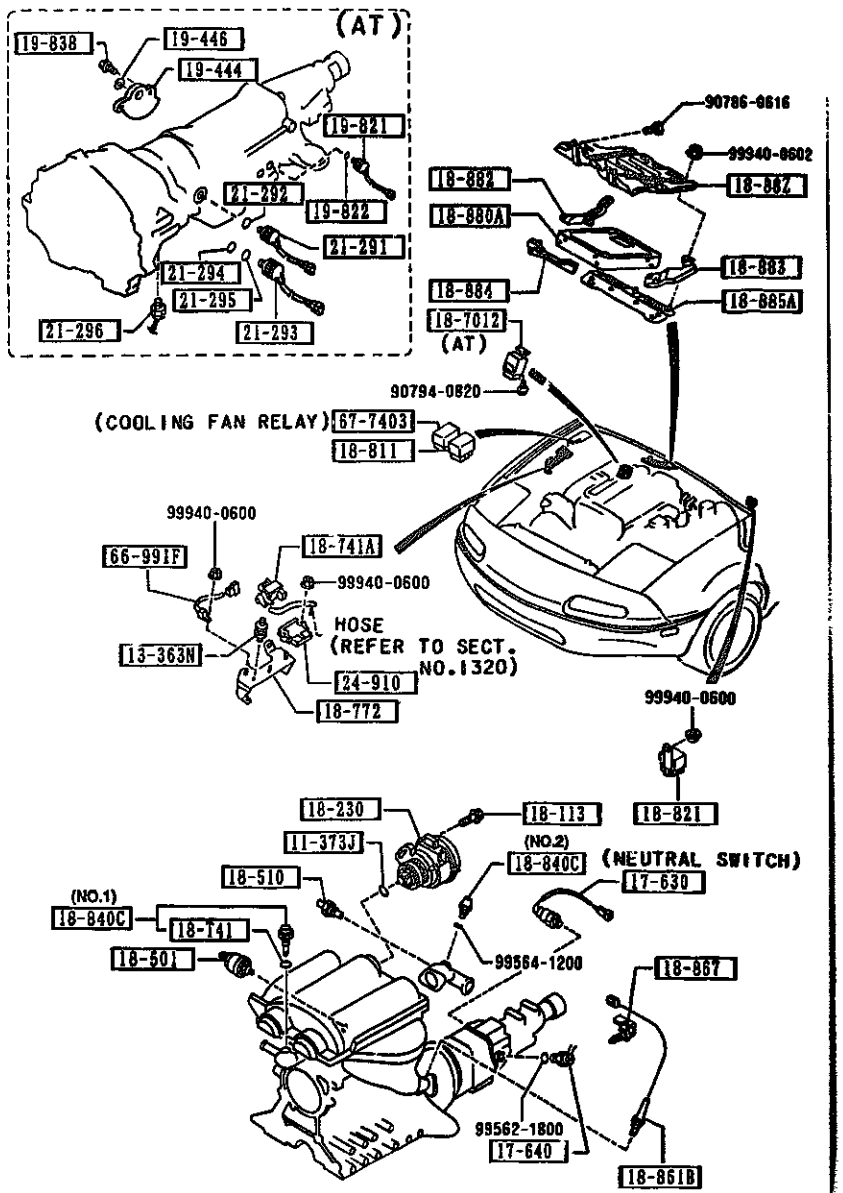

PART NO.	QTY	MODEL/RESTRICTION	MODEL/RESTRICTION	MODEL/RESTRICTION	FROM-TO
18-821		RELAY,FUEL PUMP			
N236-18-821	1				
18-840C		SENSOR,TEMP.-ENG.COOLANT			
N350-18-840	1	DENSO (ILLUST. NO.1)			
8574-18-840	1	DENSO (ILLUST. NO.2)			
18-861B		SENSOR,OXYGEN			
B61R-18-861A	1				
18-867		CLIP			
FE30-18-867A	1				
18-88Z		COVER,CONTROL UNIT			
B65K-18-88Z	1				
18-880A		MODULE,POWERTRAIN CONTROL			
B6AW-18-881	1	(CALIF)			
B61P-18-881B	1	((FED))(MT))			
B64J-18-881	1	((FED))(AT))			
18-882		BRACKET,CONTROL UNIT			
B61P-18-882	1				
18-883		BRACKET,CONTROL UNIT			
B61P-18-883	1				
18-884		BRACKET,CONTROL UNIT			
B61P-18-884	1				
18-885A		BRACKET,CONTROL UNIT			
B61P-18-885	1				
19-444		SWITCH,INHIBITOR			
BU55-19-444B	1	(AT)			
19-446		RING,'O'			
0338-19-446	1	(AT)			

6600 SWITCHES & RELAYS (ENGINE)

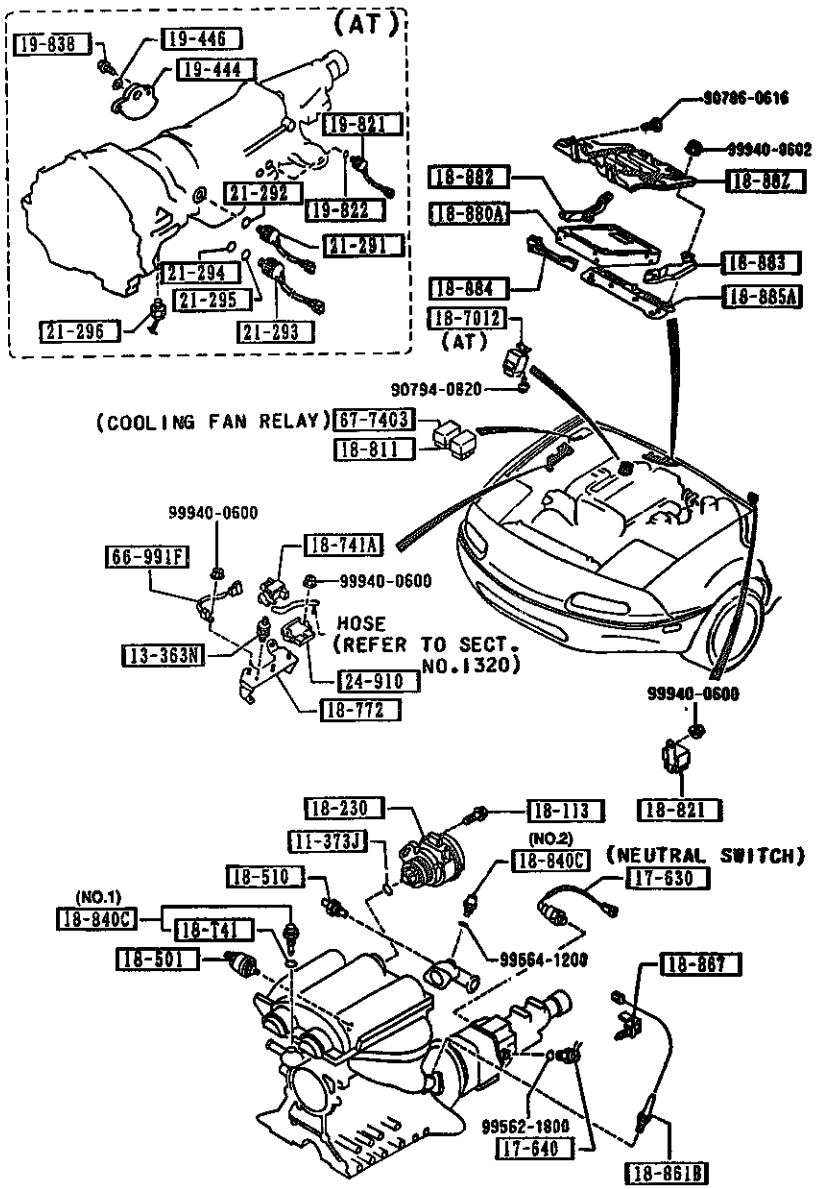

AUNA03

PART NO.	QTY	MODEL/RESTRICTION	MODEL/RESTRICTION	MODEL/RESTRICTION	FROM-TO
19-821		SOLENOID,DOWN SHIFT			
BU55-19-821	1	(AT)			
19-822		SEAL,'O'RING			
0338-19-822	1	(AT)			
19-838		BOLT-HEX,HD WASHER			
1758-19-838A	2	(AT)			
21-291		SWITCH,OIL PRESSURE			
BU55-21-2J1	1	(AT)			
21-292		RING,'O'			
BU01-21-292A	1	(AT)			
21-293		SOLENOID,OVER DRIVE			
BU55-21-2J	1	(AT)			
21-294		RING,'O'			
BU01-21-294	1	(AT)			
21-295		RING,'O'			
BU01-21-295	1	(AT)			
21-296		SOLENOID,LOCK UP CONTROL			
BU55-21-3A5	1	(AT)			
24-910		IGNITION,ELECTRIC			
B61P-18-251	1				
66-991F		CONDENSER			
B376-66-991	1				
67-7403		RELAY,N.O.			
LA10-67-740	1	10A (COOLING FAN RELAY)			

CAT. AUNA03-04

1994-10

6610 DASHBOARD SWITCHES

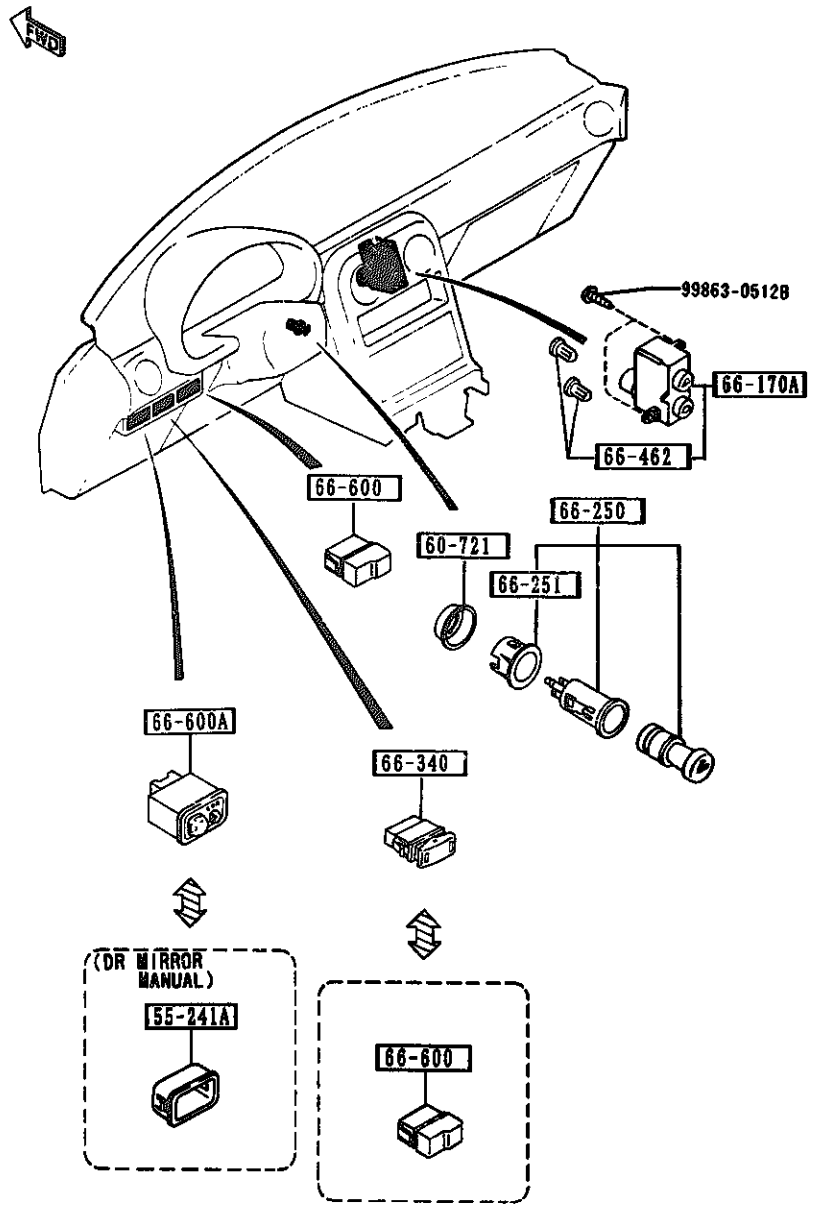

PART NO.	QTY	MODEL/RESTRICTION	MODEL/RESTRICTION	MODEL/RESTRICTION	FROM-TO
55-241A		BOX,INSTRUMENT PANEL			
NA01-55-241A	1	BASE, (DR MIRROR MANUAL)			
60-721		PROTECTOR			
B092-66-241A	1				
66-170A		SWITCH(R),CLUSTER			
NA01-66-170	1				
66-250		LIGHTER,CIGAR			
B150-66-250	1				
66-251		RING,ILLUMINATION			
B001-66-251	1				
66-340		SWITCH,MAIN			
NA01-66-340A	1	PKG-B, RICO-20TH-ANV (W/AUTO CRUISE CONT.)			
66-462		BULB'B',SWITCH-RR DEFOGER			
NA01-66-462	2				
66-600		COVER,HOLE			
B481-55-225	2	BASE, (DR MIRROR MANUAL) (W/O AUTO CRUISE CONT.)			
66-600A		SWITCH,RMT.MIRROR			
NA52-66-600A	1	PKG-A, RICO-20TH-ANV (DR MIRROR ELECT.)			



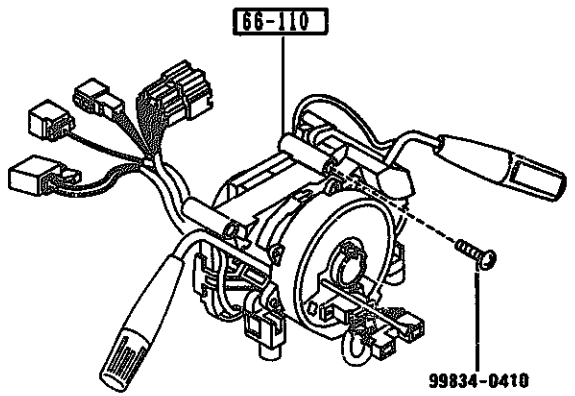

6611 -1 * COMBINATION SWITCH

PART NO.	QTY	MODEL/RESTRICTION	MODEL/RESTRICTION	MODEL/RESTRICTION	FROM-TO
66-110		SWITCH,COMBINATION			
NA01-66-120A A (NA01-66-120B)	1				-2904
NA02-66-120A A (NA02-66-120B)	1				-2904
NA01-66-120B	1	BASE, (W/O AUTO CRUISE CONT.)			2904-
NA02-66-120B	1	PKG-B, RICO-20TH-ANV., (W/AUTO CRUISE CONT.)			2904-

2904 NA351*-401954

6630 RELAYS & UNIT (BODY)

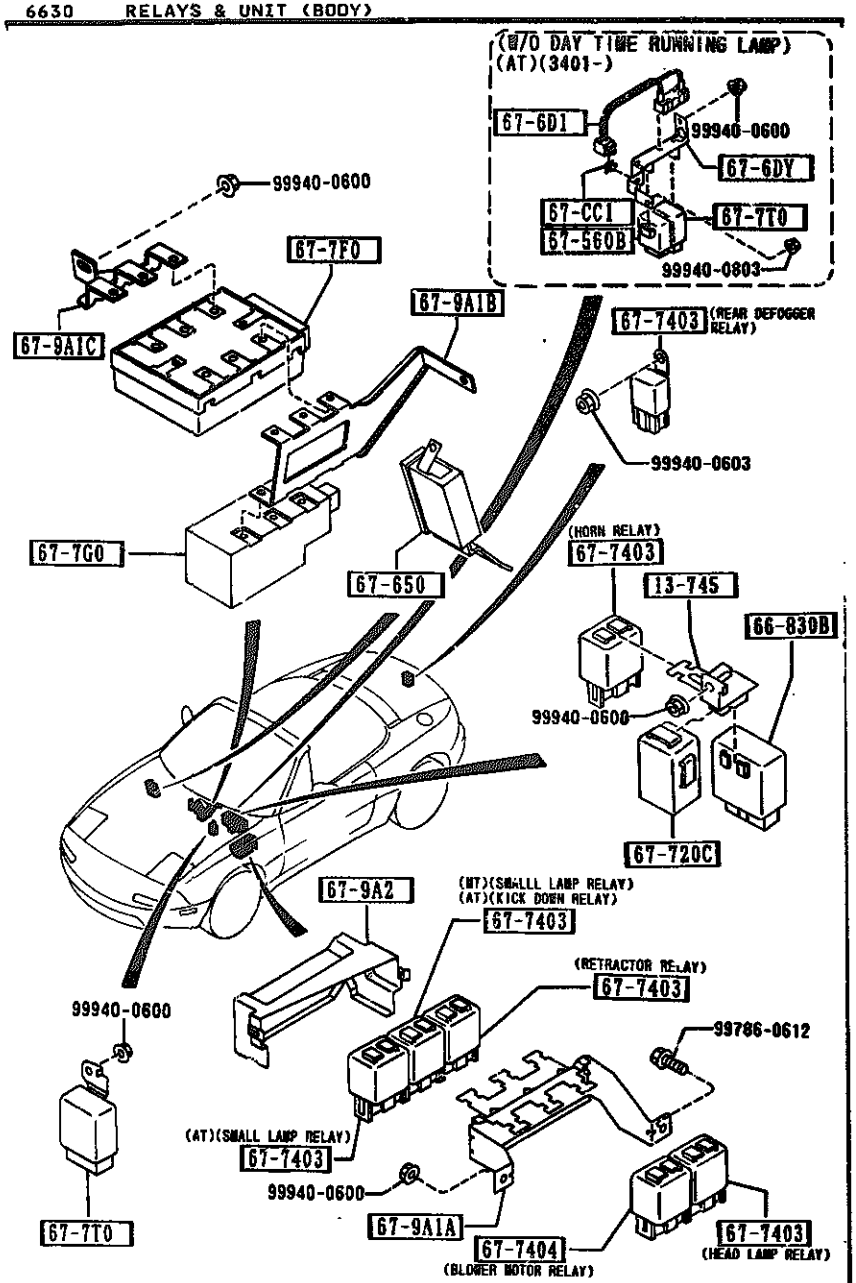

AUNA03

PART NO.	QTY	MODEL/RESTRICTION	MODEL/RESTRICTION	MODEL/RESTRICTION	FROM-TO
13-745		BRACKET,RELAY			
NA02-67-9A1	1				
66-830B		UNIT,FLASHER			
HE01-66-830	1				
67-CC1		CLIP,HARNESS			
*LA01-67-C11	1	(AT)			3401-
67-560B		UNIT,CENTRAL PROCESSING			
*NA56-67-560	1	(AT)			3401-
67-6DY		BRACKET,RELAY-INTERLOCK			
*NA56-67-6DYA	1	(AT)			3401-
67-6D1		RESISTOR,INTERLOCK			
*1020-67-6D1	1	(AT)			3401-
67-650		BOX,CONTROL-A.B.S.			
NA17-67-650A	1	(A.LOCK BRAKE)			
67-7F0		UNIT,DIAGNOSIS-AIR BAG			
NA01-67-7F0A	1				
67-7G0		UNIT,BACK UP POWER-A.BAG			
NA01-67-7G0A	1				
67-7T0		UNIT,TIMER-REAR DEFG.			
NA01-67-7T0	1	(W/O DAY TIME RUNNING LAMP) (MT)			
NA01-67-7T0	1	(W/O DAY TIME RUNNING LAMP) (AT)			-3401
*NA56-67-7T0	1	(W/O DAY TIME RUNNING LAMP) (AT)			3401-
67-720C		TIMER & BUZZER			
NA02-67-720	1				
67-7403		RELAY,N.O.			
H300-67-740		30A			

3401 NA351*-418700

CAT. AUNA03-04

1994-10

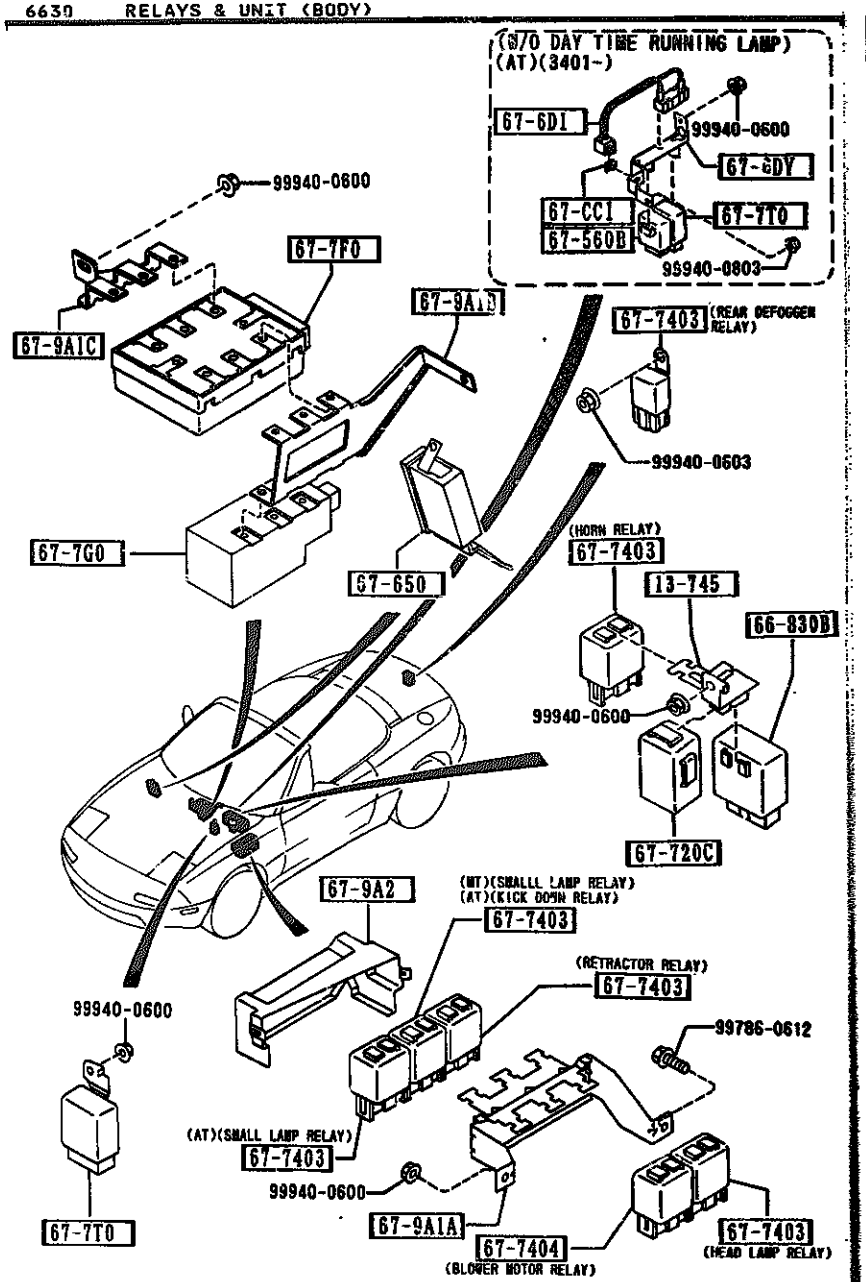

AUNA03

PART NO.	QTY	MODEL/RESTRICTION	MODEL/RESTRICTION	MODEL/RESTRICTION	FROM-10
CONT'D	1	(HEAD LAMP RELAY)			
LA10-67-740	2	10A (SMALL LAMP RELAY) (HORN RELAY) (MT)			
LA10-67-740	3	10A (SMALL LAMP RELAY) (HORN RELAY) (KICK DOWN RELAY) (AT)			
LA12-67-740	1	(RETRACTOR RELAY)			
LA40-67-740	1	(REAR DEFOGGER RELAY)			
67-7404		RELAY,TRANSFER			
HD22-67-740	1	(BLOWER MOTOR RELAY)			
67-9A1A		BRACKET,RELAY			
NA01-67-9A1	1				
67-9A1B		BRKT,DIAGNOSIS UNIT			
NA06-67-9A1B	1				
67-9A1C		BRKT,DIAGNOSIS/POWER UNIT			
NA05-67-9A1B	1				
67-9A2		COVER,RELAY			
NA02-67-9A2	1				

CAT. AUNA03-04

1994-10

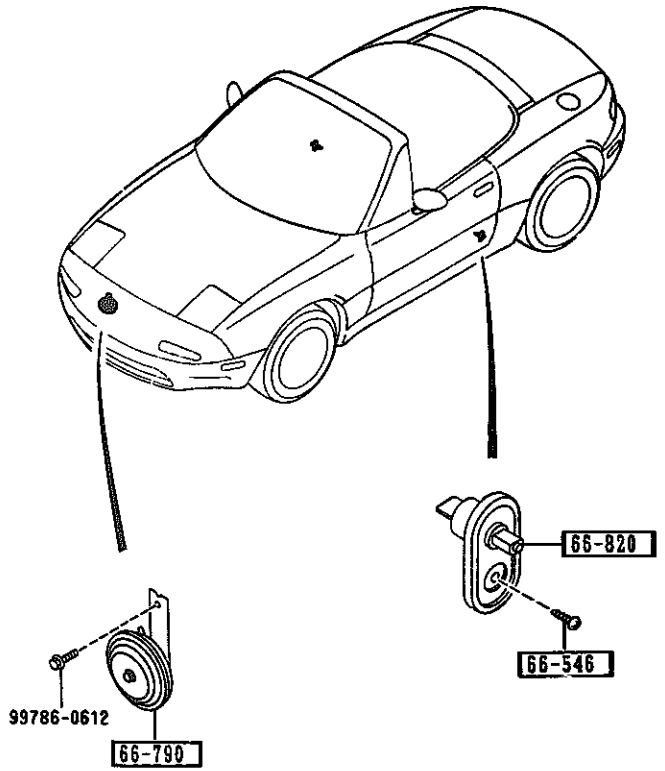

6635 -1 * DOOR SWITCH & HORNS

PART NO.	QTY	MODEL/RESTRICTION	MODEL/RESTRICTION	MODEL/RESTRICTION	FROM-TO
66-546		SCREW,DOOR SWITCH			
LA01-66-546	2				
66-790		HORN,LOW TONE			
SA59-66-790	1				
66-820		SWITCH,DOOR			
B455-66-540	2				

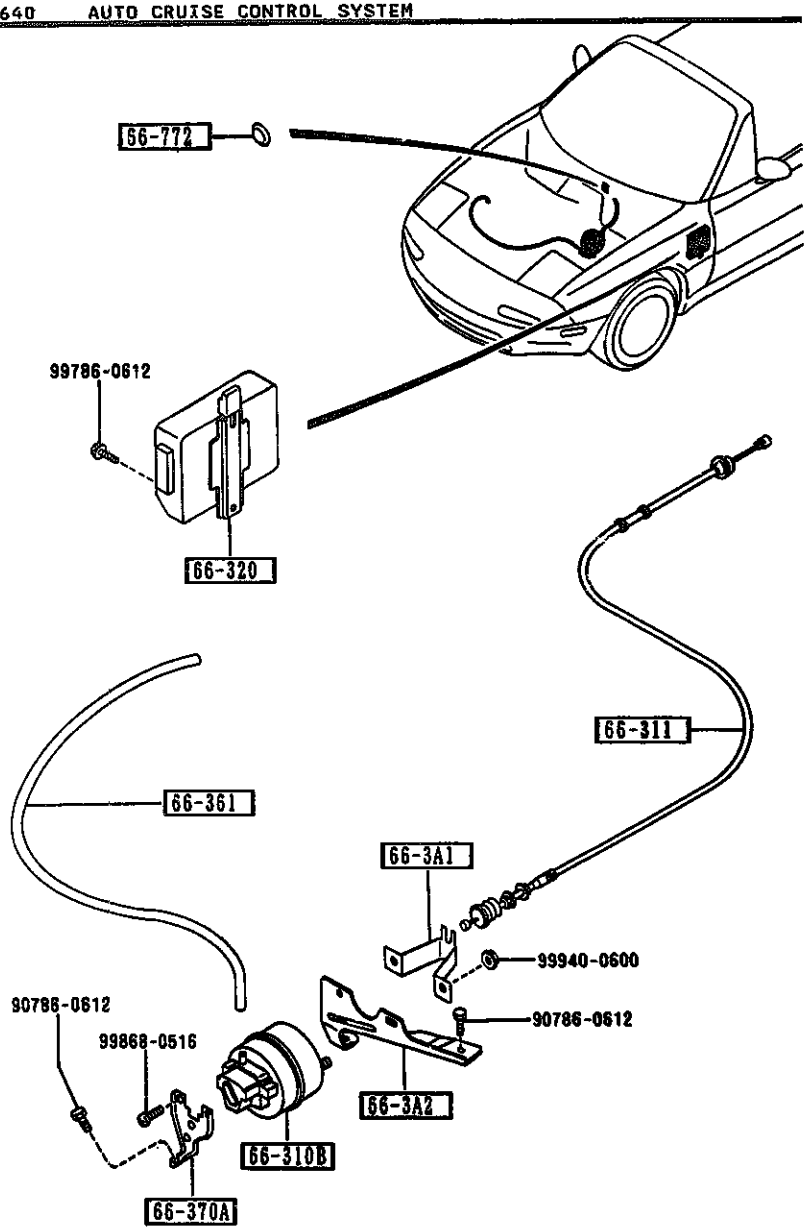

6640 -1 * AUTO CRUISE CONTROL SYSTEM

PART NO.	QTY	MODEL/RESTRICTION	MODEL/RESTRICTION	MODEL/RESTRICTION	FROM-TO
66-3A1		BRACKET,ACTUATOR-A.C.C.			
LA01-66-3A1	1				
66-3A2		BRACKET,ACTUATOR-FRONT			
NA01-66-3A2A	1				
66-310B		ACTUATOR,A.C.C.			
LA01-66-310A	1				
66-311		WIRE,A.C.C.			
NA01-66-311A	1				
66-320		BOX,A.C.C.			
NA01-66-320	1				
66-361		PIPE,AUTO CRUISE CONTROL			
NA01-66-361	1				
66-370A		BRACKET,ACTUATOR			
NA01-66-3A3A	1				
66-772		GROMMET			
B092-41-661	1	BASE, (W/O AUTO CRUISE CONT.)			

(W/O C.DISC,W/O SENSORY SOUND) (THIS ILLUSTRATION CONSISTS OF 3 PAGES)

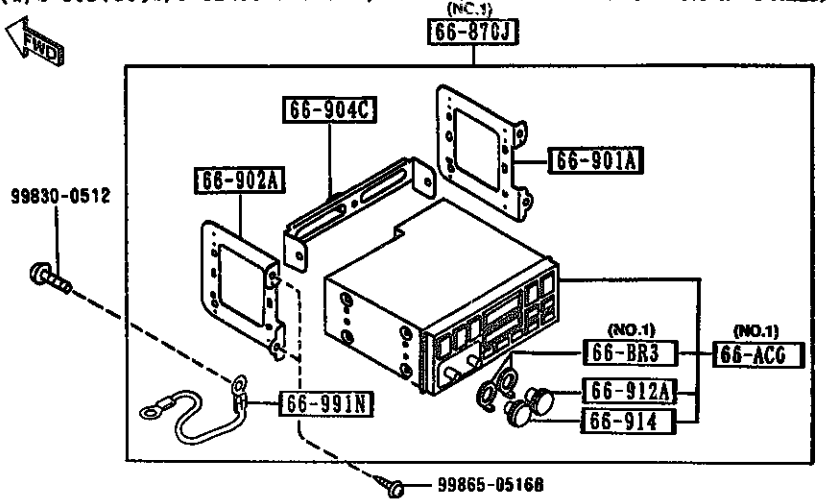

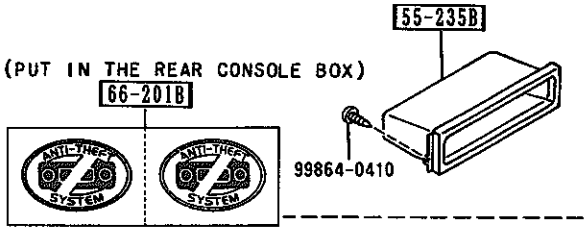

(W/C.DISC,W/O SENSORY SOUND)

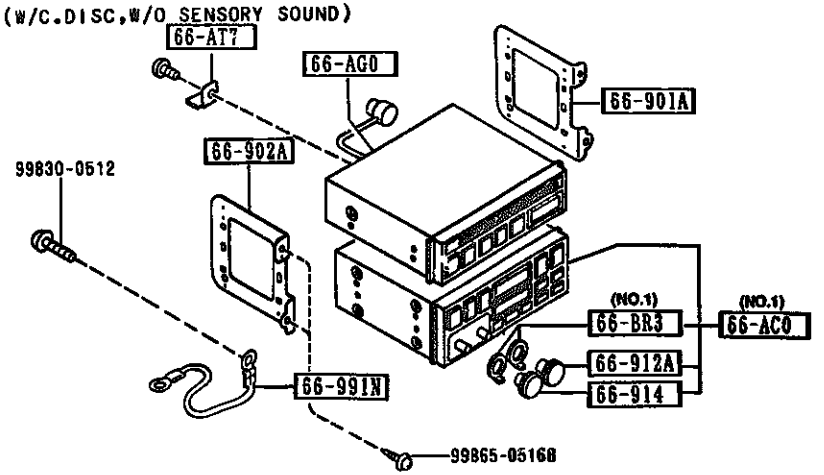

(W/O AUDIO) (THIS ILLUSTRATION CONSISTS OF 3 PAGES)

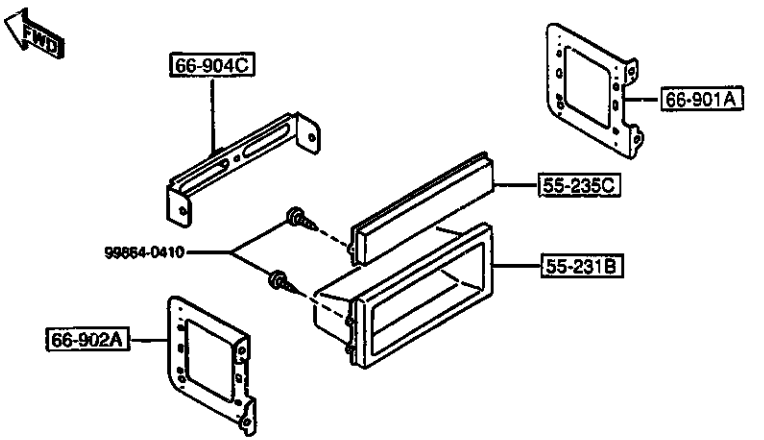

(W/C.DISC,W/SENSORY SOUND)

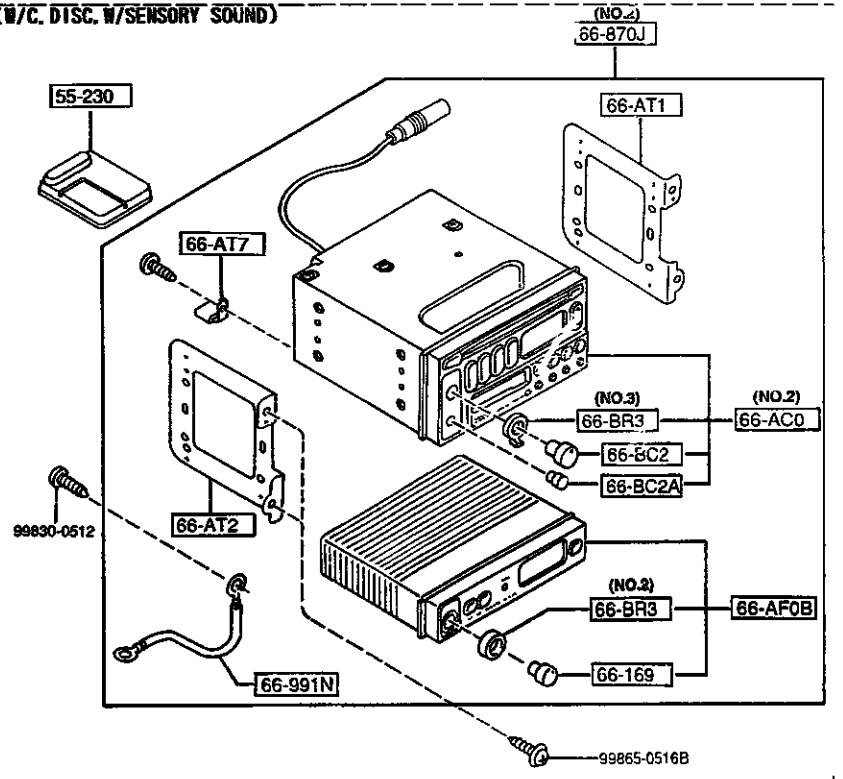

(NO.1)
66-870J

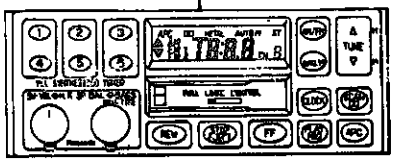

(NO.2)
66-870J

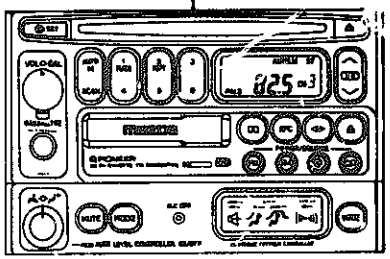

(NO.1)
66-AC0

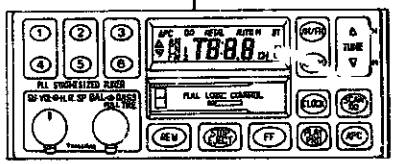

(NO.2)
66-AC0

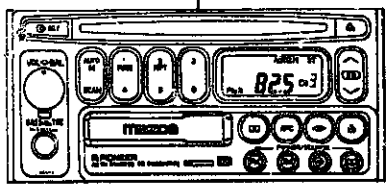

66-AG0

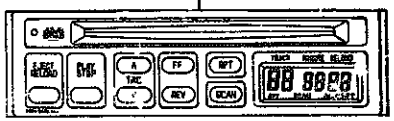

AUNA03

6680 AUDIO SYSTEMS (RADIO & TAPE DECK) (1/3)

(W/O C.DISC,W/O SENSORY SOUND) (THIS ILLUSTRATION CONSISTS OF 3 PAGES)

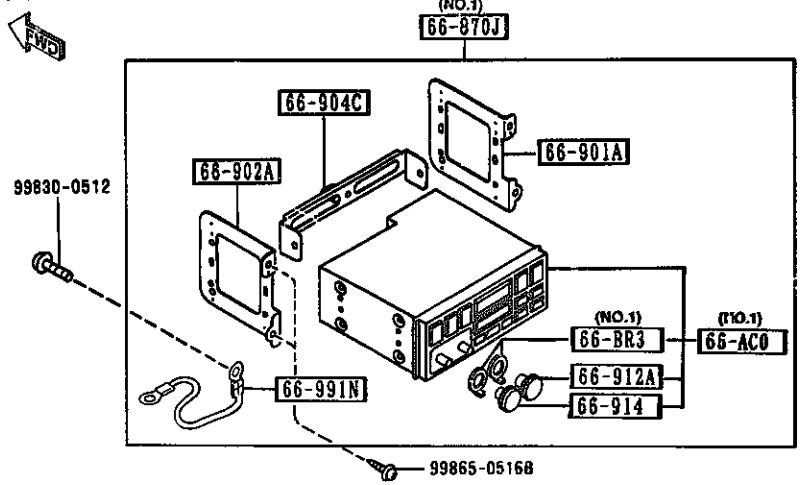

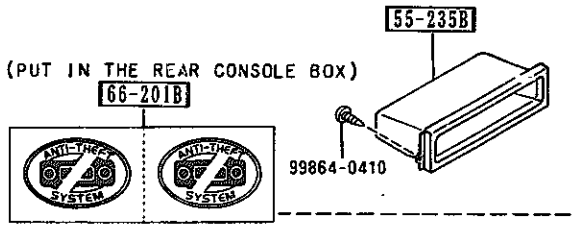

(W/C.DISC,W/O SENSORY SOUND)

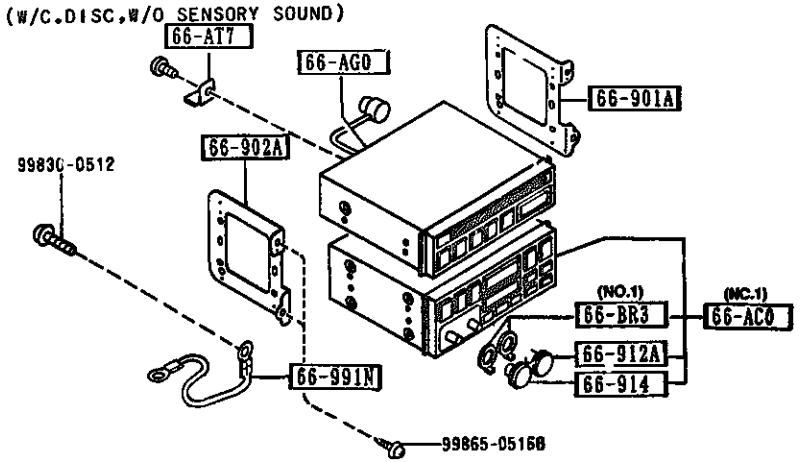

AUNA03 (CONT'D)

6680 -1 AUDIO SYSTEMS (RADIO & TAPE DECK)

PART NO.	QTY	MODEL/RESTRICTION	MODEL/RESTRICTION	MODEL/RESTRICTION	FROM-TO
55-230		PANEL,AUDIO			
NA52-66-9H1	1	(W/SENSORY SOUND)			
55-231B		ORNAMENT,STEREO			
FC02-55-235A	1	(W/O AUDIO)			
55-235B		ORNAMENT,STEREO-UPPER			
LA03-55-235A	1	(W/O C.DISC)			
55-235C		ORNAMENT,STEREO-LOWER			
LA02-55-235	1	(W/O AUDIO)			
66-AC0		TUNER & DECK,COMB.			
NA01-66-AC0A	1	(ILLUST. NO.1) (W/O SENSORY SOUND)			
NA52-66-AC0 AN(NA52-66-AC0A)	1	(ILLUST. NO.2) (W/SENSORY SOUND)			-3506
NA52-66-AC0A	1	(ILLUST. NO.2) (W/SENSORY SOUND)			3506-
66-AF0B		SOUND CONTROLLER			
NA52-66-AF0	1	(W/C.D.,W/HEAD RR SPK, W/SENSORY SOUND)			
66-AG0		PLAYER,COMPACT DISC			
NA01-66-AG0	1	(W/C.DISC,W/O SENSORY SOUND)			
66-AT1		BRACKET(R),FRONT-AUDIO			
N018-66-AS1	1	(W/SENSORY SOUND)			
66-AT2		BRACKET(L),FRONT-AUDIO			
N018-66-AS2	1	(W/SENSORY SOUND)			
66-AT7		BRACKET(RR),AUDIO			
N018-66-AS3	1	(W/C.DISC,W/SENSORY SOUND)			
N019-66-AT7	1	(W/C.DISC,W/O SENSORY SOUND)			
66-BC2		KNOB,VOLUME-TUNER & DECK			
N018-66-BC1	1	(W/C.D.,W/HEAD RR SPK, W/SENSORY SOUND)			

3506 NA351*-420224

CAT. AUNA03-04 1994-10

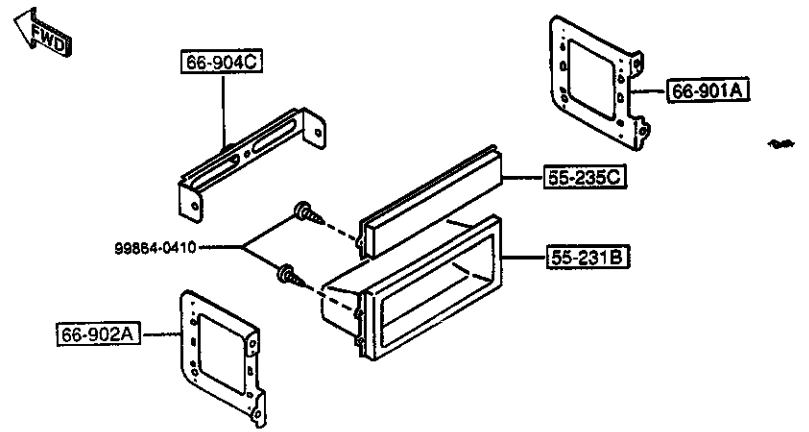

(W/C. DISC, W/SENSORY SOUND)

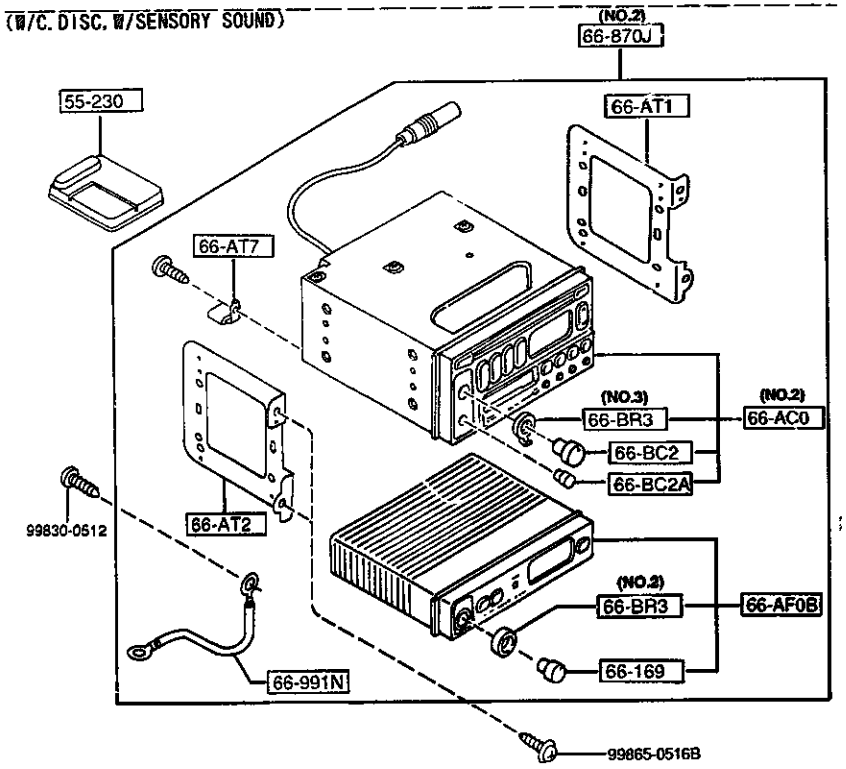

PART NO.	QTY	MODEL/RESTRICTION	MODEL/RESTRICTION	MODEL/RESTRICTION	FROM-TO
66-BC2A		KNOB,BASS/TREBLE			
NA52-66-BC2	1	(W/C.D.,W/HEAD RR SP K, W/SENSORY SOUND)			
66-BR3		KNOB,BALANCE-TUNER			
NA01-66-BR3	2	(ILLUST. NO.1) (W/O SENSORY SOUND)			
NA52-66-BR3	1	(ILLUST. NO.2) (W/C.D.,W/HEAD RR SP K, W/SENSORY SOUND)			
NO18-66-BR3	1	(ILLUST. NO.3) (W/C.D.,W/HEAD RR SP K, W/SENSORY SOUND)			
66-169		KNOB			
NA52-66-BC3	1	(W/C.D.,W/HEAD RR SP K, W/SENSORY SOUND)			
66-201B		LABEL,ANTI THEFT-AUDIO			
NA01-66-201	1	(W/O SENSORY SOUND)			
66-870J		AUDIO SET			
NA53-66-9C0	1	RICO-20TH-ANV., (ILLUST. NO.1) (W/O C.DISC,W/O SENSORY SOUND)			
NA52-66-9N0A	1	(ILLUST. NO.2) (W/C.DISC,W/SENSORY SOUND)			
66-901A		BRACKET(R),TUNER			
NA01-66-AT1	1	(W/O SENSORY SOUND)			
66-902A		BRACKET(L),TUNER			
NA01-66-AT2	1	(W/O SENSORY SOUND)			
66-904C		BRACKET,LOW			
NO19-66-AT6	1	(AM/FM.DECK,W/O C.DISC) (W/O AUDIO)			
66-912A		KNOB,TONE-TUNER			
NA01-66-BR2	1	(W/O SENSORY SOUND)			
66-914		KNOB,VOLUME-TUNER			
NA01-66-BR1	1	(W/O SENSORY SOUND)			

(THIS ILLUSTRATION CONSISTS OF 3 PAGES)

(NO.1)

66-870J

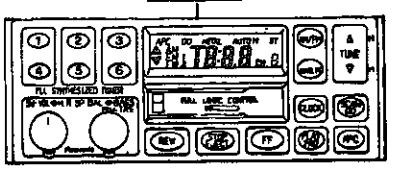

(NO.2)

66-870J

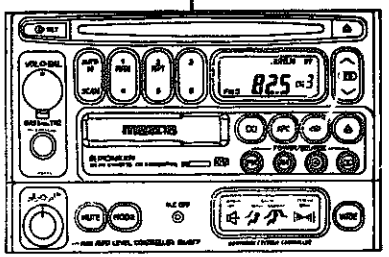

(NO.1)

66-AC0

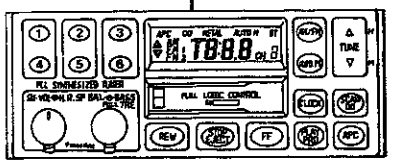

(NO.2)

66-AC0

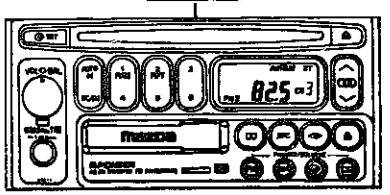

66-AC0

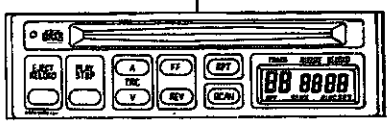

AUNA03

6680 -3 * AUDIO SYSTEMS (RADIO & TAPE DECK)

PART NO.	QTY	MODEL/RESTRICTION	MODEL/RESTRICTION	MODEL/RESTRICTION	FROM-TO
66-991N		CORD,EARTH			
NA01-66-997	1	(W/O SENSORY SOUND)			
N018-66-997	1	(W/SENSORY SOUND)			

CAT. AUNA03-04

1994-10

6682 AUDIO SYSTEMS (ANTENNA & SPEAKER)

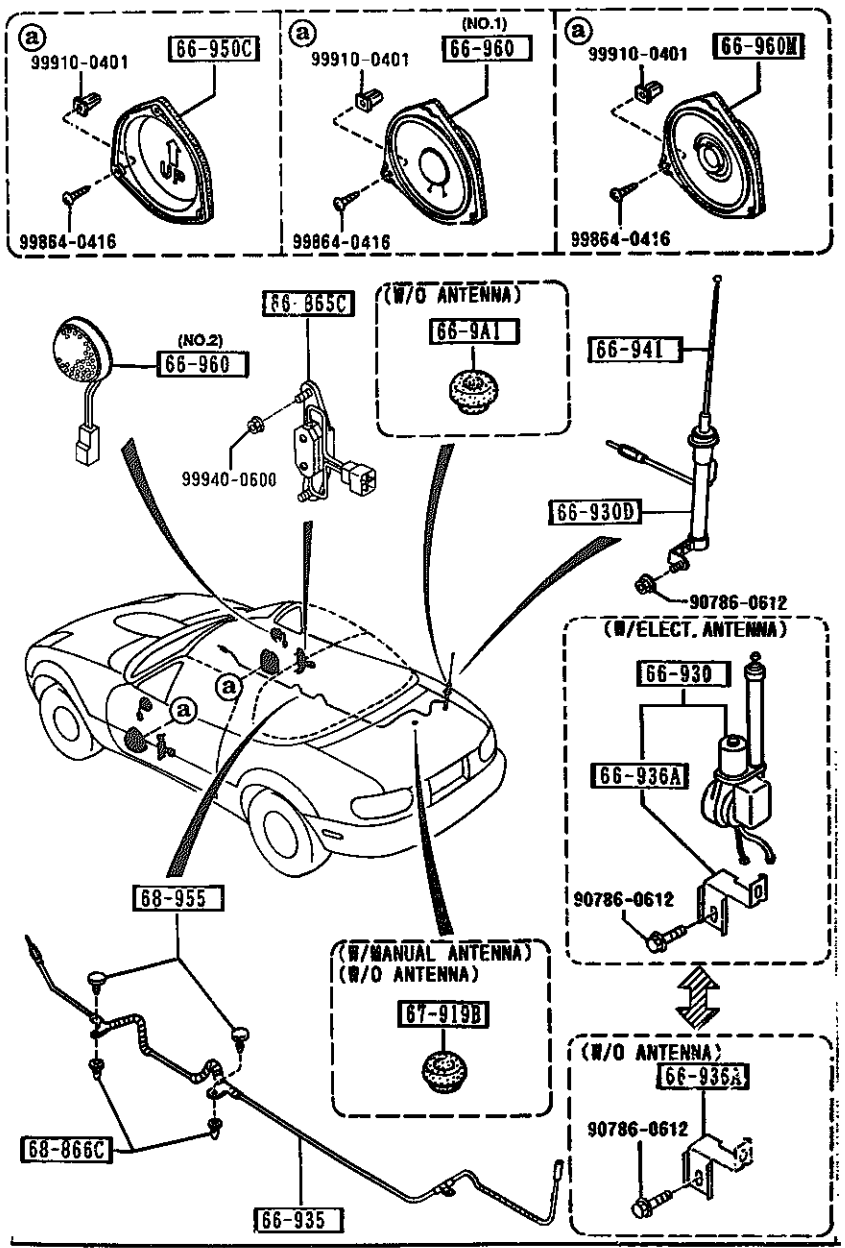

AUNA03

PART NO.	QTY	MODEL/RESTRICTION	MODEL/RESTRICTION	MODEL/RESTRICTION	FROM-TO
66-865C		SUPPRESSOR,IG.			
N018-66-991A	2	(W/C.D.,W/HEAD RR SPK, W/SENSORY SOUND)			
66-9A1		COVER,HOLE-ANTENNA			
FB01-66-9A1A	1	(W/O ANTENNA)			
66-930		ANTENNA,RADIO			
N007-66-930A	1	RICO-20TH-ANV., (W/ELECT.ANTENNA)			
66-930D		BODY,LOW-RADIO ANTENNA			
NA01-66-A3XA	1	(W/MANUAL ANTENNA)			
66-935		FEEDER-ANTENNA			
NA01-66-940C	1				
66-936A		BRKT,MOTOR-ANTENNA			
N007-66-A9X	1	RICO-20TH-ANV., (W/ELECT.ANTENNA) (W/O ANTENNA)			
66-941		POLE,ANTENNA			
N001-66-A30	1	(W/MANUAL ANTENNA)			
66-950C		BRACKET,LOUD SPEAKER			
NA01-66-980A	2	(W/O AUDIO)			
66-960		SPEAKER,LOUD-FRONT			
N018-66-960A	2	(ILLUST. NO.1) (W/C.D.,W/HEAD RR SPK, W/SENSORY SOUND)			
N019-66-960A	2	(ILLUST. NO.2) (W/C.D.,W/HEAD RR SPK, W/SENSORY SOUND)			
66-960M		SPEAKER,LOUD-DOOR			
NA03-66-96X	2	(W/O SENSORY SOUND)			
67-919B		GROMMET			
N007-67-011	1	(W/MANUAL ANTENNA) (W/O ANTENNA)			
68-866C		FASTENER,SEAL			

CAT. AUNA03-04

1994-10

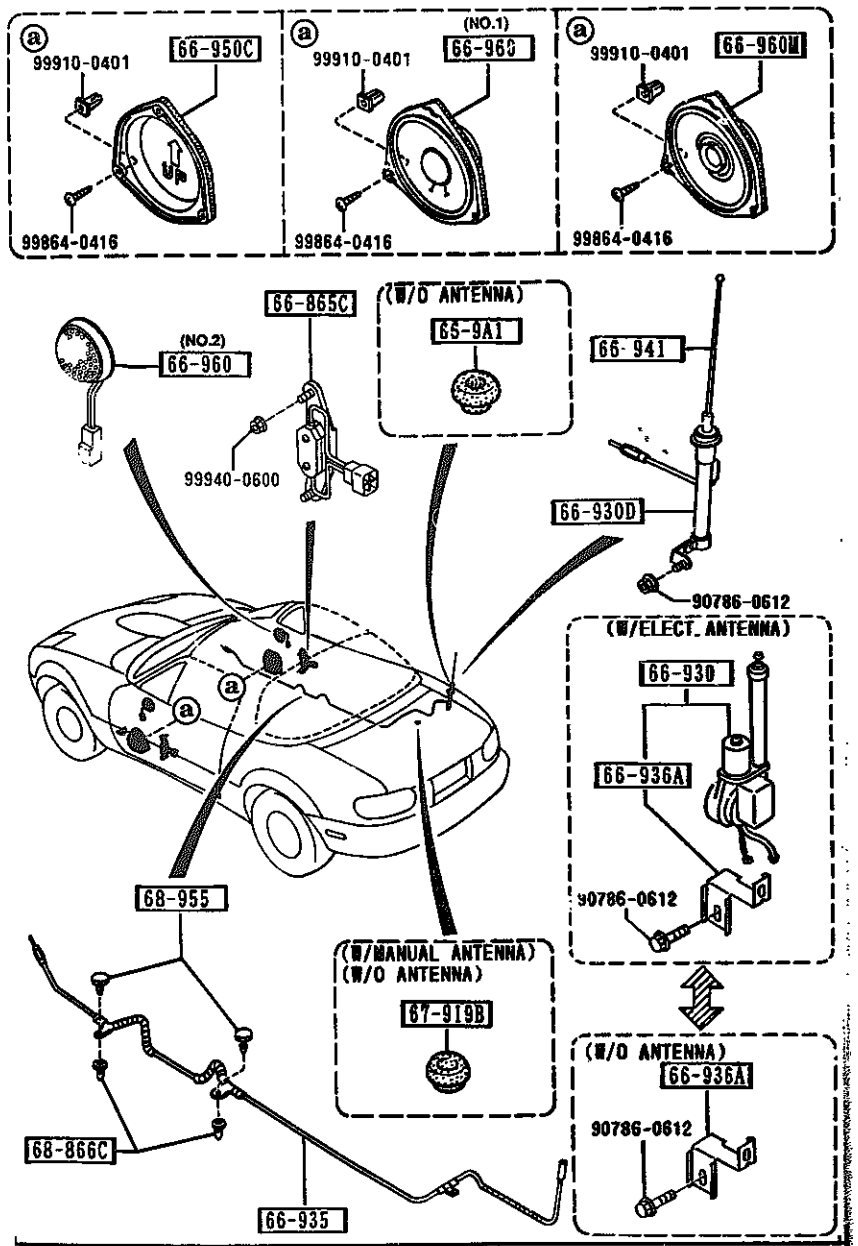

AUNA03

PART NO.	QTY	MODEL/RESTRICTION	MODEL/RESTRICTION	MODEL/RESTRICTION	FROM-TO
CONT'D B235-68-865A	2				
68-955		FASTENER,LIFT GATE TRIM			
GJ37-68-955	2				
00	INT-	NA0 NA1 NA2 BLACK			

CAT. AUNA03-04

1994-10

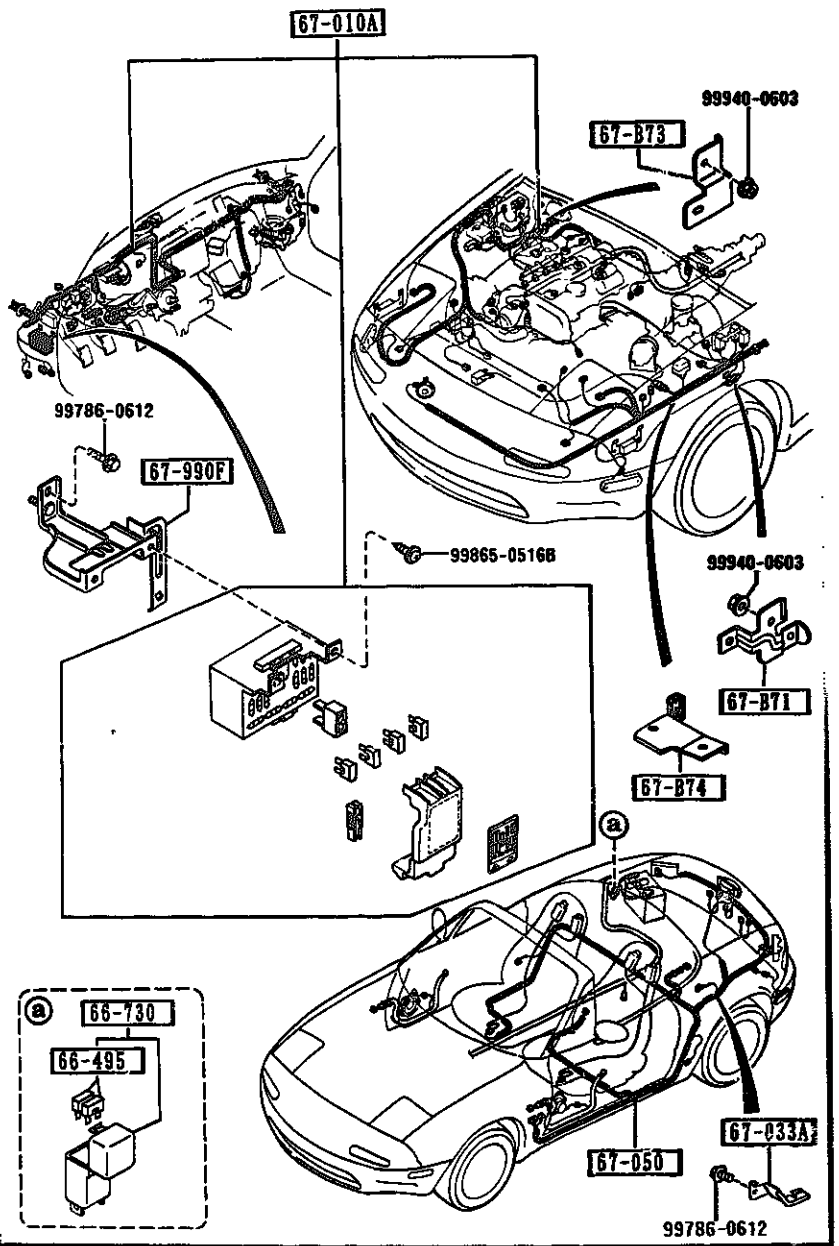

AUNA03

6700 -1 WIRING HARNESSES(FRONT & REAR)

PART NO.	QTY	MODEL/RESTRICTION	MODEL/RESTRICTION	MODEL/RESTRICTION	FROM-TO
66-495		FUSE(10A)			
99705-1110	2				
66-730		BLOCK,FUSE			
N008-66-730	1				
67-B71		BRACKET,HARNESS			
NA05-67-BW1B	1				
67-B73		BRACKET,HARNESS			
NA05-67-BW2	1				
67-B74		BRACKET,HARNESS			
N018-67-BW0	1				
67-010A		HARNESS,FRONT			
NA36-67-010B	1	((MT))(W/O A.LOCK BRAKE))(CALIF))			
NA37-67-010B	1	((MT))(A.LOCK BRAKE))(CALIF))			
NA38-67-010B	1	((MT))(W/O A.LOCK BRAKE))(FED))			
NA39-67-010B	1	((MT))(A.LOCK BRAKE))(FED))			
NA40-67-010B	1	((AT))(W/O A.LOCK BRAKE))(CALIF))			-3401
NA41-67-010B	1	((AT))(A.LOCK BRAKE))(CALIF))			-3401
NA42-67-010B	1	((AT))(W/O A.LOCK BRAKE))(FED))			-3401
NA43-67-010B	1	((AT))(A.LOCK BRAKE))(FED))			-3401
NA40-67-010C	1	((AT))(W/O A.LOCK BRAKE))(CALIF))			3401-
NA41-67-010C	1	((AT))(A.LOCK BRAKE))(CALIF))			3401-
NA42-67-010C	1	((AT))(W/O A.LOCK BRAKE))(FED))			3401-
NA43-67-010C	1	((AT))(A.LOCK BRAKE))(FED))			3401-
67-033A		BRACKET,WIRING			
N007-67-B10A	1				

3401 NA351*-418700

CAT. AUNA03-04

1994-10

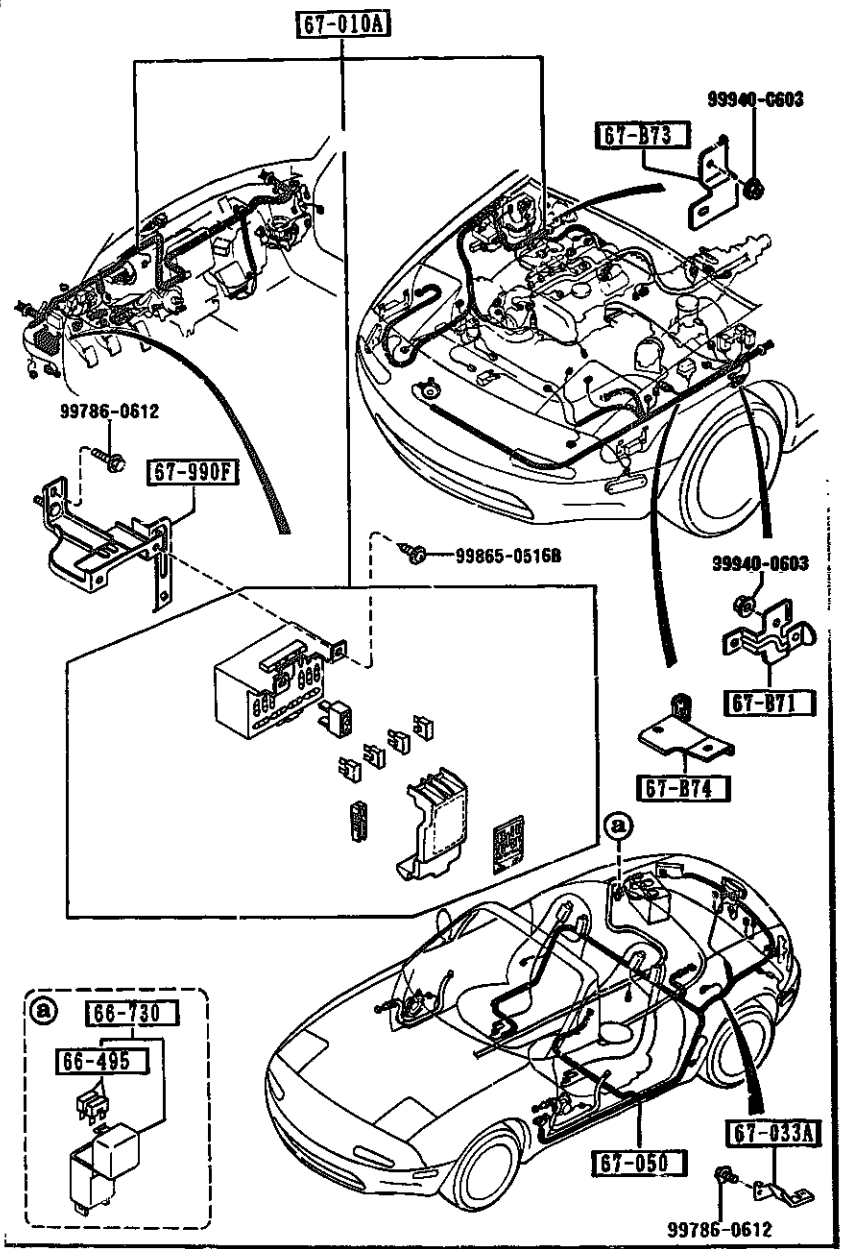

AUNA03

6700 -2 * WIRING HARNESSES(FRONT & REAR)

PART NO.	QTY	MODEL/RESTRICTION	MODEL/RESTRICTION	MODEL/RESTRICTION	FROM-TO
67-050		HARNESS,REAR			
NA36-67-050A AN(NA36-67-050B)	1				-2826
NA37-67-050A AN(NA37-67-050B)	1				-2826
NA36-67-050B	1	(W/O A.LOCK BRAKE)			2826-
NA37-67-050B	1	(A.LOCK BRAKE)			2826-
67-990F		BRACKET,HARNESS			
NA01-67-BJ0	1				

2826 NA351*-401430

CAT. AUNA03-04

1994-10

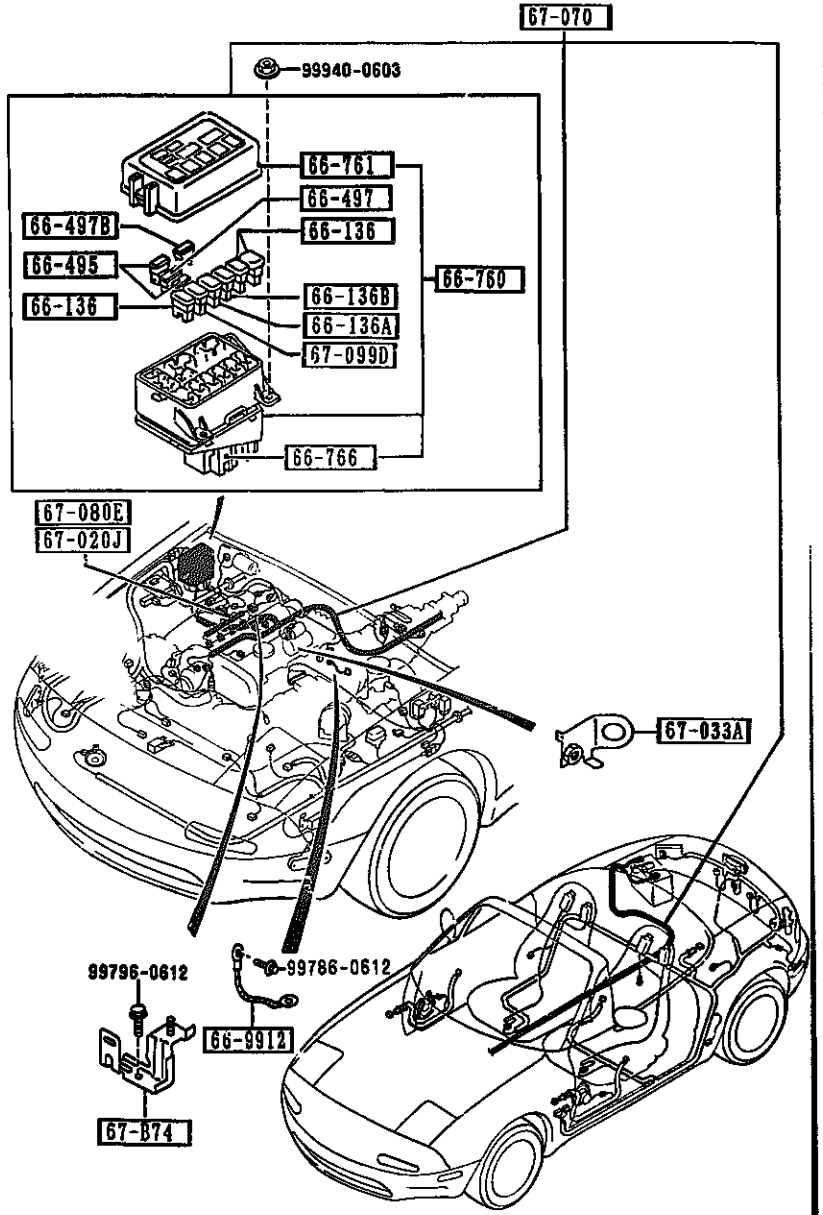

AUNA03

PART NO.	QTY	MODEL/RESTRICTION	MODEL/RESTRICTION	MODEL/RESTRICTION	FROM-TO
66-136		FUSE(30A)			
H115-67-099	3				
66-136A		FUSE(40A)			
H116-67-099	1				
66-136B		FUSE(80A)			
H117-67-099	1				
66-495		FUSE(10A)			
99705-1110	2				
66-497		FUSE(20A)			
99705-1120	1				
66-497B		FUSE(30A)			
99705-1130	1				
66-760		BLOCK,MAIN FUSE			
NA01-66-760B	1	(W/O A.LOCK BRAKE)			
NA23-66-760	1	(A.LOCK BRAKE)			
66-761		COVER,MAIN FUSE BLOCK YAZAKI			
NA02-66-7623	1	(W/O A.LOCK BRAKE)			
NA23-66-762	1	(A.LOCK BRAKE)			
66-766		COVER,UNDER-MAIN FUSE BLK			
B465-66-767	1				
66-9912		WIRE,EARTH			
NA01-67-EW1B	1				
67-B74		BRACKET,HARNESS			
NA01-67-B80A	1				
67-020J		HARNESS,INJECTOR			
NA01-67-080C	1	(FED)			
67-033A		BRACKET,WIRING			
NA01-67-B10B	1				

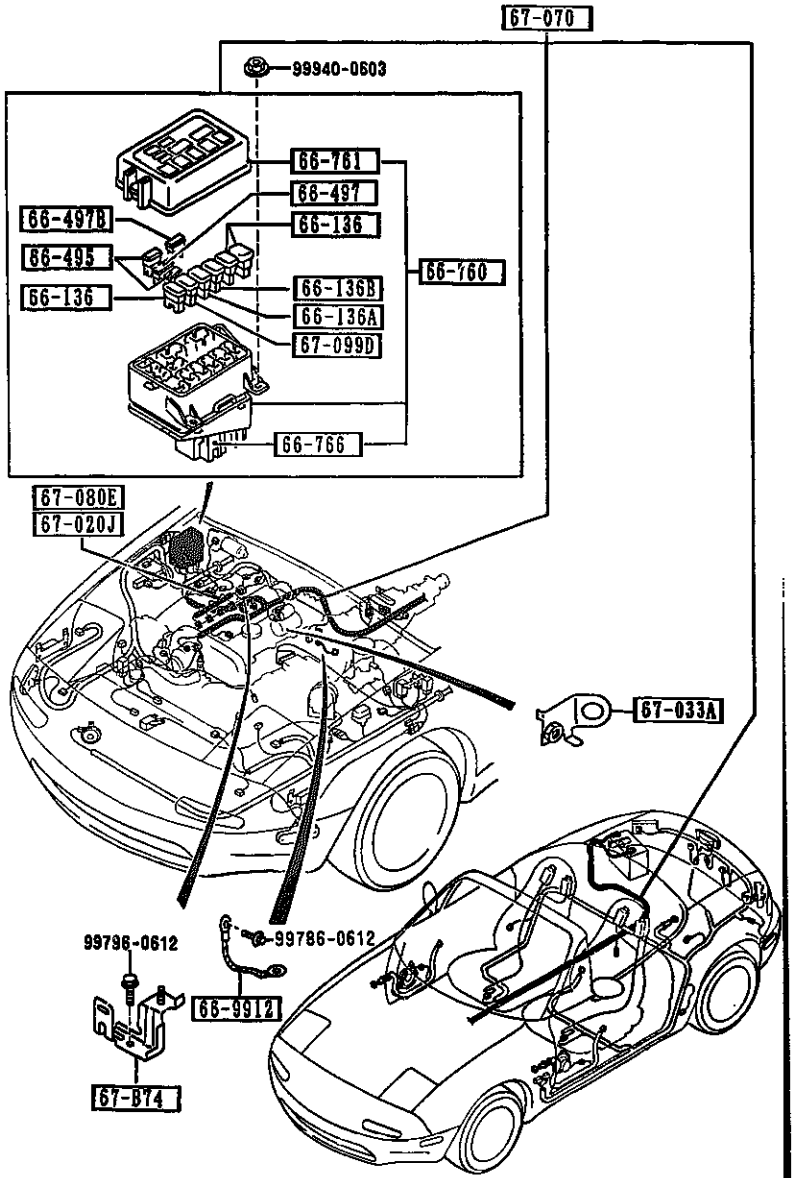

AUNA03

6701 -2 * WIRING HARNESSES(ENGINE & T/MISSION)

PART NO.	QTY	MODEL/RESTRICTION	MODEL/RESTRICTION	MODEL/RESTRICTION	FROM-TO
67-070		HARNESS,ENGINE			
NA01-67-070L	1	((W/O A.LOCK BRAKE))(MT)			
NA03-67-070E	1	((W/O A.LOCK BRAKE))(AT)			
NA23-67-070D	1	((A.LOCK BRAKE))(MT)			
NA25-67-070D	1	((A.LOCK BRAKE))(AT)			
67-080E		WIRING,INJECTOR			
NA36-67-080	1	(CALIF)			
67-099D		FUSE(60A)			
FB01-67-099	1	60A (A.LOCK BRAKE)			

CAT. AUNA03-04

1994-10



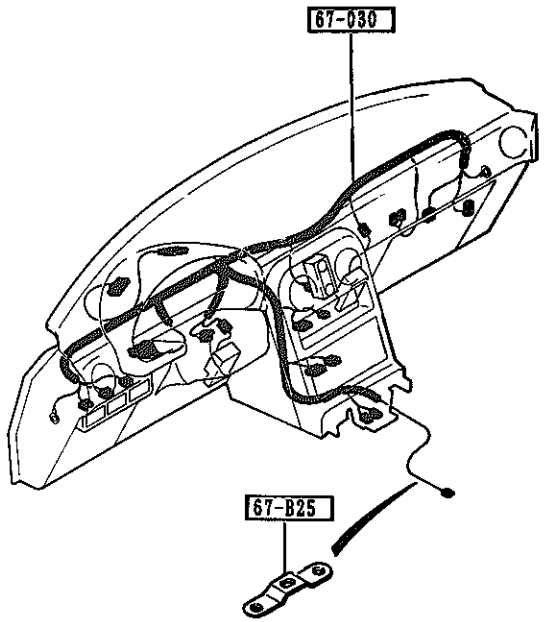

6702 -1 * WIRING HARNESSES(DASHBOARD)

PART NO.	QTY	MODEL/RESTRICTION	MODEL/RESTRICTION	MODEL/RESTRICTION	FROM-TO
67-B25		BRACKET,HARNESS			
NA01-67-B31	1	(MT)			
67-030		HARNESS,INSTRUMENT			
NA36-67-030B	1	(W/SENSORY SOUND) (MT)			
NA55-67-030	1	RICO-20TH-ANV., (W/O SENSORY SOUND) (MT)			
NA40-67-030B	1	(W/SENSORY SOUND) (AT)			-3401
NA57-67-030	1	(W/O SENSORY SOUND) (AT)			-3401
NA40-67-030C	1	(W/SENSORY SOUND) (AT)			3401-
NA57-67-030A	1	(W/O SENSORY SOUND) (AT)			3401-

3401 NA351K-418700

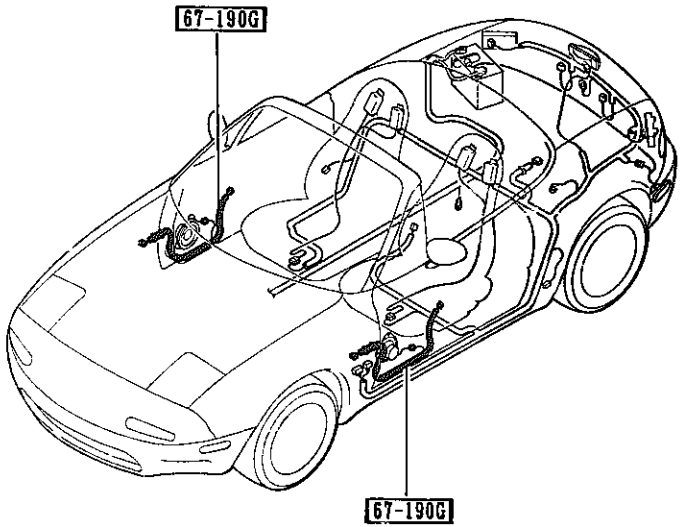

6703 -1 * WIRING HARNESSES(DOOR,FLOOR/CEILING)

PART NO.	QTY	MODEL/RESTRICTION	MODEL/RESTRICTION	MODEL/RESTRICTION	FROM-TO
67-190G		HARNESS,DOOR			
NA01-67-190A	2	BASE, (W/O P.WIND,DR MIRRO R MANUAL, W/O SENSOR T SOUND)			
NA02-67-190A	2	BASE-OPT, (W/P.WIND,DR MIRROR MANUAL, W/O SENSORT SOUND)			
NA52-67-190B	2	BASE-OPT, (DR MIRROR MANUAL,W/ SENSORY SOUND)			
NA53-67-190A	2	PKG-A, RICO-20TH-ANV , (DR MIRROR ELECT.,W/ O SENSORY SOUND)			
NA54-67-190B	2	OPT, (DR MIRROR ELECT.,W/ SENSORY SOUND)			