Parts Catalog

Mazda MX-5 MIATA U.S.A. ('94)

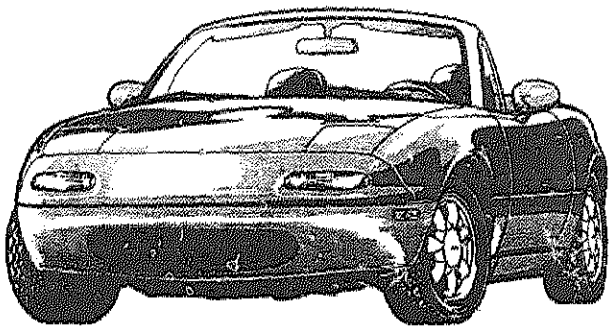

HA3***-500001-600000

Apr.'95 (FINAL)

Catalog No. AU-NA04-03

mazda

© 1995 Mazda Motor Corporation

LAYOUT OF CONTENTS / DISPOSITION TYPOGRAPHIQUE DE CONTENU / DISPOSICION DEL CONTENIDO / ANORDNUNG DES INHALTS

- The following is a typical example of the layout of contents of Mazda microfiche parts catalog.
- Voici un exemple typique de la disposition typographique de contenu dans les microfiches du catalogue des pièces de Mazda.
- El siguiente es un ejemplo típico de la disposición del contenido en una microficha del catálogo de repuestos de Mazda.
- Folgendes ist ein typisches Beispiel der Inhaltsanordnung des Mazda-Mikrofiche Teilekatalogs.

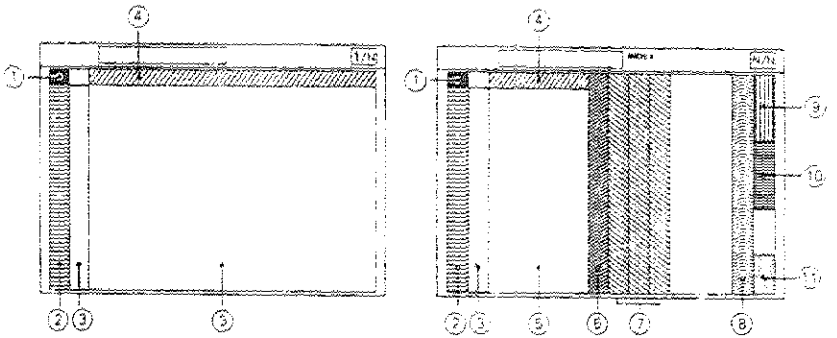

Remark : The items listed under ④ have been deleted from each fiche since Dec. '93

① · Layout of contents
· Disposition Typographique de Contenu
· Disposición del contenido
· Anordnung des Inhalts

② · Pictorial Index
· Index par Schémas
· Indice Gráfico
· Illustrierter Index

③ · Master Section No. Index
· Index des Numéros des Sections Totale
· Indice del Número de la Sección Maéstra
· Hauptabschnittsnummer-Index

~~④ · Section No. Index for the Column~~
~~· Index des Numéros des Sections pour les Colonnes~~
~~· N° de la Sección para el Indice~~
~~· Abschnittsnummer-Index für die Spalte~~

⑤ · Illustration I...
· Illustrations ...
· Ilustración y Texto
· Abbildung und Text

⑥ · Part No. Index
· Index des Numéros des Pièces
· Indice del N° de Pieza
· Teile-Nr.-Index

⑦ · Alphabetical Index
· Index Alphabétique
· Indice Alfabético
· Alphabetischer Index

⑧ · Model Identification
· Identification des Modèles
· Identificación del Modelo
· Modell-Kennzeichnung

⑨ · Vehicle Identification System
· Système d'Identification de Véhicule
· Sistema de Identificación de Vehículo
· Fahrzeug-Identifikations-system

PICTORIAL INDEX

GASOLINE ENGINE 4 - CYLINDER (1/2)

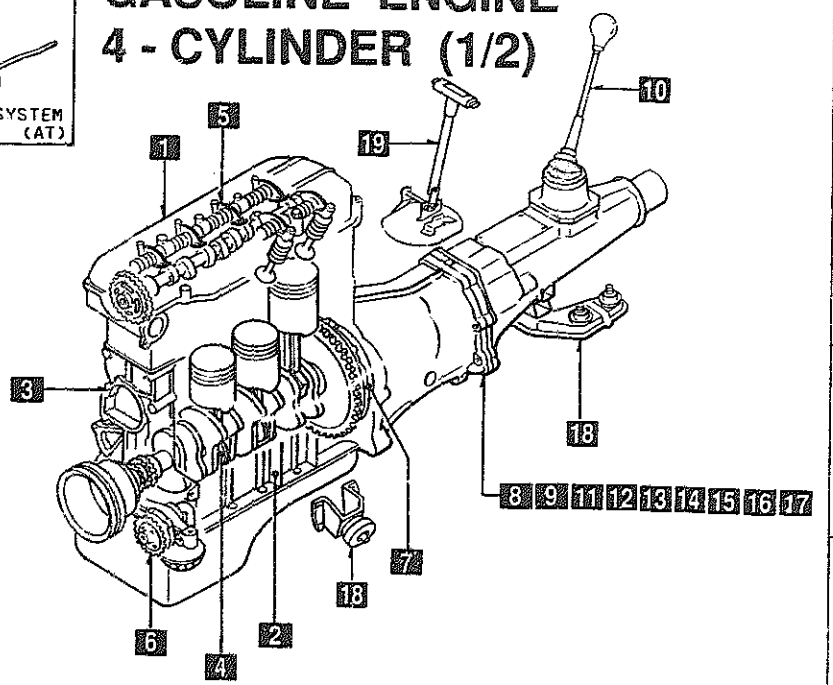

As this illustration is prepared to be applicable to all models, some parts are different in specifications from parts listed in this parts Catalog.

1000
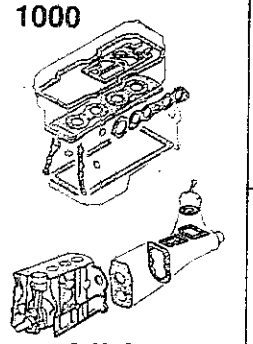
ENGINE & GASKET SETS

1 1010
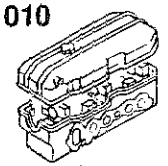
CYLINDER HEAD & COVER

2 1030
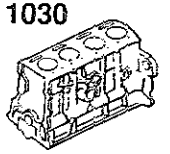
CYLINDER BLOCK

3 1040
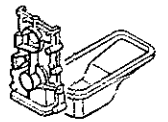
OIL PAN & TIMING COVER

4 1100
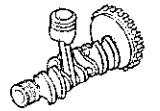
PISTON, CRANKSHAFT & FLYWHEEL

5 1200
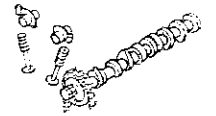
VALVE SYSTEM

19 4600
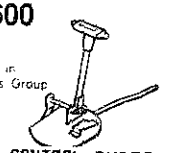

CHANGE CONTROL SYSTEM (AT)

6 1400
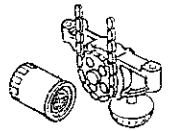
OIL PUMP & FILTER

18 3900
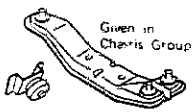

ENGINE & T/MISSION MOUNTINGS

7 1600
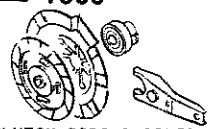
CLUTCH DISC & COVER (MANUAL)

17 1960
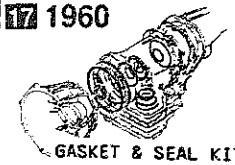
GASKET & SEAL KIT (AUTOMATIC)

8 1700
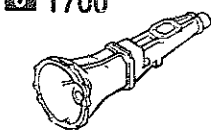
TRANSMISSION CASE (MANUAL)

16 1950
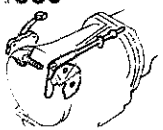
MANUAL LINKAGE SYSTEM (AUTOMATIC)

9 1710
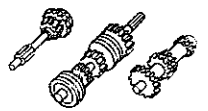
TRANSMISSION GEARS (MANUAL)

15 1940
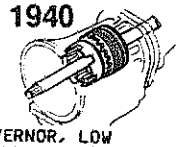
GOVERNOR, LOW & REVERSE PISTON (AUTOMATIC)

14 1930
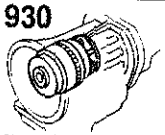
CLUTCHES & PLANETARY GEARS (AUTOMATIC)

13 1925

CONTROL VALVE (AUTOMATIC)

12 1920
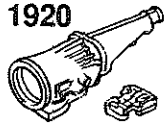
TRANSMISSION CASE & MAIN CONTROL SYSTEM (AUTOMATIC)

11 1910
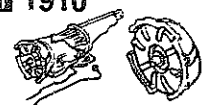
TORQUE CONVERTER, OIL PUMP & PIPINGS (AUTOMATIC)

10 1720
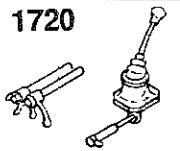
CHANGE CONTROL SYSTEM (MANUAL)

PICTORIAL INDEX

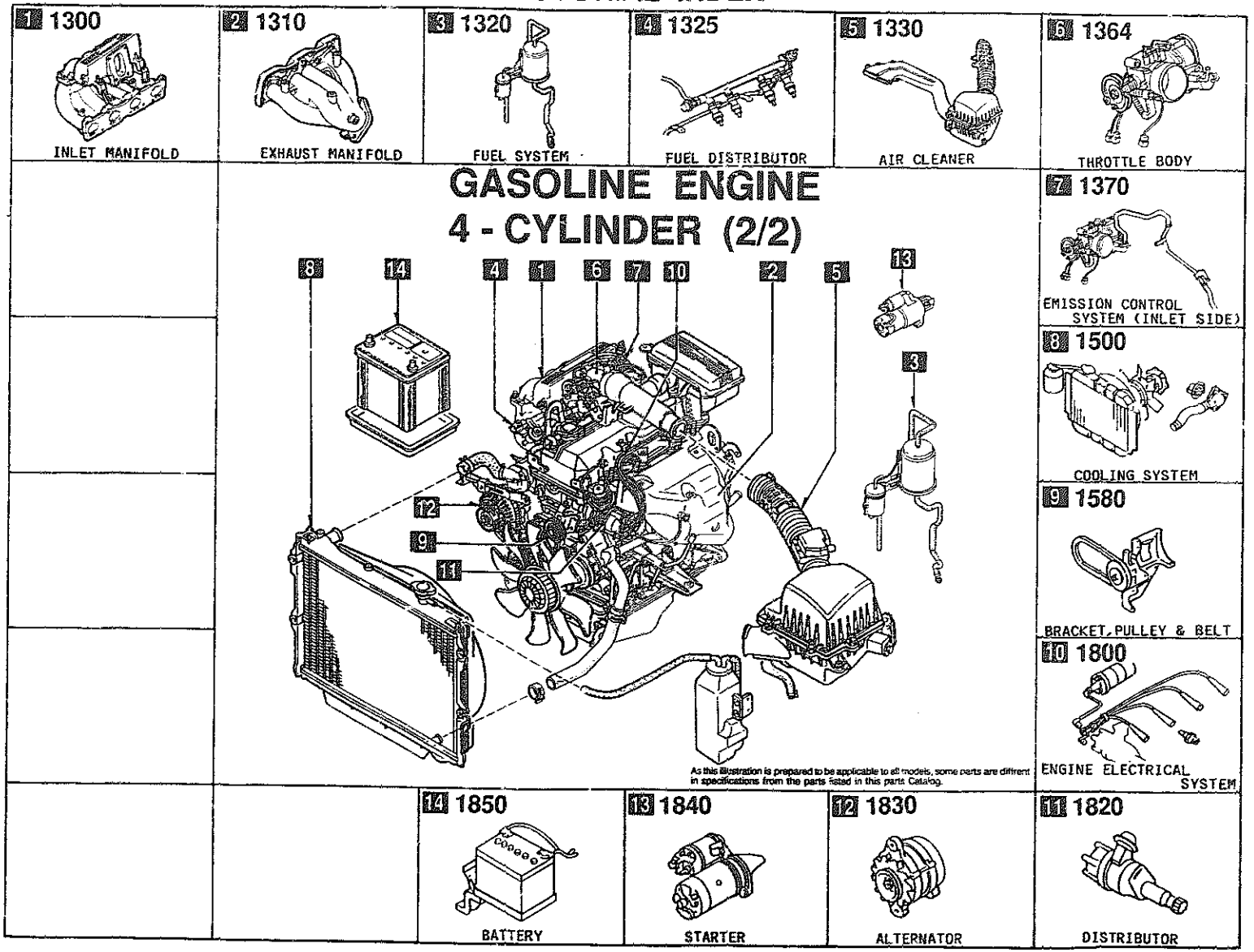

PICTORIAL INDEX

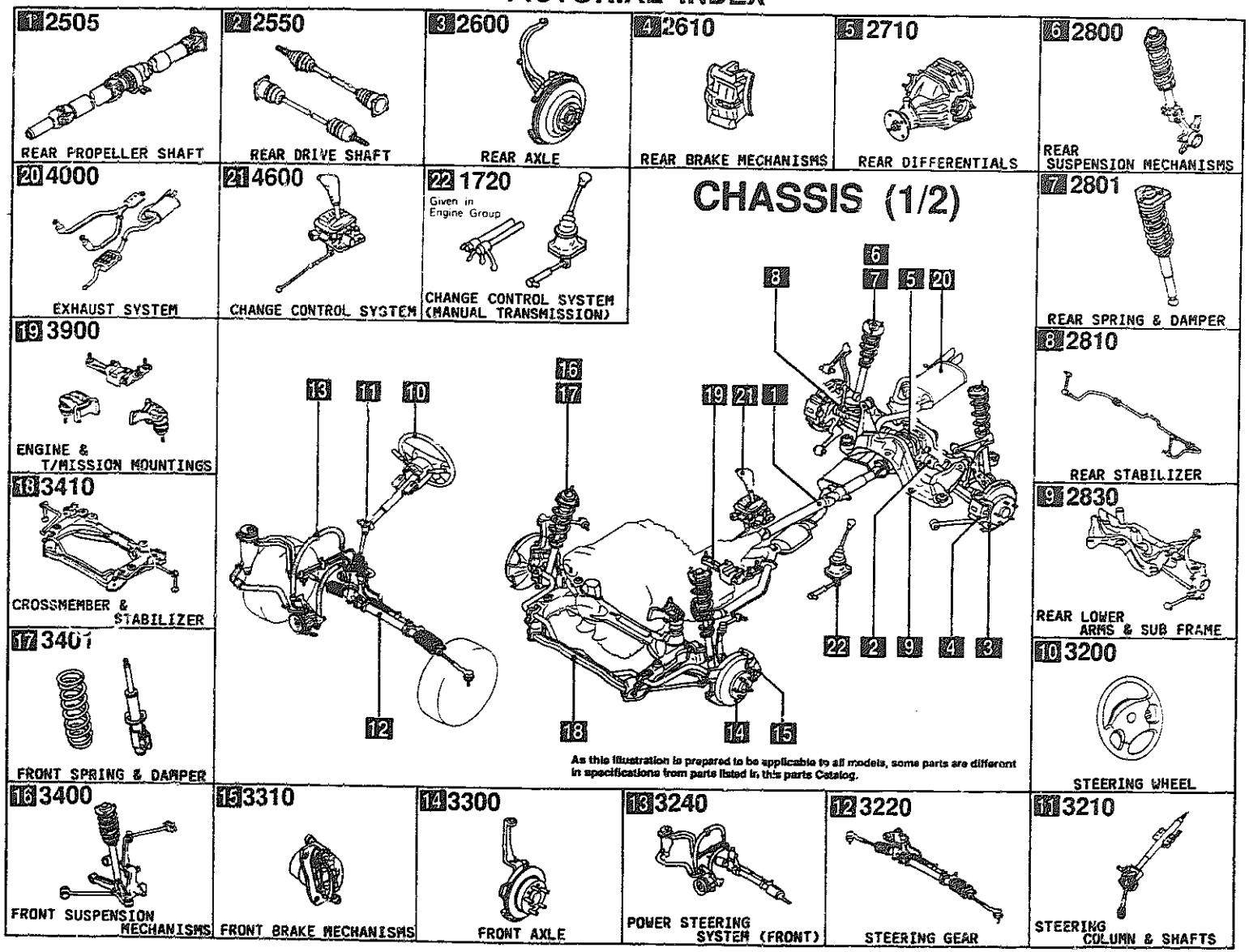

PICTORIAL INDEX

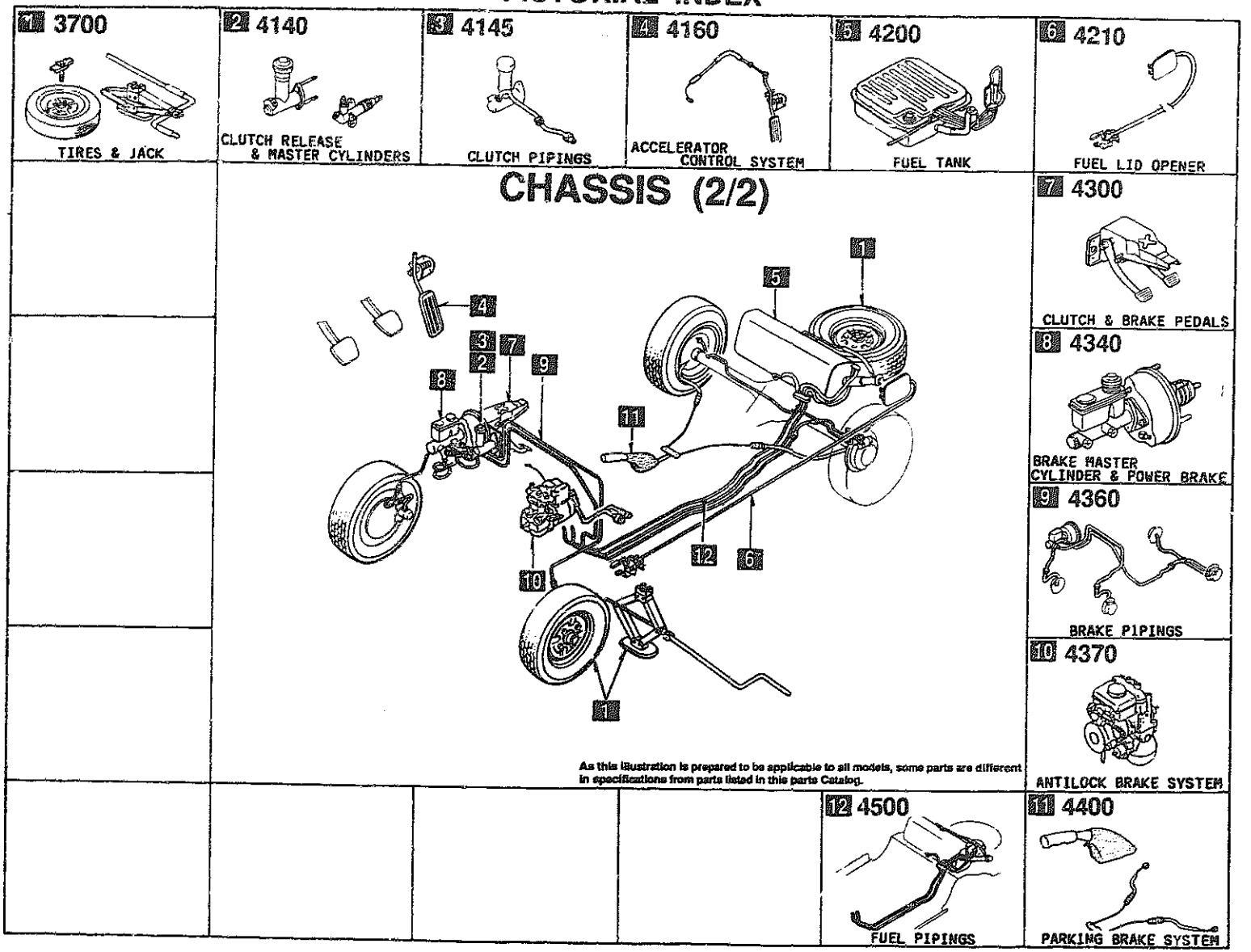

PICTORIAL INDEX

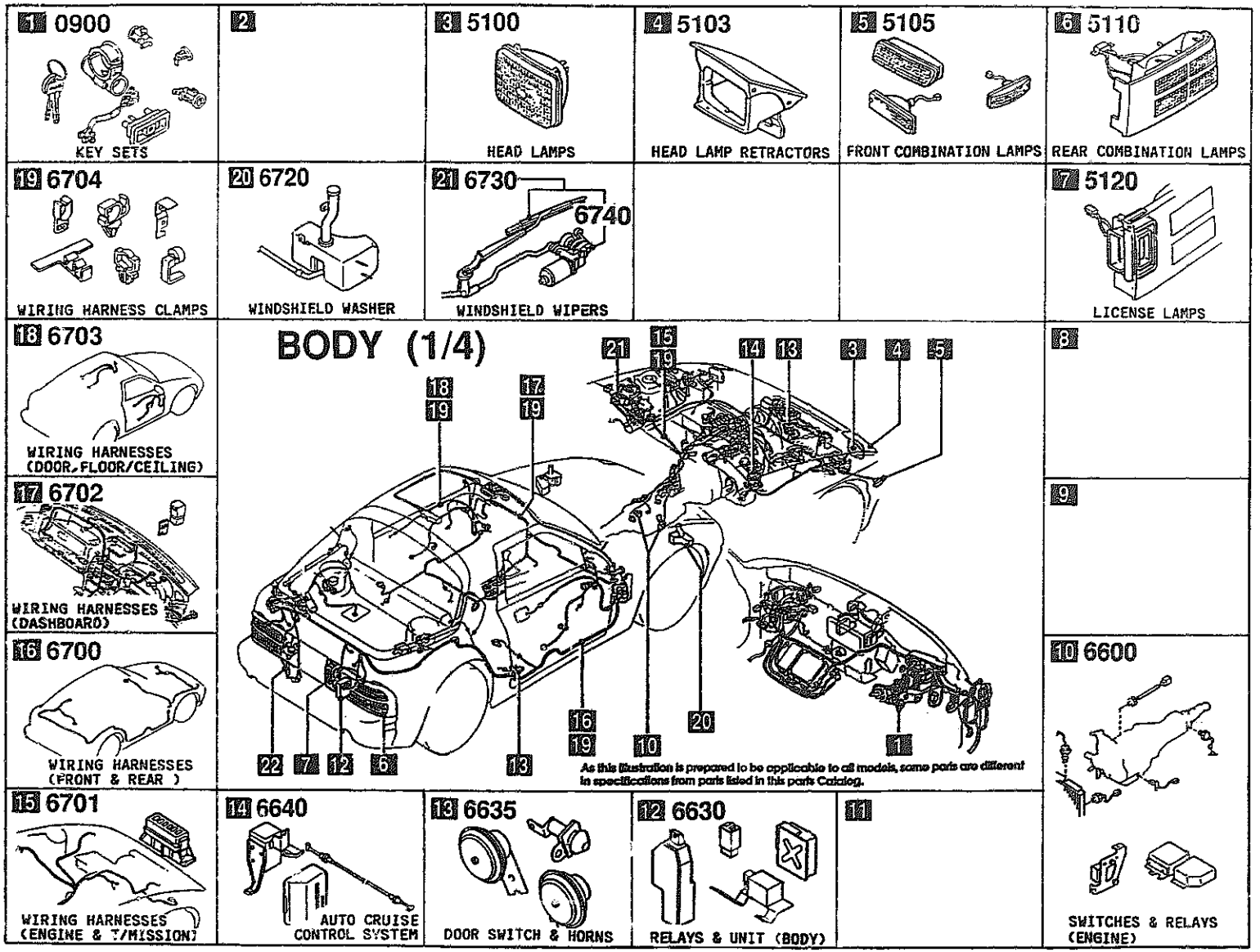

PICTORIAL INDEX

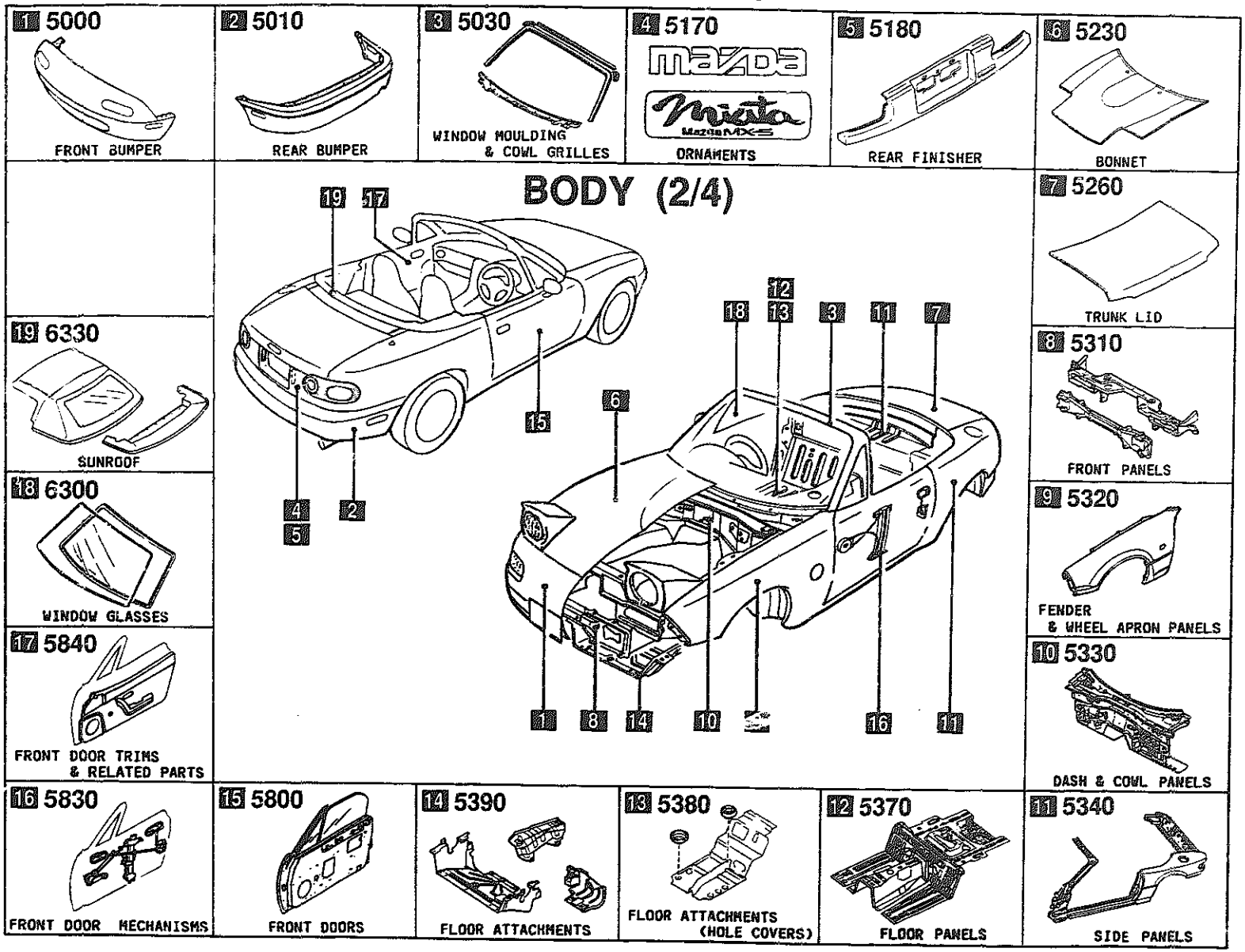

PICTORIAL INDEX

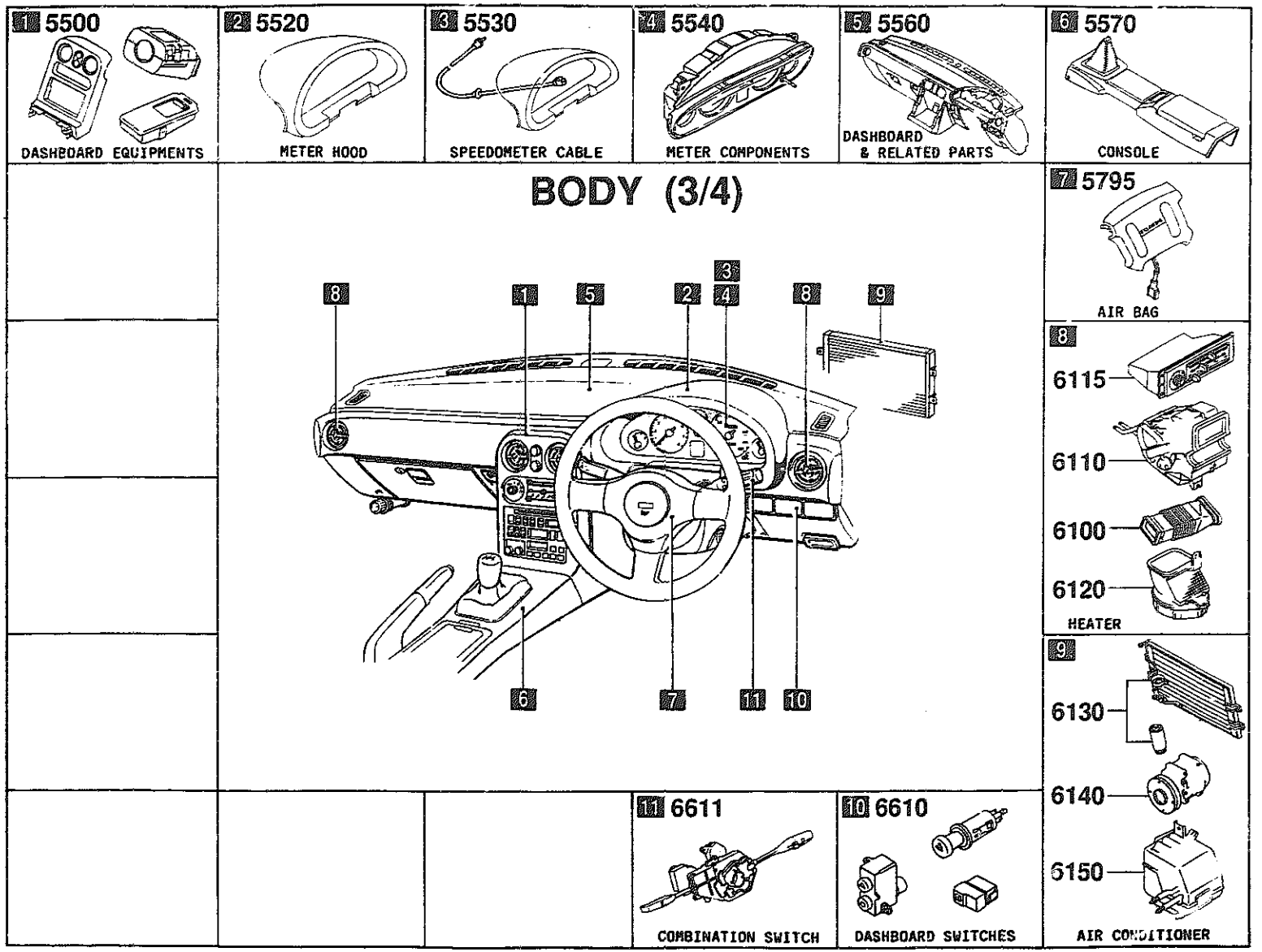

PICTORIAL INDEX

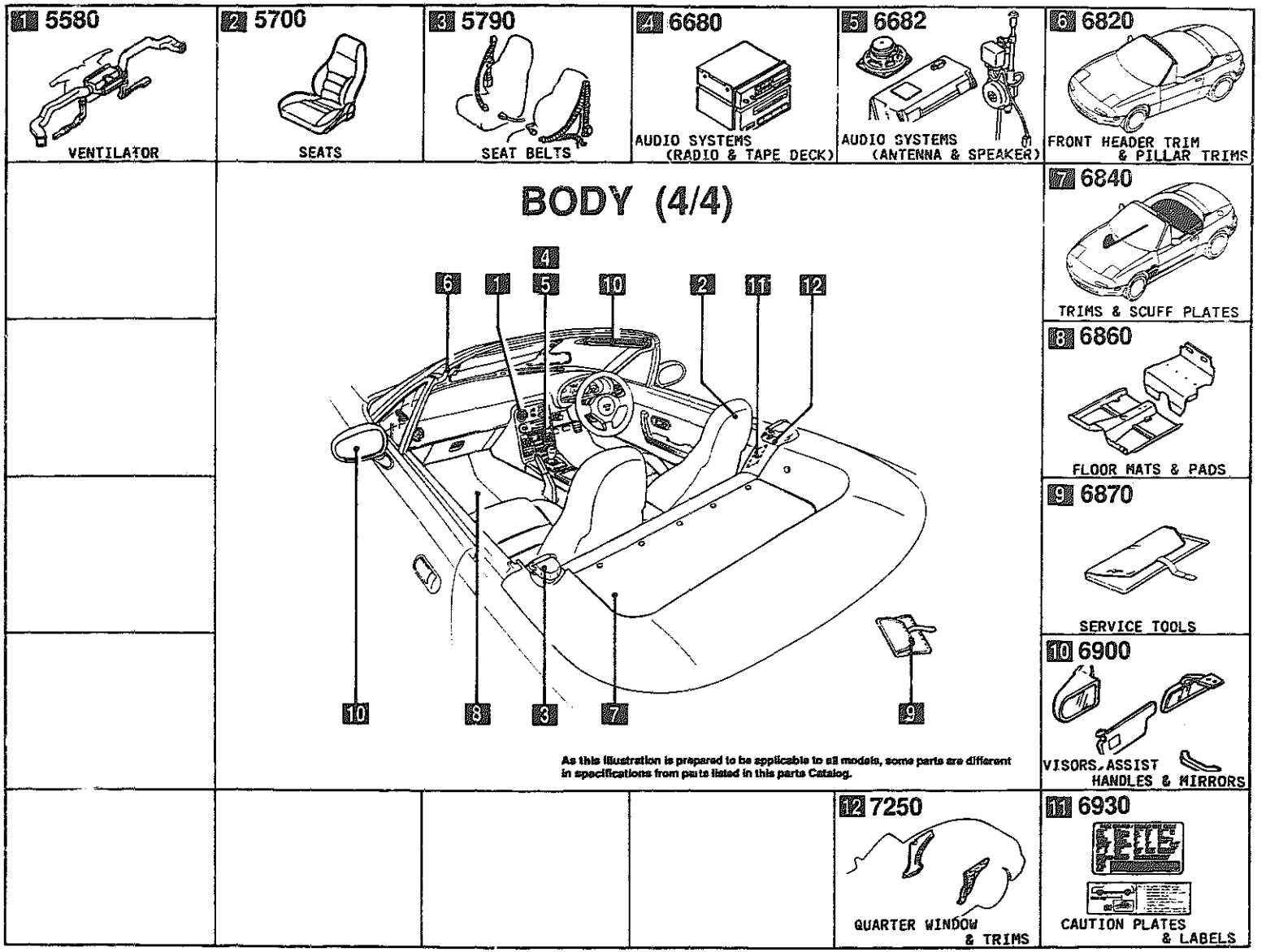

SECTION NAME INDEX (ENGINE)

LO.NO	SEC.NO	SECTION NAME	LO.NO	SEC.NO	SECTION NAME	LO.NO	SEC.NO	SECTION NAME
1-C03	1000	ENGINE & GASKET SETS	1-M09	1960	GASKET & SEAL KIT (AUTOMATIC)			
1-E03	1010	CYLINDER HEAD & COVER						
1-H03	1030	CYLINDER BLOCK						
1-I03	1040	OIL PAN & TIMING COVER						
1-K03	1100	PISTON,CRANKSHAFT & FLYWHEEL						
1-N03	1200	VALVE SYSTEM						
1-D04	1300	INLET MANIFOLD						
1-E04	1310	EXHAUST MANIFOLD						
1-F04	1320	FUEL SYSTEM						
1-H04	1325	FUEL DISTRIBUTOR						
1-I04	1330	AIR CLEANER						
1-K04	1364	THROTTLE BODY						
1-L04	1370	EMISSION CONTROL SYSTEM (INLET SIDE)						
1-N04	1400	OIL PUMP & FILTER						
1-D05	1500	COOLING SYSTEM						
1-G05	1580	BRACKET,PULLEY & BELT						
1-C06	1600	CLUTCH DISC & COVER (MANUAL)						
1-D06	1700	TRANSMISSION CASE (MANUAL)						
1-E06	1710	TRANSMISSION GEARS(MANUAL)						
1-J06	1720	CHANGE CONTROL SYSTEM (MANUAL)						
1-M06	1800	ENGINE ELECTRICAL SYSTEM						
1-C07	1830	ALTERNATOR						
1-E07	1840	STARTER (MT)						
1-G07	1840 A	STARTER (AT)						
1-I07	1850	BATTERY						
1-J07	1910	TORQUE CONVERTER,OIL PUMP & PIPINGS (AUTOMATIC)						
1-M07	1920	TRANSMISSION CASE & MAIN CONTROL SYSTEM (AUTOMATIC)						
1-F08	1925	CONTROL VALVE (AUTOMATIC)						
1-M08	1930	CLUTCHES & PLANETARY GEARS (AUTOMATIC)						
1-H09	1940	GOVERNOR, LOW & REVERSE PISTON (AUTOMATIC)						
1-K09	1950	MANUAL LINKAGE SYSTEM (AUTOMATIC)						

CATLOG-NO= AUNA04-03

DATE. 1995-04

SECTION NAME INDEX (CHASSIS)

LO.NO	SEC.NO	SECTION NAME
1-C11	2505	REAR PROPELLER SHAFT
1-D11	2550	REAR DRIVE SHAFT
1-E11	2600	REAR AXLE
1-F11	2610	REAR BRAKE MECHANISMS
1-H11	2710	REAR DIFFERENTIALS (NORMAL DIFF.)
1-L11	2710 A	REAR DIFFERENTIALS (LIMITED SLIP DIFF.)
1-C12	2800	REAR SUSPENSION MECHANISMS
1-D12	2801	REAR SPRING & DAMPER
1-E12	2810	REAR STABILIZER
1-F12	2830	REAR LOWER ARMS & SUB FRAME
1-H12	3200	STEERING WHEEL
1-I12	3210	STEERING COLUMN & SHAFTS
1-J12	3220	STEERING GEAR (W/O POWER STEERING)
1-L12	3220 A	STEERING GEAR (W/ POWER STEERING)
1-C13	3240	POWER STEERING SYSTEM
1-E13	3300	FRONT AXLE (W/O ANTI LOCK BRAKE SYSTEM)
1-F13	3300 A	FRONT AXLE (ANTI LOCK BRAKE SYSTEM)
1-G13	3310	FRONT BRAKE MECHANISMS
1-H13	3400	FRONT SUSPENSION MECHANISMS
1-J13	3401	FRONT SPRING & DAMPER
1-K13	3410	CROSSMEMBER & STABILIZER
1-L13	3700	TIRES & JACK
1-C14	3900	ENGINE & T/MISSION MOUNTINGS
1-D14	4000	EXHAUST SYSTEM
1-E14	4140	CLUTCH RELEASE & MASTER CYLINDERS (MANUAL TRANSMISSION)
1-F14	4145	CLUTCH PIPINGS (MANUAL TRANSMISSION)
1-G14	4160	ACCELERATOR CONTROL SYSTEM
1-H14	4200	FUEL TANK
1-K14	4210	FUEL LID OPENER
1-L14	4300	CLUTCH & BRAKE PEDALS (MANUAL TRANSMISSION)
1-C15	4300A	BRAKE PEDALS (AUTOMATIC TRANSMISSION)
1-E15	4340	BRAKE MASTER CYLINDER & POWER BRAKE (W/O ANTI LOCK BRAKE SYSTEM)
1-G15	4340 A	BRAKE MASTER CYLINDER & POWER BRAKE (ANTI LOCK BRAKE SYSTEM)
1-I15	4360	BRAKE PIPINGS (W/O ANTI LOCK BRAKE SYSTEM)
1-K15	4360 A	BRAKE PIPINGS (ANTI LOCK BRAKE SYSTEM)
1-M15	4370	ANTILOCK BRAKE SYSTEM
1-C16	4400	PARKING BRAKE SYSTEM
1-E16	4500	FUEL PIPINGS
1-G16	4600	CHANGE CONTROL SYSTEM (AT)

SECTION NAME INDEX (BODY)

LO.NO	SEC.NO	SECTION NAME
2-C03	0900	KEY SETS
2-E03	5000	FRONT BUMPER
2-H03	5010	REAR BUMPER
2-J03	5030	WINDOW MOULDING & COWL GRILLES
2-K03	5100	HEAD LAMPS
2-L03	5103	HEAD LAMP RETRACTORS
2-C04	5105	FRONT COMBINATION LAMPS
2-E04	5110	REAR COMBINATION LAMPS
2-H04	5120	LICENSE LAMPS
2-I04	5170	ORNAMENTS
2-J04	5180	REAR FINISHER
2-K04	5230	BONNET
2-M04	5260	TRUNK LID
2-N04	5310	FRONT PANELS
2-C05	5320	FENDER & WHEEL APRON PANELS
2-E05	5330	DASH & COWL PANELS
2-F05	5340	SIDE PANELS
2-K05	5370	FLOOR PANELS
2-N05	5380	FLOOR ATTACHMENTS (HOLE COVERS)
2-C06	5390	FLOOR ATTACHMENTS
2-C07	5500	DASHBOARD EQUIPMENTS
2-E07	5520	METER HOOD
2-F07	5530	SPEEDOMETER CABLE
2-G07	5540	METER COMPONENTS
2-I07	5560	DASHBOARD & RELATED PARTS
2-L07	5570	CONSOLE
2-C08	5580	VENTILATOR
2-E08	5700	SEATS
2-F08	5790	SEAT BELTS
2-G09	5795	AIR BAG
2-J09	5800	FRONT DOORS
2-M09	5830	FRONT DOOR MECHANISMS
2-E10	5840	FRONT DOOR TRIMS & RELATED PARTS
2-C11	6100	HEATER
2-D11	6110	HEATER UNIT COMPONENTS
2-E11	6115	HEATER CONTROLS COMPONENTS
2-F11	6120	HEATER BLOWER COMPONENTS
2-G11	6130	AIR CONDITIONER
2-K11	6140	COMPRESSOR COMPONENTS (AIR CONDITIONER)
2-M11	6150	COOLING UNIT (AIR CONDITIONER)
2-N11	6300	WINDOW GLASSES
2-C12	6330	SUNROOF
2-N12	6600	SWITCHES & RELAYS (ENGINE)
2-E13	6610	DASHBOARD SWITCHES
2-F13	6611	COMBINATION SWITCH
2-G13	6630	RELAYS & UNIT (BODY)
2-I13	6635	DOOR SWITCH & HORNS
2-J13	6640	AUTO CRUISE CONTROL SYSTEM
2-K13	6680	AUDIO SYSTEMS (RADIO & TAPE DECK)
2-D14	6682	AUDIO SYSTEMS (ANTENNA & SPEAKER)
2-G14	6700	WIRING HARNESSES(FRONT & REAR)
2-I14	6701	WIRING HARNESSES(ENGINE & T/MISSION)
2-J14	6702	WIRING HARNESSES(DASHBOARD)
2-K14	6703	WIRING HARNESSES(DOOR,FLOOR/CEILING)
2-L14	6704	WIRING HARNESS CLAMPS
2-C15	6720	WINDSHIELD WASHER (W/O ANTI LOCK BRAKE SYSTEM)
2-E15	6720 A	WINDSHIELD WASHER (ANTI LOCK BRAKE SYSTEM)
2-H15	6730	WINDSHIELD WIPERS
2-J15	6740	WIPER MOTOR COMPONENTS(FRONT)
2-K15	6820	FRONT HEADER TRIM & PILLAR TRIMS
2-L15	6840	TRIMS & SCUFF PLATES
2-N15	6860	FLOOR MATS & PADS
2-D16	6870	SERVICE TOOLS
2-E16	6900	VISORS,ASSIST HANDLES & MIRRORS
2-G16	6930	CAUTION PLATES & LABELS
2-I16	7250	QUARTER WINDOW & TRIMS

10-271S

1-SEAL, VALVE ..... (8)
2-SEAL, VALVE ..... (8)
3-GASKET, HEAD COVER ..... (1)
4-GASKET, CYLINDER HEAD ..... (1)
5-GASKET, OIL PAN ..... (1)
6-GASKET, OIL PAN ..... (1)
7-GASKET (L) ..... (1)
8-GASKET (INN), TIMING BELT (L) ..... (1)
9-GASKET (C), TIMING BELT (L) ..... (1)
10-GASKET, T. BELT COVER-C ..... (1)
11-RUBBER SEAL-SEAL PLATE ..... (1)
12-SEAL, OIL ..... (1)
13-SEAL, OIL ..... (2)
14-SEAL, OIL ..... (1)
15-GASKET, IN. MANIFOLD ..... (1)
16-GASKET, EX. MANIFOLD ..... (1)
17-RING, 'O' ..... (1)
18-GASKET, WATER PUMP ..... (1)
19-GASKET, W. PUMP INLET ..... (1)
20-GASKET, THERMOSTAT COVER ..... (1)
21-RING, 'O' ..... (1)

10-235S

1-SEAL, VALVE ..... (8)
2-SEAL, VALVE ..... (8)
3-GASKET, HEAD COVER ..... (1)
4-GASKET, CYLINDER HEAD ..... (1)
12-SEAL, OIL ..... (1)
13-SEAL, OIL ..... (2)
15-GASKET, IN. MANIFOLD ..... (1)
16-GASKET, EX. MANIFOLD ..... (1)
20-GASKET, THERMOSTAT COVER ..... (1)

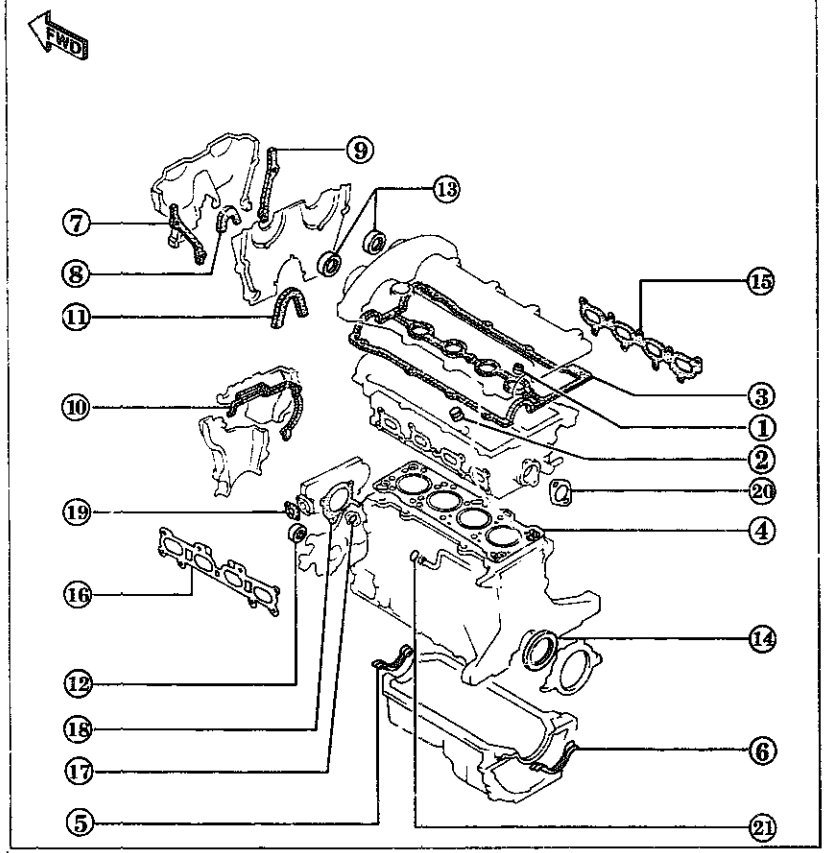

AUNA04

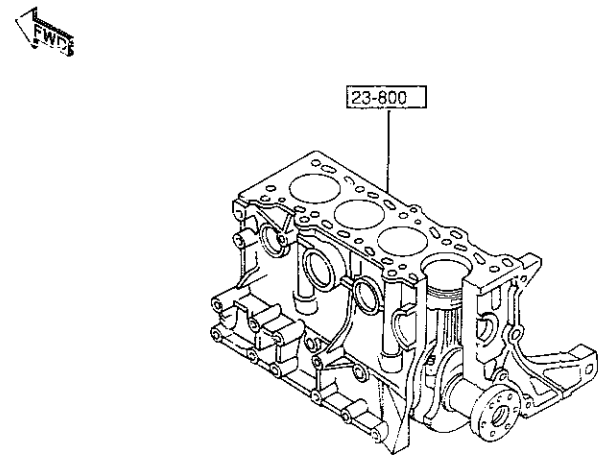

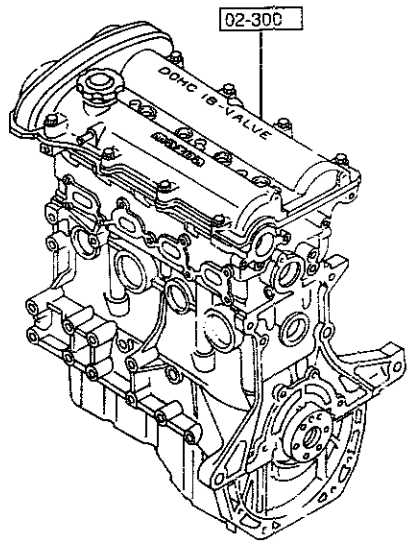

AUNA04

10-271S

1-SEAL, VALVE ..... (8)
2-SEAL, VALVE ..... (8)
3-GASKET, HEAD COVER ..... (1)
4-GASKET, CYLINDER HEAD ..... (1)
5-GASKET, OIL PAN ..... (1)
6-GASKET, OIL PAN ..... (1)
7-GASKET (L) ..... (1)
8-GASKET (INN), TIMING BELT (L) .. (1)
9-GASKET (C), TIMING BELT (L) .... (1)
10-GASKET, T. BELT COVER-C ..... (1)
11-RUBBER SEAL-SEAL PLATE ..... (1)
12-SEAL, OIL ..... (1)
13-SEAL, OIL ..... (2)
14-SEAL, OIL ..... (1)
15-GASKET, IN. MANIFOLD ..... (1)
16-GASKET, EX. MANIFOLD ..... (1)
17-RING, 'O' ..... (1)
18-GASKET, WATER PUMP ..... (1)
19-GASKET, W. PUMP INLET ..... (1)
20-GASKET, THERMOSTAT COVER ..... (1)
21-RING, 'O' ..... (1)

10-235S

1-SEAL, VALVE ..... (8)
2-SEAL, VALVE ..... (8)
3-GASKET, HEAD COVER ..... (1)
4-GASKET, CYLINDER HEAD ..... (1)
12-SEAL, OIL ..... (1)
13-SEAL, OIL ..... (2)
15-GASKET, IN. MANIFOLD ..... (1)
16-GASKET, EX. MANIFOLD ..... (1)
20-GASKET, THERMOSTAT COVER ..... (1)

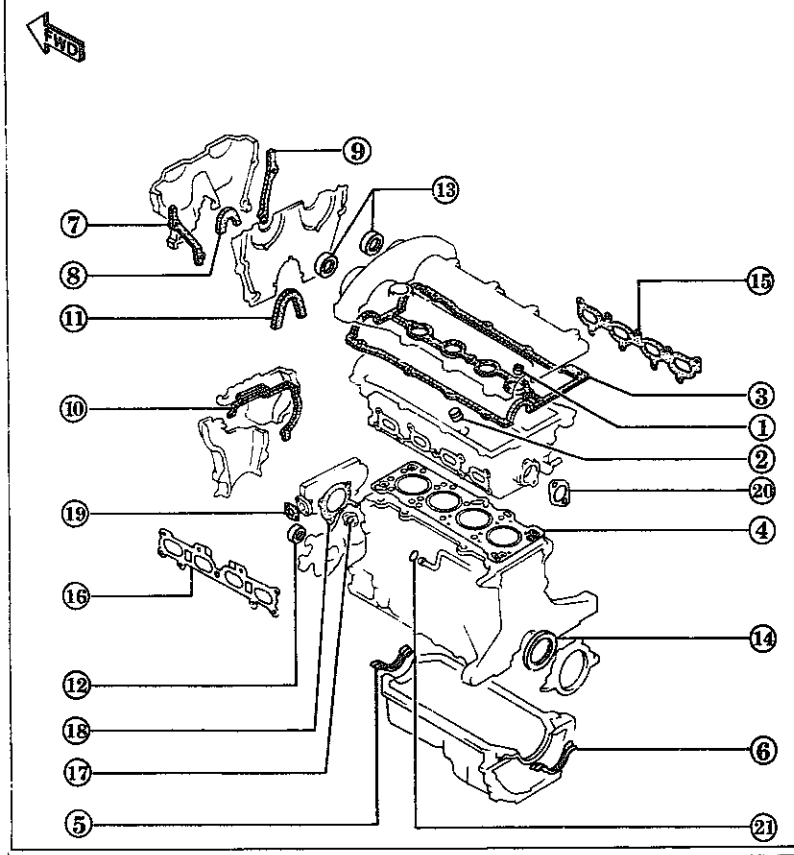

PART NO.	QTY	MODEL/RESTRICTION			
02-300		ENGINE,PARTIAL			
BPE8-02-300	1				4106-
10-235S		GASKET SET,CYL. HEAD			
8AN2-10-235	1				
10-271S		GASKET SET,ENGINE			
8AN2-10-271	1				
23-800		ENGINE,SHORT			
BPF1-02-200 AN(BPF1-02-200A)	1				-3B01
BPF1-02-200A	1				3B01-

3B01 NA3***-505807
4106 NA3***-509503

1010 CYLINDER HEAD & COVER

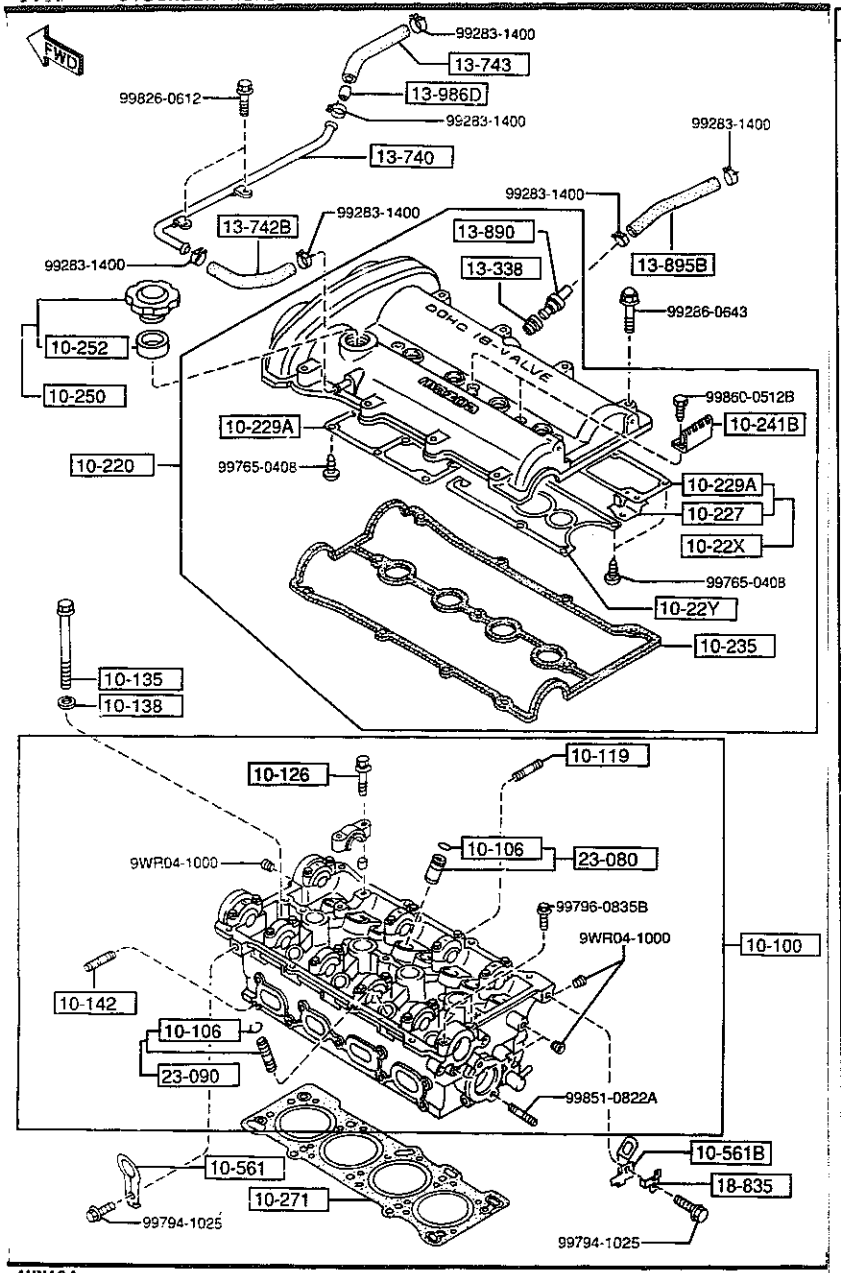

AUNA04

PART NO.	QTY	MODEL/RESTRICTION	MODEL/RESTRICTION	MODEL/RESTRICTION	REMARKS
10-100		HEAD,CYLINDER			
BPE8-10-100A	1				
10-106		CLIP,VALVE GUIDE			
B660-10-106	16				
10-119		STUD			
FE4J-13-146	9				
10-126		BOLT,CAMSHAFT CAP			
B660-10-126	20				
10-135		BOLT,CYLINDER HEAD			
B660-10-135A	10				
10-138		WASHER,PLAIN CYL. HEAD			
B630-10-138A	10				
10-142		STUD,EX. MANIFOLD			
B661-10-104	9				
10-22X		PLATE,OIL BAFFLE-IN. SIDE			
B61P-10-22X	1				
10-22Y		PLATE,OIL BAFFLE-EX.			
B6S7-10-22Y	1				
10-220		COVER,CYLINDER HEAD			
BPE8-10-210A	1				
10-227		PLATE,BAFFLE			
B61P-10-227	1				
10-229A		PLATE,OIL BAFFLE			
B6S7-10-225	2				
10-235		GASKET,HEAD COVER			
BP05-10-235B	1				
10-241B		PROTECTOR,HT.CORD-S. TANK			
B660-10-241	2				

CAT. AUNA04-03

1995-04

1010 CYLINDER HEAD & COVER

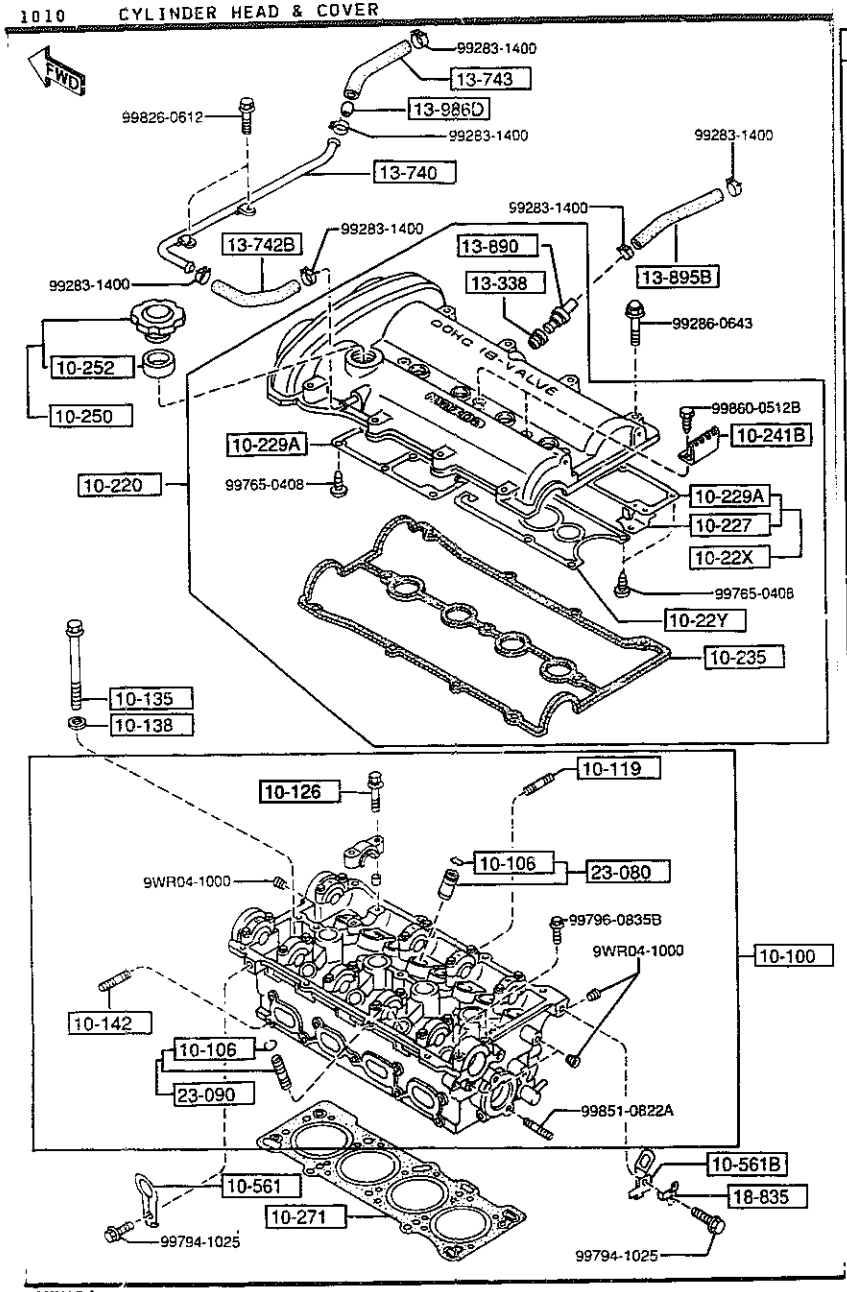

AUNA04

PART NO.	QTY	MODEL/RESTRICTION	MODEL/RESTRICTION	MODEL/RESTRICTION	FROM-TO
10-250		CAP,OIL FILLER			
0453-10-250A	1				
10-252		GASKET			
0324-10-252	1				
10-271		GASKET,CYLINDER HEAD			
BP26-10-271	1	NON ASBESTOS			
10-561		HANGER,ENGINE			
B660-10-561	1				
10-561B		HANGER,ENGINE-REAR			
BPE8-10-566A	1				
13-338		SEAL,RUBBER			
E301-13-338A	1				
13-740		HOSE,VENT.-PURGE CONT. V.			
BPE8-13-74X	1				
13-742B		HOSE,VENTILATION			
B61P-13-742A	1				
13-743		HOSE,VENTILATION			
BPE8-13-743	1				
13-890		VALVE,P.C.V.			
BP05-13-890	1				
13-895B		HOSE,P.C.V.			
BPE8-13-895	1				
13-986D		ORIFICE			
B61P-13-986	1				
18-835		BRACKET,WIRE CLIP-OXYGEN			
BPE8-18-838B	1				
23-080		GUIDE,VALVE			

CAT. AUNA04-03

1995-04

1010 CYLINDER HEAD & COVER

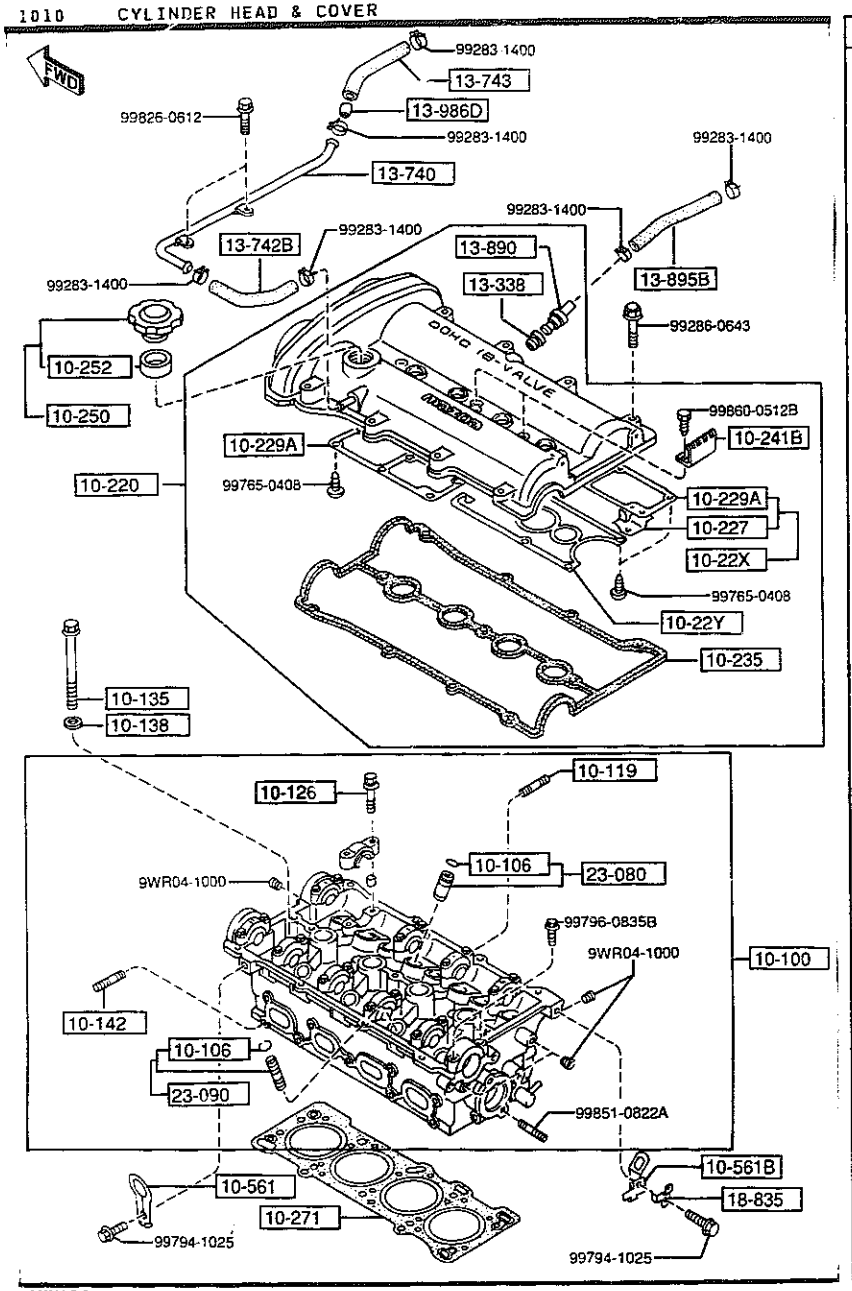

AUNA04

PART NO.	QTY	MODEL/RESTRICTION	MODEL/RESTRICTION	MODEL/RESTRICTION	REMARKS
CONT'D					
B6Z1-10-280	8				
| 23-090 |		GUIDE,VALVE			
BPY0-10-290	8				

CAT. AUNA04-03

1995-04

1030 CYLINDER BLOCK

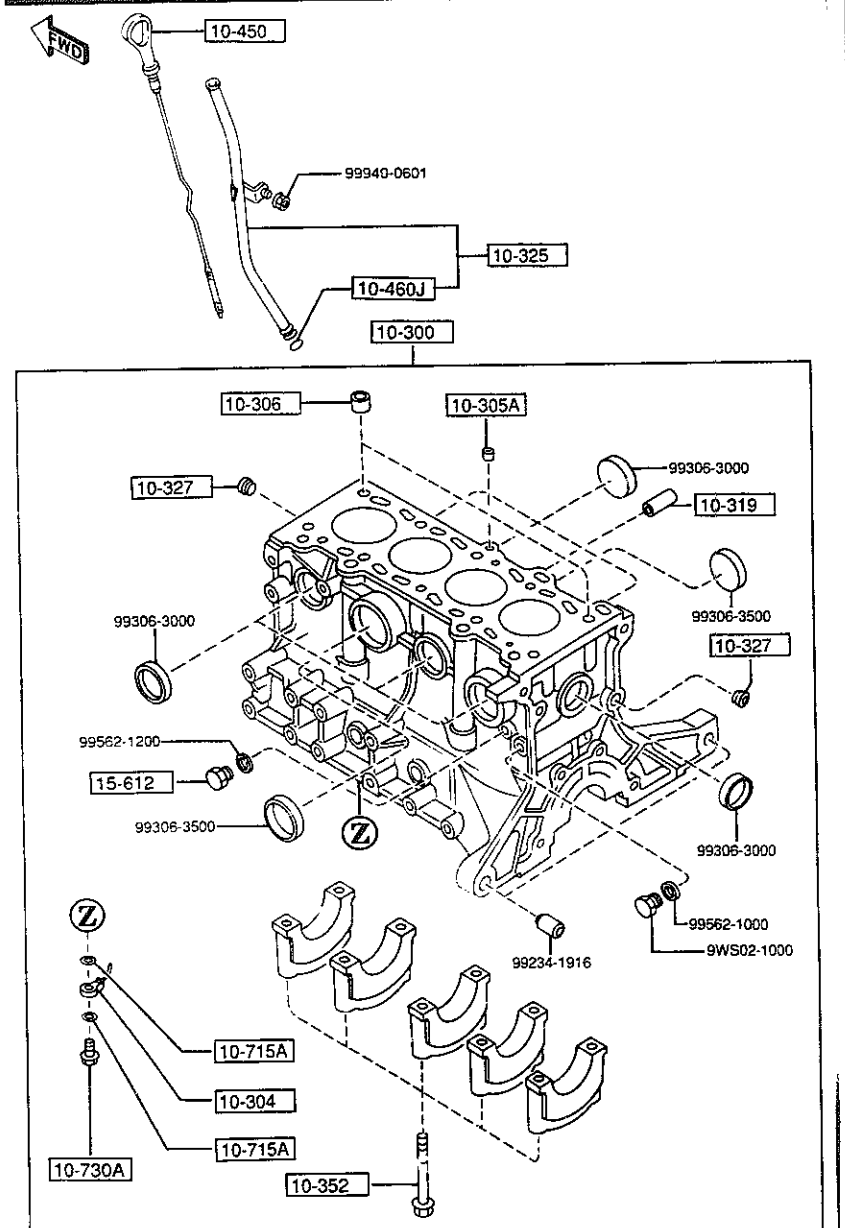

PART NO	QTY	MODEL/RESTRICTION	MODEL/RESTRICTION	MODEL/RESTRICTION	PROV-TO
10-300		BLOCK,CYLINDER			
BP05-10-300M	1				
10-304		JET,OIL			
BP01-10-580	4				
10-305A		PLUG			
B366-10-305	1				
10-306		PIN,TUBULAR			
B630-10-306	2				
10-319		JOINT			
E5B6-10-319C	1				
10-325		PIPE,OIL LEVEL GAUGE			
BPE8-10-440	1				
10-327		PLUG,BLIND			
0221-10-327	2				
10-352		BOLT,BEARING CAP			
B630-10-352	10				
10-450		GAUGE,OIL LEVEL			
BPE8-10-450	1				
10-460J		RING,'O'			
99541-00907	1				
10-715A		GASKET,OIL JET			
SE01-10-715	8				
10-730A		VALVE,OIL JET			
SE01-10-730	4				
15-612		PLUG			
SE01-15-612	1				

AUNA04

CAT. AUNA04-03 1995-04

1040 OIL PAN & TIMING COVER

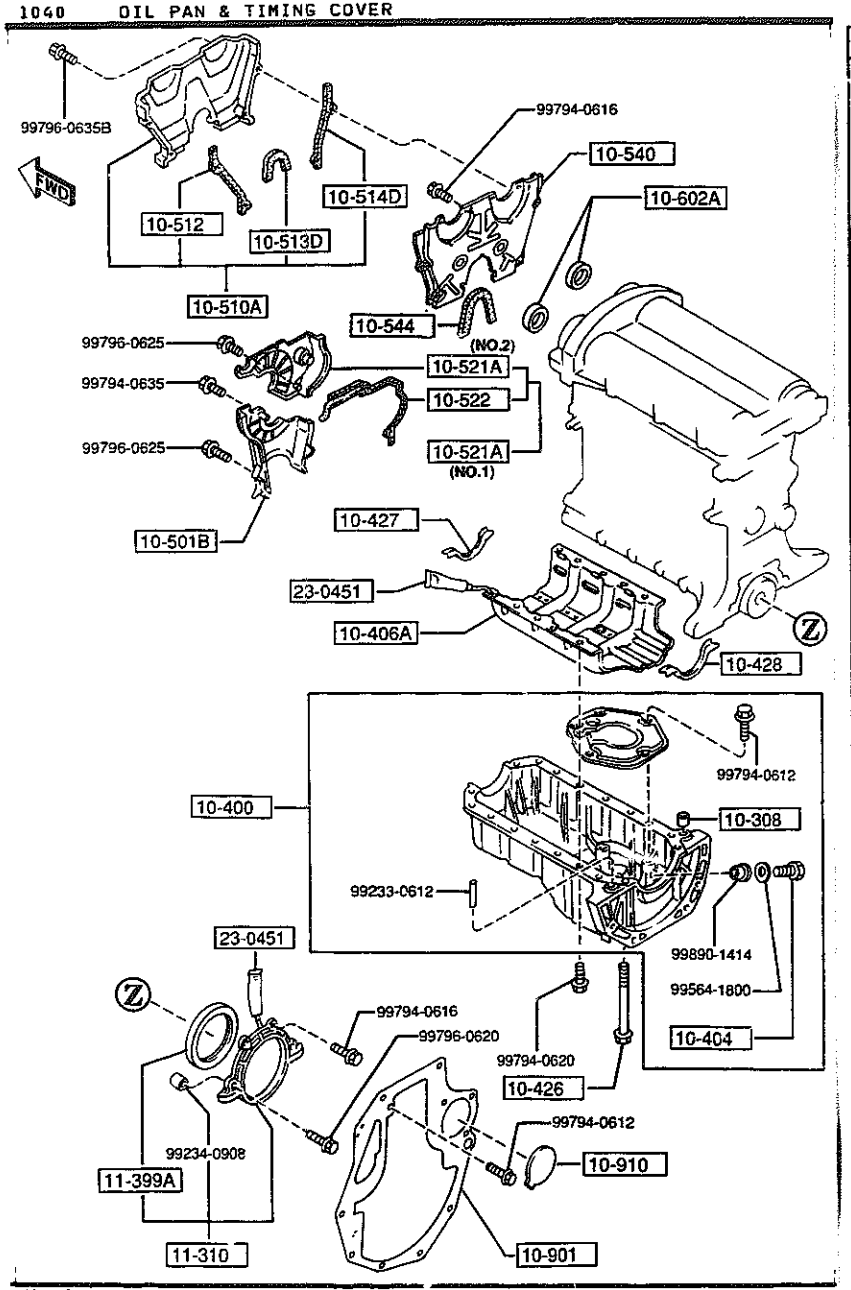

AUNA04

PART NO.	QTY	MODEL/RESTRICTION	MODEL/RESTRICTION	MODEL/RESTRICTION	FROM-TO
10-308		PIN,TUBULAR			
B6F4-10-308	1				
10-400		PAN,OIL			
BPE8-10-400A	1				
10-404		PLUG,DRAIN			
B6S7-10-404A	1				
10-406A		PLATE,OIL BAFFLE-CYL. BLK			
BPE8-10-40Y	1				
10-465		BOLT			
B6S7-10-465	2				
10-427		GASKET,OIL PAN			
B6F4-10-427	1				
10-428		GASKET,OIL PAN			
B6F4-10-428	1				
10-501B		COVER,TIMING BELT-LWR			
B660-10-501E	1				
10-510A		COVER(UP.),TIMING CHAIN			
B61P-10-510	1				
10-512		GASKET(L)			
B61P-10-512	1	NON ASBESTOS			
10-513D		GASKET(INN),TIMING BELT(L)			
B61P-10-513	1	NON ASBESTOS			
10-514D		GASKET(C),TIMING BELT(L)			
B61P-10-514	1	NON ASBESTOS			
10-521A		COVER,TIMING BELT-C.			
B660-10-520B	1	(ILLUST. NO.1)			
*B660-10-521B	1	(ILLUST. NO.2)			

CAT. AUNA04-03

1995-04

1040 OIL PAN & TIMING COVER

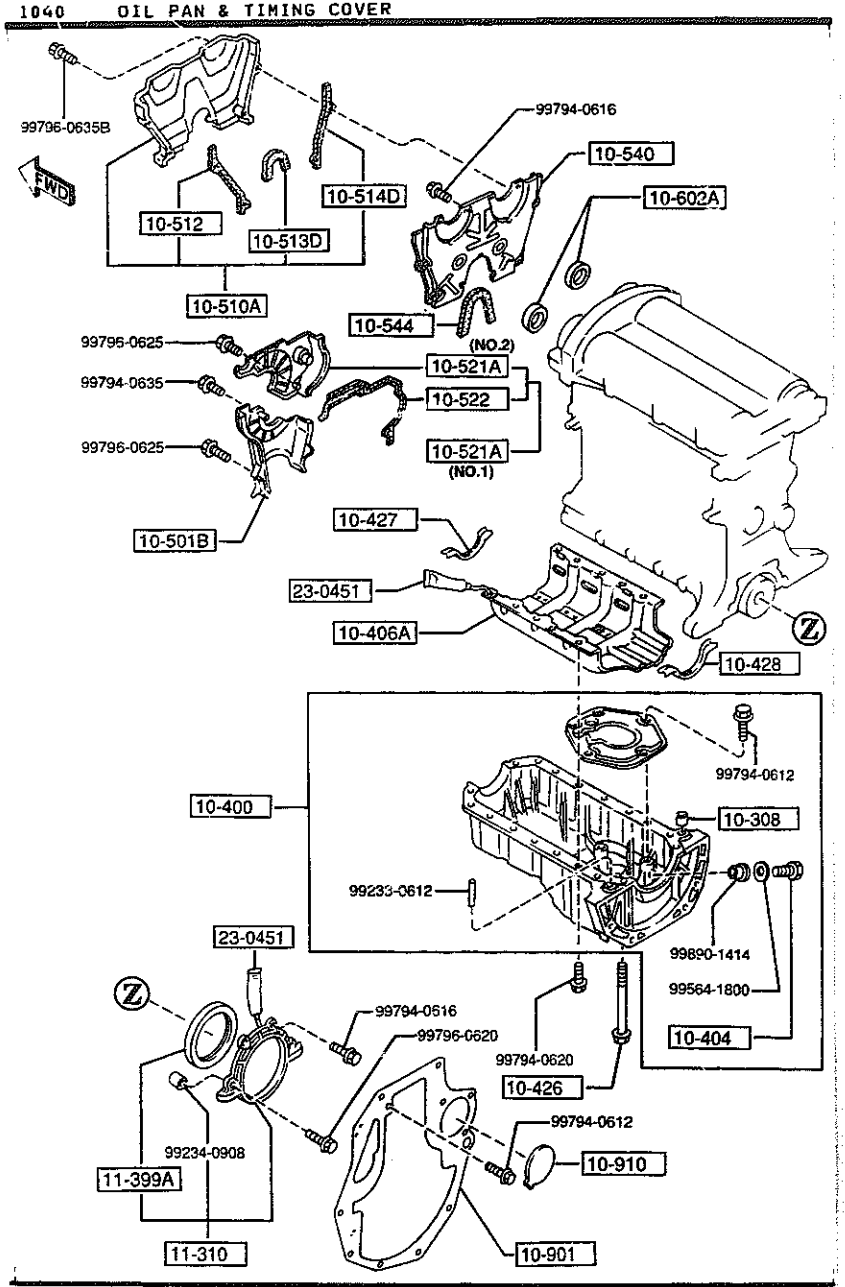

AUNA04

PART NO.	QTY	MODEL/RESTRICTION	MODEL/RESTRICTION	MODEL/RESTRICTION	FROM-TO
10-522		GASKET,T.BELT COVER-C,			
B660-10-522	1	NON ASBESTOS			
10-540		PLATE,SEAL-T.BELT COVER U			
B61P-10-540C	1				
10-544		RUBBER,SEAL-SEAL PLATE			
B61P-10-544	1				
10-602A		SEAL,OIL			
FS05-10-602A	2				
10-901		PLATE,END			
B61P-10-901A	1	(MT)			
B64J-10-901	1	(AT)			
10-910		COVER,END PLATE			
B64J-10-903	1	(AT)			
11-310		COVER,REAR			
B366-11-310C	1				
11-399A		SEAL,OIL-CRANKSHAFT			
BP05-11-312	1				
23-0451		TUBE,SILICON			
8527-77-739	1				

CAT. AUNA04-03

1995-04

1100 PISTON,CRANKSHAFT & FLYWHEEL

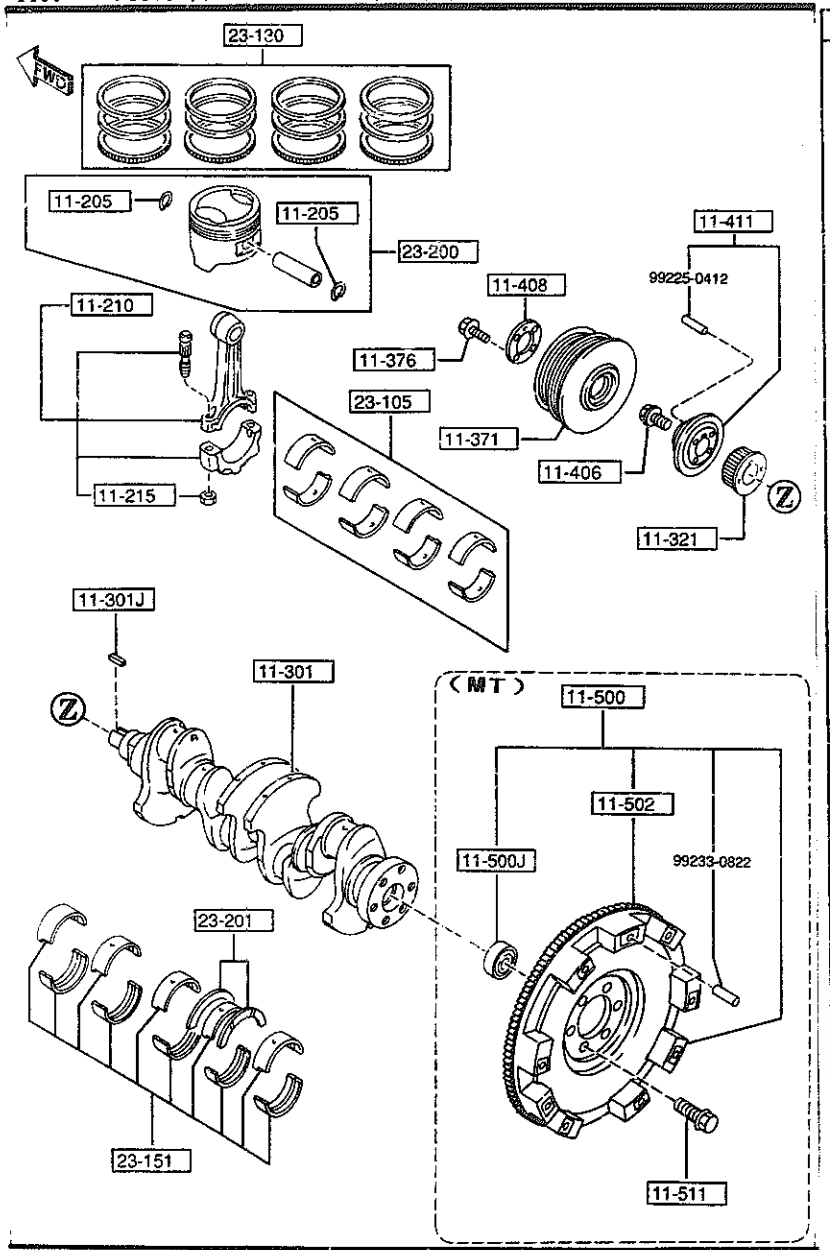

PART NO.	QTY	MODEL/RESTRICTION	MODEL/RESTRICTION	MODEL/RESTRICTION	FROM-TO
0221-11-205	8	CLIP			
B6S7-11-210E	4	ROD,CONNECTING			
B6S7-11-215A	8	NUT,CONNECTING ROD			
BP06-11-300C	1	CRANKSHAFT			
B3C7-11-317	1	KEY,WOODRUFF-PULLEY			
B3C7-11-321	1	PULLEY,TIMING BELT			
BPD3-11-401	1	PULLEY,CRANKSHAFT			
JF01-11-405	4	BOLT,PULLEY			
B3C7-11-406	1	BOLT,LOCK-C.SHAFT PULLEY			
B3C7-11-408	1	PLATE,CRANKSHAFT PULLEY			
B3C7-11-411	1	BOSS,PULLEY			
BPE8-11-500	1	WHEEL,FLY (MT)			
F801-11-303	1	BEARING,BALL-FLY WHEEL (MT)			
B367-11-502		GEAR,RING-FLY WHEEL YOSHIWA			

1100 PISTON,CRANKSHAFT & FLYWHEEL

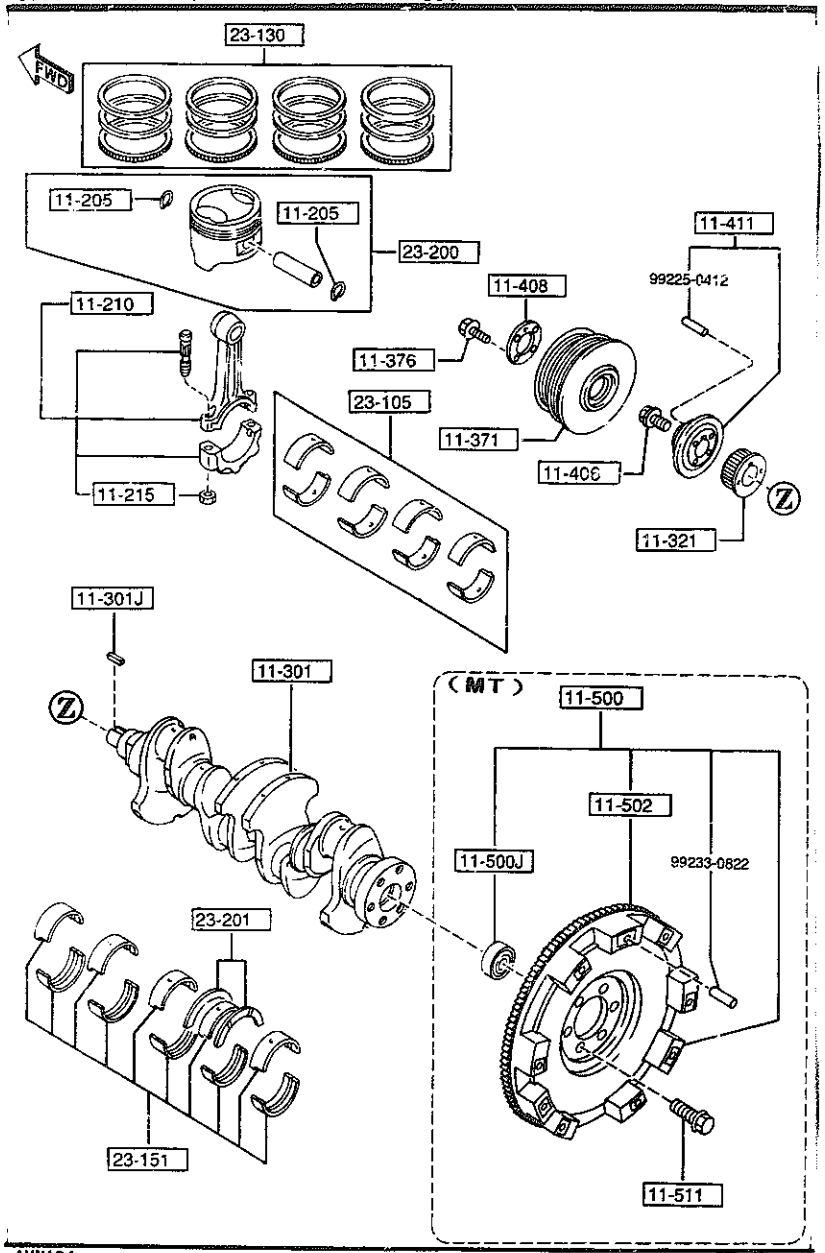

AUNA04

PART NO.	QTY	MODEL/RESTRICTION	MODEL/RESTRICTION	MODEL/RESTRICTION	PRCN-TO
CONT'D					
	1	(MT)			
+----------+					
| 11-511 |		BOLT,LOCK-FLYWHEEL			
+----------+					
F201-11-511A	6	(MT)			
+----------+					
| 23-105 |		METAL SET,CONN.ROD			
+----------+					
B6Y2-11-SE0	1	STD			
B6Y2-11-SFX	1	O.S. 0.50			
B6Y2-11-SFY	1	O.S. 0.75			
B6Y2-11-SF0	1	O.S. 0.25			
+----------+					
| 23-130 |		RING SET,PISTON			
+----------+					
BPY1-11-SC0	1	STD.			
BPY1-11-SDX	1	O.S. 0.50			
BPY1-11-SD0	1	O.S. 0.25			
+----------+					
| 23-151 |		METAL SET,MAIN BRG.			
+----------+					
B6Y2-11-SG0	1	STD.			
B6Y1-11-SHX	1	O.S. 0.50			
B6Y1-11-SHY	1	O.S. 0.75			
B6Y1-11-SH0	1	O.S. 0.25			
+----------+					
| 23-200 |		PISTON SET			
+----------+					
BPY1-11-SA0 AN(BPY1-11-SA0A)	4	STD.			-3B01
BPY1-11-SBX AN(BPY1-11-SBXA)	4	O.S. 0.50			-3B01
BPY1-11-SB0 AN(BPY1-11-SB0A)	4	O.S. 0.25			-3B01
BPY1-11-SA0A	4	STD.			3B01-
BPY1-11-SBXA	4	O.S. 0.50			3B01-
BPY1-11-SB0A		O.S. 0.25			

3B01 NA3***-505807

CAT. AUNA04-03

1995-04

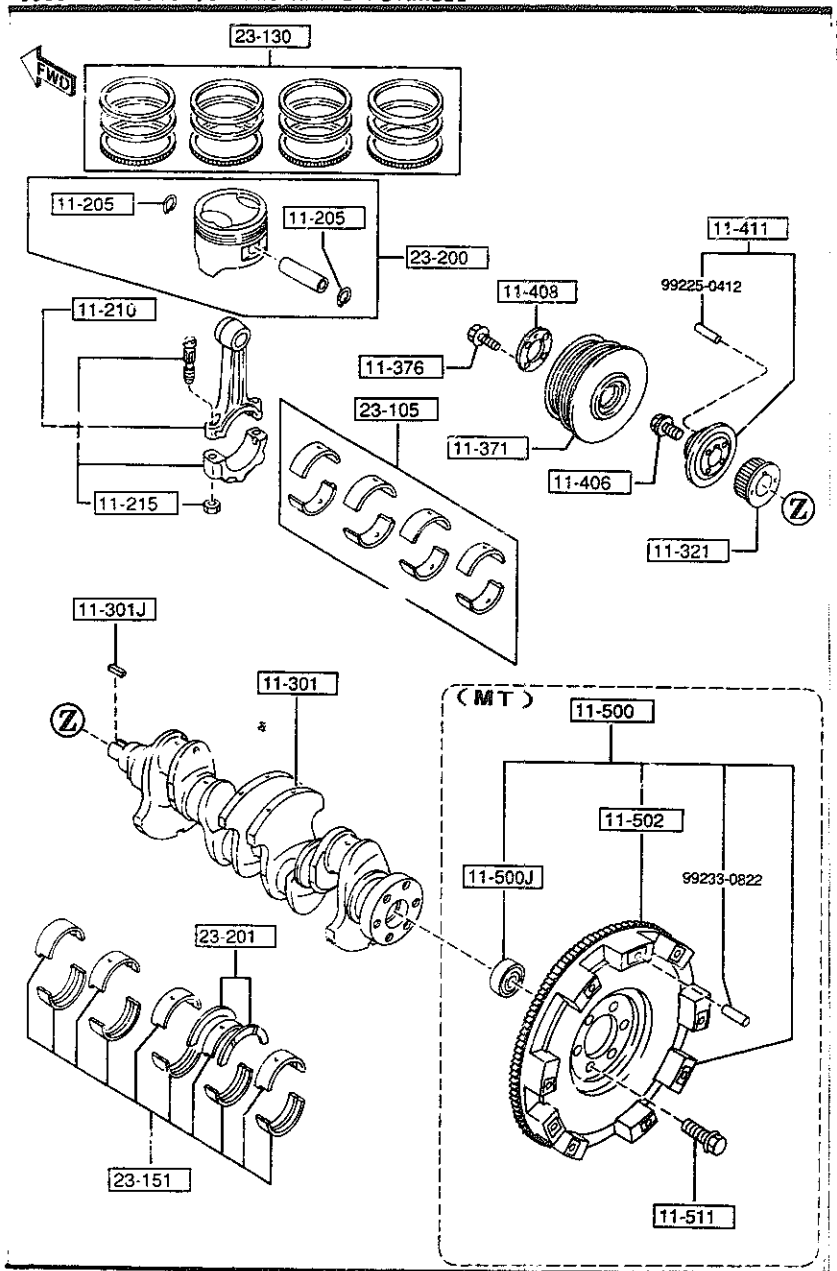

AUNA04

PART NO.	QTY	MODEL/RESTRICTION	MODEL/RESTRICTION	MODEL/RESTRICTION	PRIOR TO
CONT'D					
	4				3B01-
23-201		METAL SET,THRUST			
B6Y1-11-SJ0	1	STD.			
B6Y1-11-SKX	1	O.S. 0.50			
B6Y1-11-SKY	1	O.S. 0.75			
B6Y1-11-SK0	1	O.S. 0.25			

3B01 NA3***-505807

CAT. AUNA04-03

1995-04

1200 VALVE SYSTEM

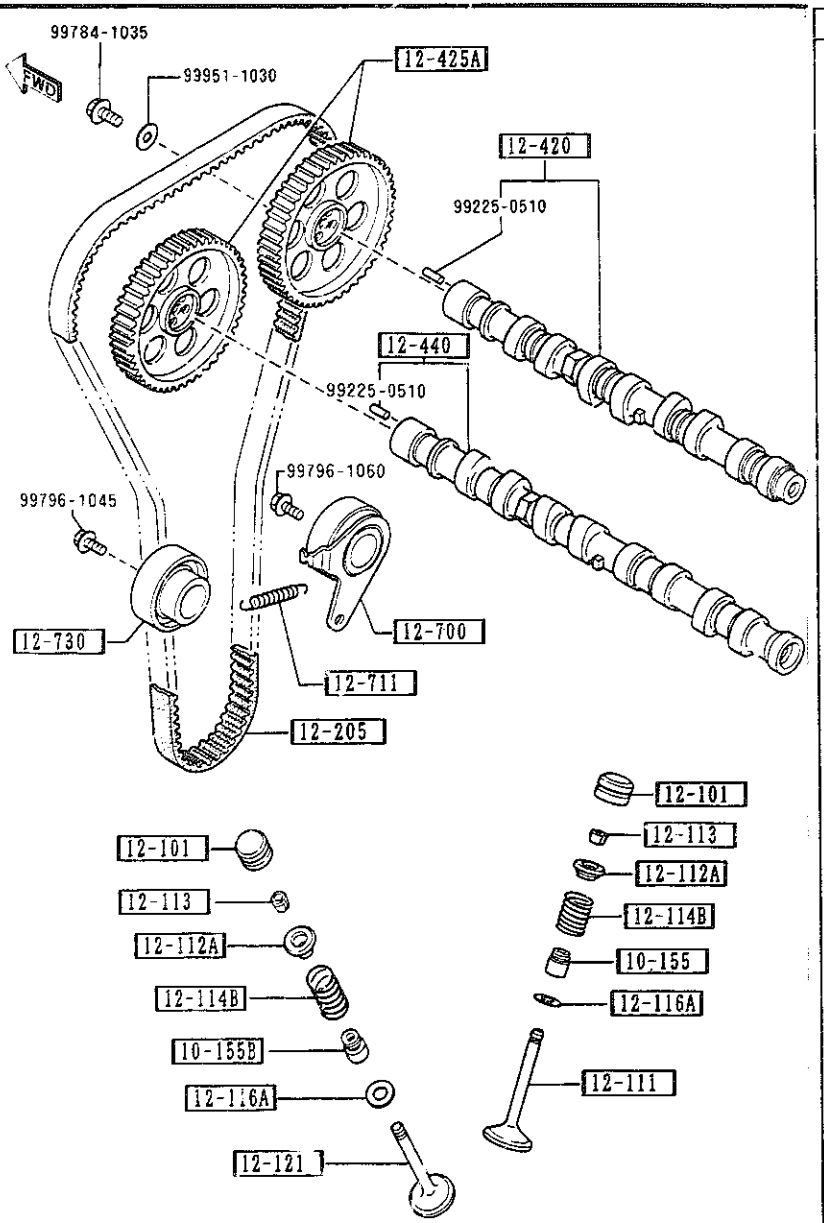

PART NO.	QTY	MODEL/DESTINATION	MODEL/DESTINATION	MODEL/DESTINATION
10-155		SEAL,VALVE		
KL01-10-155	8	NOK		
10-155B		SEAL,VALVE		
KL02-10-155	8	NGK		
12-101		ADJUSTER,HYDRAULIC L ASH		
KL01-12-101B	16	NITTAN VALVE		
12-111		VALVE,INLET		
BP05-12-111	8	NITTAN VALVE		
BP06-12-111	8	FUJI VALVE		
12-112A		SEAT,VALVE SPG-UP.		
BP05-12-113	16			
12-113		COTTER,VALVE-IN.		
FE3N-12-114	32			
12-114B		SPRING,VALVE		
BP05-12-125	16			
12-116A		SEAT,VALVE SPG.-LWR		
B660-12-123A	16			
12-121		VALVE,EXHAUST		
BP05-12-121A	8			
12-205		BELT,TIMING		
B6S7-12-205C	1	UNITTA		
12-420		CAMSHAFT		
BP05-12-420D A (BP05-12-420E)	1			-4701
*BP05-12-420E	1			4701-
12-425A		PULLEY,CAMSHAFT		

4701 NA3***-521312

1200 VALVE SYSTEM

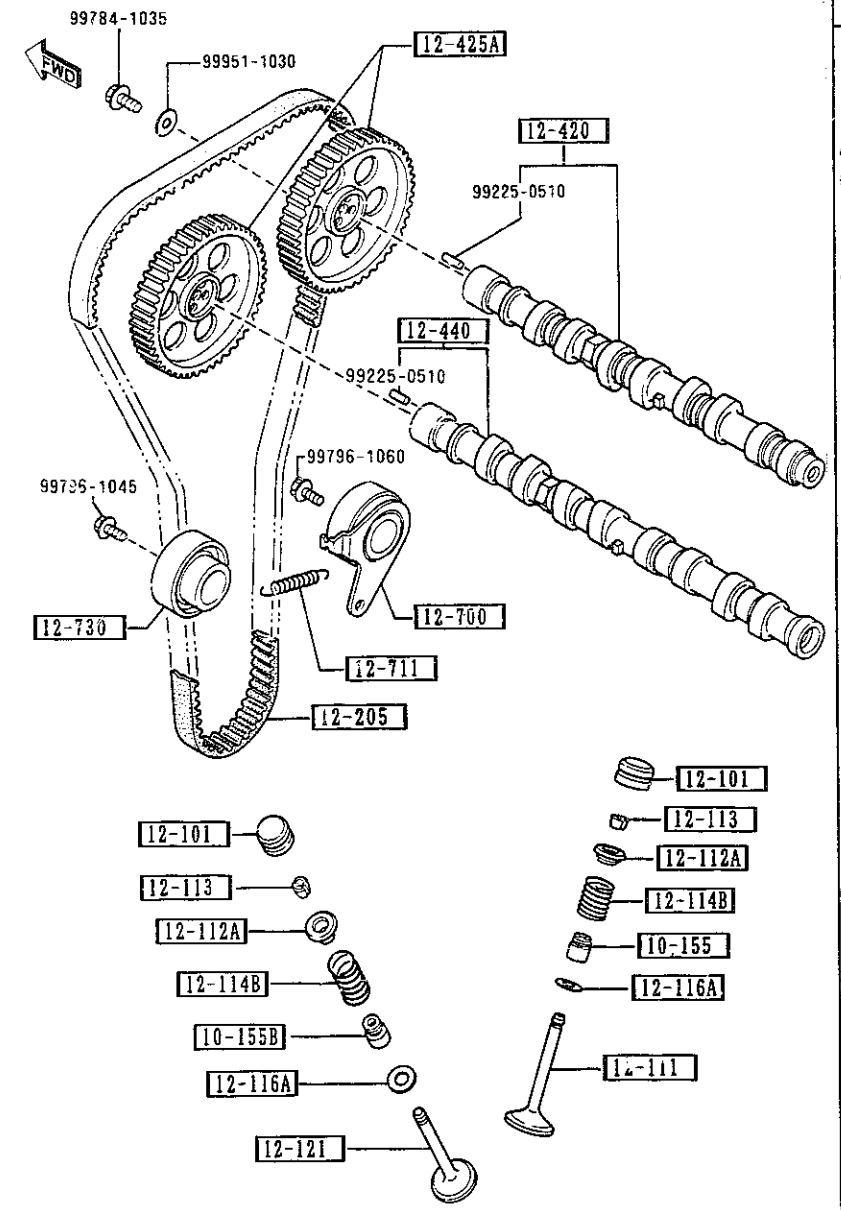

PART NO.	QTY	MODEL/RESTRICTION	MODEL/RESTRICTION	MODEL/RESTRICTION	[illegible]
CONT'D					
B6S7-12-425A	2				
+---------+					
| 12-440 |		CAMSHAFT,EXHAUST			
+---------+					
BP06-12-440B	1				-4701
A (BP06-12-440C)					
*BP06-12-440C	1				4701-
+---------+					
| 12-700 |		TENSIONER,T.BELT			
+---------+					
B660-12-700D	1				-3B26
AN(B660-12-700E)					
B660-12-700E	1				3B26-
+---------+					
| 12-711 |		SPRING,TENSIONER			
+---------+					
B660-12-711C	1				
+---------+					
| 12-730 |		IDLER,TIMING BELT			
+---------+					
B660-12-730C	1				

3B26 NA3***-507477
4701 NA3***-521312

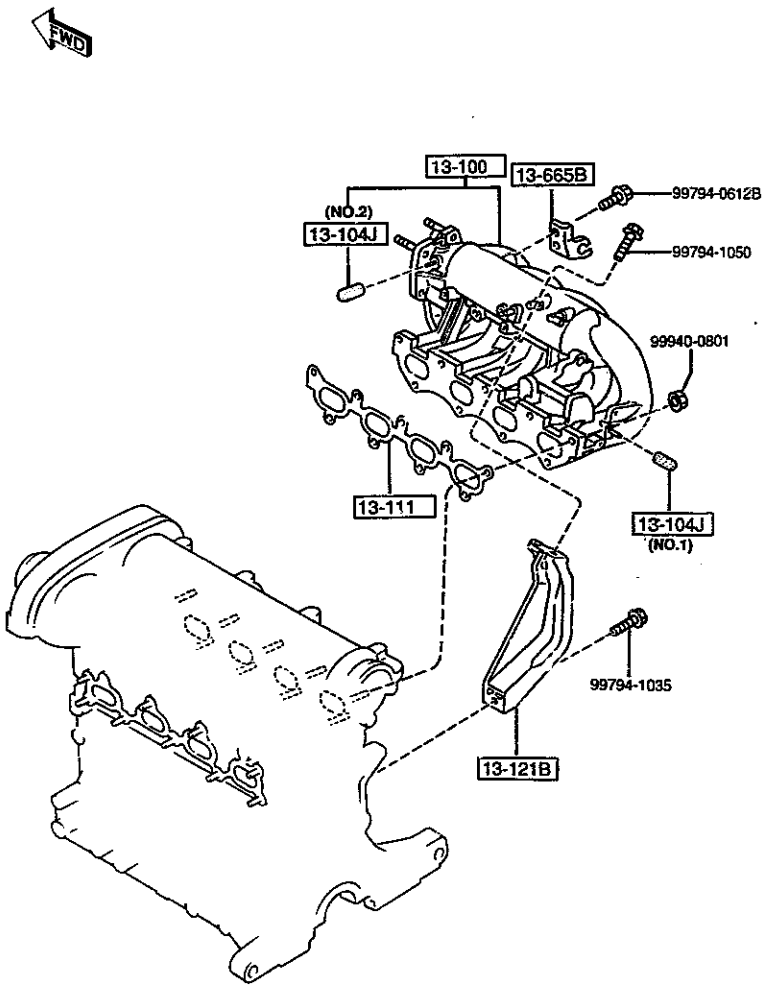

AUNA04

1300 -1 * INLET MANIFOLD

PART NO.	QTY	MODEL/RESTRICTION	MODEL/RESTRICTION	MODEL/RESTRICTION	FROM-TO
13-100		MANIFOLD,INLET			
BPE8-13-100C	1				
13-104J		CAP,BLIND			
F8L7-13-104	1	(ILLUST. NO.1) (MT)			
IG10-13-104	1	(ILLUST. NO.2)			
13-111		GASKET,IN.MANIFOLD			
BP05-13-111	1	NON ASBESTOS			
13-121B		STAY,MANIFOLD			
BPE8-13-121	1				
13-665B		BRACKET,ACCEL WIRE			
B61P-13-665	1				

CAT. AUNA04-03

1995-04

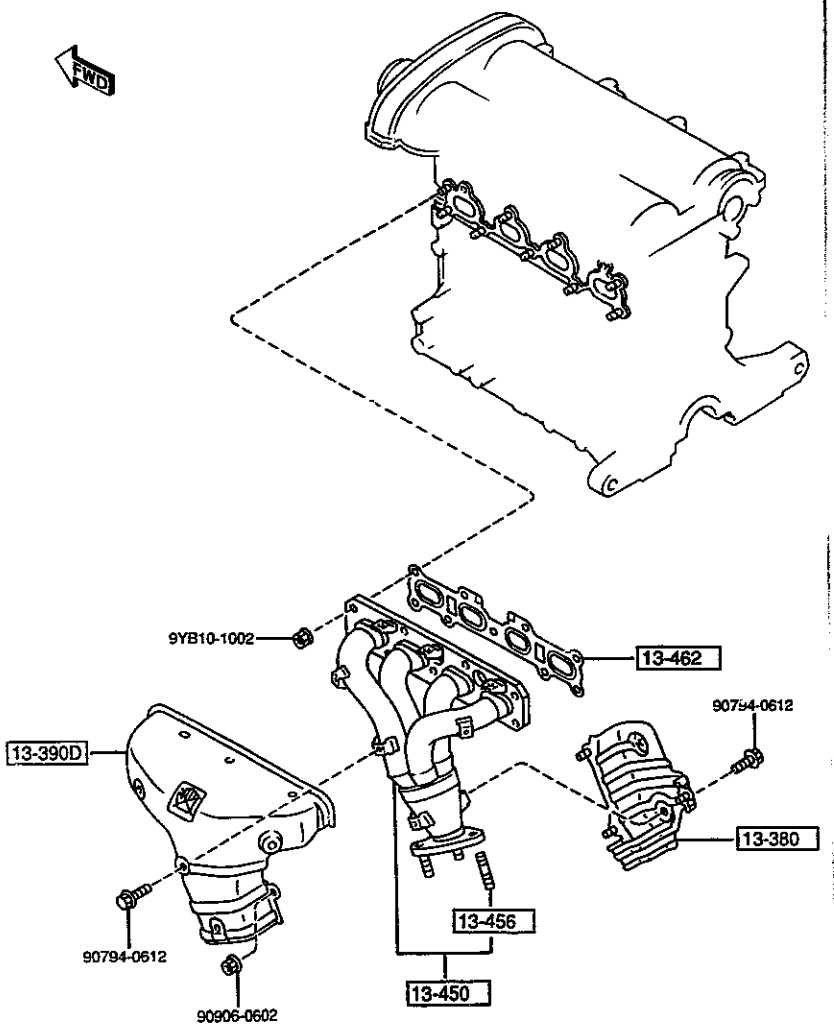

1310 -1 * EXHAUST MANIFOLD

PART NO.	QTY	MODEL/RESTRICTION	MODEL/RESTRICTION	MODEL/RESTRICTION	FROM-TO
13-380		INSULATOR,HEAT			
BPE8-13-380A	1				
13-390D		INSULATOR,EX.MANIFOLD			
BPE8-13-390	1				
13-450		MANIFOLD,EXHAUST			
BPE8-13-450	1				
13-456		STUD			
2306-13-456	3				
13-462		GASKET,EX.MANIFOLD			
BP05-13-460	1	NON ASBESTOS			

1320 FUEL SYSTEM

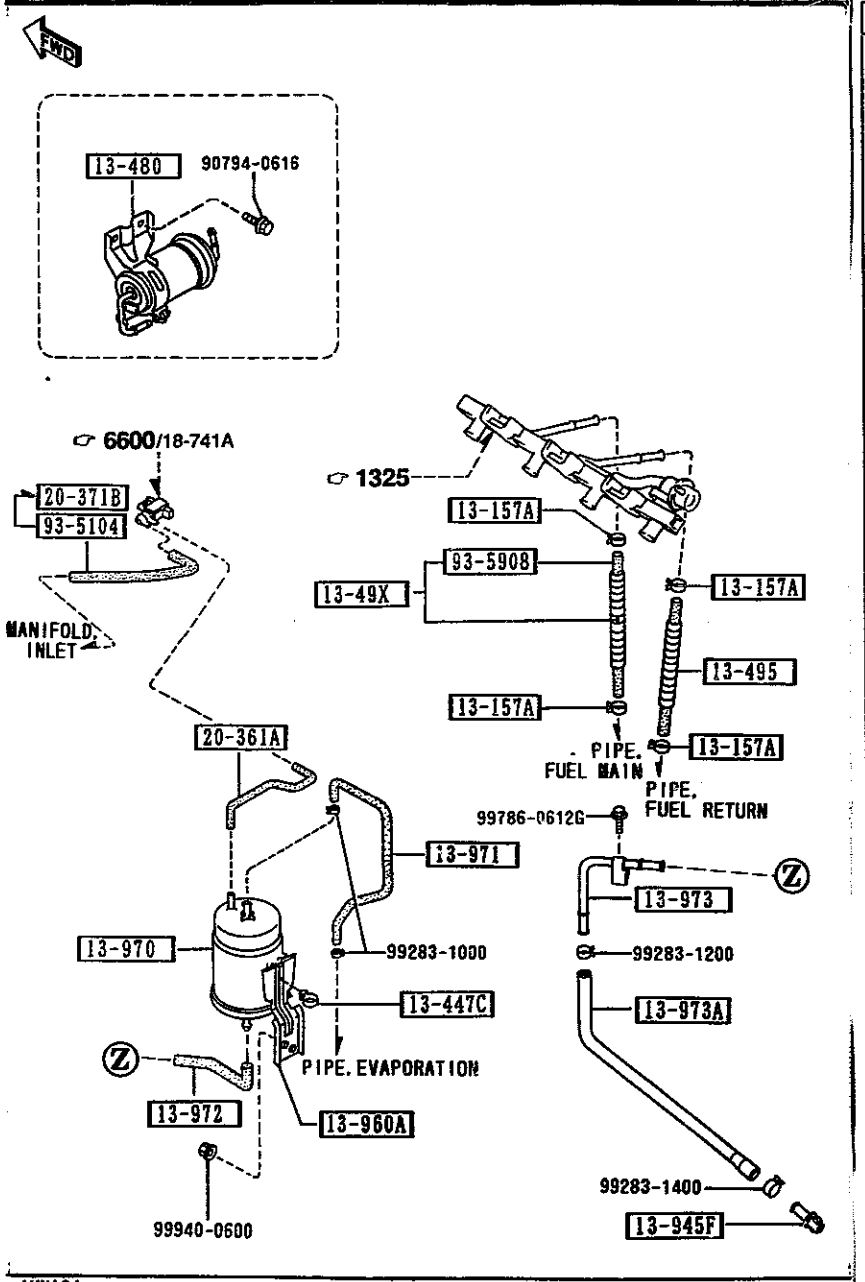

AUNA04

PART NO.	QTY	MODEL/RESTRICTION	MODEL/RESTRICTION	MODEL/RESTRICTION	FROM-TO
13-157A 8574-13-157	4	CLIP			
13-447C B61P-13-447	1	CLAMP,HOSE			
13-480 B61P-20-490	1	FILTER,FUEL			
13-49X BPE8-13-49X	1	HOSE,FUEL-EGI			
13-495 BPE8-13-495	1	HOSE,FUEL			
13-945F JE16-13-29B	1	CONNECTOR			
13-960A B61P-13-960	1	BRACKET,CANISTER			
13-970 JE16-13-970A	1	CANISTER			
13-971 B6CA-13-971	1	HOSE,VENTILATION			
13-972 B6CA-13-972	1	HOSE,EVAPORATION			
13-973 B61P-13-97YA	1	HOSE,DRAIN			
13-973A B61P-13-973A	1	HOSE,EVAPORATION			
20-361A B61P-20-361	1	TUBE,VACUUM			
20-371B BPE8-20-371	1	TUBE,VACUUM			3A01-

3A01 NA3×××-505179

CAT. AUNA04-03 1995-04

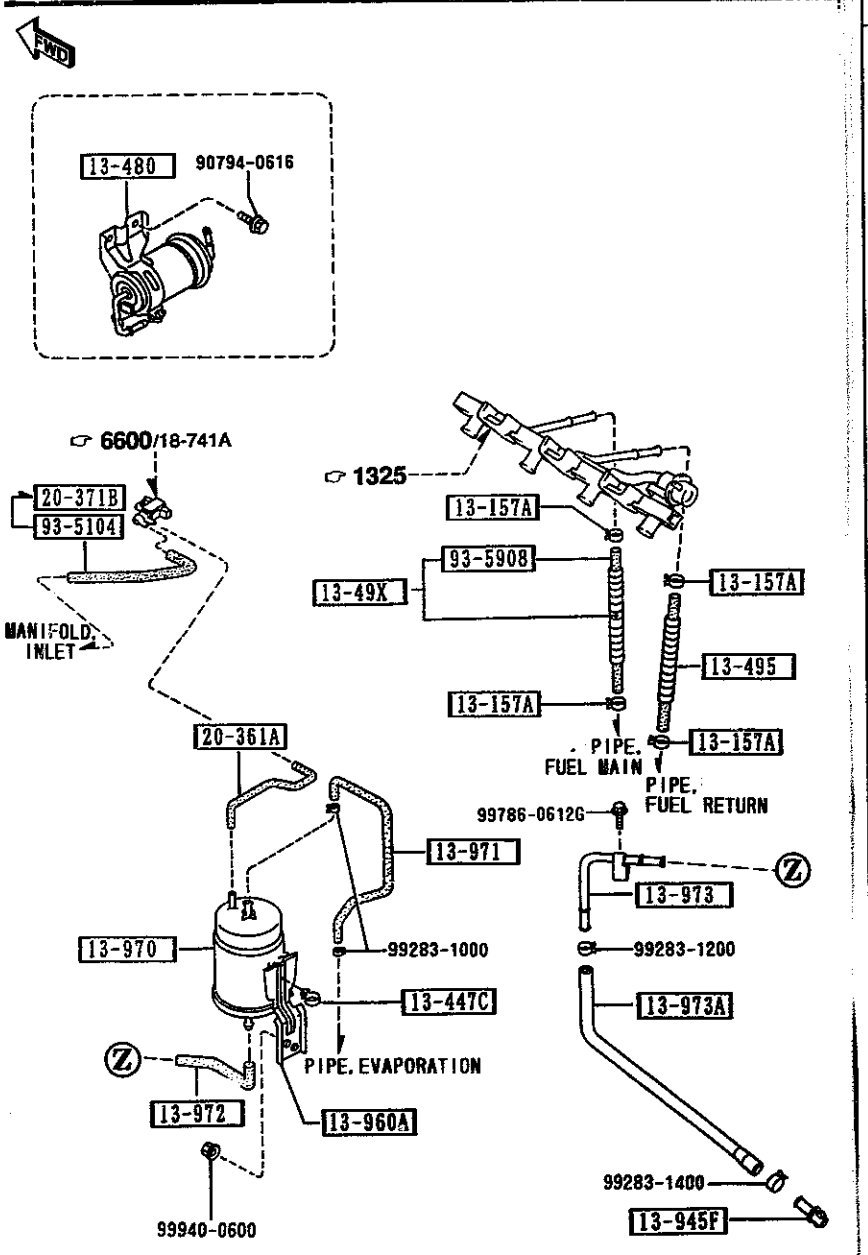

PART NO.	QTY	MODEL/RESTRICTION	MODEL/RESTRICTION	MODEL/RESTRICTION	FROM-TO
93-5104		HOSE			
99351-04999	1				-3A01
93-5908		HOSE			
99359-0834	1				

3A01 NA3***-505179

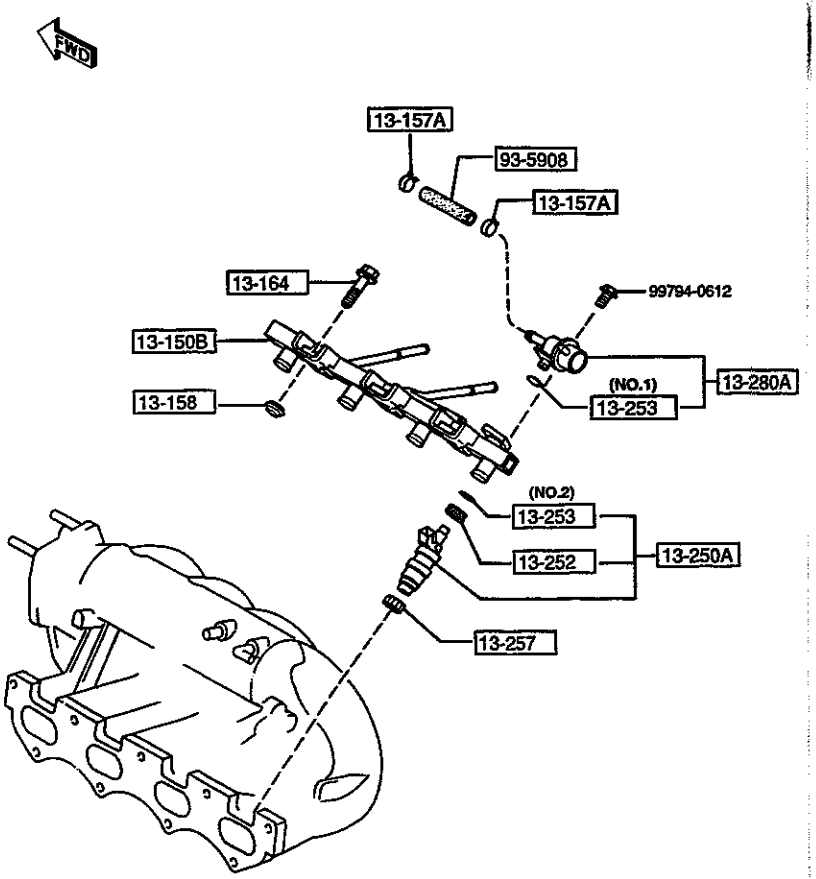

AUNA04

1325 -1 * FUEL DISTRIBUTOR

PART NO.	QTY	MODEL/RESTRICTION	MODEL/RESTRICTION	MODEL/RESTRICTION	FROM-TO
13-150B		DISTRIBUTOR,FUEL			
BPE8-13-150	1				
13-157A		CLIP			
8574-13-157	2				
13-158		INSULATOR,FUEL DIST.			
B675-13-158	3				
13-164		BOLT,FUEL DISTRIBUTOR			
F8B3-13-164	3				
13-250A		INJECTION,FUEL-M.P.ELECT.			
BP06-13-250	4				
13-252		GROMMET			
8574-13-252	4				
13-253		RING,'O'			
G601-13-253	1	(ILLUST. NO.1)			
8574-13-253	4	(ILLUST. NO.2)			
13-257		INSULATOR,INJECTION			
JE06-13-257	4				
13-280A		PRESSURE RG.,FUEL			
KJ01-13-280	1				
93-5908		HOSE			
99359-0809	1				

CAT. AUNA04-03 1995-04

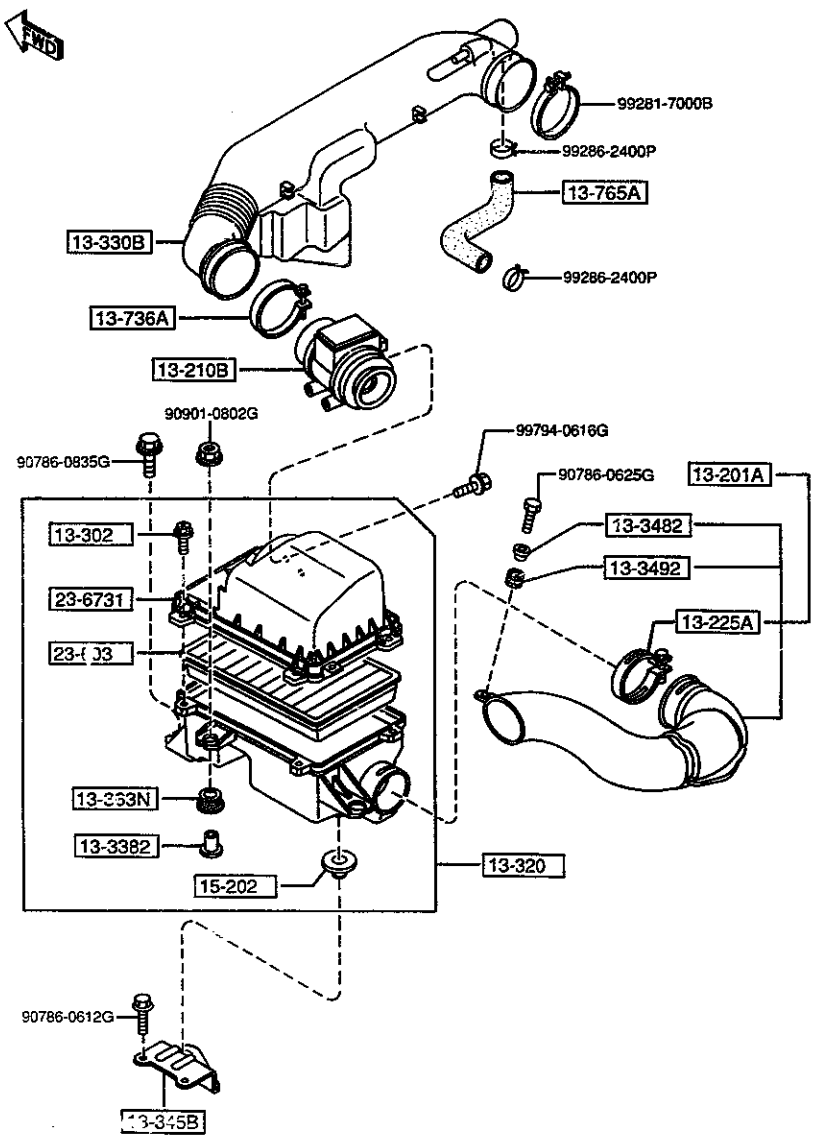

PART NO.	QTY	MODEL/RESTRICTION	MODEL/RESTRICTION	MODEL/RESTRICTION	FROM-TO
13-201A BPE8-13-200	1	DUCT,FRESH AIR			
13-210B B6BF-13-215	1	SENSOR,AIR FLOW			
13-225A B61P-13-735	1	CLAMP,HOSE			
13-302 F201-13-302A	4	BOLT,AIR CLEANER			
13-320 BPE8-13-320	1	HOUSING,AIR CLEANER			
13-330B BPE8-13-331A	1	PIPE,AIR INTAKE			
13-3382 FE51-13-329	3	SPACER			
13-345B B61P-20-211	1	BRACKET,AIR CLEANER			
13-3482 SLA1-13-321	1	SPACER,AIR INT.PIPE			
13-3492 S501-13-349	1	INSULATOR			
13-363N FE51-13-363	3	RUBBER,MOUNTING			
13-736A KL01-13-735	1	CLAMP,HOSE-A.I.P./A. CLNR			
13-765A BPE8-13-765A	1	HOSE,AIR			
15-202 B61P-13-Z66	1	RUBBER,MOUNT			

1330 AIR CLEANER

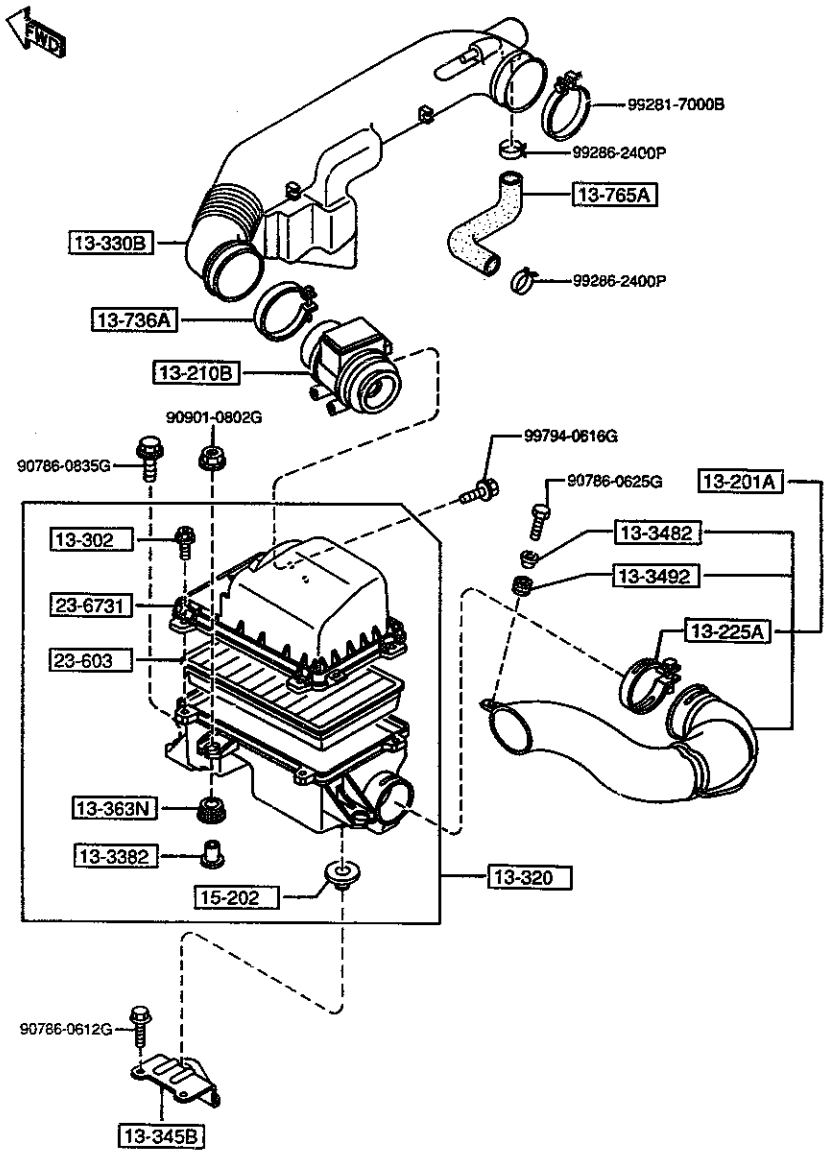

PART NO.	QTY	MODEL/RESTRICTION	MODEL/RESTRICTION	MODEL/RESTRICTION	FROM-TO
23-603		ELEMENT,AIR CLEANER			
B6S7-13-Z40	1				
23-6731		COVER,AIR CLEANER			
BPE8-13-Z01	1				

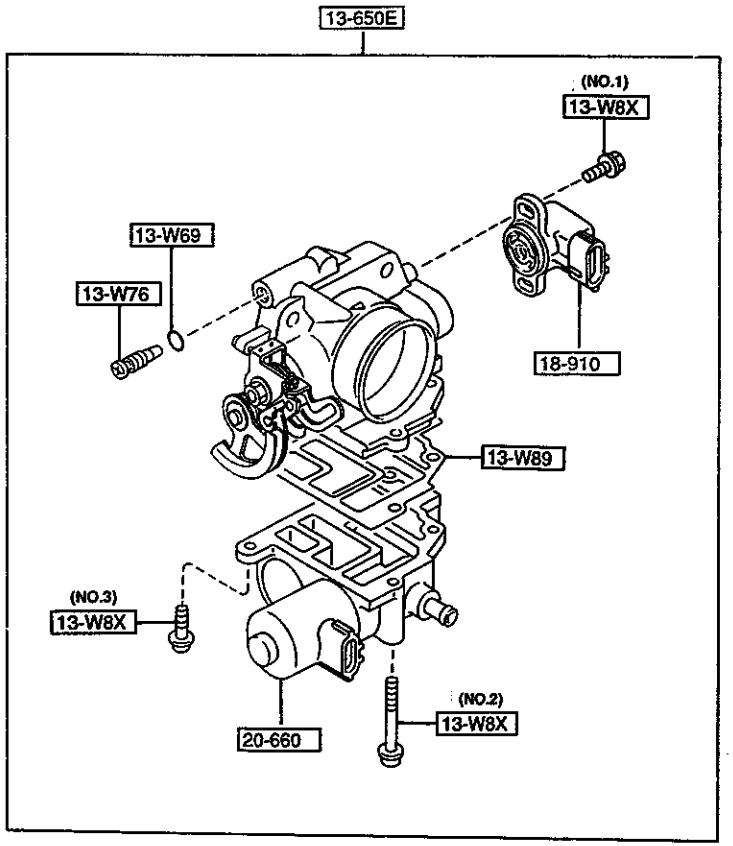

AUNA04

1364 -1 * THROTTLE BODY

PART NO.	QTY	MODEL/RESTRICTION	MODEL/RESTRICTION	MODEL/RESTRICTION	FROM-TO
13-W69		RING,'O'			
K801-13-W69	1				
13-W76		SCREW,ID.ADJUST-TH. BODY			
K801-13-W76	1				
13-W8X		SCREW & WASHER SET			
B551-13-W8X	2	(ILLUST. NO.1)			
B6BF-13-W8X	2	(ILLUST. NO.2)			
K802-13-W8X	2	(ILLUST. NO.3)			
13-W89		GASKET,THERMO			
B6BF-13-W89	1				
13-650E		BODY,THROTTLE			
BPE8-13-640A	1				
18-910		SENSOR,THROTTLE-CARB			
JE50-18-911	1				
20-660		VALVE,IDLE AIR CONTROL			
B6BF-20-660	1				

CAT. AUNA04-03

1995-04

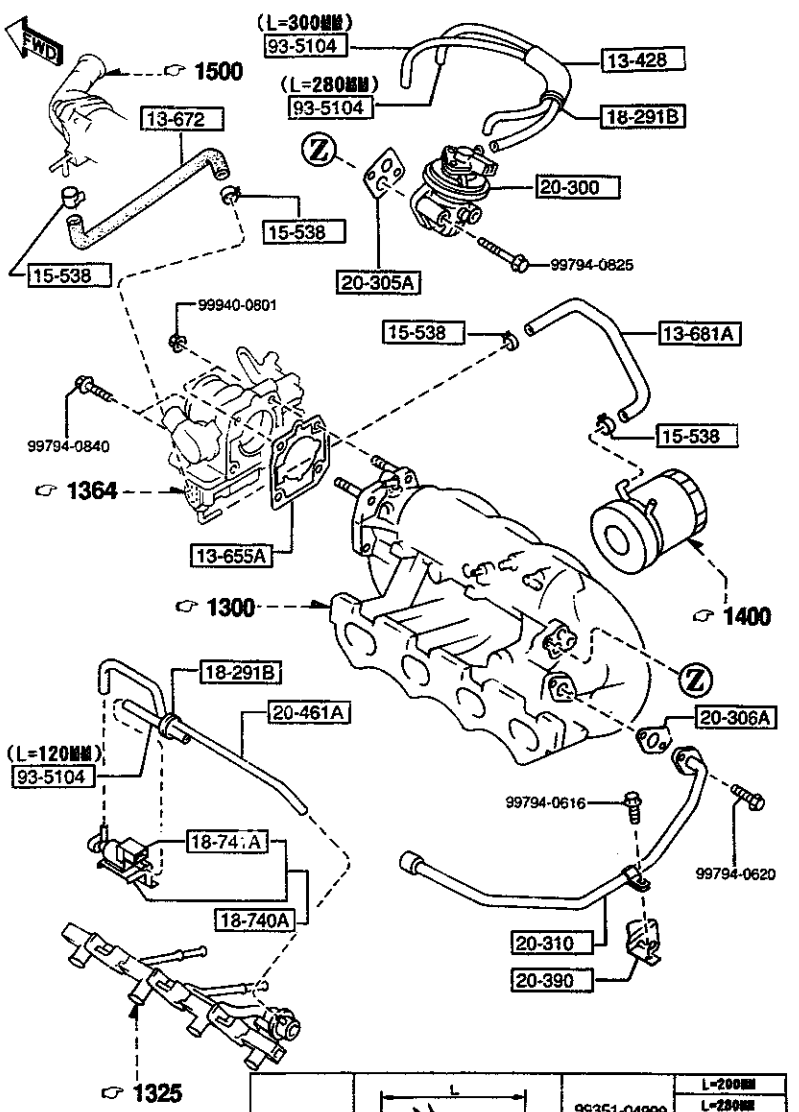

PART NO.	QTY	MODEL/RESTRICTION	MODEL/RESTRICTION	MODEL/RESTRICTION	FROM-TO
13-428 B367-13-428	1	PROTECTOR			
13-655A B6BF-13-655	1	GASKET			
13-672 BPE8-13-682	1	HOSE,WATER			
13-681A BPE8-13-681	1	HOSE,WATER			
15-538 JF02-15-538	4	CLAMP,WATER HOSE			
18-291B HE21-18-291	2	CLAMP,HOSE			
18-740A B69N-18-740	1	VALVE,SOLENOID			
18-741A FS05-18-741	1	VALVE,THREE WAY			
20-300 Z505-20-300	1	VALVE,E.G.R.			
20-305A JE27-20-305	1	GASKET,E.G.R. VALVE			
20-306A JE06-20-306	1	GASKET			
20-310 BPE8-20-310	1	PIPE,E.G.R.			
20-390 BPE8-20-390	1	BRACKET,E.G.R.PIPE			
20-461A BPE8-20-461	1	TUBE,VACUUM			

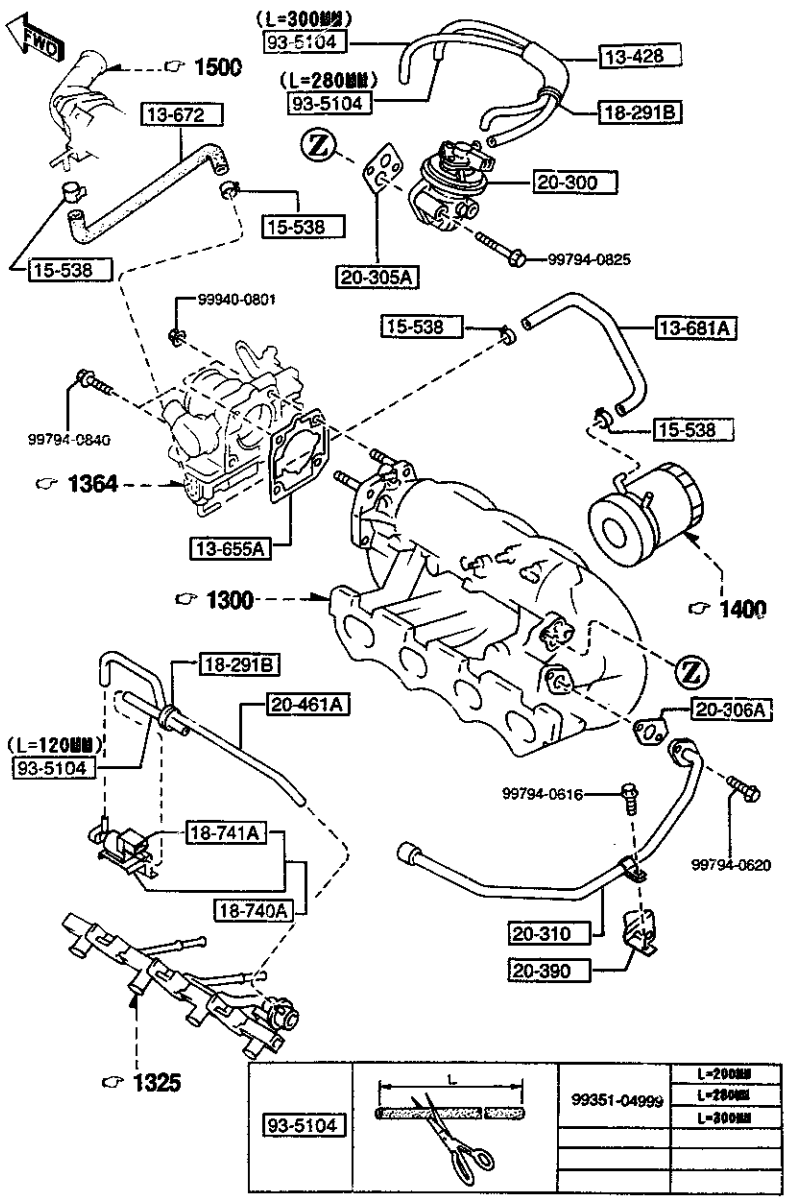

AUNA04

PART NO.	QTY	MODEL/RESTRICTION	MODEL/RESTRICTION	MODEL/RESTRICTION	FROM-TO
93-5104		HOSE			
99351-04999	1				

CAT. AUNA04-03

1995-04

1400 OIL PUMP & FILTER

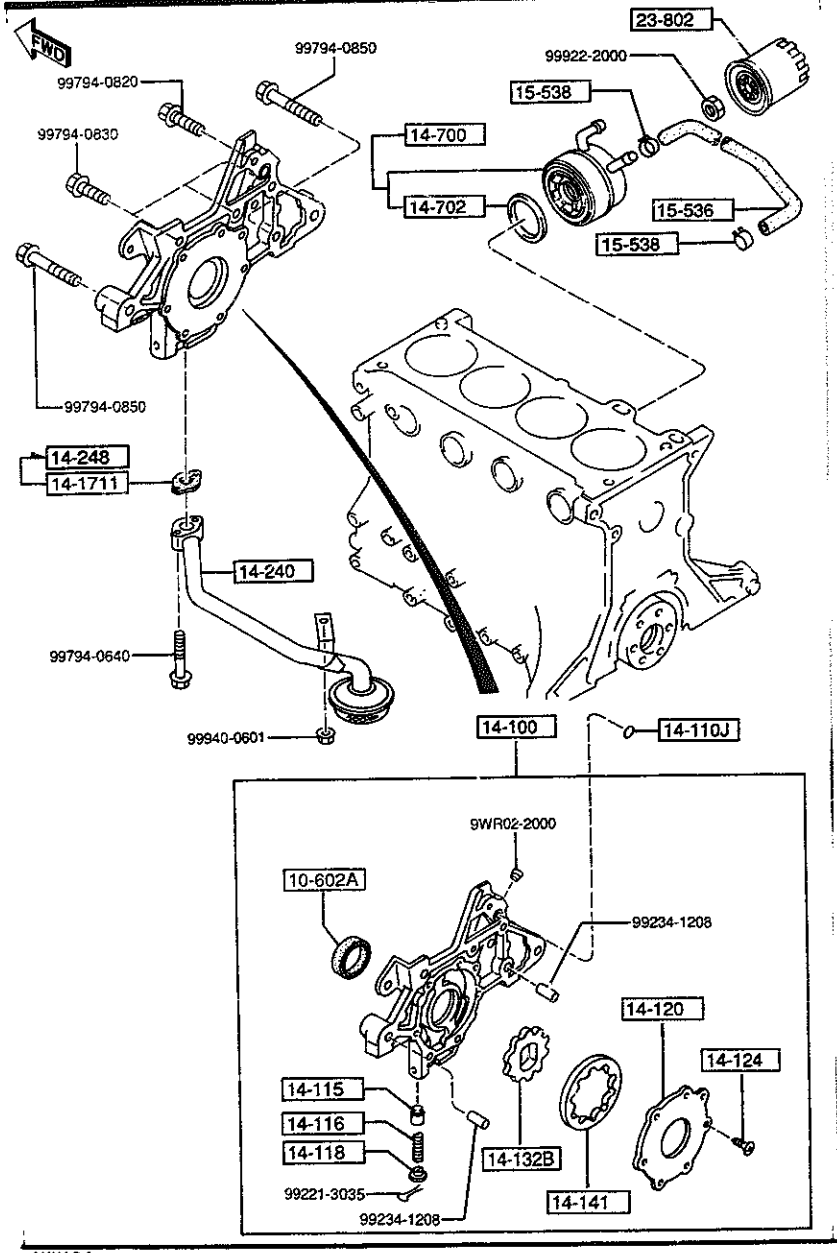

AUNA04

PART NO.	QTY	MODEL/RESTRICTION	MODEL/RESTRICTION	MODEL/RESTRICTION	FROM-TO
10-602A		SEAL,OIL			
B3C7-10-602A	1	NON ASBESTOS			
14-100		PUMP,OIL			
B6BF-14-100A	1				-3901
AN(B6S8-14-100E)					
B6S8-14-100E	1				3901-4310
A (B6S8-14-100F)					
B6S8-14-100F	1				4310-
14-110J		RING,'O'			
FE1H-14-122A	1				
14-115		PLUNGER,CONTROL			
0221-14-115	1				-4301
JF01-14-115	1				4301-
14-116		SPRING,PRESSURE			
0324-14-116B	1				
14-118		SHEET,SPRING			
0222-14-118	1				
14-120		COVER,OIL PUMP			
B6BF-14-121	1				
14-124		SCREW,OIL PUMP COVER			
FE1H-14-124	7				
14-132B		GEAR,INNER			
B6S7-14-132	1				
14-141		GEAR,OUTER			
B6S7-14-141	1				
14-1711		GASKET,OIL STRAINER			
B621-14-248	1	NON ASBESTOS			-3901
14-240		STRAINER,OIL			
BPE8-14-240	1				

3901 NA3***-502360
4301 NA3***-514672
4310 NA3***-515568

CAT. AUNA04-03 1995-04

1400 OIL PUMP & FILTER

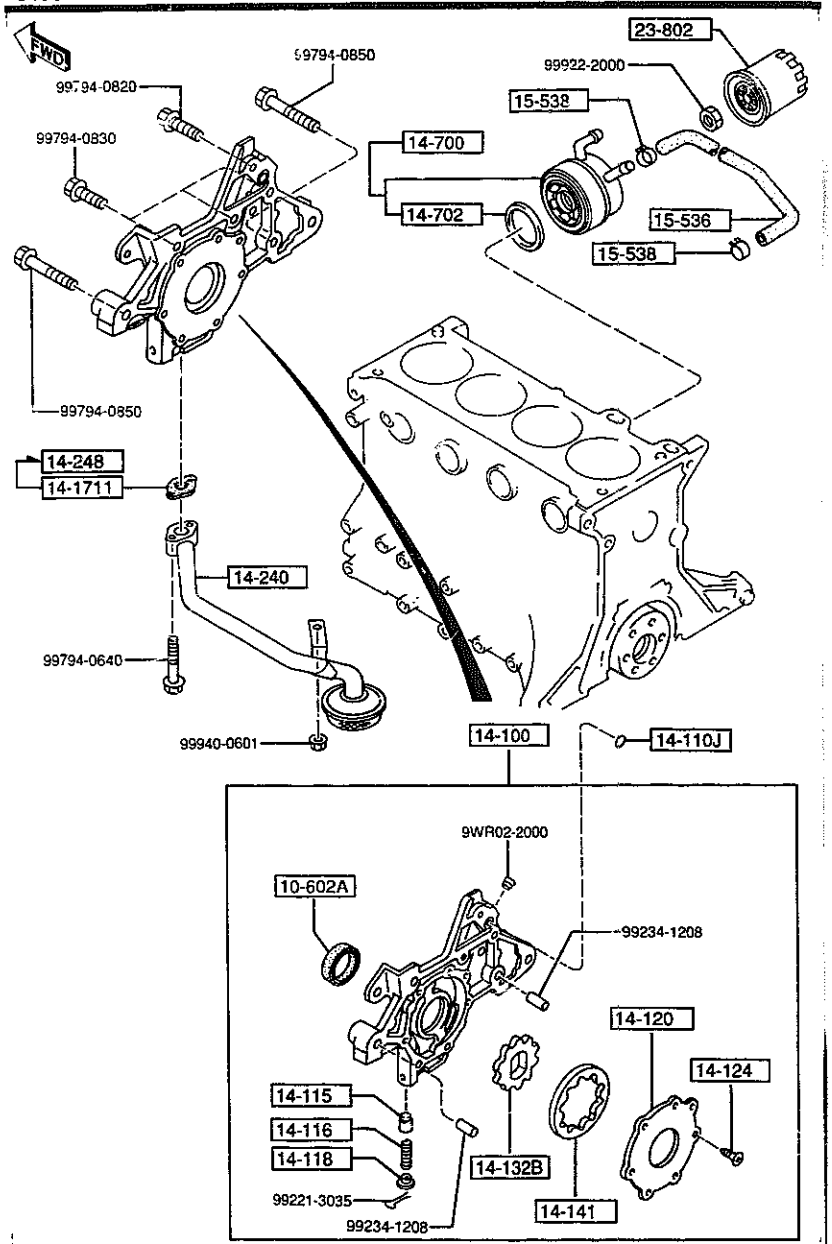

AUNA04

PART NO.	QTY	MODEL/RESTRICTION	MODEL/RESTRICTION	MODEL/RESTRICTION	PROV-TO
14-248		GASKET,OIL STRAINER			
B6BF-14-248	1				3901-
14-700		COOLER,OIL			
BPE8-14-700	1				
14-702		GASKET			
KL01-14-702A	1				
15-536		HOSE,WATER-OIL COOLER IN.			
BPE8-15-536	1				
15-538		CLAMP,WATER HOSE			
JF02-15-538	2				
23-802		CARTRIDGE,OIL FILTER			
B6Y1-14-302	1	TOKYO ROKI			

3901 NA3***-502360

CAT. AUNA04-03 1995-04

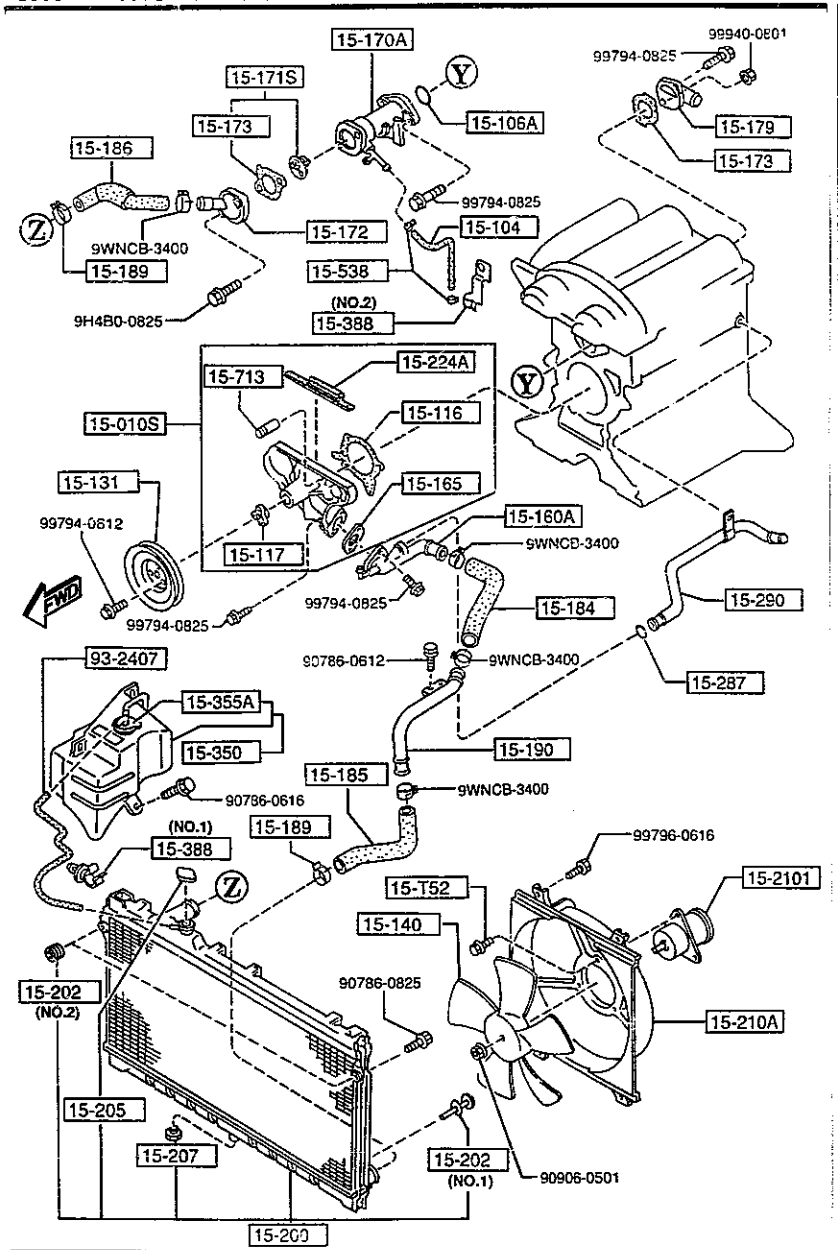

PART NO.	QTY	MODEL/RESTRICTION	MODEL/RESTRICTION	MODEL/RESTRICTION	FROM-TO
15-T52		SCREW,MOTOR-ELECTRIC FAN			
B6S8-15-T52	3				
15-010S		PUMP SET,WATER			
8ABB-15-010	1				
15-104		HOSE,WATER BY-PASS			
B61P-15-261A	1				
15-106A		RING,'O'-WATER PUMP			
B61P-15-106	1				
15-116		GASKET,WATER PUMP			
B6BF-15-116	1				
15-117		BOSS,W.PUMP PULLEY			
E301-15-117	1				
15-131		PULLEY,WATER PUMP			
B3C7-15-131	1				
15-140		FAN,COOLING			
B61P-15-140A	1	(MT)			
B64J-15-140	1	CALSONIC (AT)			
15-160A		INLET,WATER PUMP			
B61P-15-160	1				
15-165		GASKET,W.PUMP INLET			
M621-15-165	1	NON ASBESTOS			
15-170A		COVER,THERMO			
BPE8-15-170A	1				
15-171S		THERMOSTAT SET			
8AB8-15-171	1				
15-172		COVER,THERMOSTAT			
BPE8-15-172	1				

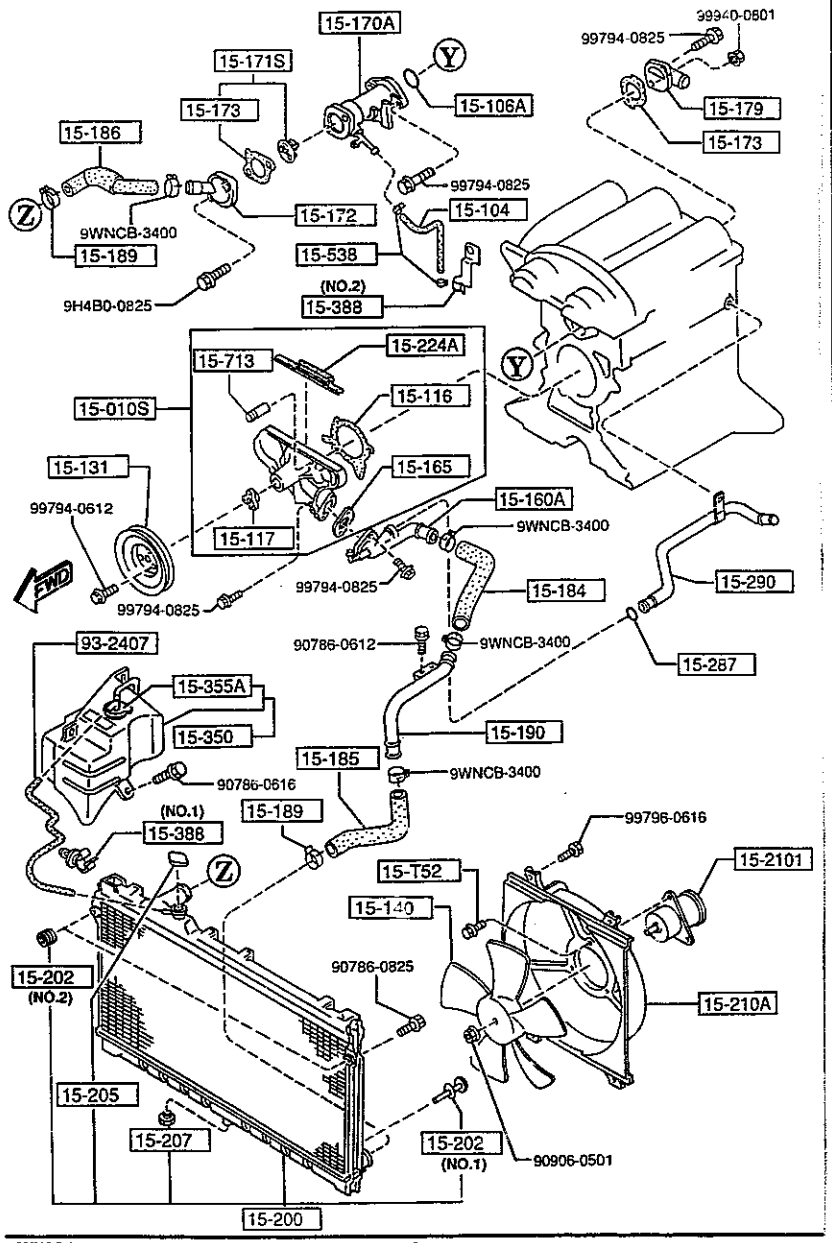

AUNA04

PART NO.	QTY	MODEL/RESTRICTION	MODEL/RESTRICTION	MODEL/RESTRICTION	FROM-TO
15-173		GASKET,THERMOSTAT COVER			
B621-15-173	2	NON ASBESTOS			
15-179		OUTLET,WATER			
BPE8-15-179	1				
15-184		HOSE,WATER			
B61P-15-184	1				
15-185		HOSE,WATER			
BPE8-15-185	1				
15-186		HOSE,WATER			
BPE8-15-186	1				
15-189		CLAMP,HOSE			
B366-15-182	2				
15-190		PIPE,WATER			
B61P-15-190	1				
15-200		RADIATOR			
BPE8-15-200	1	(MT)			
BPE9-15-200	1	(AT)			
15-202		RUBBER,MOUNT			
*B61P-15-202	2	(ILLUST. NO.1)			4509-
*N326-15-202	2	(ILLUST. NO.2)			4509-
15-205		CAP,RADIATOR			
D316-15-205	1	CALSONIC			
15-207		COCK,DRAIN			
NF01-15-203	1	CALSONIC			
15-210A		COWLING,RADIATOR			
B61P-15-210B	1				

4509 NA3***-518031

CAT. AUNA04-03

1995-04

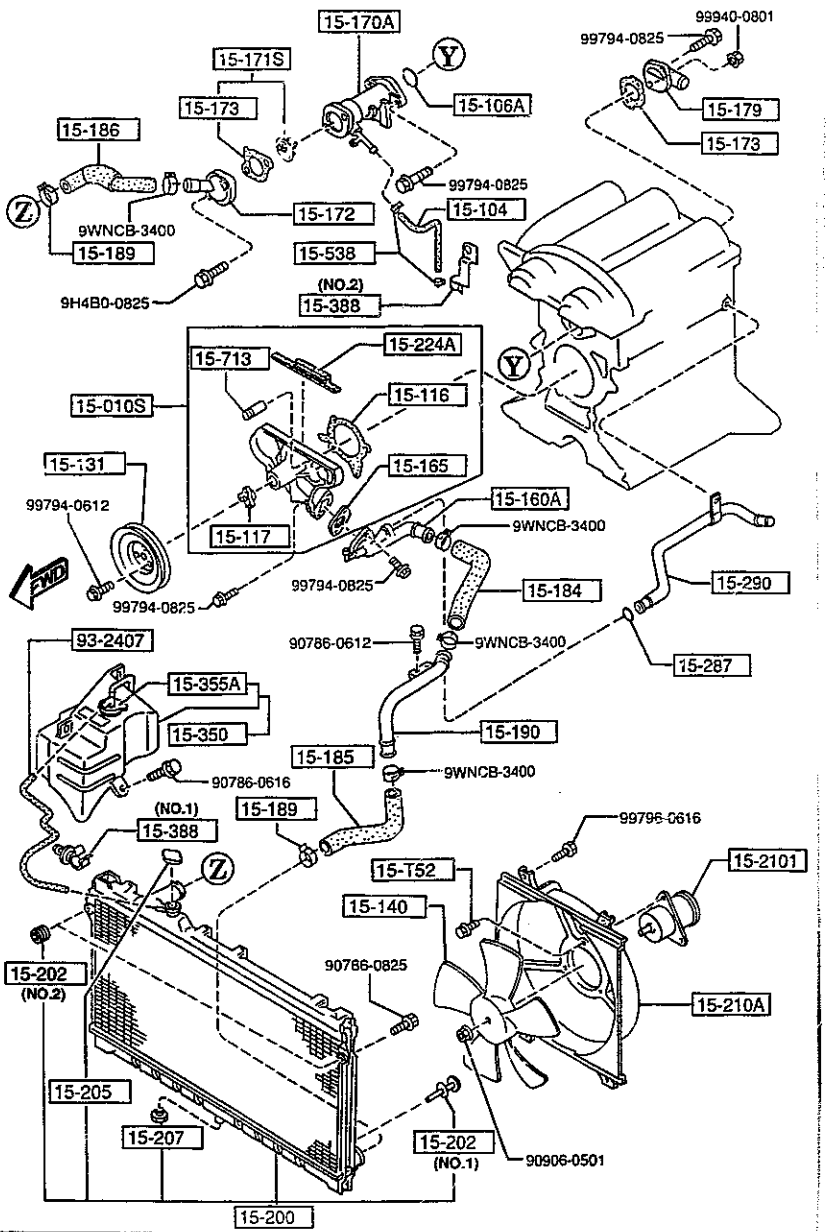

AUNA04

PART NO.	QTY	MODEL/RESTRICTION	MODEL/RESTRICTION	MODEL/RESTRICTION	FROM-TO
15-2101		FAN DRIVE			
B61P-15-150B	1	(MT)			
B64J-15-150A	1	(AT)			
15-224A		RUBBER,SEAL			
B660-10-543B	1				
15-287		RING,'O'-WATER BYPASS			
E301-15-287	1				
15-290		PIPE,BYPASS			
BPE8-15-290	1				
15-350		TANK,SUB-RADIATOR			
B61P-15-350D	1				
15-355A		CAP,SUB TANK			
B61P-15-355A	1				
15-388		CLIP,HOSE-SUB T.& WATER H			
F201-15-388A	1	(ILLUST. NO.1)			
B61P-15-547	1	(ILLUST. NO.2)			
15-538		CLAMP,WATER HOSE			
JF02-15-538	2				
15-713		SET PIN,SPRING			
F801-15-713	1				
93-2407		HOSE,WATER			
99324-07610	1				

CAT. AUNA04-03

1995-04

1580 BRACKET,PULLEY & BELT

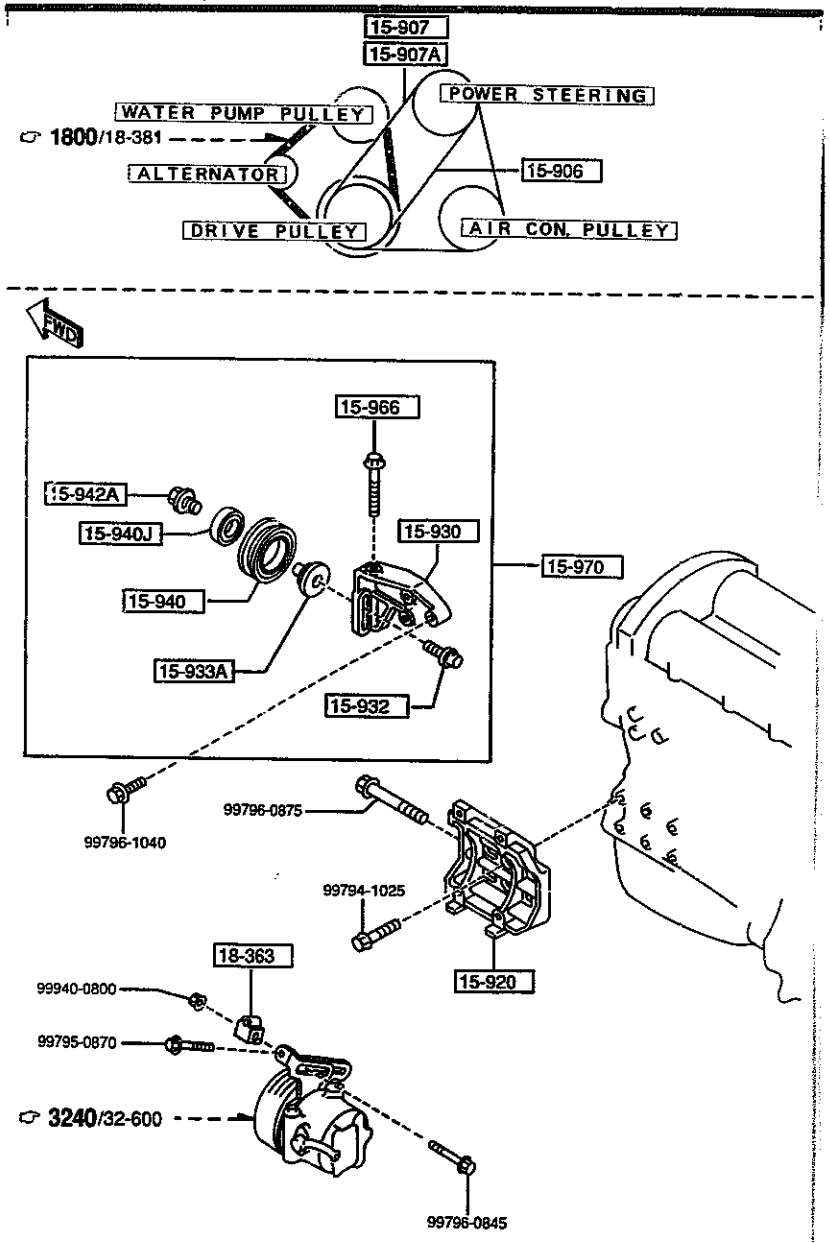

AUNA04

1580 -1 BRACKET,PULLEY & BELT

PART NO.	QTY	MODEL/RESTRICTION	MODEL/RESTRICTION	MODEL/RESTRICTION	FROM-TO
15-906		BELT'V'			
B61P-15-907A	1	L=855 4PK RIB.BELT (W/O AIR CON.) (W/POWER STEERING)			
15-907		BELT'V'			
BPF3-15-909	1	(A) (W/AIR CON.) (W/POWER STEERING)			
15-907A		BELT'V'			
B3C7-15-907C	1	RIB-ACE 4PK848 (W/AIR CON.) (W/POWER STEERING)			
15-920		BRACKET,COMPRESSOR			
BPE8-15-810A	1	(A) (W/AIR CON.)			
15-930		BRACKET,IDLE PULLEY			
BP01-15-951	1	(A) (W/AIR CON.) (W/POWER STEERING)			
15-932		SHAFT,PULLEY			
B631-15-932	1	(A) (W/AIR CON.) (W/POWER STEERING)			
15-933A		COLLAR			
BP01-15-933	1	(A) (W/AIR CON.) (W/POWER STEERING)			
15-940		PULLEY,IDLE			
BP01-15-940	1	(A) (W/AIR CON.) (W/POWER STEERING)			
15-940J		BEARING			
99606-83020	1	(W/AIR CON.) (W/O POWER STEERING)			
15-942A		COLLAR			
E564-15-942	1	(A) (W/AIR CON.) (W/O POWER STEERING)			

CAT. AUNA04-03 1995-04

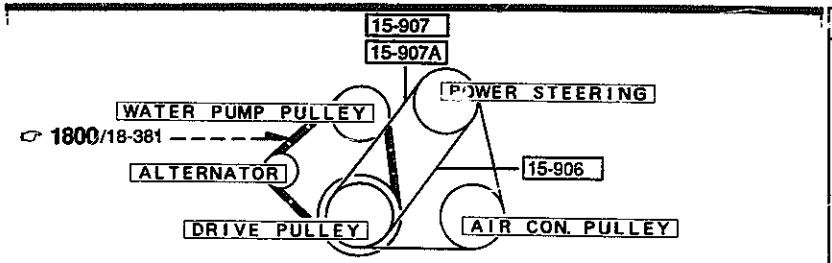

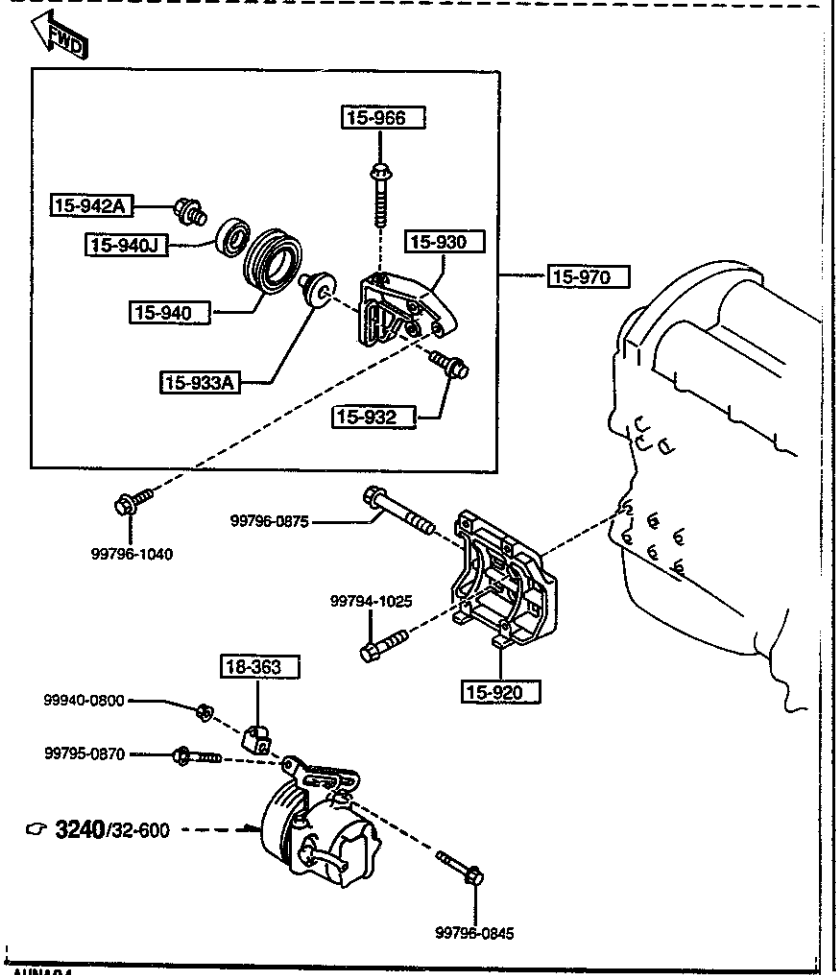

AUNA04

PART NO.	QTY	MODEL/RESTRICTION	MODEL/RESTRICTION	MODEL/RESTRICTION	FROM-TO
15-966 E564-15-934	1	BOLT,ADJUST (A) (W/AIR CON.) (W/O POWER STEERING)			
15-970 BP01-15-930	1	PULLEY,IDLE (A) (W/AIR CON.) (W/O POWER STEERING)			
18-363 FP02-18-363	1	SPACER,STRAP (W/O AIR CON.) (W/POWER STEERING)			

CAT. AUNA04-03 1995-04

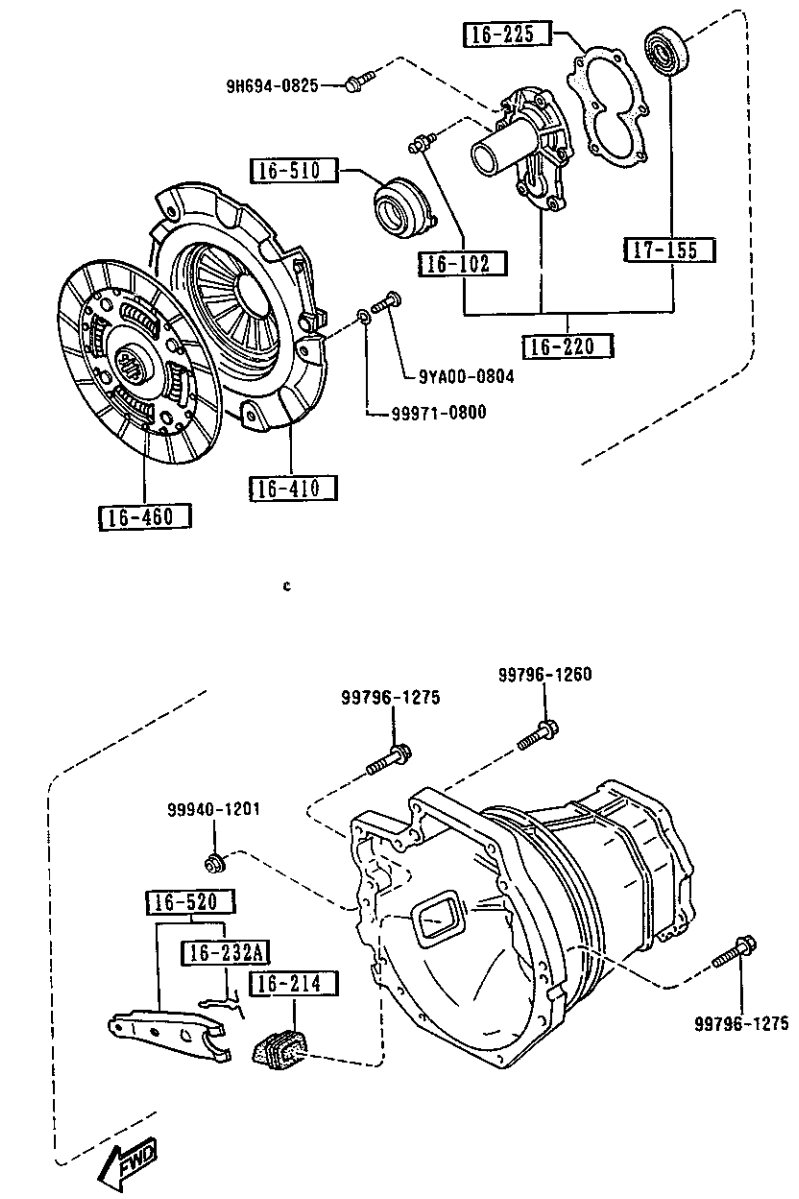

AUNA04

1600 -1 * CLUTCH DISC & COVER (MANUAL)

PART NO.	QTY	MODEL/RESTRICTION	MODEL/RESTRICTION	MODEL/RESTRICTION	FROM-TO
16-102		PIN,PIVOT-CLUTCH REL .FORK			
0603-16-102B	1				
16-214		COVER,DUST-CLUTCH FO RK			
FE86-16-214	1				-4301
FE51-16-214	1				4301-
16-220		COVER,FRONT CLUTCH			
B622-16-220	1				
16-225		GASKET,FRONT COVER			
FE50-16-225A	1				
16-232A		SUPPORTER,FORK			
1416-16-232A	1				
16-410		COVER,CLUTCH			
BP07-16-410	1				
16-460		DISC,CLUTCH			
BP07-16-460	1				
16-510		COLLAR,CLUTCH REL.			
B622-16-510	1				
16-520		FORK,CLUTCH RELEASE			
B622-16-520	1				
17-155		SEAL,OIL			
H501-17-103	1				

4301 NA3***-514672

CAT. AUNA04-03 1995-04

1700 TRANSMISSION CASE (MANUAL)

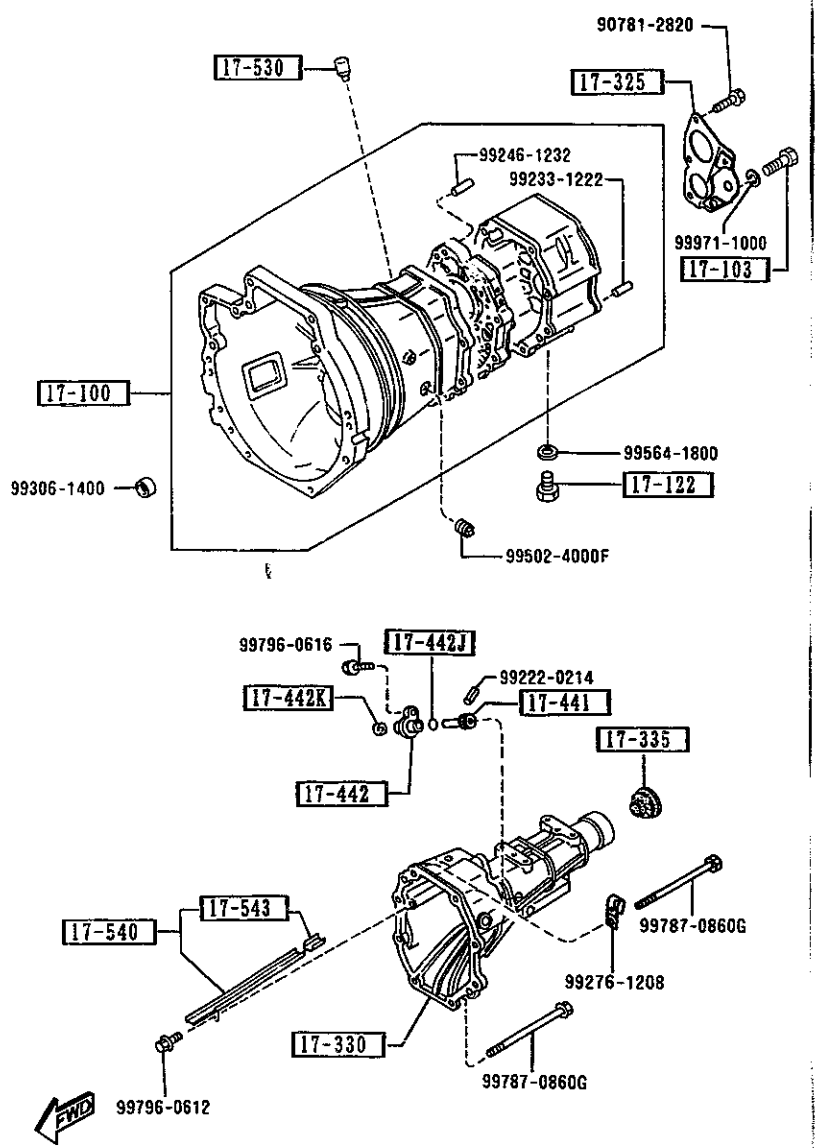

AUNA04

PART NO.	QTY	MODEL/RESTRICTION	MODEL/RESTRICTION	MODEL/RESTRICTION	FROM-TO
17-100		CASE,T/MISSION			
M526-17-100	1				-4301
C (M526-17-100A)					
M526-17-100A	1				4301-
17-103		BOLT			
M501-17-103	2				
17-122		PLUG,MAGNET			
0810-17-121	1				
17-325		COVER,BEARING			
M501-17-370A	1				
17-330		HOUSING,EXTENSION			
M519-17-330	1				
17-335		SEAL,OIL			
M507-17-335A	1				
17-441		GEAR,DRIVEN			
M510-17-441	1	N=22			
17-442		SLEEVE,SPEEDOMETER			
1669-17-442B	1				
17-442J		RING,'O'			
1011-17-443	1				
17-442K		SEAL,OIL			
99586-08166	1				
17-530		BREATHER,AIR-T/MISSION			
0884-17-530	1				
17-540		PASS,OIL			
M509-17-540	1				
17-543		RUBBER,SEAL			
M501-17-543A	1				

M526-17-100 4301 NA3***-514672
FE51-16-214
C M526-17-100A

CAT. AUNA04-03 1995-04

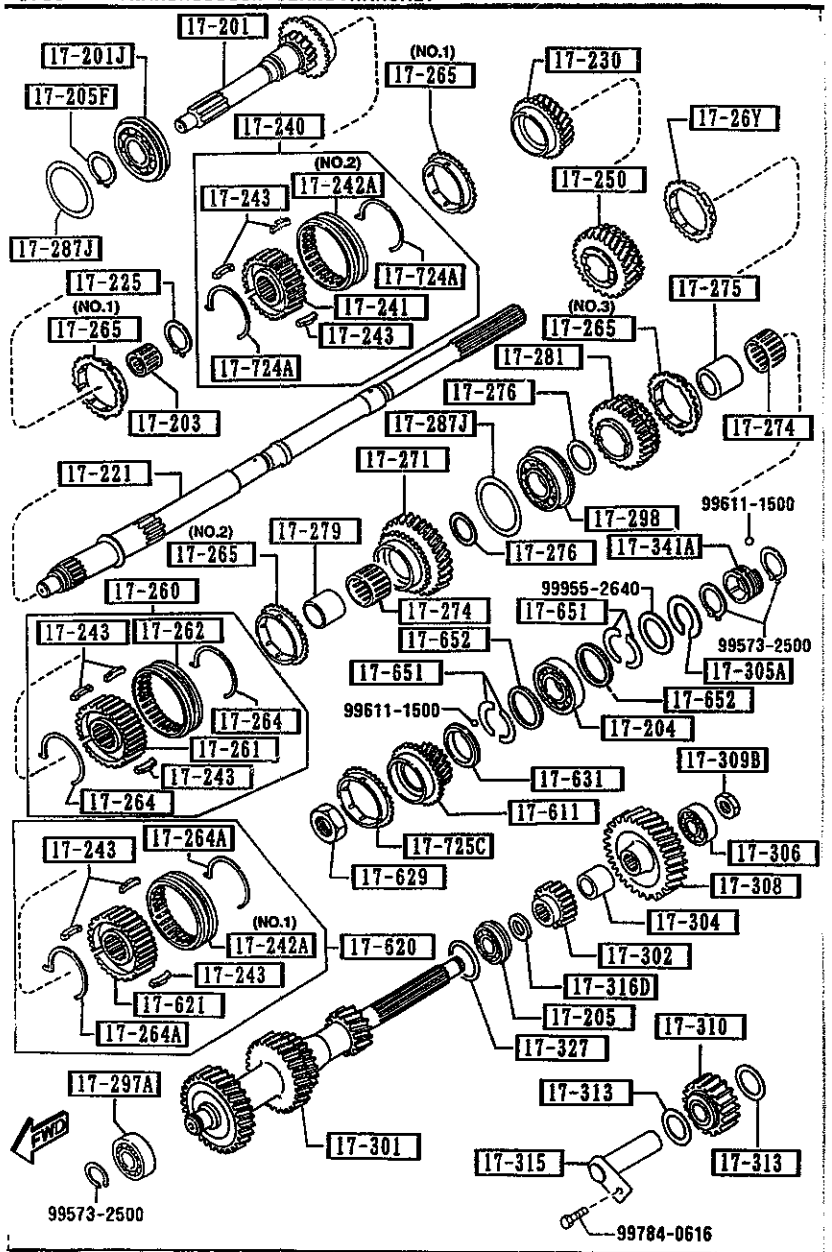

AUNA04

PART NO.	QTY	MODEL/RESTRICTION	MODEL/RESTRICTION	MODEL/RESTRICTION	FROM-TO
17-201 M516-17-201	1	GEAR,MAIN DRIVE			
17-201J M502-17-295C	1	BEARING,BALL-MAIN DRIVE GEAR			
17-203 M501-17-210A	1	BEARING,NEEDLE			
17-204 M503-17-204	1	BEARING,BALL-MAIN SHAFT			
17-205 R502-17-306A	1	BEARING,ROLLER			
17-205F M501-17-205	1	RING,RETAINING			
17-221 M505-17-221B	1	SHAFT,MAIN			
17-225 0317-17-225	1	RING,SNAP			
17-230 M513-17-231 AN(M513-17-231B)	1	GEAR,3RD			-4106
M513-17-231B	1				4106-
17-240 M517-17-240	1	HUB SET,CLUTCH-3RD & 4TH			
17-241 M501-17-241C	1	HUB,CLUTCH			
17-242A F401-17-242A	1	SLEEVE,CLUTCH HUB (ILLUST. NO.1)			
M502-17-242	1	(ILLUST. NO.2)			
17-243 F401-17-243A	9	KEY,SYNCHRONIZER			

4106 NA3***-509503

CAT. AUNA04-03

1995-04

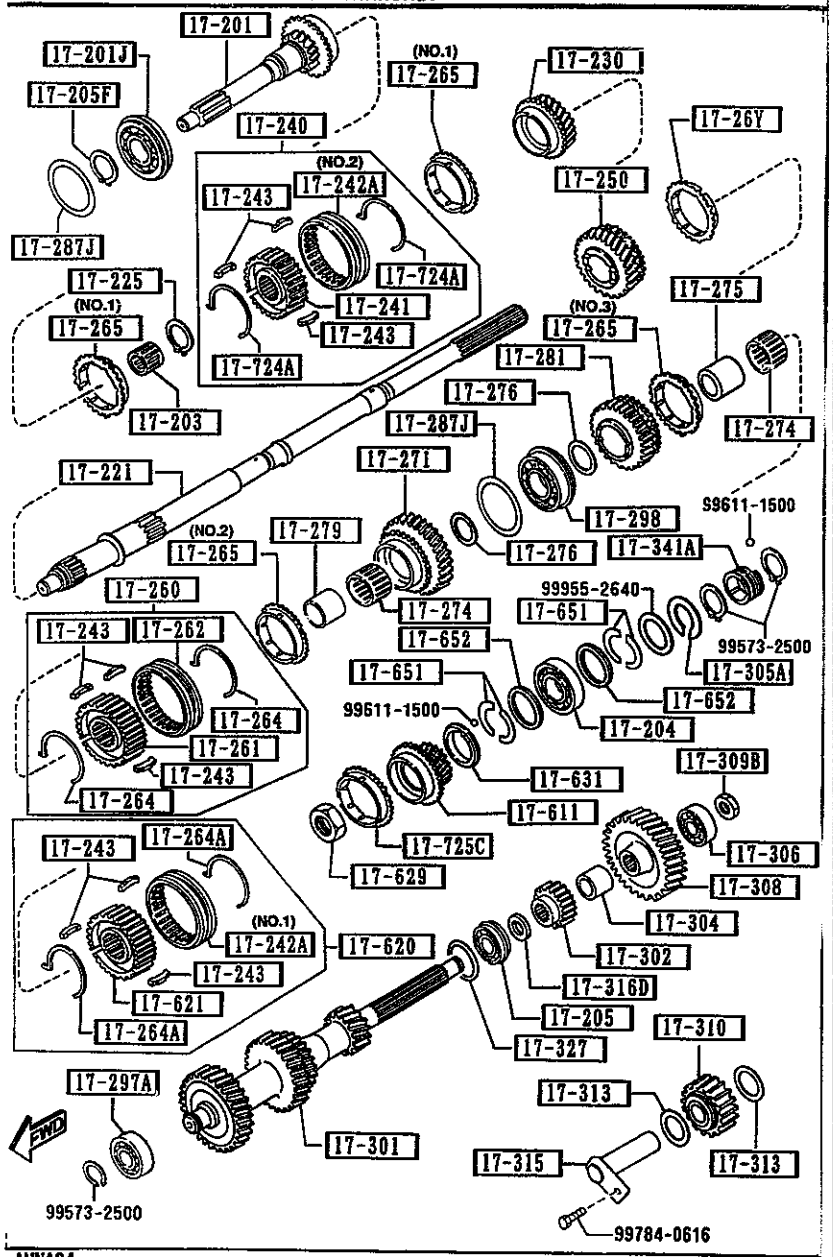

AUNA04

PART NO.	QTY	MODEL/RESTRICTION	MODEL/RESTRICTION	MODEL/RESTRICTION	FROM-TO
17-250		GEAR,2ND			
M520-17-251A	1				
17-26Y		RING,SYNCHRONIZER			
R504-17-26Y	1				
17-260		HUB SET,CLUTCH-1ST & 2ND			
M517-17-260	1				
17-261		HUB,CLUTCH			
M511-17-261	1				
17-262		SLEEVE,CLUTCH HUB			
M505-17-262	1				
17-264		SPRING,SYNCHRO. KEY			
G401-17-264	2				
17-264A		SPRING,SYNCHRONIZER			
F401-17-264A	2				
17-265		RING,SYNCHRONIZER			
G501-17-265A	2	(ILLUST. NO.1)			
M502-17-265C	1	(ILLUST. NO.2)			
M504-17-265A	1	(ILLUST. NO.3)			
17-271		GEAR,1ST			
M516-17-271A	1				
17-274		BEARING,NEEDLE			
4069-17-283A	2				
17-275		RACE,INNER			
4069-17-284E	1				
17-276		WASHER,THRUST			
0259-17-274A	2	T=3MM			
0259-17-276	2	T=2.2MM			
0259-17-277		T=2.7MM			

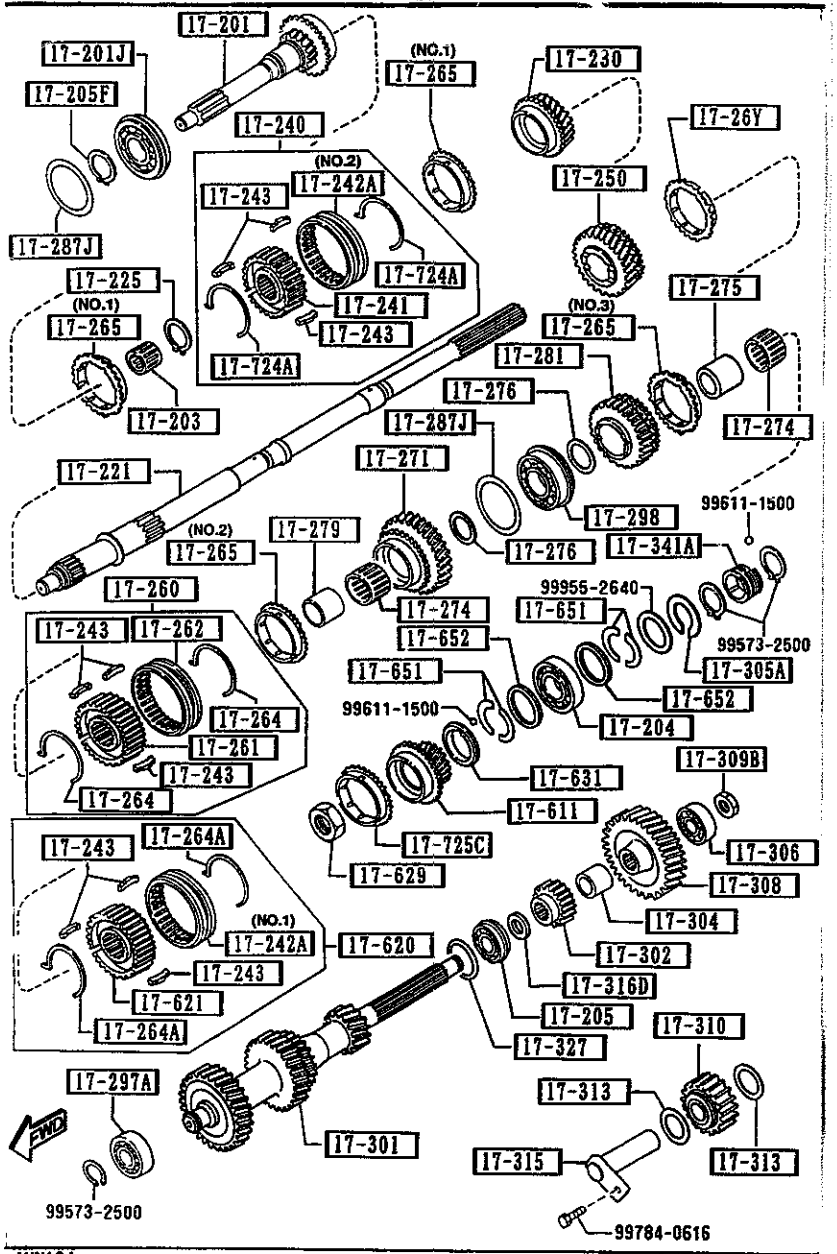

AUNA04

PART NO.	QTY	MODEL/RESTRICTION	MODEL/RESTRICTION	MODEL/RESTRICTION	FROM-TO
CONT'D	2				
0259-17-278	2	T=3.2MM			
0259-17-279	2	T=3.7MM			
+----------+ | 17-279 | +----------+ 8540-17-275A	1	SLEEVE,GEAR			
+----------+ | 17-281 | +----------+ M513-17-281	1	GEAR,REVERSE			
+----------+ | 17-287J | +----------+ 99963-6310	2	SHIM,ADJUST T=0.1MM			
99963-6315	1	T=0.15MM			
99963-6330	2	T=0.3MM			
+----------+ | 17-297A | +----------+ M502-17-297A	1	BEARING,BALL-COUNTER SHAFT G.			
+----------+ | 17-298 | +----------+ M502-17-298A	1	BEARING			
+----------+ | 17-301 | +----------+ M528-17-301A	1	GEAR,COUNTER SHAFT			
+----------+ | 17-302 | +----------+ M516-17-302	1	GEAR,COUNTER REVERSE			
+----------+ | 17-304 | +----------+ M504-17-304	1	SPACER			
+----------+ | 17-305A | +----------+ 0839-17-305B	1	RING,RETAINING-BALL BEARING			
+----------+ | 17-306 | +----------+ M502-17-299A AN(M502-17-299B)	1	BEARING,BALL			-4628
*M502-17-299B	1				4628-

4628 NA3***-521168

CAT. AUNA04-03 1995-04

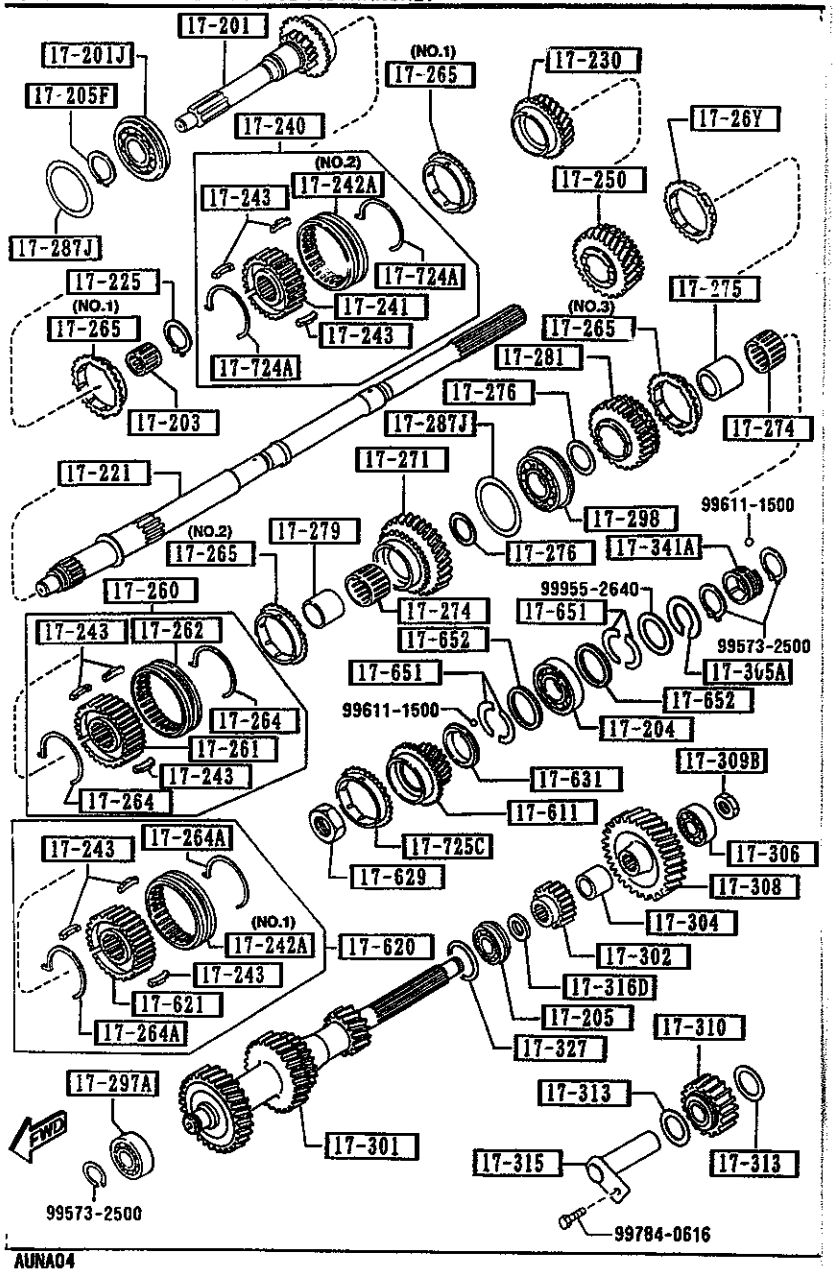

AUNA04

PART NO.	QTY	MODEL/RESTRICTION	MODEL/RESTRICTION	MODEL/RESTRICTION	FROM-TO
17-308		GEAR,COUNTER			
M510-17-308	1				
17-309B		NUT,LOCK-COUNTER SHAFT BR			
M501-17-309	1				
17-310		GEAR,REVERSE IDLE			
M513-17-310	1				
17-313		WASHER,THRUST-REVERSE IDLE G.			
M501-17-313	2	T=2MM			
17-315		SHAFT,REV. IDLE GEAR			
M501-17-140	1				
17-316D		SPACER			
R502-17-316	1				
17-327		SHIM,ADJUST-COUNTER SHAFT GEAR			
0305-17-327	2	T=0.1MM			
0305-17-328	1	T=0.3MM			
17-341A		GEAR,SPEEDO.DRIVE			
M503-17-341	1				
17-611		GEAR,OVER TOP			
M517-17-611	1				
17-620		HUB SET,CLUTCH-O.T. & REV			
M505-17-620	1				
17-621		HUB,CLUTCH			
M505-17-621	1				
17-629		NUT,LOCK-CLUTCH HUB			
8601-17-629	1				
17-631		WASHER,THRUST LOCK-OVER TOP G.			
0884-17-632B		T=6.2MM			

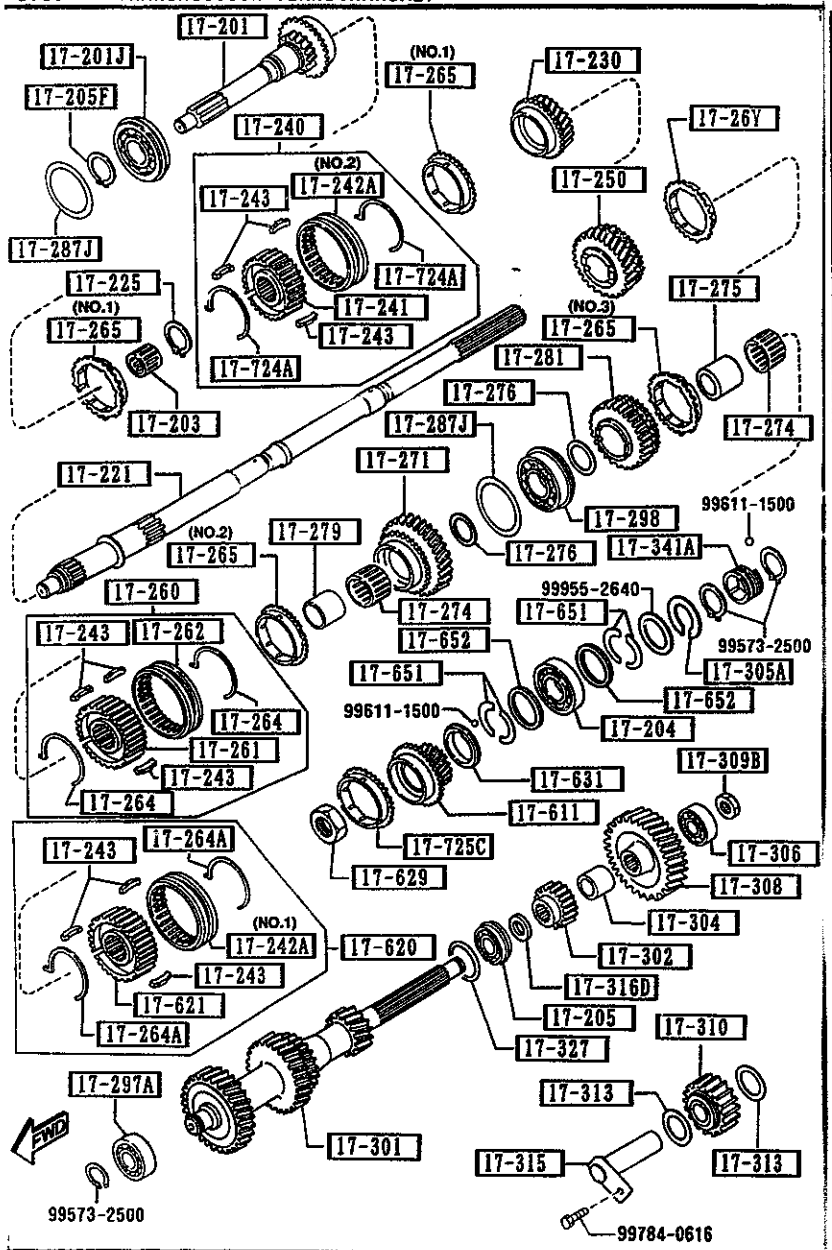

AUNA04

PART NO.	QTY	MODEL/RESTRICTION	MODEL/RESTRICTION	MODEL/RESTRICTION	FROM-TO
CONT'D					
	1				
0884-17-633B	1	T=6.4MM			
0884-17-634B	1	T=6.5MM			
0884-17-635B	1	T=6.6MM			
+---------+					
| 17-651 |		WASHER,THRUST			
+---------+					
M501-17-651	4	T=3MM			
M501-17-653	2	T=3.1MM			
M501-17-654	2	T=3.2MM			
M501-17-655	2	T=2.9MM			
+---------+					
| 17-652 |		RING,THRUST WASHER			
+---------+					
M501-17-652	2	T=2MM			
+---------+					
| 17-724A |		SPRING,SYNCHRO.KEY			
+---------+					
W501-17-724	2				
+---------+					
| 17-725C |		RING,SYNCHRONIZER			
+---------+					
V501-17-725	1				

CAT. AUNA04-03

1995-04

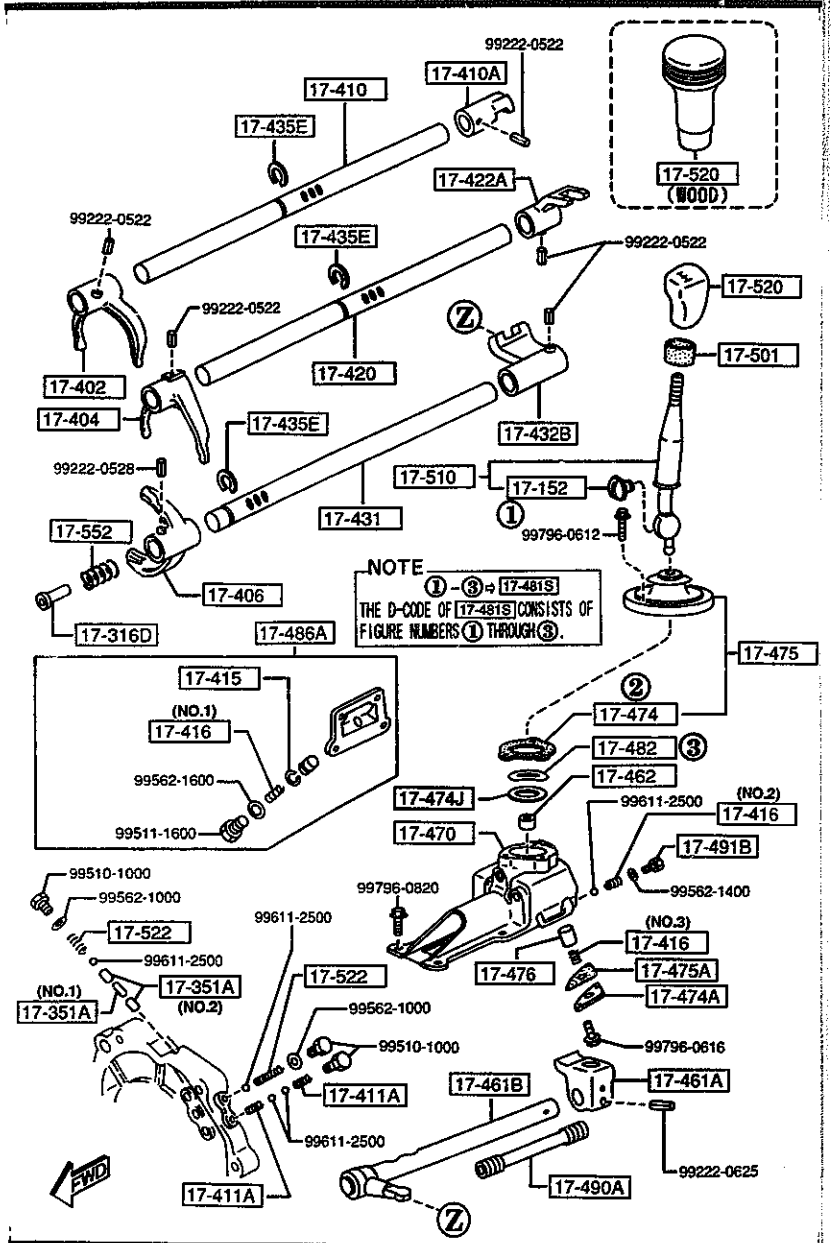

AUNA04

PART NO.	QTY	MODEL/RESTRICTION	MODEL/RESTRICTION	MODEL/RESTRICTION	FROM-TO
17-152		BUSH			
M501-17-515	1				
17-316D		SPACER			
M504-17-316	1				-4124
17-351S		PIN,INTER LOCK			
R501-17-351	1	(ILLUST. NO.1)			
0114-17-351	2	(ILLUST. NO.2)			
17-402		FORK,SHIFT(1ST&2ND)			
M503-17-402	1				
17-404		FORK,SHIFT(3RD&4TH)			
M501-17-404B	1				
17-406		FORK,SHIFT			
M504-17-406A	1				
17-410		ROD,SHIFT(1ST&2ND)			
M503-17-411	1				
17-410A		END,S/ROD(1ST&2ND)			
M507-17-412	1				
17-411A		SPRING,SHIFT ROD-REVERSE			
0014-17-411	2				
17-415		RING,RETAINING-SHIFT ROD END			
3648-17-415	1				
17-416		SPRING,SHIFT ROD END			
M501-17-416	1	(ILLUST. NO.1)			
M504-17-416	1	(ILLUST. NO.2)			
M505-17-416	1	(ILLUST. NO.3)			
17-420		ROD,SHIFT(3RD&4TH)			
M504-17-421	1				
17-422A		END,S/ROD(3RD&4TH)			

4124 NA3***-510839

CAT. AUNA04-03 1995-04

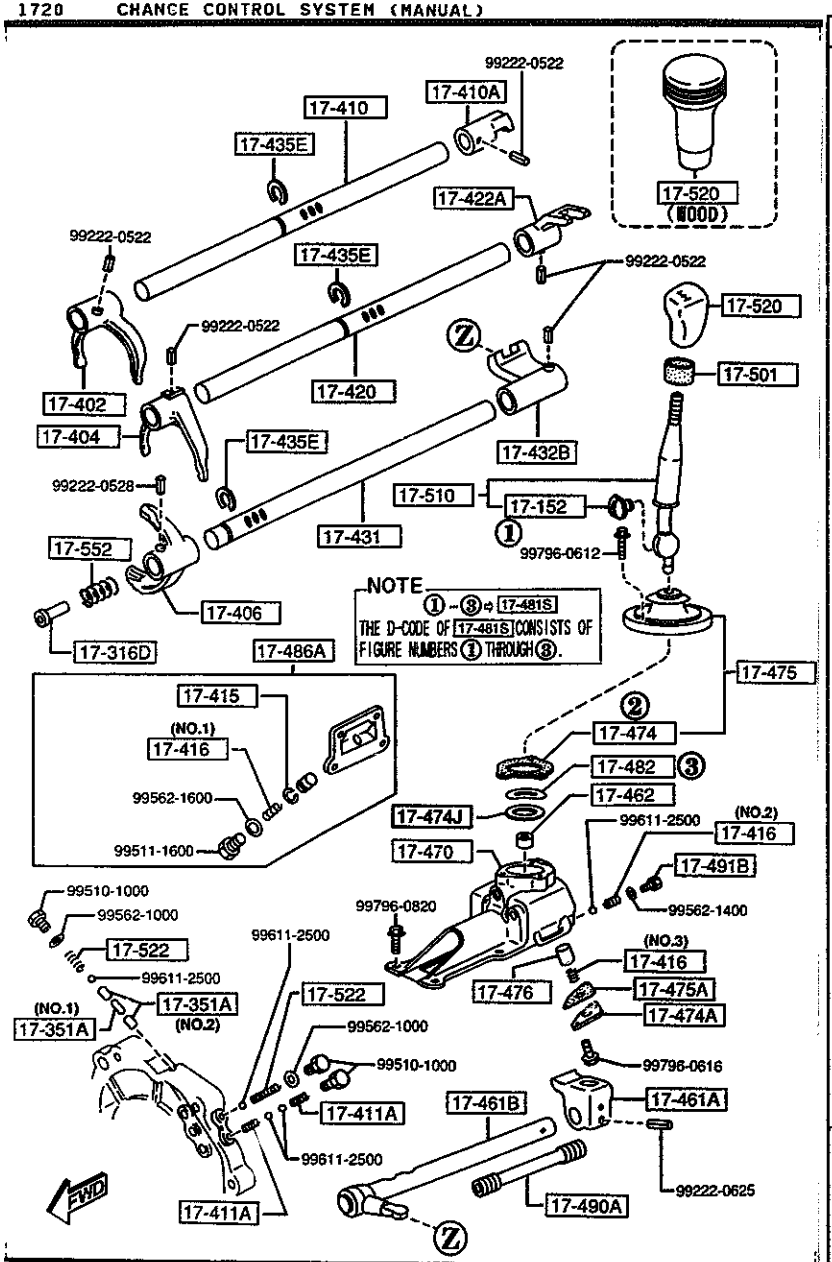

AUNA04

PART NO.	QTY	MODEL/RESTRICTION	MODEL/RESTRICTION	MODEL/RESTRICTION	FROM-TO
CONT'D					
M507-17-422	1				
17-431		ROD,SHIFT-OVER TOP & REVERSE			
M506-17-431A	1				
17-432B		END,SHIFT ROD(O/TOP& REV.)			
M508-17-432	1				
17-435E		RING,RETAINING			
R502-17-435	3				
17-461A		END,CONTROL LEVER			
M508-17-461A	1				
17-461B		ROD,CONTROL			
M516-17-450A	1				
17-462		SHEET,SPRING			
0398-17-462A	1				
17-470		CASE,CHANGE CONTROL			
M510-17-470C	1				
17-474		GASKET,COVER PLATE			
0303-17-474	1				
17-474A		CAP,SPRING			
M501-17-474	1				
17-474J		SHIM,ADJUST			
99963-3330	1	T=0.3MM			
17-475		BOOT,DUST-CHANGE LEVER			
M513-17-480A	1				
17-475A		GASKET,S. .ING CAP			
M501-17-475	1				
17-476		SPINDLE,SELECT LOCK			
M502-17-476A	1				

CAT. AUNA04-03

1995-04

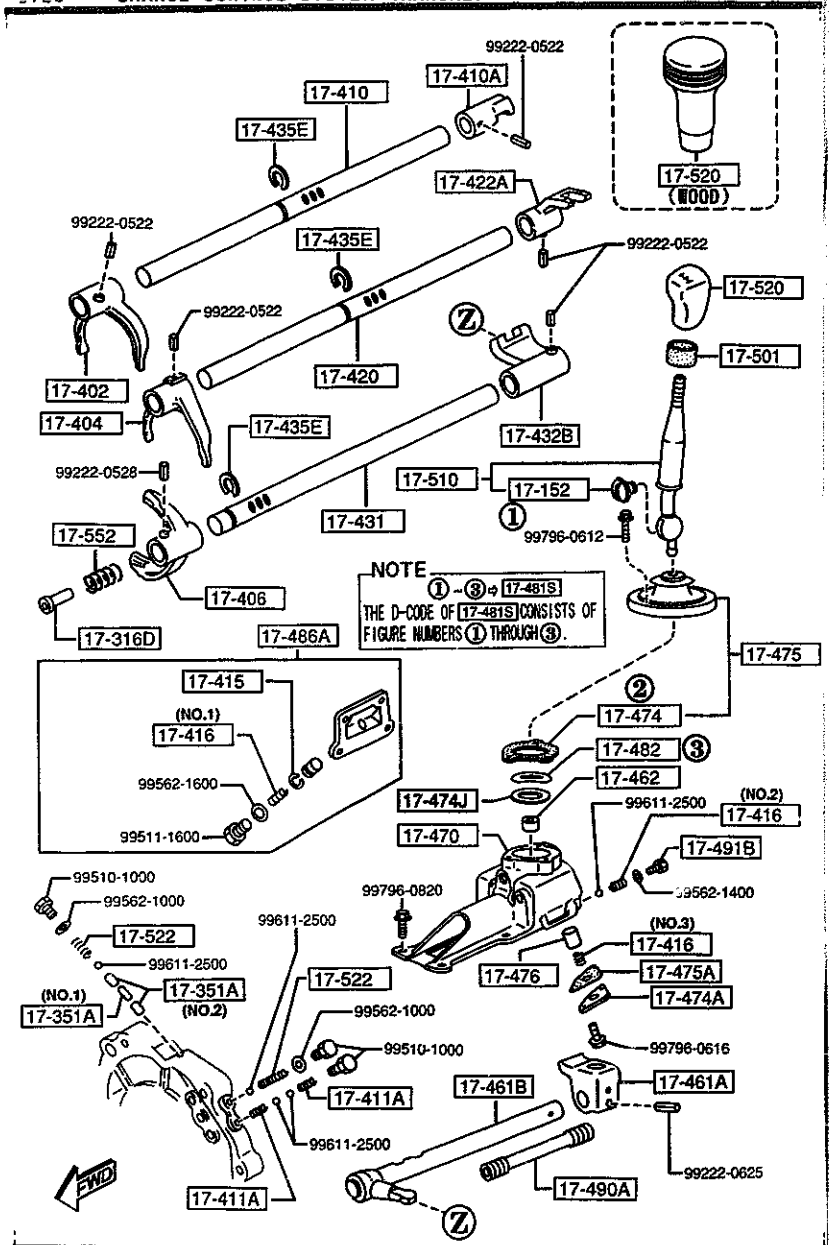

AUNA04

PART NO.	QTY	MODEL/RESTRICTION	MODEL/RESTRICTION	MODEL/RESTRICTION	FROM-TO
17-481S 8AN1-17-481	1	BUSH SET,CHANGE LEVER			
17-482 M505-17-482	1	WASHER,WAVE-CHANGE CONT.CASE			
17-486A R501-17-47X	1	COVER,BLIND			
17-490A M504-17-490A	1	COVER,ROD			
17-491B 0183-17-491	1	CAP,SPRING			
17-501 M501-17-501	1	INSULATOR,CHG LEVER			
17-510 M524-17-510C	1	LEVER,CHANGE			
17-520 M515-17-520	1	KNOB,CHANGE LEVER (URETHANE)			
00	INT-	NA3 NA5 NA4 NA6 BLACK			
M517-17-520	1	(WOOD)			
M518-17-520A	1	OPT, (LEATHER)			
17-522 0103-17-411	2	SPRING 5TH & REVERSE			
17-552 M504-17-552	1	SPRING			-4124
M505-17-552	1				4124-

4124 NA3***-510839

CAT. AUNA04-03 1995-04

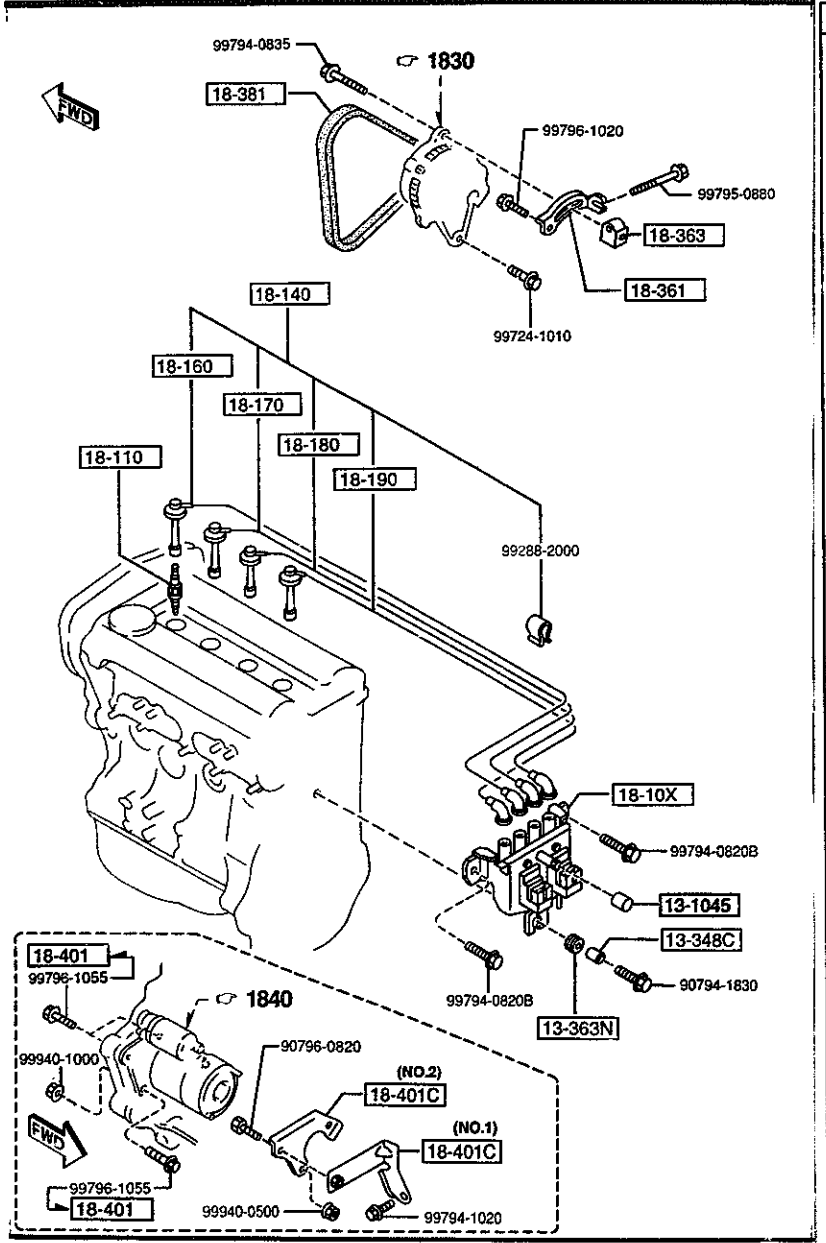

AUNA04

PART NO.	QTY	MODEL/RESTRICTION	MODEL/RESTRICTION	MODEL/RESTRICTION	FROM-TO
13-1045		CAP,BLIND			
JE08-13-104	1				
13-348C		SPACER			
B61P-13-348	1				
13-363N		RUBBER,MOUNTING			
B61P-13-363A	1				
18-10X		COIL & IGNITER			
BPE8-18-10XA	1				
18-110		PLUG,SPARK			
BP01-18-110	4	BKR5E-11 NGK (STD.)			
BP02-18-110	4	K16PR-U11 ND (STD.)			
BP03-18-110	4	BKR6E-11 NGK (OPTION COLD TYPE)			
BP04-18-110	4	K20PR-U11 ND (OPTION COLD TYPE)			
18-140		CORD SET,HI.TENSION			
BPE8-18-140A	1				
18-160		CORD NO.1,HI.TENSION			
BPE8-18-T51	1				
18-170		CORD NO.2,HI.TENSION			
BPE8-18-T52	1				
18-180		CORD NO.3,HI.TENSION			
BPE8-18-T53	1				
18-190		CORD NO.4,HI.TENSION			
BPE8-18-T54A	1				
18-361		STRAP,ALTERNATOR			
B6BF-18-361B A (B6BF-18-361C)	1				-3C13
B6BF-18-361C	1				3C13-

3C13 NA3***-508545

CAT. AUNA04-03

1995-04

1800 ENGINE ELECTRICAL SYSTEM

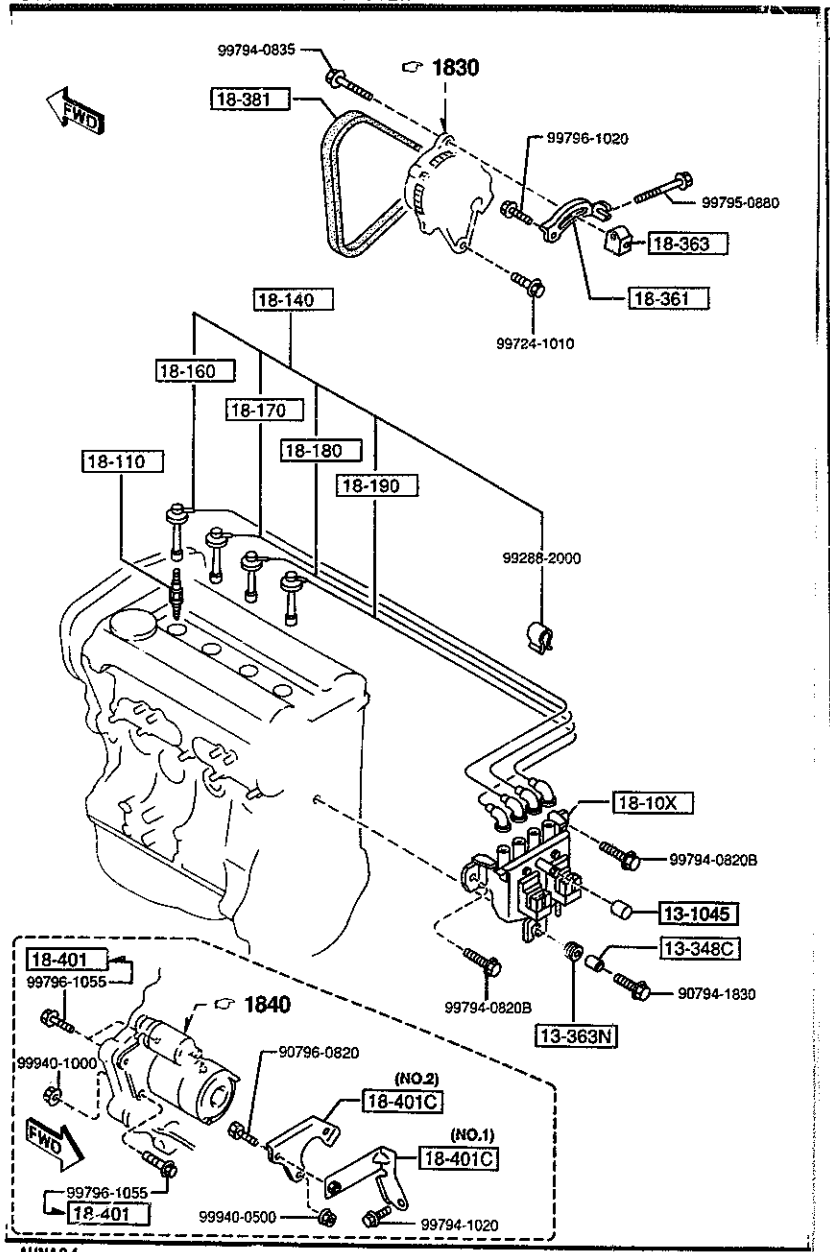

AUNA04

PART NO.	QTY	MODEL/RESTRICTION	MODEL/RESTRICTION	MODEL/RESTRICTION	FROM-TO
18-363		SPACER,STRAP			
FP01-18-363	1				
18-381		BELT'V'			
B6BF-18-381	1	4PK L=885 BANDO			
B596-18-381	1	4PK L=885 GOOD YEAR			4201-
18-401		BOLT,STARTER			
B6BG-18-401	3				3C01-
18-401C		BRACKET,STARTER			
BPE8-18-410	1	(ILLUST. NO.1)			
B660-18-411C	1	(ILLUST. NO.2)			

3C01 NA3***-507607
4201 NA3***-511601

CAT. AUNA04-03

1995-04

1830 ALTERNATOR

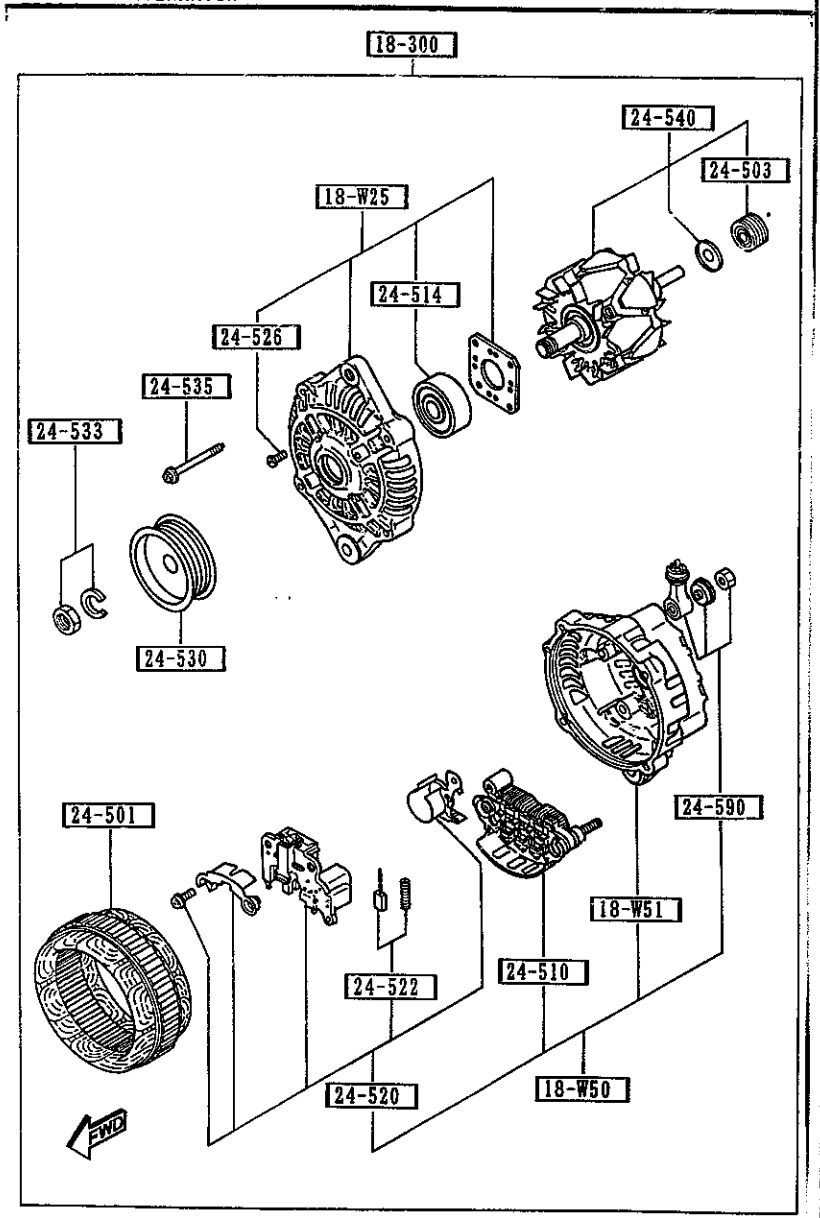

AUNA04

PART NO.	QTY	MODEL/RESTRICTION	MODEL/RESTRICTION	MODEL/RESTRICTION	FROM-TO
18-W25		COVER,FRONT-ALTERNATOR			
BPD3-18-W25	1				-4101
FS05-18-W25	1				4101-
18-W50		COVER,REAR-ALTERNATOR			
BPE8-18-W50	1				
18-W51		COVER,REAR-ALTERNATOR (G)			
FS05-18-W51	1				
18-300		ALTERNATOR			
BPE8-18-300	1	(MT)			
BPE9-18-300	1	(AT)			
24-501		STATOR			
JE15-18-W45	1				
24-503		BEARING,BALL-ALT. REAR			
N336-18-W36	1				
24-510		RECTIFIER			
BPE8-18-W60	1				
24-514		BEARING,BALL-ALT. FRONT			
PN16-18-W27	1				
24-520		REGULATOR,VOLTAGE			
B64J-18-W70A	1				
24-522		BRUSH			
B3C7-18-W77	2				
24-526		SCREW SET			
RF71-18-W26	1				
24-530		PULLEY			
B3C7-18-W10	1				
24-533		NUT SET			
B3C7-18-W05	1				

4101 NA3***-509503

CAT. AUNA04-03

1995-04

1830 ALTERNATOR

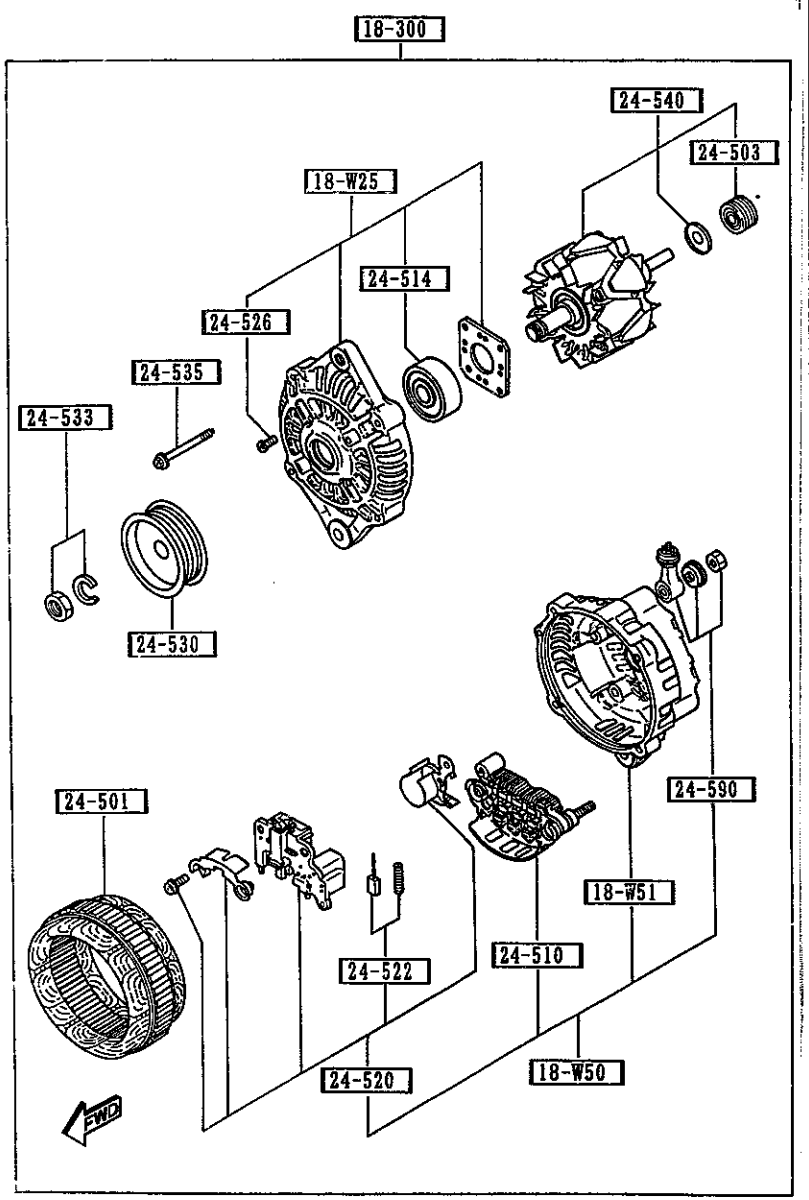

AUNA04

1830 -2 * ALTERNATOR

PART NO.	QTY	MODEL/RESTRICTION	MODEL/RESTRICTION	MODEL/RESTRICTION	FROM-TO
24-535		SCREW SET			
RF71-18-W20	1				
24-540		ROTOR			
BPD3-18-W35	1	(AT)			
B366-18-W35D	1	(MT)			
24-590		TERMINAL SET			
BPD3-18-W80	1				

CAT. AUNA04-03 1995-04

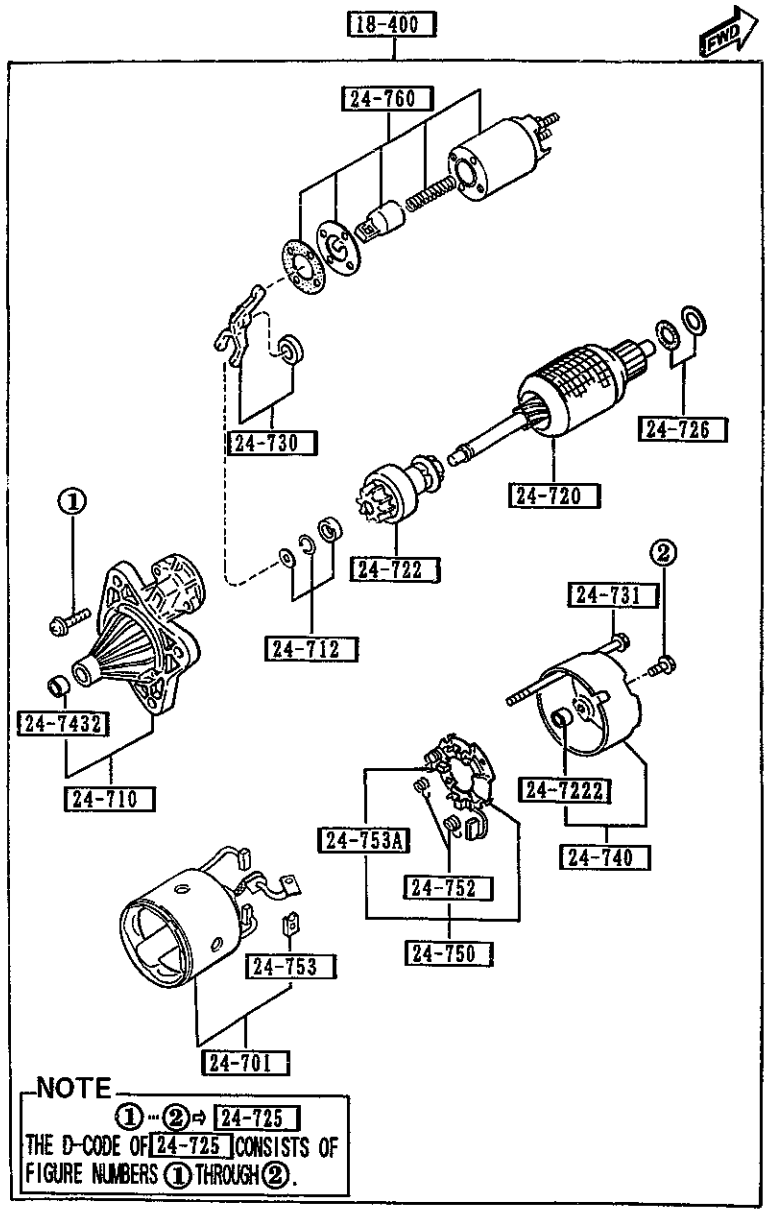

AUNA04

PART NO.	QTY	MODEL/RESTRICTION	MODEL/RESTRICTION	MODEL/RESTRICTION	FROM-TO
18-400		STARTER			
B61R-18-400A	1	NON ASBESTOS			
24-701		YOKE			
B61R-18-X65	1				
24-710		BRACKET,FRONT			
B61R-18-X00	1				
24-712		STOPPER SET			
E356-18-X30	1				
24-720		ARMATURE			
B6S8-18-X60	1	NON ASBESTOS			
24-722		CLUTCH,OVER RUNNING			
B630-18-X45	1				
24-7222		SLEEVE,BEARING-REAR			
E356-18-X81	1				
24-725		SCREW SET			
E356-18-X95	1				
24-726		WASHER SET			
E356-18-X92	1				
24-730		LEVER			
E356-18-X05	1				
24-731		BOLT SET			
B630-18-X90	2				
24-740		BRACKET,REAR			
E356-18-X80	1				
24-7432		SLEEVE,BEARING-FRONT			
F210-18-X01	1				

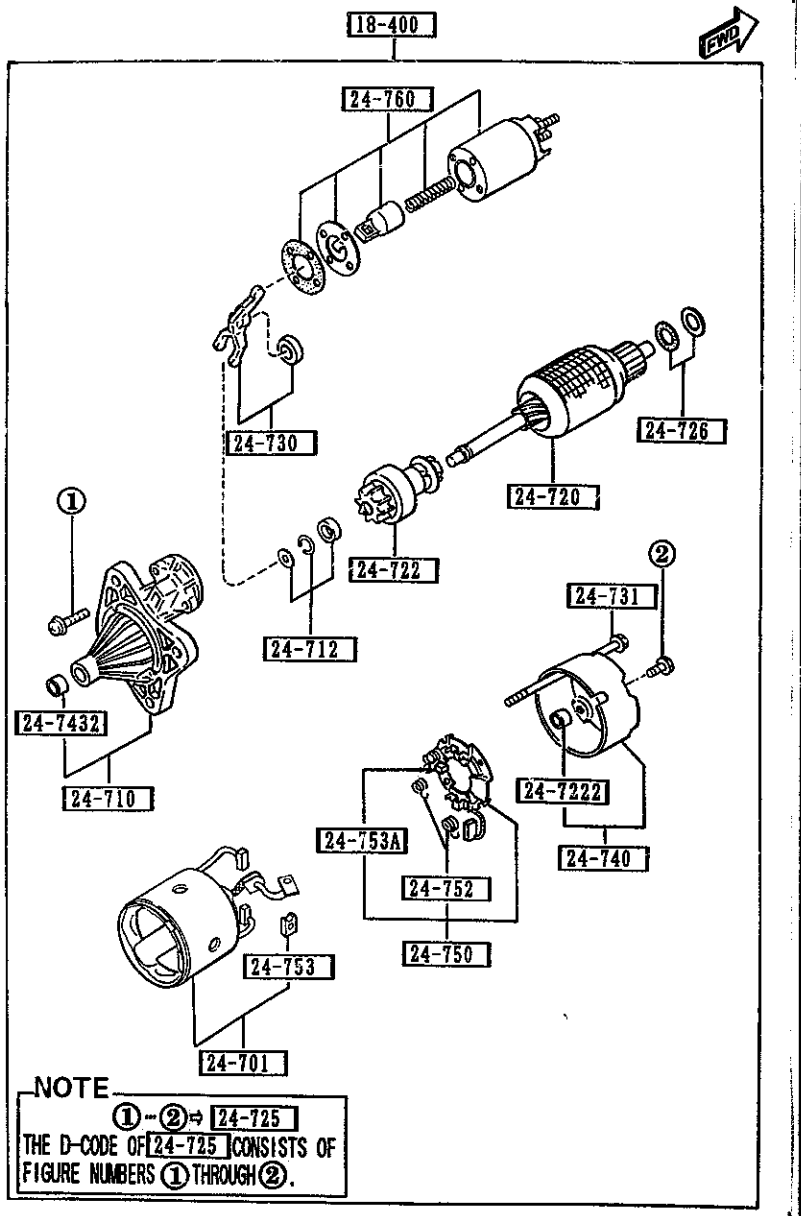

AUNA04

PART NO.	QTY	MODEL/RESTRICTION	MODEL/RESTRICTION	MODEL/RESTRICTION	FROM-TO
24-750		HOLDER,BRUSH			
B61R-18-X70	1				
24-752		SPRING,BRUSH			
0222-24-752A	4				
24-753		BRUSH,YOKE			
B630-18-X66	2				
24-753A		BRUSH			
B660-18-X66	2				
24-760		SWITCH			
E356-18-X10	1				

CAT. AUNA04-03

1995-04

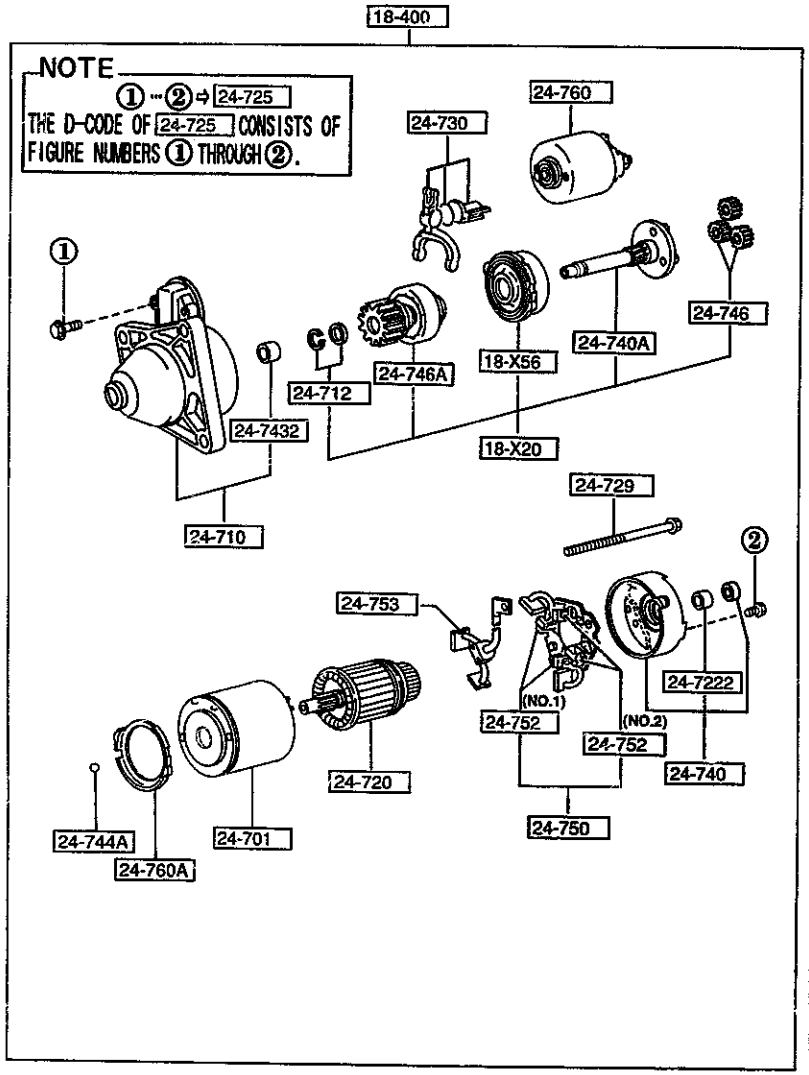

AUNA04

PART NO.	QTY	MODEL/RESTRICTION	MODEL/RESTRICTION	MODEL/RESTRICTION	FROM-TO
18-X20 AM15-18-X20	1	SHAFT,PINION			
18-X56 F225-18-X56	1	GEAR,INTERNAL-STARTER			
18-400 BPE9-18-400	1	STARTER			
24-701 JF01-18-X65	1	YOKE			
24-710 BPE9-18-X00	1	BRACKET,FRONT			
24-712 N325-18-X30	1	STOPPER SET			
24-720 F214-18-X60A	1	ARMATURE NON ASBESTOS			
24-7222 N326-18-X62A	1	SLEEVE,BEARING-REAR			
24-725 E356-18-X95	1	SCREW SET			
24-729 N326-18-X91	2	BOLT			
24-730 N326-18-X05	1	LEVER			
24-740 JF01-18-X80A	1	BRACKET,REAR			
24-740A F214-18-X40	1	SHAFT			
24-7432		SLEEVE,BEARING-FRONT			

CAT. AUNA04-03

1995-04

1840 A STARTER (AT)

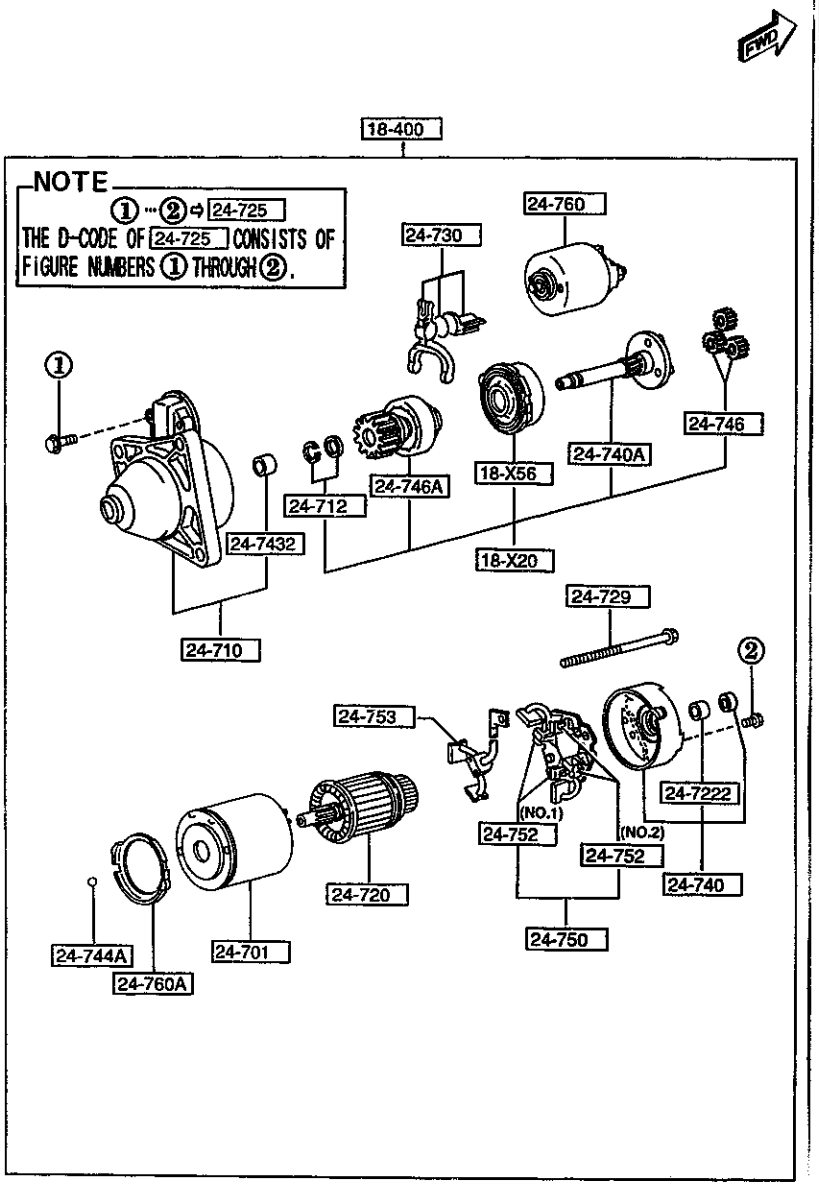

AUNA04

1840 A-2 * STARTER (AT)

PART NO.	QTY	MODEL/RESTRICTION	MODEL/RESTRICTION	MODEL/RESTRICTION	FROM-TO
CONT'D					
E356-18-X01	1				
24-744A		BALL,STEEL			
N326-18-X93	1				
24-746		GEAR			
N326-18-X57	3				
24-746A		PINION			
AM15-18-X25	1				
24-750		HOLDER,BRUSH			
F214-18-X70	1				
24-752		SPRING,BRUSH			
N318-18-X71	2	(ILLUST. NO.1)			
N326-18-X71	2	(ILLUST. NO.2)			
24-753		BRUSH,YOKE			
F214-18-X66	1				
24-760		SWITCH			
E356-18-X10	1				
24-760A		GASKET			
N326-18-X87	1				

CAT. AUNA04-03 1995-04

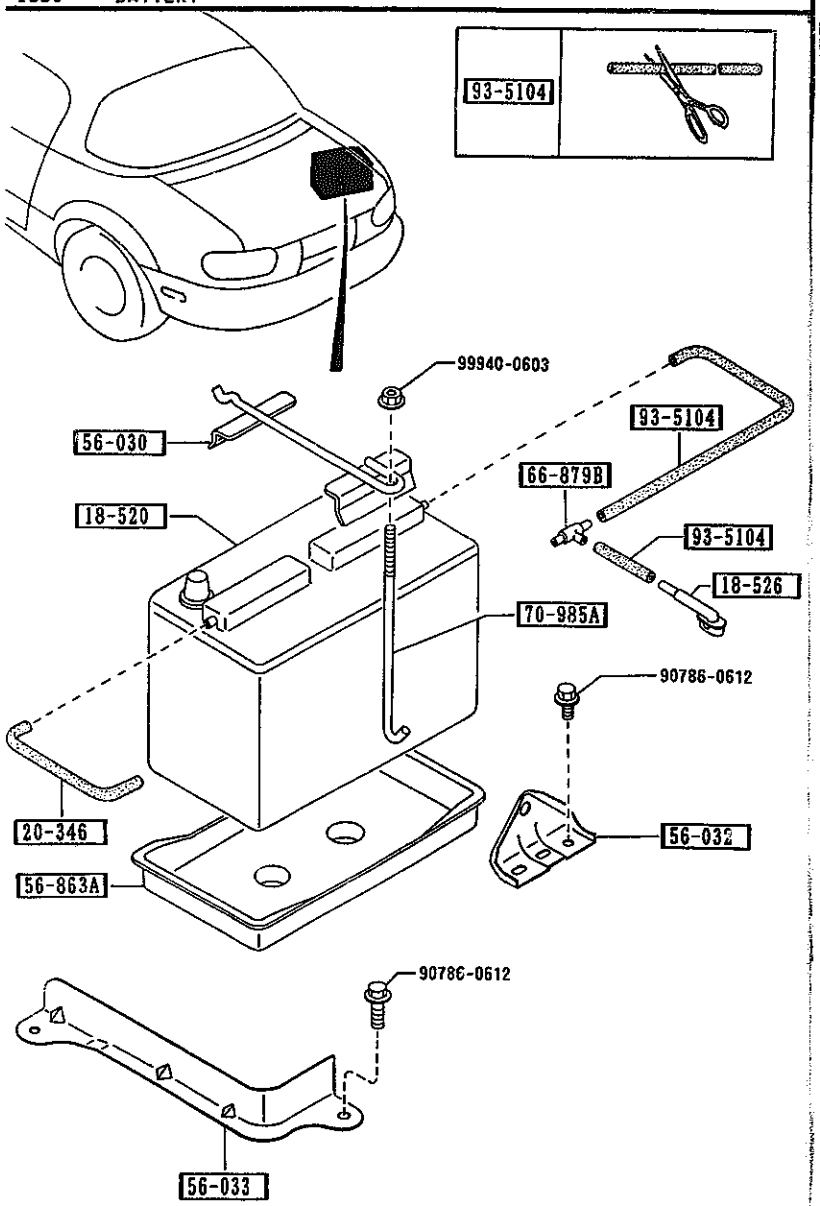

AUNA04

1850 -1 * BATTERY

PART NO.	QTY	MODEL/RESTRICTION	MODEL/RESTRICTION	MODEL/RESTRICTION	FROM-TO
18-520		BATTERY			
B6AC-18-520	1	S46A24L(S) PANASONIC			
18-526		CONNECTOR,TUBE-BATTERY			
B61P-18-526	1				
20-346		TUBE,VACUUM			
B61P-18-524	1				
56-030		CLAMP,BATTERY			
NA01-56-03XA	1				
56-032		BRACKET,BATTERY CLAMP			
NA01-56-032A	1				
56-033		BRACKET,STOPPER-BATTERY			
NA01-56-033A	1				
56-863A		TRAY,BATTERY			
B095-56-032	1				
66-879B		JOINT			
0813-66-879	1				
70-985A		BOLT,CLAMP			
0259-54-292A	1				
93-5104		HOSE			
99351-04999	1				

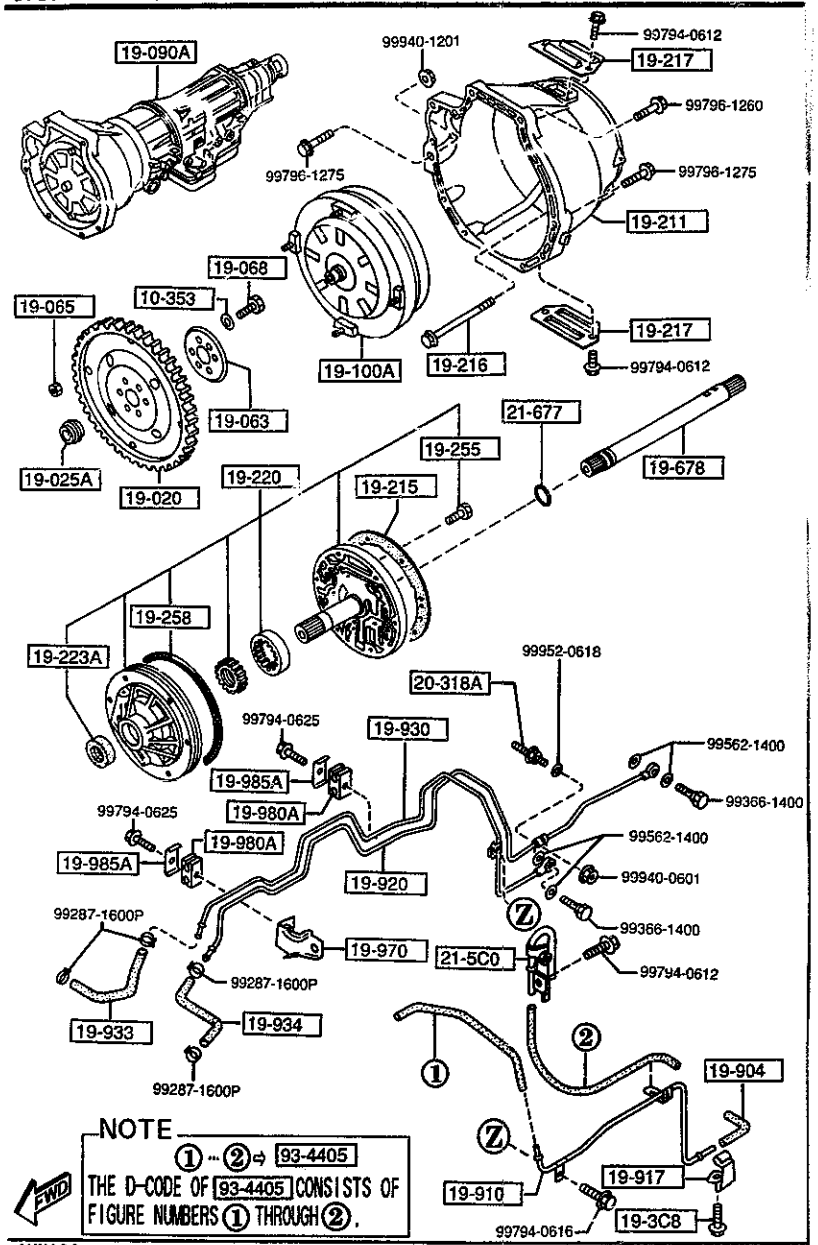

AUNA04

PART NO.	QTY	MODEL/RESTRICTION	MODEL/RESTRICTION	MODEL/RESTRICTION	FROM-TO
10-353		WASHER,PLAIN			
0290-10-353	6				
19-020		PLATE,DRIVE			
BU55-19-020	1				
19-025A		ADAPTER,DRIVE PLATE			
FU60-19-025	1				
19-063		PLATE,BACKING			
FT31-19-063	1				
19-065		NUT			
FU51-19-065	4				
19-068		BOLT,LOCK			
FT31-19-064	6				
19-090A		T/MISSION CPT.			
N451-19-090A A (N451-19-090B)	1				-3B04
N451-19-090B A (N451-19-090C)	1				3B04-4127
N451-19-090C	1				4127-
19-100A		CONVERTER,TORQUE			
BU55-19-100	1				
19-211		HOUSING,CONVERTER			
BU55-19-211	1				
19-215		GASKET,OIL PUMP			
BU46-19-215	1	NON ASBESTOS			
19-216		BOLT			
BU01-19-216	6				
19-217		COVER,BLIND			
BU55-19-217	2				

3B04 NA3***-506093
4127 NA3***-511188

CAT. AUNA04-03

1995-04

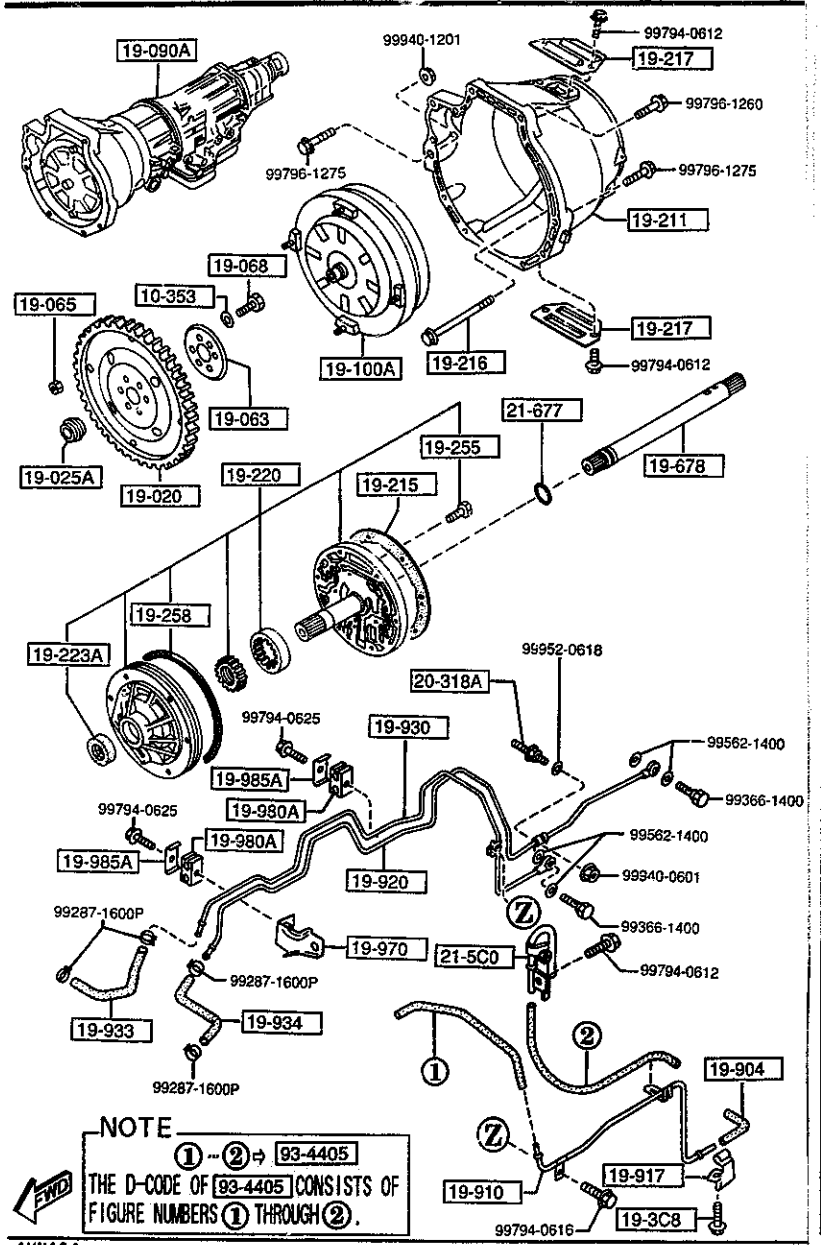

AUNA04

PART NO.	QTY	MODEL/RESTRICTION	MODEL/RESTRICTION	MODEL/RESTRICTION	FROM-TO
19-220		PUMP,OIL			
N451-19-220	1				
19-223A		SEAL,OIL			
0338-19-223A	1	NOK			
19-255		BOLT			
0338-19-255	5				
19-258		SEAL,CUT RING			
0338-19-258	1				
19-3C8		BOLT,BAFFLE PLATE			
BU55-19-3C8	1				
19-678		SHAFT,INPUT			
N451-21-678	1				
19-904		HOSE,VACUUM			
0338-19-904A	1				
19-910		PIPE,VACUUM			
BU55-19-910A	1				
19-917		CLIP			
0436-19-917	1				
19-920		PIPE,OIL			
N451-19-920	1				
19-930		PIPE,OIL			
N452-19-930	1				
19-933		HOSE,OIL			
BU55-19-933A	1				
19-934		HOSE,OIL			
BU55-19-934A	1				
19-970		BRACKET			

CAT. AUNA04-03

1995-04

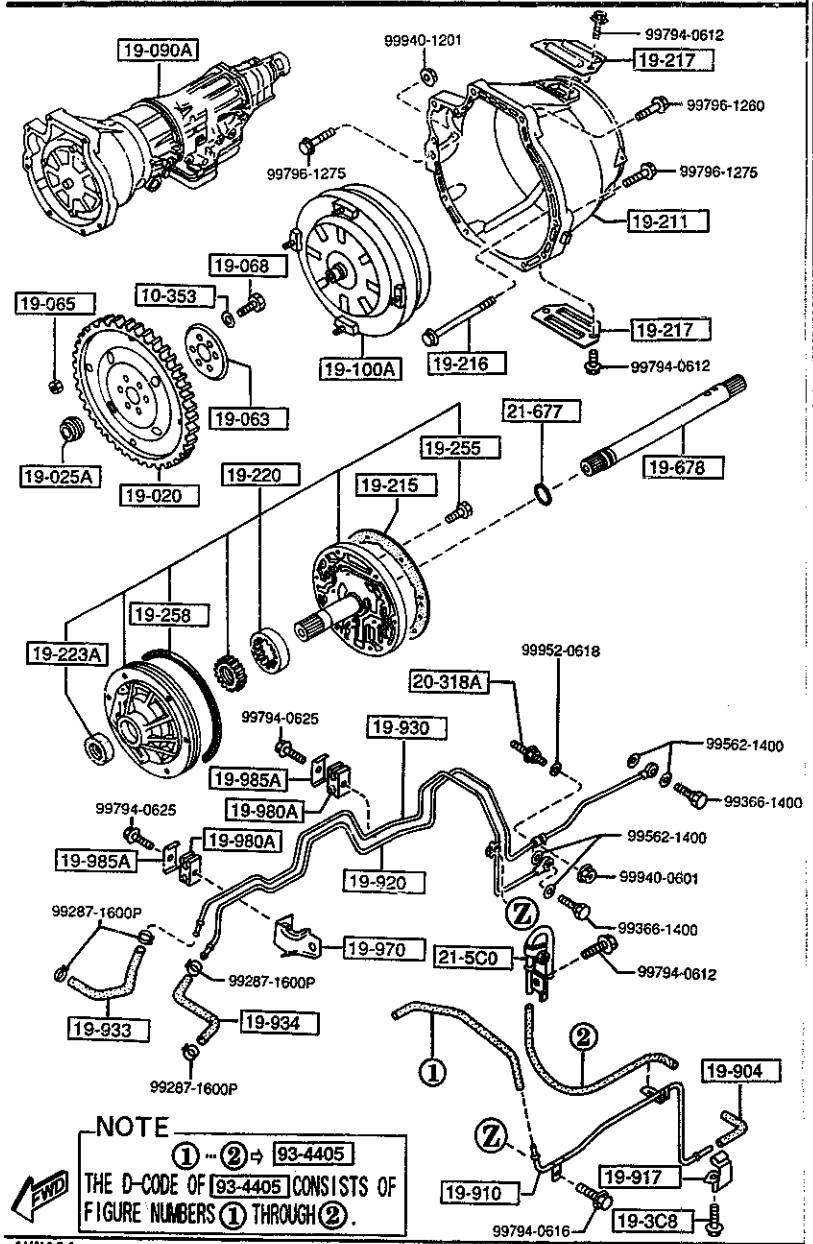

AUNA04

PART NO.	QTY	MODEL/RESTRICTION	MODEL/RESTRICTION	MODEL/RESTRICTION	FROM-TO
CONT'D					
BU55-19-970A	1				
19-980A		SUPPORT,OIL PIPE			
BU29-19-980	2				
19-985A		CLIP,OIL PIPE			
BU29-19-985	2				
20-318A		BOLT			
BU27-19-838	1				
21-5C0		BREATHER			
N451-21-5C0	1				
21-677		RING,'O'			
BU01-21-677	1				
93-4405		HOSE			
99344-05150	1				

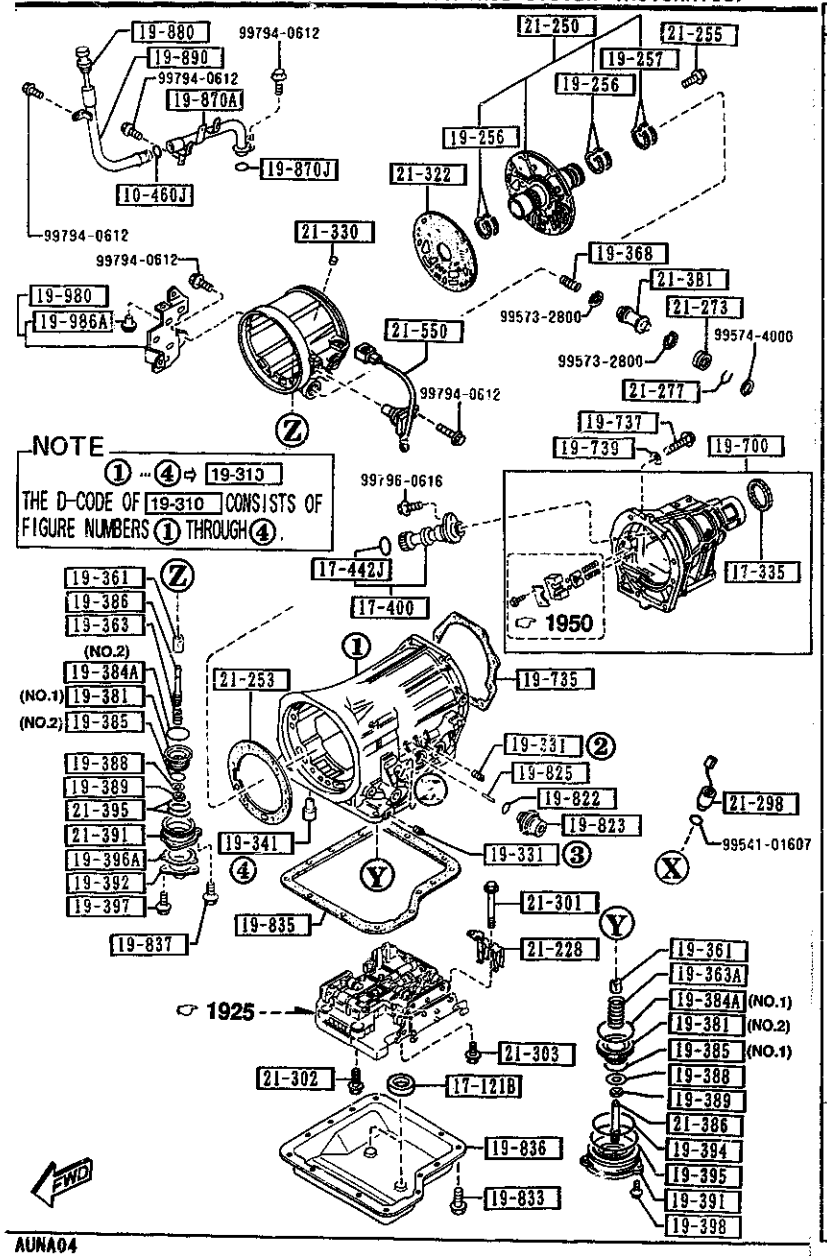

AUNA04

PART NO.	QTY	MODEL/RESTRICTION	MODEL/RESTRICTION	MODEL/RESTRICTION	FROM-TO
10-460J 99541-01201	1	RING,'O'			
17-121B F401-17-121	2	MAGNET			
17-335 M507-17-335A	1	SEAL,OIL			
17-400 N451-17-400	1	GEAR SET,DRIVEN-SPEED			
17-442J 1011-17-443	1	RING,'O'			
19-256 BU01-19-256	4	RING,SEAL			
19-257 BU01-19-257	2	RING,SEAL			
19-310 N451-19-310	1	CASE,T/MISSION			
19-331 0338-19-331A	2	PLUG,SQUARE HEAD			
19-341 0338-19-341	1	BOLT,ANCHOR END			
19-361 0338-19-361B	2	STRUT,BAND			
19-363 FT40-19-363	1	SPRING,PISTON RETURN			
19-363A BU10-19-363	1	SPRING,PISTON RETURN			
19-368 BU20-19-368	1	SPRING,CUSHION-PSTN.STEM			

CAT. AUNA04-03

1995-04

1920 TRANSMISSION CASE & MAIN CONTROL SYSTEM (AUTOMATIC)

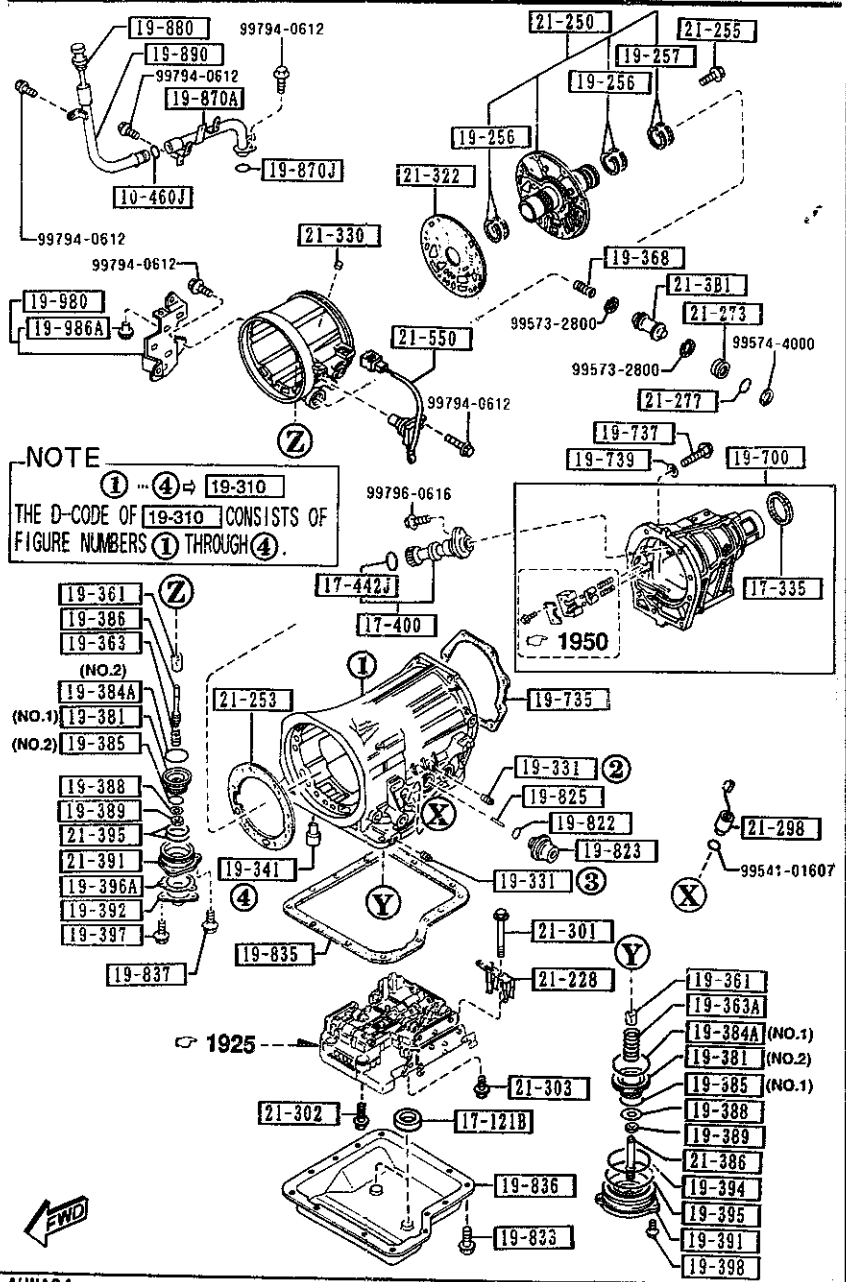

AUNA04

PART NO.	QTY	MODEL/RESTRICTION	MODEL/RESTRICTION	MODEL/RESTRICTION	FROM-TO
19-381		PISTON,BAND SERVO			
BV03-19-381	1	(ILLUST. NO.1)			
N451-19-381	1	(ILLUST. NO.2)			
19-384A		SEAL,PISTON			
BU10-19-384	1	(ILLUST. NO.1)			
BU55-19-384	1	(ILLUST. NO.2)			
19-385		SEAL,PISTON			
BU05-19-385	1	D=49.4MM (ILLUST. NO.1)			
0842-19-385	1	D=36MM (ILLUST. NO.2)			
19-386		STEM,PISTON			
0338-19-386A	1				
19-388		WASHER,PLAIN			
0338-19-388A	2				
19-389		NUT			
0338-19-389	2				
19-391		RETAINER,SERVO			
N451-19-391	1				
19-392		COVER,SERVO			
1758-19-392A	1				
19-394		SEAL,LATHE CUT			
0842-19-394	1				
19-395		RING,'O'			
0338-19-395	1				
19-396A		GASKET			
BU46-19-3J4	1	NON ASBESTOS			
19-397		BOLT			
1758-19-397	3				

CAT. AUNA04-03

1995-04

1920 TRANSMISSION CASE & MAIN CONTROL SYSTEM (AUTOMATIC)

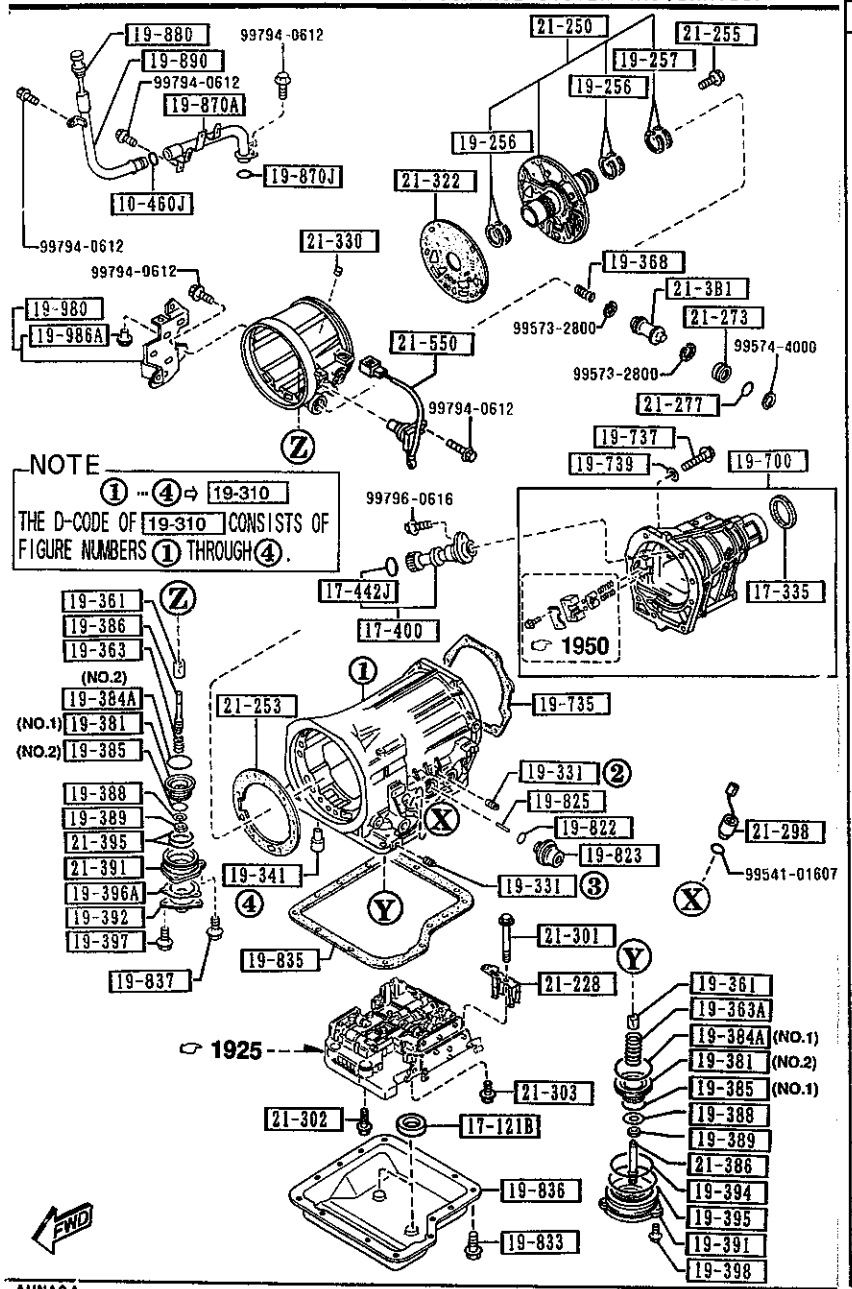

AUNA04

PART NO.	QTY	MODEL/RESTRICTION	MODEL/RESTRICTION	MODEL/RESTRICTION	FROM-TO
19-398 0338-19-398	3	BOLT			
19-700 BUY2-19-7A0	1	HOUSING,EXTENSION			
19-735 BT28-19-735	1	GASKET,EXTENSION NON ASBESTOS			
19-737 BV12-19-737	8	BOLT			
19-739 BV40-19-739	8	WASHER,PLAIN			
19-822 0338-19-822	1	SEAL,'O'RING			
19-823 BT07-19-823	1	DIAPHRAGM,VACUUM			
19-825 BU55-19-825	1	ROD,DIAPHRAGM L=29.75MM			
0338-19-825	1	L=30MM			
0338-19-826	1	L=31MM			
0338-19-827	1	L=30.5MM			
0338-19-828	1	L=29MM			
0338-19-829	1	L=29.5MM			
19-833 BU91-19-833	13	BOLT,CONTROL VALVE			
19-835 BT28-19-835	1	GASKET,OIL PAN NON ASBESTOS			

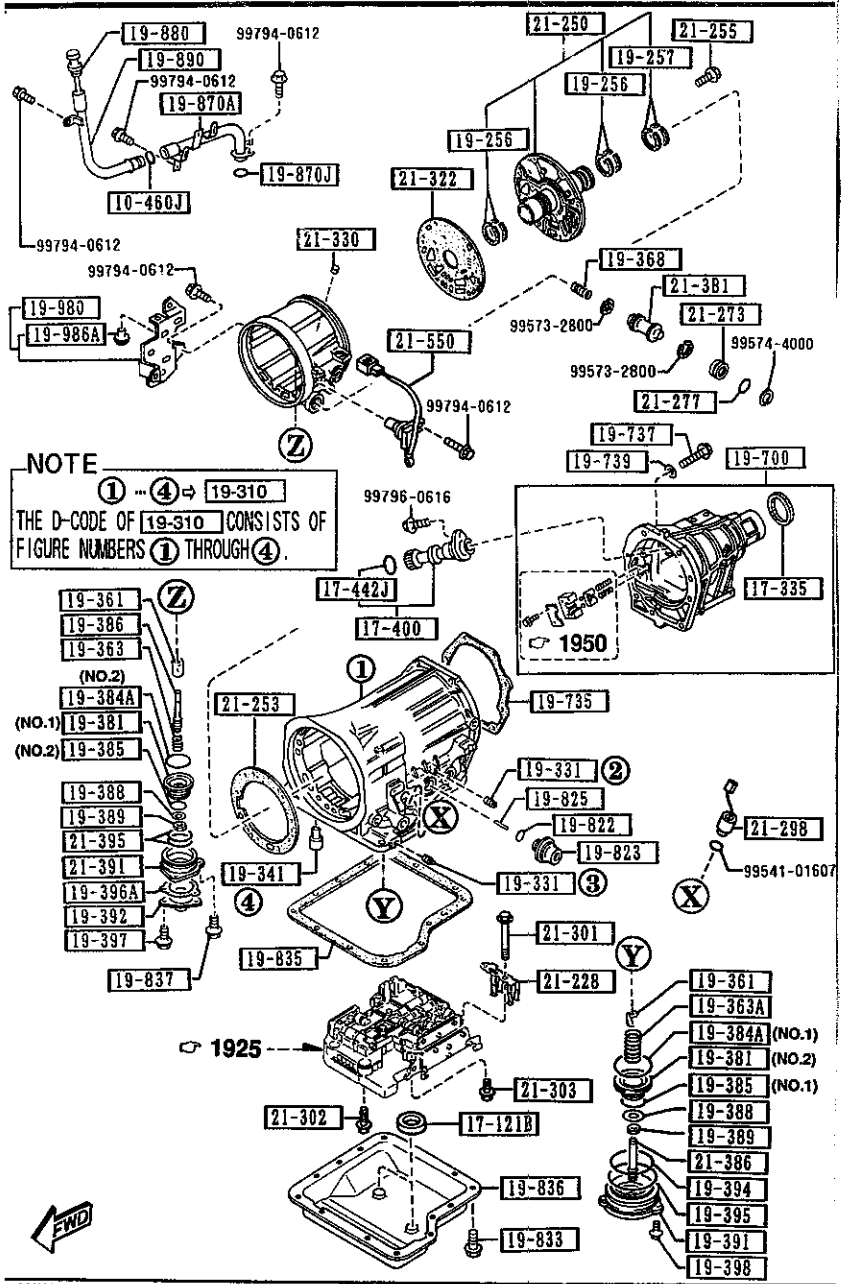

AUNA04

PART NO.	QTY	MODEL/RESTRICTION	MODEL/RESTRICTION	MODEL/RESTRICTION	FROM-TO
19-836		PAN,OIL			
BV02-19-836	1				
19-837		BOLT,OIL PAN			
0338-19-837	3				
19-870A		TUBE,FILLER			
BU55-19-870	1				
19-870J		RING,'O'			
99541-01601	1				
19-880		GAUGE,OIL LEVEL			
BV55-19-880A	1				
19-890		TUBE,OIL FILTER-UPPER			
BU55-19-890	1				
19-980		BRACKET			
BU55-19-980A	1				
19-986A		BUSH,RUBBER			
BV01-19-986	1				
21-228		HOLDER,SOCKET			
BV01-21-228A	1				
21-250		SUPPORT,DRUM			
BV01-21-250A	1				
21-253		GASKET,DRUM SUPPORT			
BU46-21-2F3	1	NON ASBESTOS			
21-255		BOLT			
BU01-21-255	5				
21-273		PLUG,ACCUMULATOR			
BU01-21-273	1				
21-277		RING,'O'			

CAT. AUNA04-03

1995-04

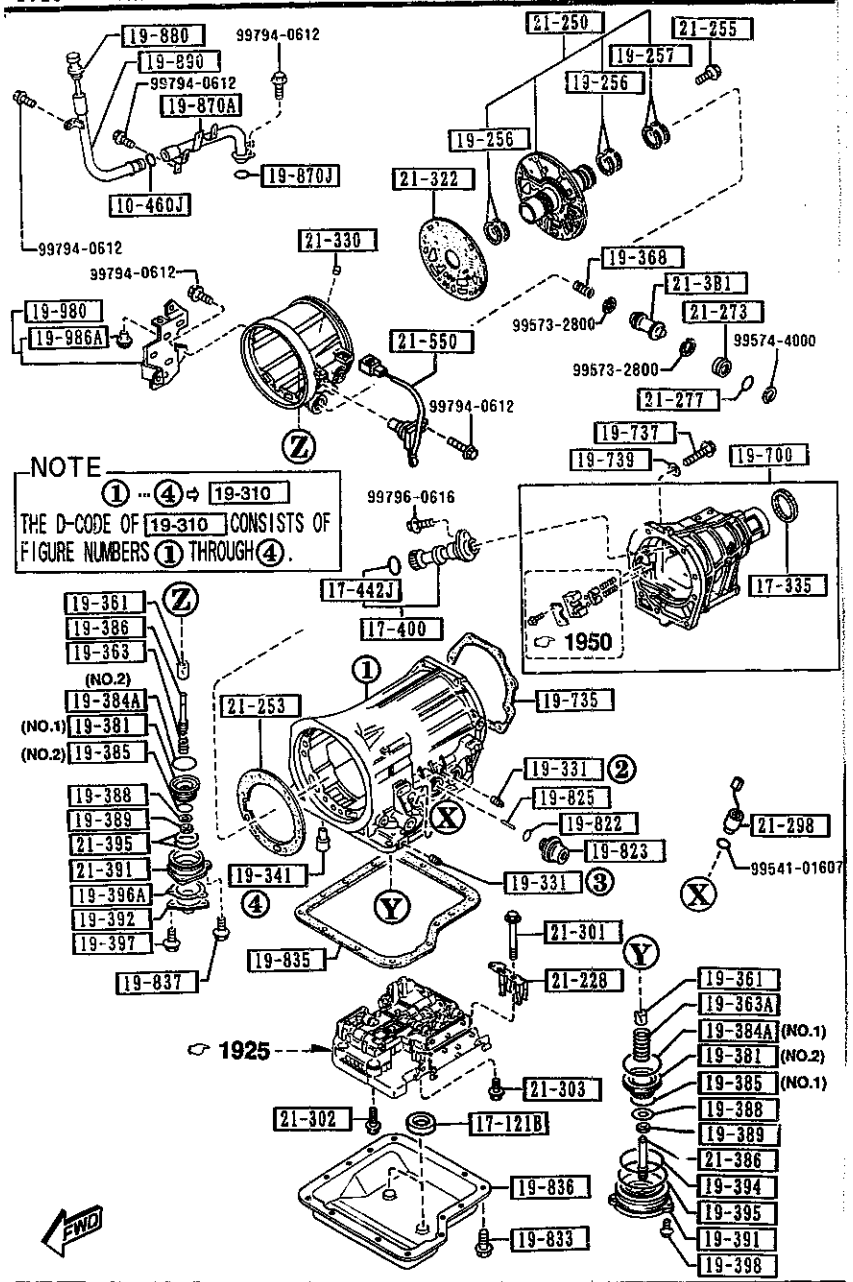

PART NO.	QTY	MODEL/RESTRICTION	MODEL/RESTRICTION	MODEL/RESTRICTION	FROM-TO
CONT'D					
BU01-21-277	1				
+---------+					
| 21-298 |		COUPLER,SOLENOID VALVE			
+---------+					
BV09-21-2K0	1				
+---------+					
| 21-3B1 |		PISTON,ACCUMULATOR			
+---------+					
N451-21-3B1	1				
+---------+					
| 21-301 |		BOLT,CONTROL VALVE			
+---------+					
BV01-21-301	2				
+---------+					
| 21-302 |		BOLT,CONTROL VALVE			
+---------+					
BV01-21-302	4				
+---------+					
| 21-303 |		BOLT,CONTROL VALVE			
+---------+					
BV01-21-303	1				
+---------+					
| 21-322 |		GASKET,O/DRIVE CASE			
+---------+					
BU46-21-3C2	1				
+---------+					
| 21-330 |		VALVE,ONE WAY			
+---------+					
BV01-21-330	1				
+---------+					
| 21-386 |		STEM,PISTON BAND			
+---------+					
BU01-21-386	1				
+---------+					
| 21-391 |		RETAINER,SERVO			
+---------+					
BV02-21-391	1				
+---------+					
| 21-395 |		RING,'O'			
+---------+					
BU01-21-395	2				
+---------+					
| 21-550 |		GENERATOR,PULSE			
+---------+					
N451-21-550A	1				

NOTE
① ··· ② ⇨ 19-750
THE D-CODE OF 19-750 CONSISTS OF FIGURE NUMBERS ① THROUGH ②.

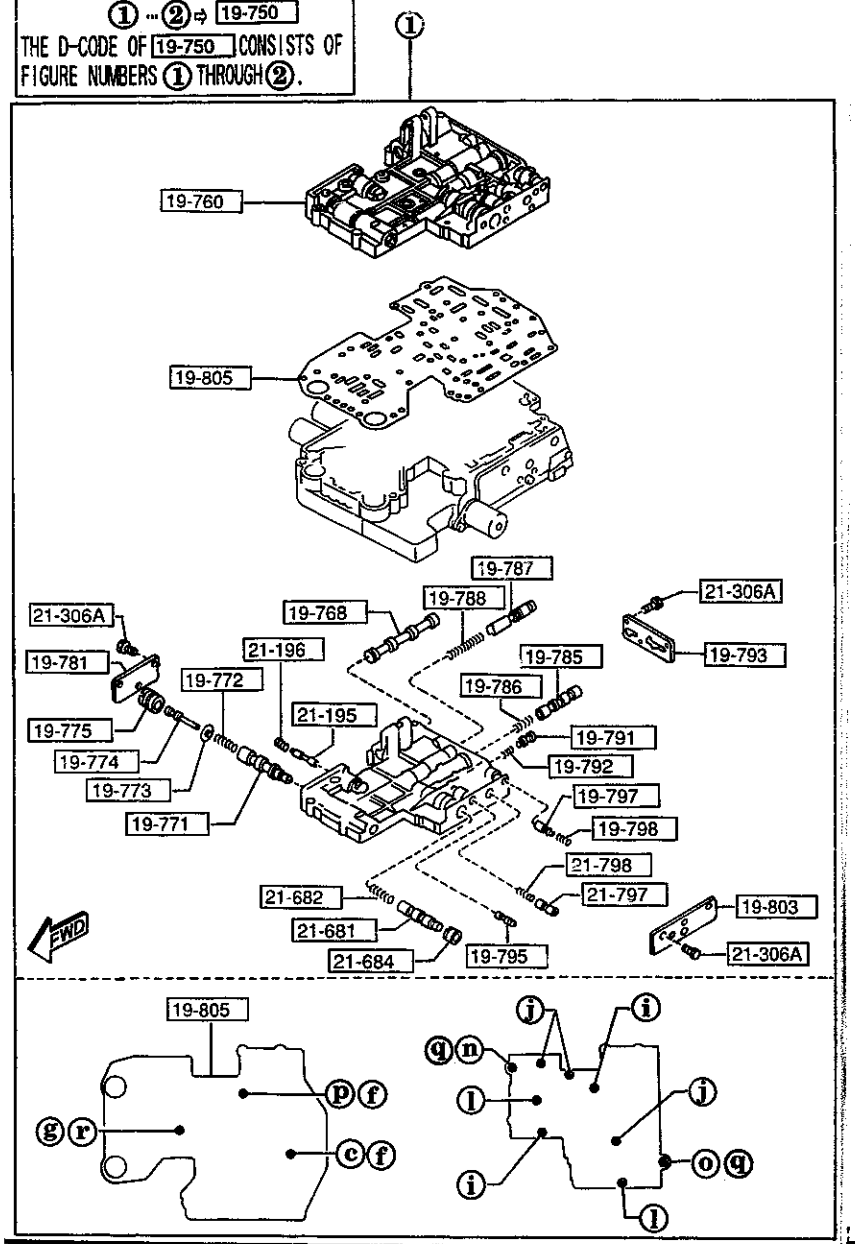

AUNA04

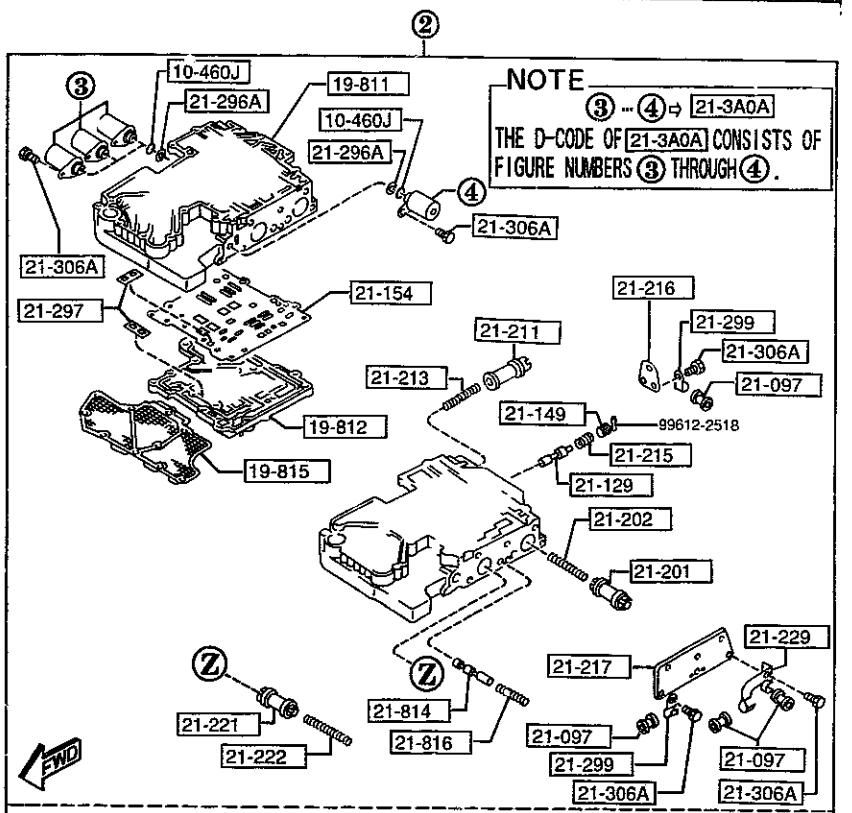

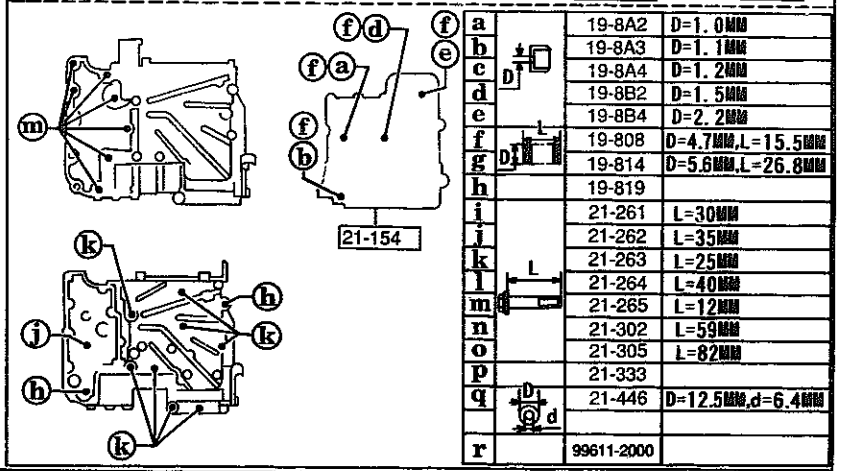

a		19-8A2	D=1.0mm
b		19-8A3	D=1.1mm
c		19-8A4	D=1.2mm
d		19-8B2	D=1.5mm
e		19-8B4	D=2.2mm
f		19-808	D=4.7mm,L=15.5mm
g		19-814	D=5.6mm,L=26.8mm
h		19-819	
i		21-261	L=30mm
j		21-262	L=35mm
k		21-263	L=25mm
l		21-264	L=40mm
m		21-265	L=12mm
n		21-302	L=59mm
o		21-305	L=82mm
p		21-333	
q		21-446	D=12.5mm,d=6.4mm
r		99611-2000	

AUNA04

NOTE
① ··· ② ⇨ 19-750
THE D-CODE OF 19-750 CONSISTS OF FIGURE NUMBERS ① THROUGH ②.

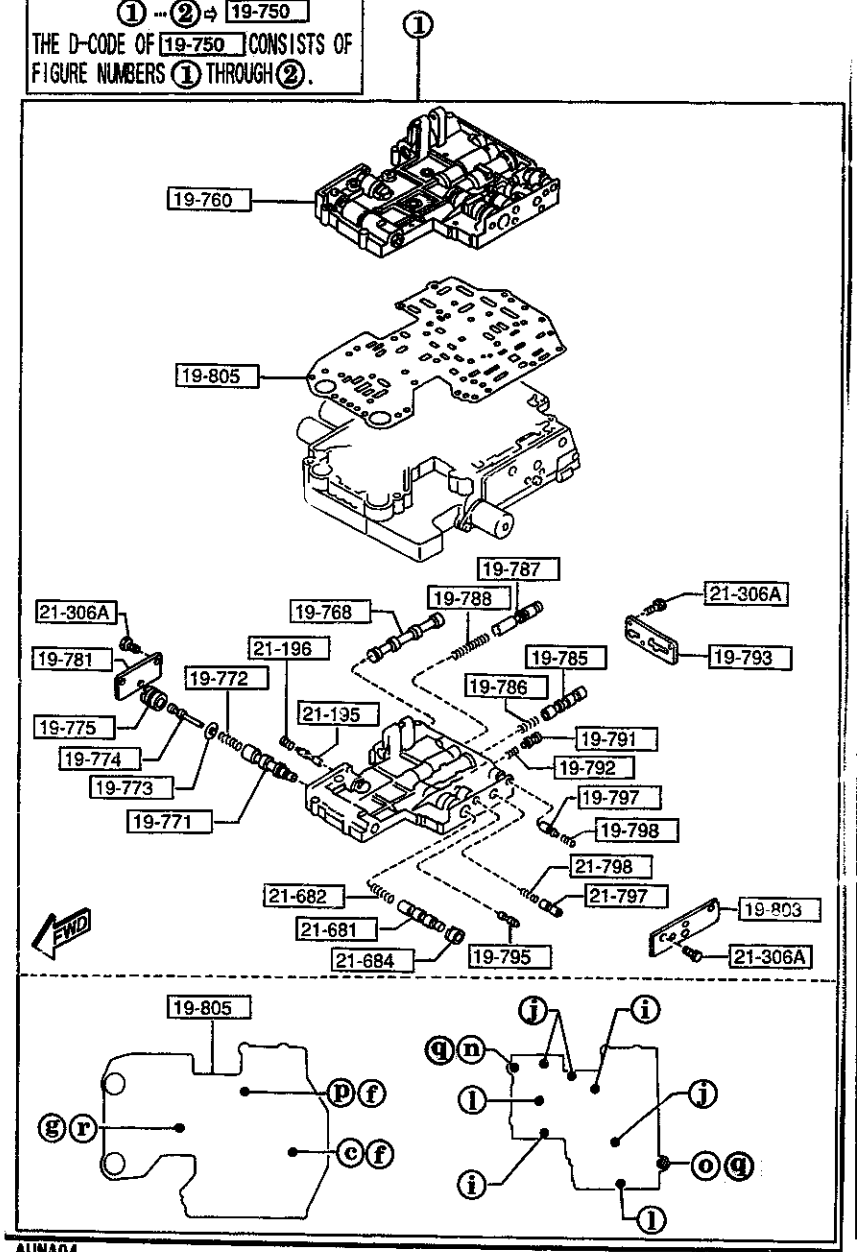

AUNA04

PART NO.	QTY	MODEL/RESTRICTION	MODEL/RESTRICTION	MODEL/RESTRICTION	FROM-TO
10-460J 99541-00707	4	RING,'O'			
19-750 N451-19-750	1	VALVE,CONTROL			
19-760 BV01-19-760F	1	BODY,CONTROL VALVE-UP			
19-768 BU91-19-768	1	VALVE,MANUAL			
19-771 BV01-19-771	1	VALVE,REGULATOR			
19-772 0338-19-772	1	SPRING,REGULATOR			
19-773 0338-19-773	1	SEAT,REGULATOR SPRING			
19-774 N451-19-774	1	PLUG,REGULATOR			
19-775 N451-19-775	1	SLEEVE,REGULATOR PLUG			
19-781 1758-19-781	1	PLATE,SIDE'D'			
19-785 BV01-19-785	1	VALVE,1-2 SHIFT			
19-786 BV11-19-527	1	SPRING,1-2 SHIFT			
19-787 N451-19-787	1	VALVE,2-3 SHIFT			
19-788 N451-19-788	1	SPRING,2-3 SHIFT			

CAT. AUNA04-03

1995-04

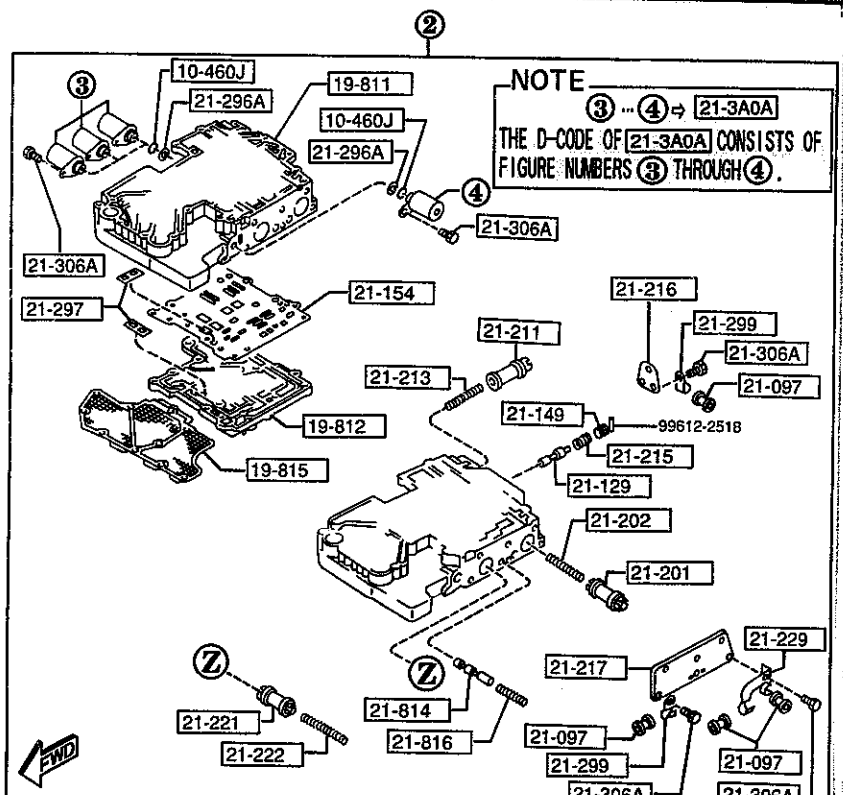

a	D	19-8A2	D=1.0MM
b	D	19-8A3	D=1.1MM
c	D	19-8A4	D=1.2MM
d	D	19-8B2	D=1.5MM
e	D	19-8B4	D=2.2MM
f	D L	19-808	D=4.7MM,L=15.5MM
g	D L	19-814	D=5.6MM,L=26.8MM
h		19-819	
i	L	21-261	L=30MM
j	L	21-262	L=35MM
k	L	21-263	L=25MM
l	L	21-264	L=40MM
m	L	21-265	L=12MM
n	L	21-302	L=59MM
o	L	21-305	L=82MM
p		21-333	
q	D d	21-446	D=12.5MM,d=6.4MM
r		99611-2000	

AUNA04

PART NO.	QTY	MODEL/RESTRICTION	MODEL/RESTRICTION	MODEL/RESTRICTION	FROM-TO
19-791		VALVE,MODIFIER			
0338-19-791A	1				
19-792		SPRING,MODIFIER			
BV01-19-792	1				
19-793		PLATE,SIDE'A'			
BV01-19-793	1				
19-795		VALVE,THROTTLE			
N451-19-795	1				
19-797		VALVE,THROTTLE BACK-UP			
BV01-19-797A	1				
19-798		SPRING,THROTTLE BACK-UP			
N451-19-798	1				
19-8A2		VALVE,ORIFICE CHECK			
BV01-19-8A2	1				
19-8A3		VALVE,ORIFICE CHECK			
BV01-19-8A3	1				
19-8A4		VALVE,ORIFICE CHECK			
BV01-19-8A4	1				
19-8B2		VALVE,ORIFICE CHECK			
BV01-19-8B2	1				
19-8B4		VALVE,ORIFICE CHECK			
BV01-19-8B4	1				
19-803		PLATE,SIDE'B'			
BV01-19-803	1				
19-805		PLATE,SEPARATOR			
BV17-19-805	1				
19-808		SPRING			
0338-19-808	6				

NOTE
① ... ② ⇨ 19-750
THE D-CODE OF 19-750 CONSISTS OF FIGURE NUMBERS ① THROUGH ②.

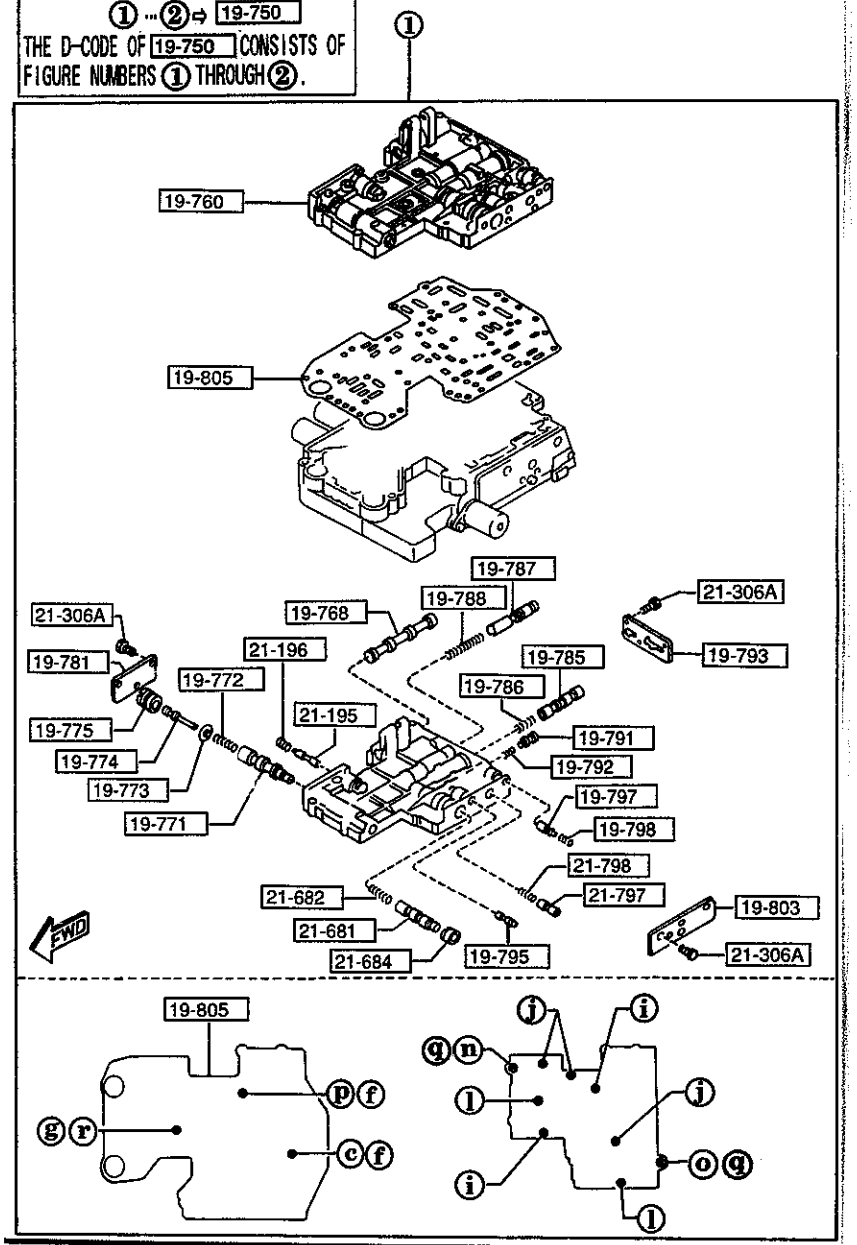

AUNA04

PART NO.	QTY	MODEL/RESTRICTION	MODEL/RESTRICTION	MODEL/RESTRICTION	FROM-TO
19-811		BODY,VALVE LWR			
BV01-19-811C	1				-4201
BV02-19-811C	1				4201-
19-812		COVER,VALVE BODY			
BV01-19-812A	1				
19-814		SPRING			
0338-19-814	1				
19-815		STRAINER,OIL			
BV01-19-815	1				
19-819		NUT			
BV01-19-819	2				
21-097		PROTECTOR			
FU01-21-097	4				
21-129		VALVE,1-2 REDUCING			
BV01-21-129	1				
21-149		PLUG,STOPPER			
BV01-21-149A	1				
21-154		PLATE,SEPARATOR			
N451-21-154	1				
21-195		VALVE,REDUCING			
BV01-21-195	1				
21-196		SPRING,REDUCING			
BV01-21-196	1				
21-201		PISTON,ACCUM			
N451-21-201	1				
21-202		SPRING,ACCUM N-R			
BV06-21-202	1				

4201 NA3***-511601

CAT. AUNA04-03 1995-04

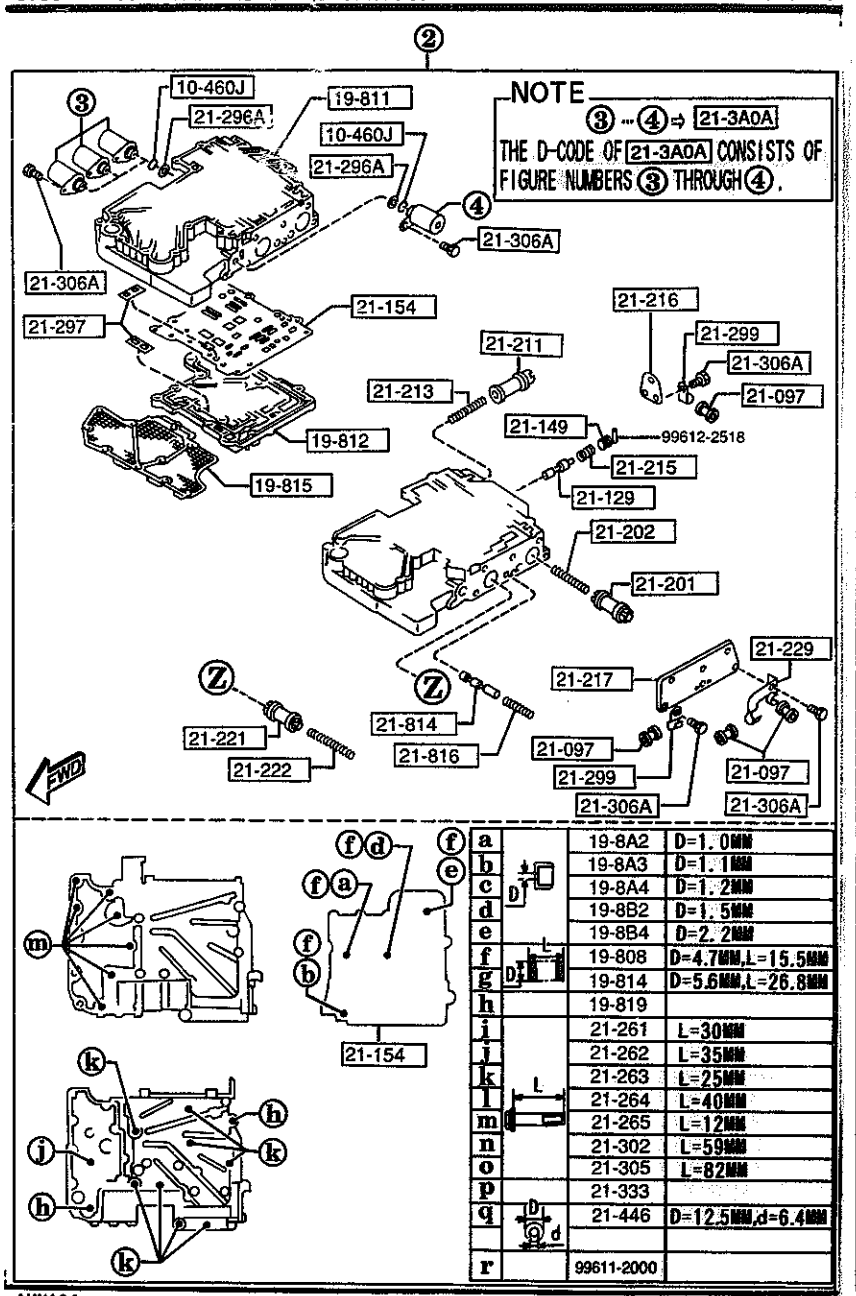

a	D	19-8A2	D=1.0MM
b	D	19-8A3	D=1.1MM
c	D	19-8A4	D=1.2MM
d	D	19-8B2	D=1.5MM
e	D	19-8B4	D=2.2MM
f	D, L	19-808	D=4.7MM,L=15.5MM
g	D, L	19-814	D=5.6MM,L=26.8MM
h		19-819	
i	L	21-261	L=30MM
j	L	21-262	L=35MM
k	L	21-263	L=25MM
l	L	21-264	L=40MM
m	L	21-265	L=12MM
n	L	21-302	L=59MM
o	L	21-305	L=82MM
p		21-333	
q	D, d	21-446	D=12.5MM,d=6.4MM
r		99611-2000	

AUNA04

PART NO.	QTY	MODEL/RESTRICTION	MODEL/RESTRICTION	MODEL/RESTRICTION	FROM-TO
21-211		PISTON,N/D ACCUM			
N451-21-211	1				
21-213		SPRING,N/D ACCUM			
BV01-21-213	1				
21-215		SPRING,BY-PASS			
BV02-21-215	1				
21-216		PLATE'E',SIDE			
BV01-21-216	1				
21-217		PLATE'F',SIDE			
BV01-21-217	1				
21-221		PISTON,1/2 ACCUM			
N451-21-221	1				
21-222		SPRING,ACCUM 1-2			
BV02-21-222B	1				
21-229		CLIP			
BV01-21-229A	1				
21-261		BOLT			
N451-21-261	2				
21-262		BOLT			
N451-21-262	4				
21-263		BOLT			
N451-21-263	8				
21-264		BOLT			
N451-21-264	2				
21-265		BOLT			
FU01-21-265C	7				
21-296A		STRAINER,OIL			
BV01-21-296	4				

CAT. AUNA04-03 1995-04

NOTE
① - ② ⇨ 19-750
THE D-CODE OF 19-750 CONSISTS OF FIGURE NUMBERS ① THROUGH ②.

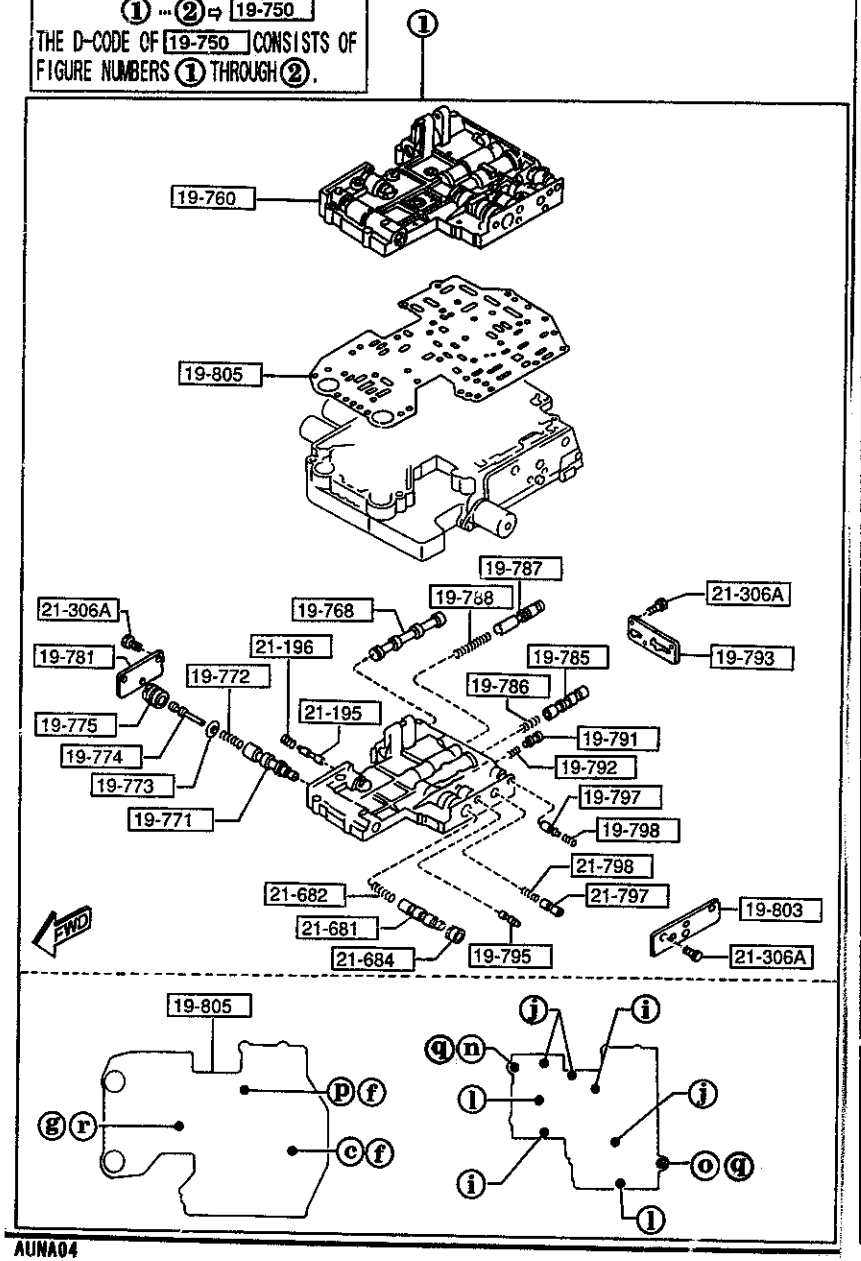

AUNA04

PART NO.	QTY	MODEL/RESTRICTION	MODEL/RESTRICTION	MODEL/RESTRICTION	FROM-TO
21-297 BV01-21-297	2	STRAINER,INNER			
21-299 BV01-21-299	2	CLIP			
21-3A0A BV01-21-3A0A	1	VALVE,SOLENOID NO1			
21-302 BV02-21-302	1	BOLT,CONTROL VALVE			
21-305 BV01-21-305B	1	BOLT			
21-306A BV01-21-306	22	BOLT			
21-333 BV01-21-333	1	VALVE,ONE WAY			
21-446 BV01-21-446	2	WASHER,DISHED			
21-681 BV01-21-681	1	VALVE,SHIFT 3-4			
21-682 BV01-21-682	1	SPRING,3-4 SHIFT			
21-684 BV01-21-684	1	VALVE,3-4 SHIFT-COAST			
21-797 BV01-21-797	1	VALVE,CONTROL BACK UP			
21-798 BV01-21-798	1	SPRING,BACK UP			
21-814 BV01-21-814	1	SPRING,3-2 TIMING			

CAT. AUNA04-03

1995-04

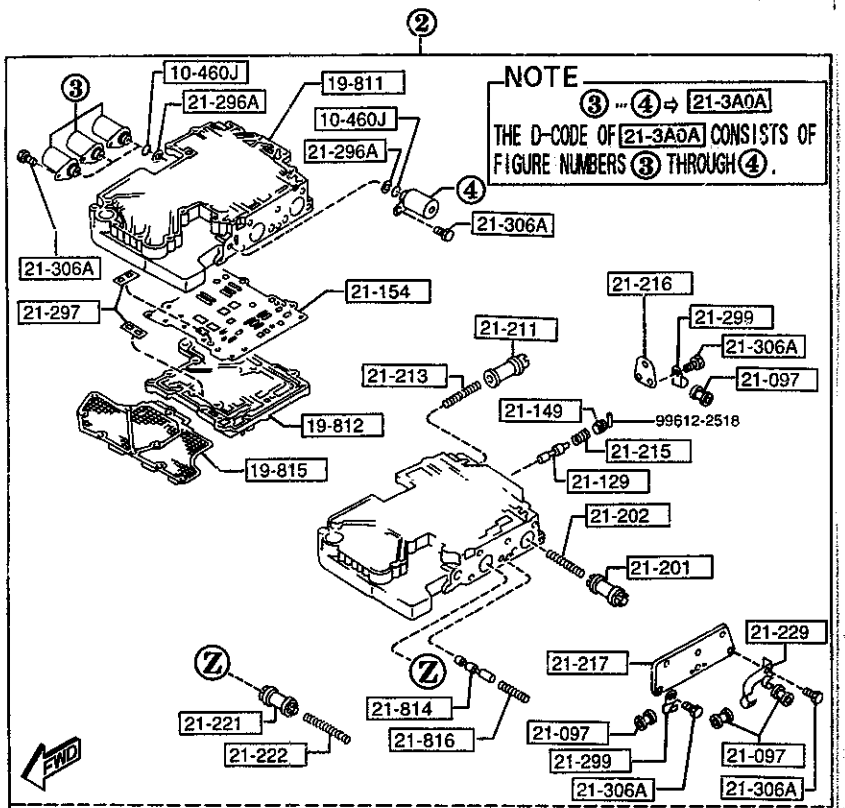

a		19-8A2	D=1.0MM
b		19-8A3	D=1.1MM
c		19-8A4	D=1.2MM
d		19-8B2	D=1.5MM
e		19-8B4	D=2.2MM
f		19-808	D=4.7MM,L=15.5MM
g		19-814	D=5.6MM,L=26.8MM
h		19-819	
i		21-261	L=30MM
j		21-262	L=35MM
k		21-263	L=25MM
l		21-264	L=40MM
m		21-265	L=12MM
n		21-302	L=59MM
o		21-305	L=82MM
p		21-333	
q		21-446	D=12.5MM,d=6.4MM
r		99611-2000	

AUNA04

PART NO.	QTY	MODEL/RESTRICTION	MODEL/RESTRICTION	MODEL/RESTRICTION	FROM-TO
21-816		SPRING,3-2 TIMING			
BV01-21-816	1				

CAT. AUNA04-03 1995-04

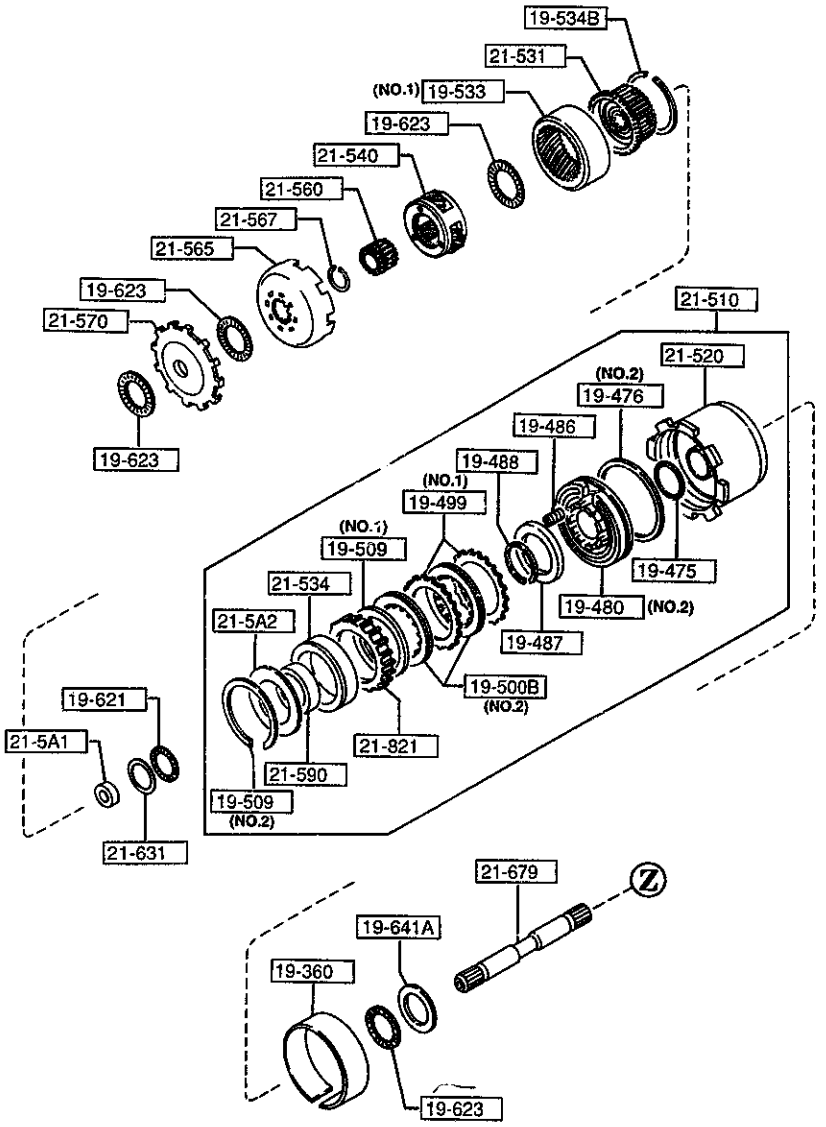
19-534B
21-531
(NO.1) 19-533
19-623
21-540
21-560
21-567
21-565
19-623
21-570
19-623
21-510
21-520
(NO.2) 19-476
19-486
19-488
(NO.1) 19-499
(NO.1) 19-509
21-534
21-5A2
19-475
19-480 (NO.2)
19-487
19-500B (NO.2)
21-821
21-590
19-509 (NO.2)
19-621
21-5A1
21-631
21-679
19-641A
19-360
19-623
FWD
AUNA04

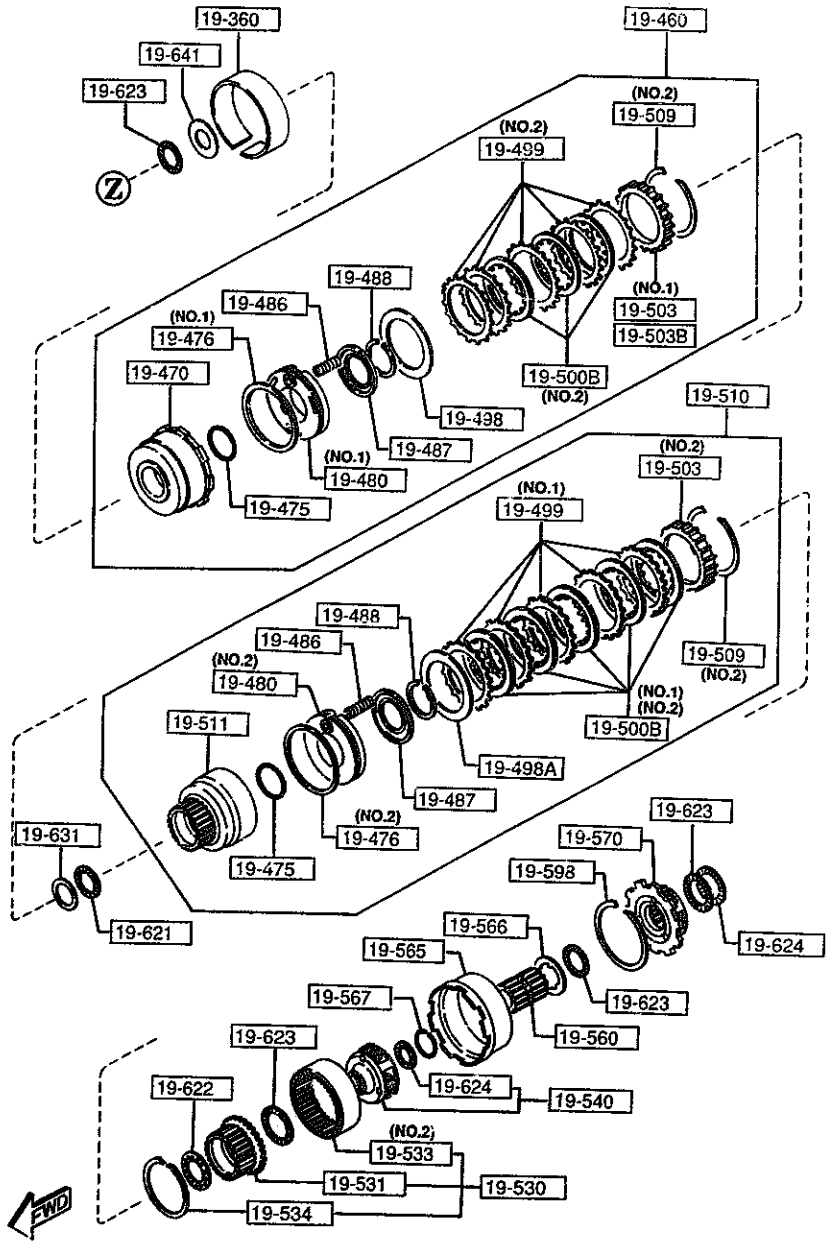
19-360
19-641
19-623
19-460
(NO.2) 19-509
(NO.2) 19-499
19-488
19-486
(NO.1) 19-476
19-470
19-498
19-487
(NO.1) 19-480
19-475
(NO.1) 19-503
19-503B
19-500B (NO.2)
19-510
(NO.2) 19-503
(NO.1) 19-499
19-488
19-486
(NO.2) 19-480
19-511
19-498A
19-487
(NO.2) 19-476
19-475
19-509 (NO.2)
(NO.1) (NO.2) 19-500B
19-631
19-621
19-623
19-570
19-598
19-624
19-566
19-565
19-623
19-567
19-560
19-623
19-624
19-540
19-622
(NO.2) 19-533
19-531
19-530
19-534
FWD
AUNA04

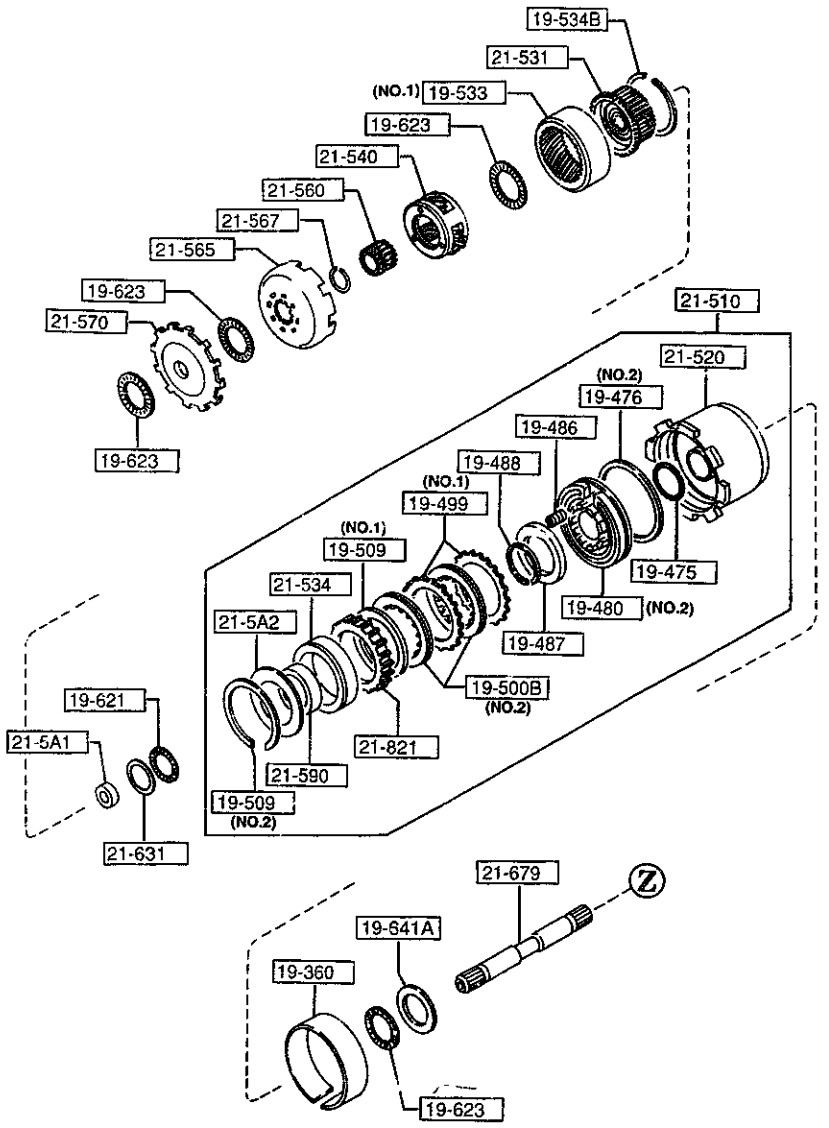

AUNA04

PART NO.	QTY	MODEL/RESTRICTION	MODEL/RESTRICTION	MODEL/RESTRICTION	FROM-TO
19-360		BAND,BRAKE			
0338-19-360B	2				
19-460		CLUTCH,FRONT			
N451-19-460	1				
19-470		DRUM,CLUTCH			
N451-19-470	1				
19-475		SEAL,'O'RING			
0338-19-475	3				
19-476		SEAL,LATHE CUT			
BV01-19-476	1	(ILLUST. NO.1)			
0338-19-476	2	(ILLUST. NO.2)			
19-480		PISTON,CLUTCH			
BV01-19-480	1	(ILLUST. NO.1)			
0338-19-480	2	(ILLUST. NO.2)			
19-486		SPRING,PISTON RETURN			
0338-19-486	25				
19-487		RETAINER,SPRING			
0338-19-487	3				
19-488		RING,SNAP			
0338-19-488	3				
19-498		PLATE,DISHED			
0338-19-498	1				
19-498A		PLATE,DISHED			
BU17-19-498	1				
19-499		PLATE,DRIVEN			
FT01-19-499	7	(ILLUST. NO.1)			
0338-19-499	5	(ILLUST. NO.2)			
19-500B		PLATE,DRIVEN			

CAT. AUNA04-03

1995-04

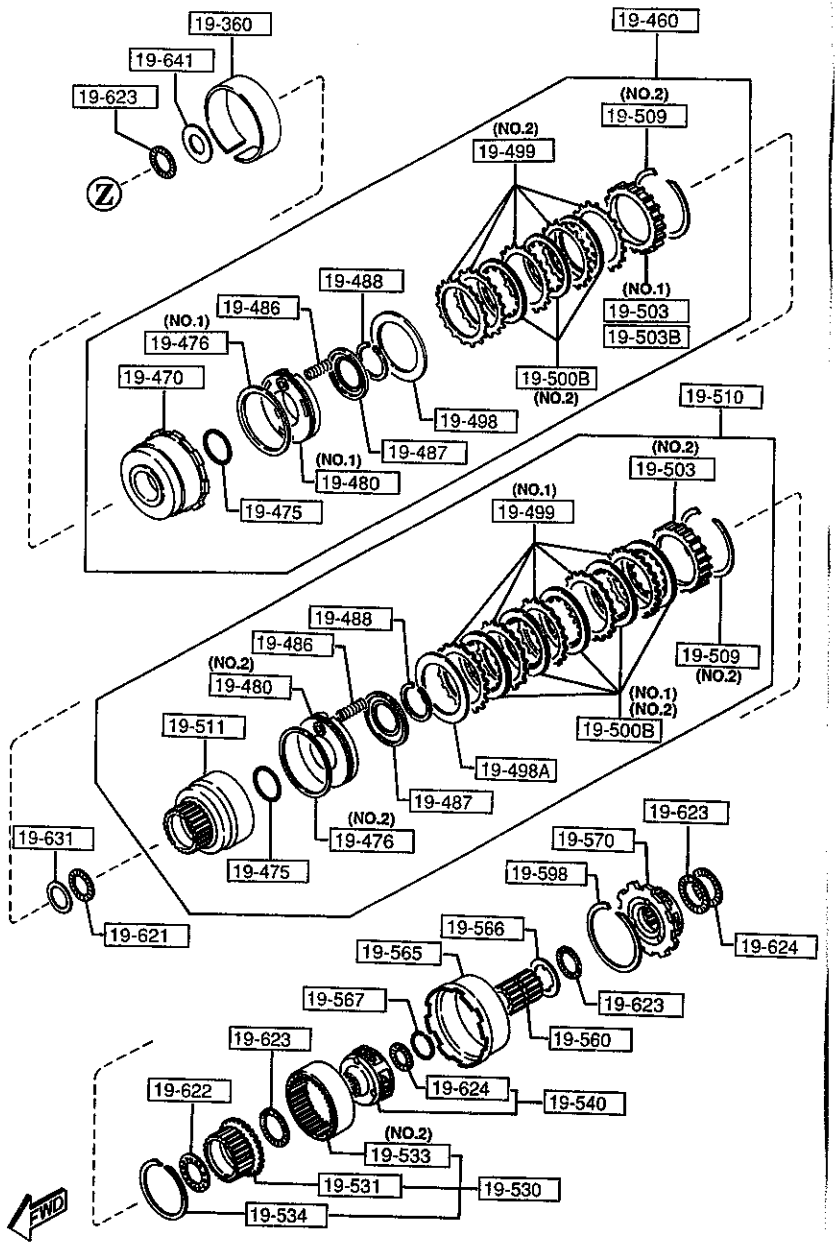

AUNA04

PART NO.	QTY	MODEL/RESTRICTION	MODEL/RESTRICTION	MODEL/RESTRICTION	FROM-TO
CONT'D					
BU55-19-5J0	5	(ILLUST. NO.1)			
BU17-19-500A	10	(ILLUST. NO.2)			
+---------+					
| 19-503 |		PLATE,RETAINING			
+---------+					
0338-19-503	1	T=10.2MM (ILLUST. NO.2)			
BU17-19-504	1	T=9.4MM (ILLUST. NO.2)			
BU17-19-505	1	T=9.6MM (ILLUST. NO.2)			
N451-19-505	1	T=6.4MM (ILLUST. NO.1)			
BU17-19-506	1	T=9.8MM (ILLUST. NO.2)			
BU17-19-507	1	T=10MM (ILLUST. NO.2)			
3959-19-507	1	T=5.8MM (ILLUST. NO.1)			
BU17-19-508	1	T=10.2MM (ILLUST. NO.2)			
3959-19-508	1	T=6MM (ILLUST. NO.1)			
BU17-19-509	1	T=10.4MM (ILLUST. NO.2)			
3959-19-509	1	T=6.2MM (ILLUST. NO.1)			
+---------+					
| 19-503B |		PLATE,RETAINING			
+---------+					
BV02-19-506	1	T=6.6MM			
BV02-19-507	1	T=6.8MM			
BV02-19-508	1	T=7MM			
+---------+					
| 19-509 |		RING,SNAP			
+---------+					
BV01-19-509	1	(ILLUST. NO.1)			
0338-19-509	3	(ILLUST. NO.2)			
+---------+					
| 19-510 |		CLUTCH,REAR			
+---------+					
BU17-19-510A	1				
+---------+					
| 19-511 |		DRUM,REAR CLUTCH			
+---------+					
1758-19-511A	1				

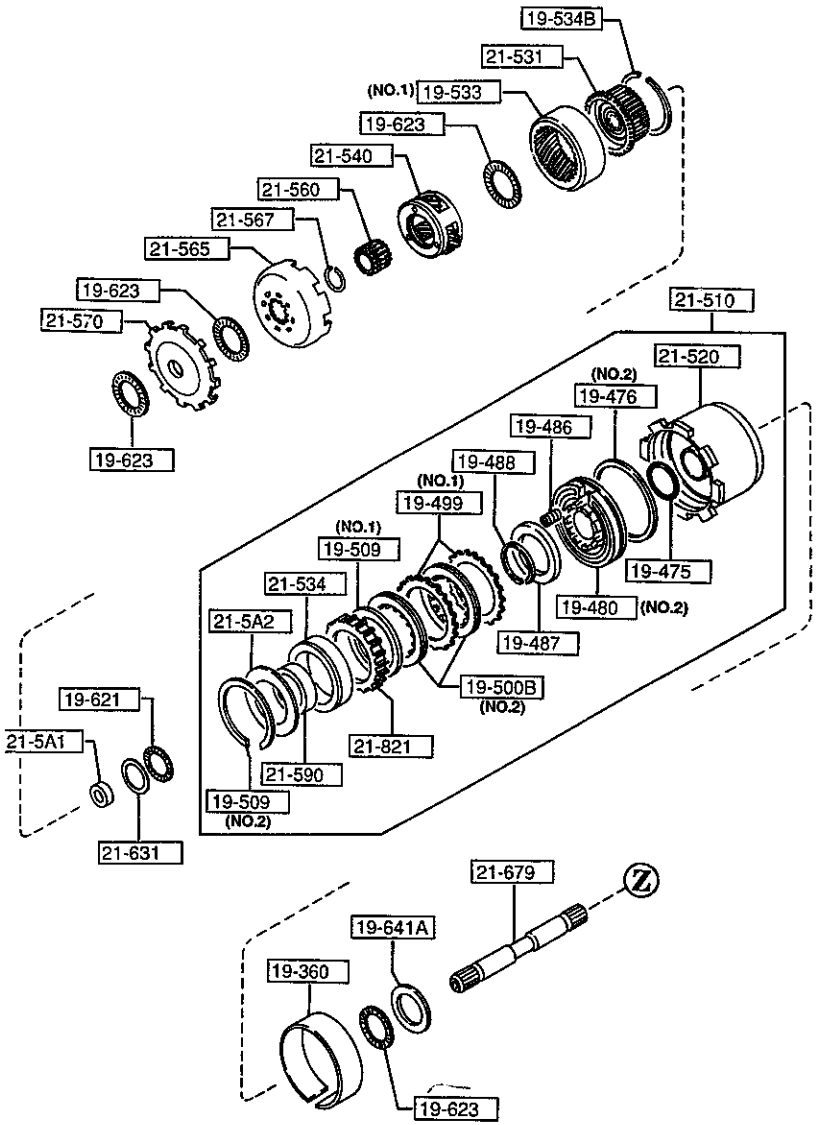

AUNA04

PART NO.	QTY	MODEL/RESTRICTION	MODEL/RESTRICTION	MODEL/RESTRICTION	FROM-TO
19-530		HUB,REAR CLUTCH			
0338-19-530	1				
19-531		HUB,REAR CLUTCH			
0338-19-531	1				
19-533		GEAR,INTERNAL			
BV01-19-533	1	(ILLUST. NO.1)			
0338-19-533A	1	(ILLUST. NO.2)			
19-534		RING,SNAP			
0338-19-534	1				
19-534B		RING,SNAP			
BU03-19-534	1				
19-540		CARRIER,FRONT			
0338-19-540	1				
19-560		GEAR,SUN			
0338-19-560	1				
19-565		SHELL,CONNECTING			
BU27-19-565	1				
19-566		RACE,SHELL BEARING			
0338-19-566	1				
19-567		RING,SNAP			
0338-19-567	1				
19-570		CARRIER,REAR			
0338-19-570	1				
19-598		RING,SNAP			
0338-19-598	1				
19-621		BEARING,NEEDLE			
0338-19-621	2				

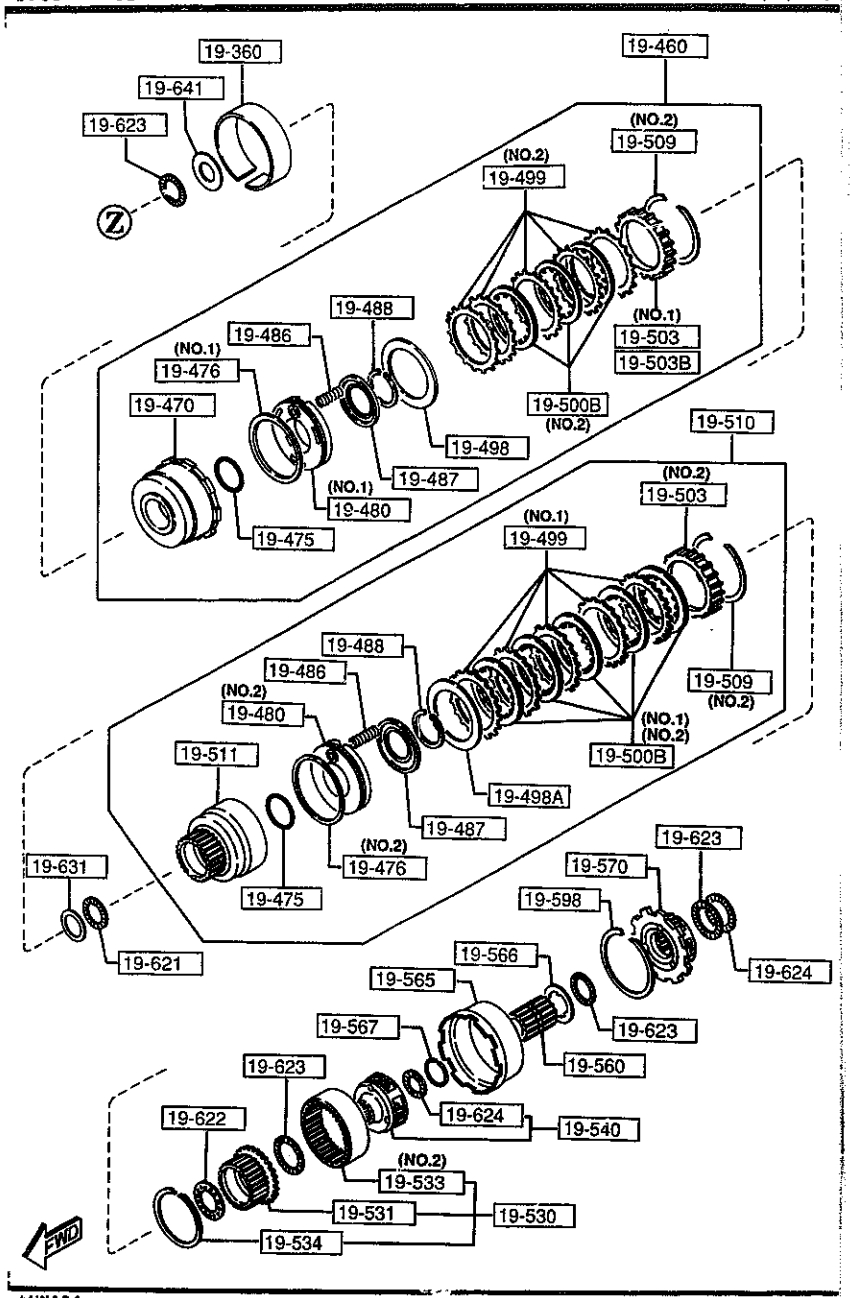

AUNA04

PART NO.	QTY	MODEL/RESTRICTION	MODEL/RESTRICTION	MODEL/RESTRICTION	FROM-TO
19-622		BEARING,NEEDLE			
BU91-19-622	1	D=34.7MM			
FT01-19-622	1	D=33.8MM			
19-623		BEARING,NEEDLE			
0338-19-623A	8				
19-624		BEARING,NEEDLE			
0338-19-624	2				
19-631		RACE,BRG.PUMP COVER			
0338-19-631	1	T=1.2MM			
0338-19-632	1	T=1.4MM			
0338-19-633	1	T=1.6MM			
0338-19-634	1	T=1.8MM			
0338-19-635	1	T=2MM			
0338-19-636	1	T=2.2MM			
19-641		WASHER,FRONT CLUTCH			
BV01-19-6C1	1	T=0.8MM			
BV01-19-6C2	1	T=1MM			
BV01-19-6C3	1	T=1.2MM			
BV01-19-6C4	1	T=1.4MM			
BV01-19-6C5	1	T=1.6MM			
BV01-19-6C6	1	T=1.8MM			
BV01-19-6C7	1	T=2MM			
BV01-19-6C8	1	T=2.2MM			

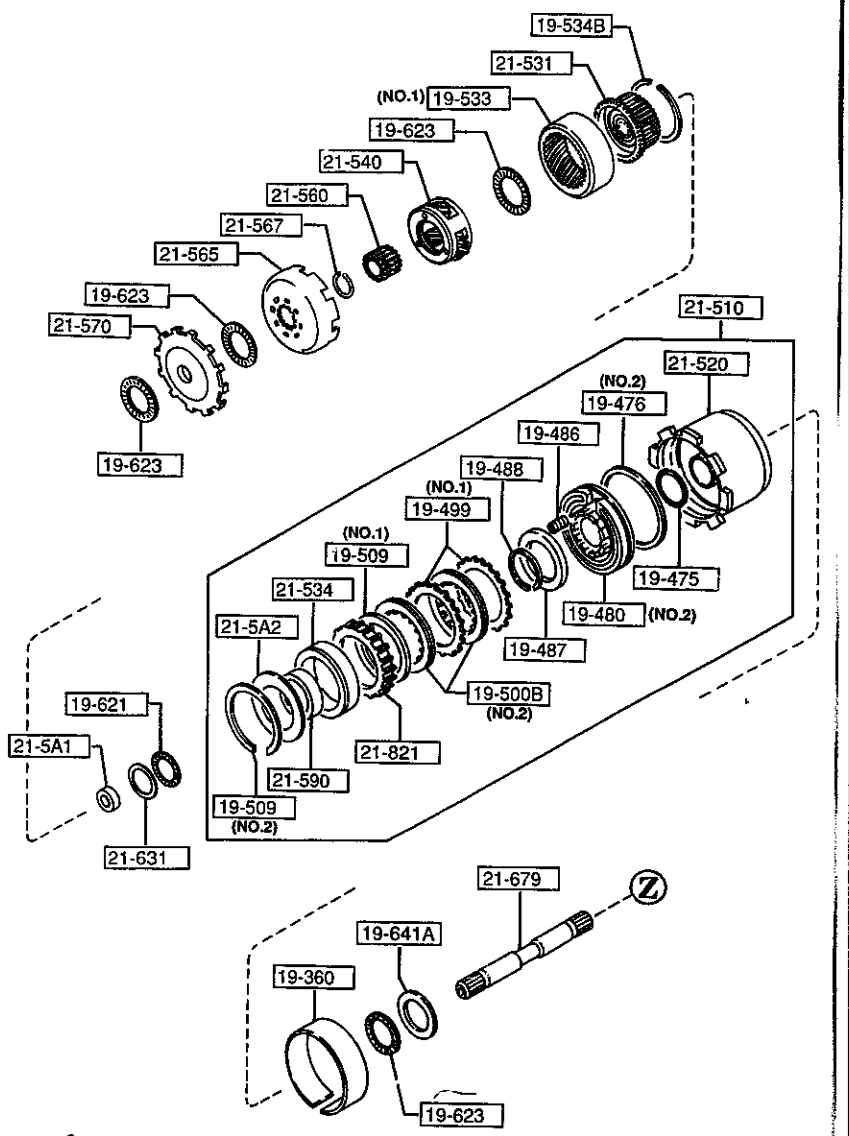

AUNA04

PART NO.	QTY	MODEL/RESTRICTION	MODEL/RESTRICTION	MODEL/RESTRICTION	FROM-TO
+---------+					
| 19-641A |		WASHER			
+---------+					
BV03-19-6C1	1	T=0.8MM			
BV03-19-6C2	1	T=1MM			
BV03-19-6C3	1	T=1.2MM			
BV03-19-6C4	1	T=1.4MM			
BV03-19-6C5	1	T=1.6MM			
BV03-19-6C6	1	T=1.8MM			
BV03-19-6C7	1	T=2MM			
BV03-19-6C8	1	T=2.2MM			
+---------+					
| 21-5A1 |		SLEEVE,SEAL-O.D.CARR IER			
+---------+					
BV01-21-5A1	1				
+---------+					
| 21-5A2 |		RACE,SIDE-ONE WAY CL UTCH			
+---------+					
BV01-21-5A2	1	T=0.6MM			
BV01-21-5A3	1	T=0.8MM			
BV01-21-5A4	1	T=1MM			
BV01-21-5A5	1	T=1.2MM			
BV01-21-535	1	T=0.4MM			
+---------+					
| 21-510 |		CLUTCH,DIRECT			
+---------+					
BV01-21-510B	1				
+---------+					
| 21-520 |		DRUM,DIRECT			
+---------+					
BV01-21-530C	1				
+---------+					
| 21-531 |		HUB,O/DRIVE CLUTCH			
+---------+					
BV01-21-536	1				
+---------+					
| 21-534 |		RACE,OUTER-ONE WAY C LUTCH			
+---------+					
BV01-21-534	1				

CAT. AUNA04-03

1995-04

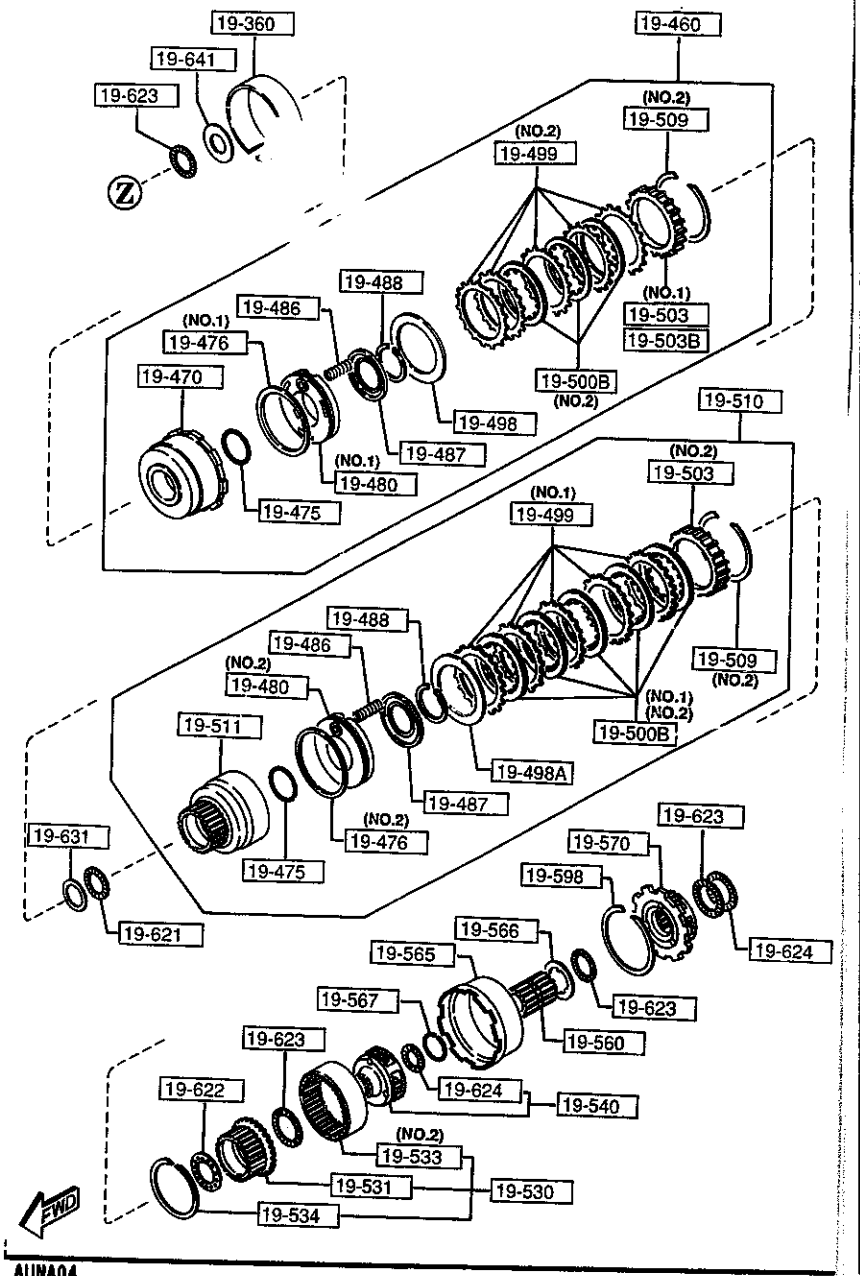

AUNA04

1930 -6 * CLUTCHES & PLANETARY GEARS (AUTOMATIC)

PART NO.	QTY	MODEL/RESTRICTION	MODEL/RESTRICTION	MODEL/RESTRICTION	FROM-TO
21-540		CARRIER,OVER DRIVE			
BV01-21-540B	1				
21-560		GEAR,OVER DRIVE			
BV01-21-560	1				
21-565		CONNECTING,SHELL			
BU03-21-565	1				
21-567		RING,SNAP			
BU03-21-567	1				
21-570		SUPPORT,CENTER			
BV01-21-570A	1				
21-590		CLUTCH,ONE WAY			
BV01-21-533	1				
21-631		RACE,BRG.HUB CLUTCH			
BU01-21-631	1	L=1.2MM			
BU01-21-632	1	L=1.4MM			
BU01-21-633	1	L=1.6MM			
BU01-21-634	1	L=1.8MM			
BU01-21-635	1	L=2MM			
BU01-21-636	1	L=2.2MM			
21-679		SHAFT,INTERMEDIATE			
BU01-21-679	1				
21-821		PLATE,RETAINING			
BV01-21-821A	1				

CAT. AUNA04-03

1995-04

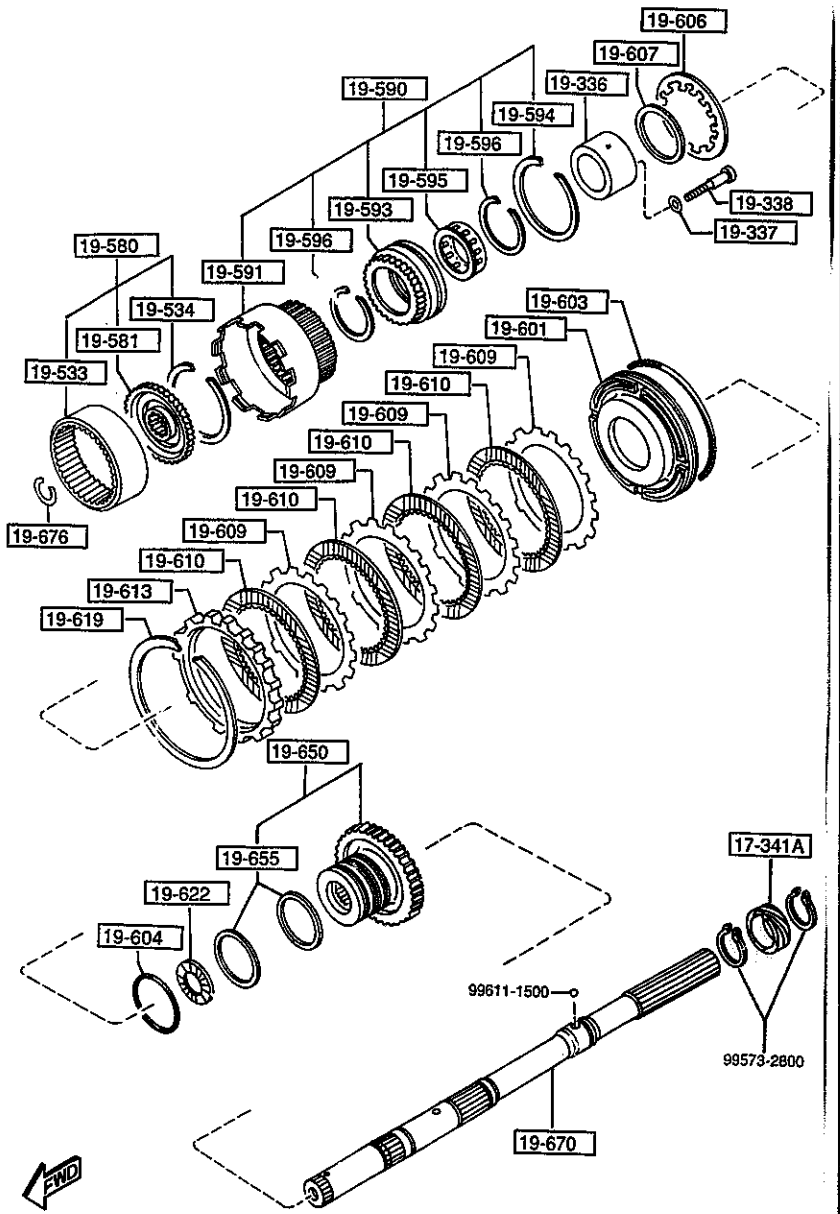

AUNA04

PART NO.	QTY	MODEL/RESTRICTION	MODEL/RESTRICTION	MODEL/RESTRICTION	FROM-TO
17-341A 1281-17-341	1	GEAR,SPEEDO.DRIVE			
19-336 0338-19-336	1	RACE,INNER			
19-337 0338-19-337	8	WASHER,PLAIN			
19-338 0338-19-338	8	BOLT			
19-533 0338-19-533A	1	GEAR,INTERNAL			
19-534 0338-19-534	1	RING,SNAP			
19-580 0338-19-580	1	FLANGE			
19-581 *0338-19-581	1	FLANGE,DRIVE			
19-590 0338-19-590	1	DRUM,CONNECTING			
19-591 0338-19-591	1	DRUM,CONNECTING			
19-593 0338-19-593	1	RACE,OUTER			
19-594 0338-19-594	1	RING,SNAP			
19-595 0338-19-595	1	CLUTCH,ONE WAY			
19-596 0338-19-596	2	RING,SNAP			

1940 -2 GOVERNOR, LOW & REVERSE PISTON (AUTOMATIC)

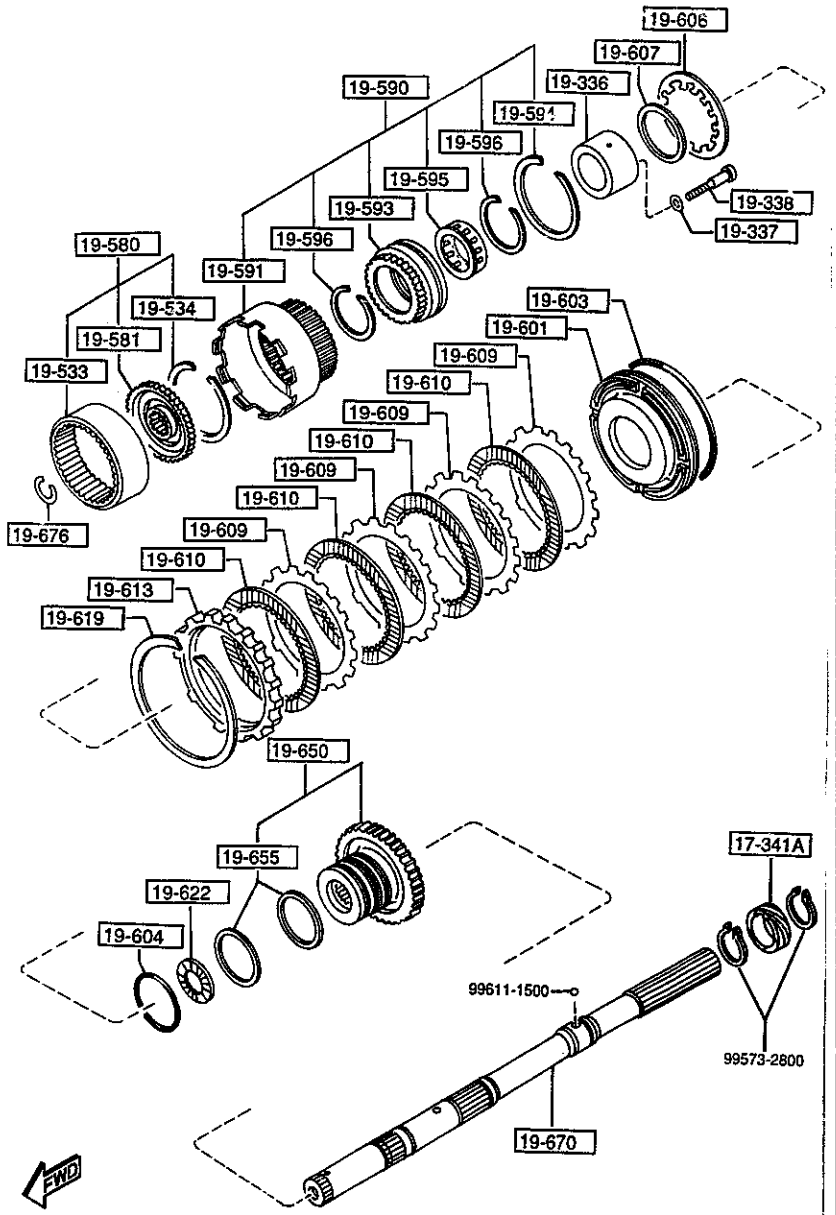

AUNA04

PART NO.	QTY	MODEL/RESTRICTION	MODEL/RESTRICTION	MODEL/RESTRICTION	FROM-TO
19-601		PISTON,LOW & REVERSE			
BT08-19-600	1				
19-603		SEAL,PISTON			
0338-19-603	1				
19-604		SEAL,'O'RING			
0338-19-604	1				
19-606		SPRING,PISTON			
0338-19-606	1				
19-607		RING,SNAP			
0338-19-607	1				
19-609		PLATE,DRIVEN			
0338-19-609	4				
19-610		PLATE,DRIVEN			
BU17-19-610	4				
19-613		PLATE,RETAINING			
0338-19-613A	1	T=11.8MM			
0338-19-614A	1	T=12MM			
0338-19-615A	1	T=12.2MM			
0338-19-616A	1	T=12.4MM			
0338-19-617A	1	T=12.6MM			
0338-19-618A	1	T=12.8MM			
19-619		RING,SNAP			
0338-19-619	1				
19-622		BEARING,NEEDLE			
BU91-19-622	1	D=34.7MM			
FT01-19-622	1	D=33.8MM			

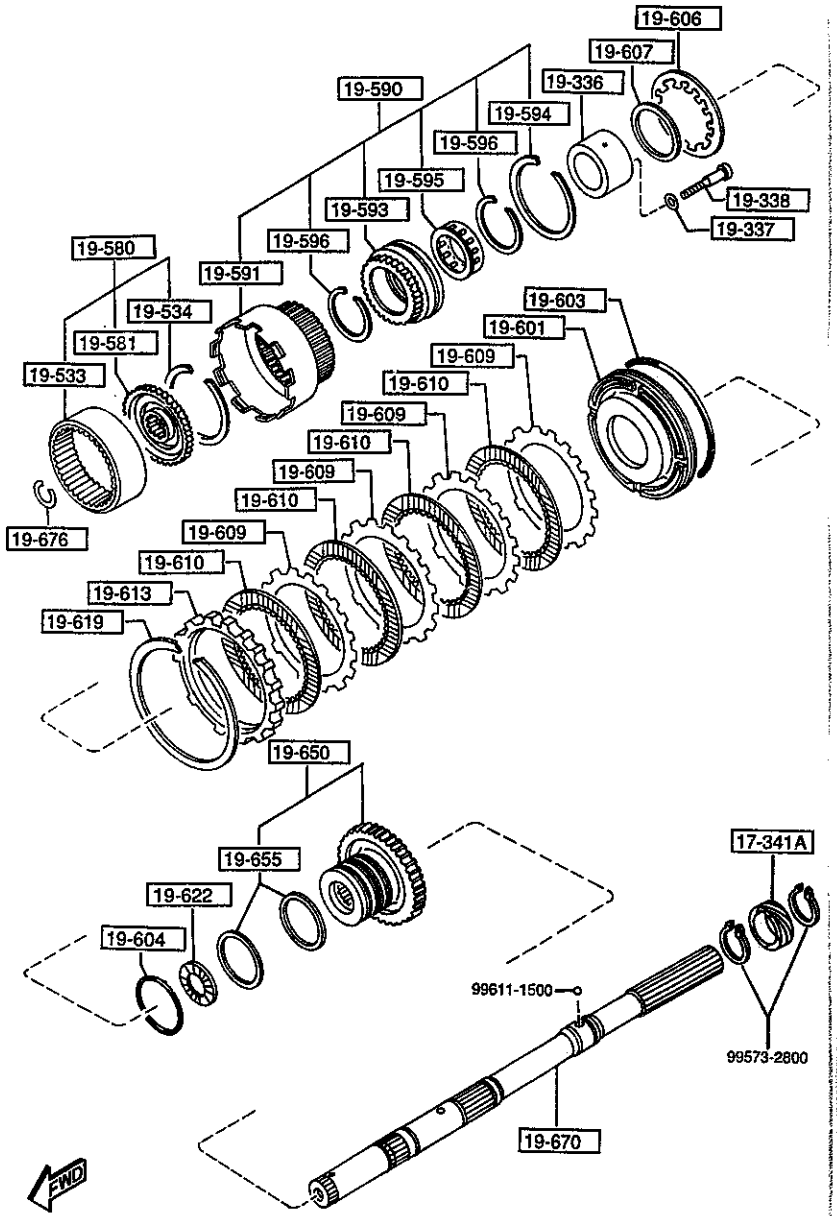

AUNA04

PART NO.	QTY	MODEL/RESTRICTION	MODEL/RESTRICTION	MODEL/RESTRICTION	FROM-TO
19-650		DISTRIBUTOR,OIL			
BV01-19-650	1				
19-655		RING,SEAL			
BV01-19-655	2				
19-670		SHAFT			
BU55-19-670	1				
19-676		RING			
0338-19-676	1				

CAT. AUNA04-03

1995-04

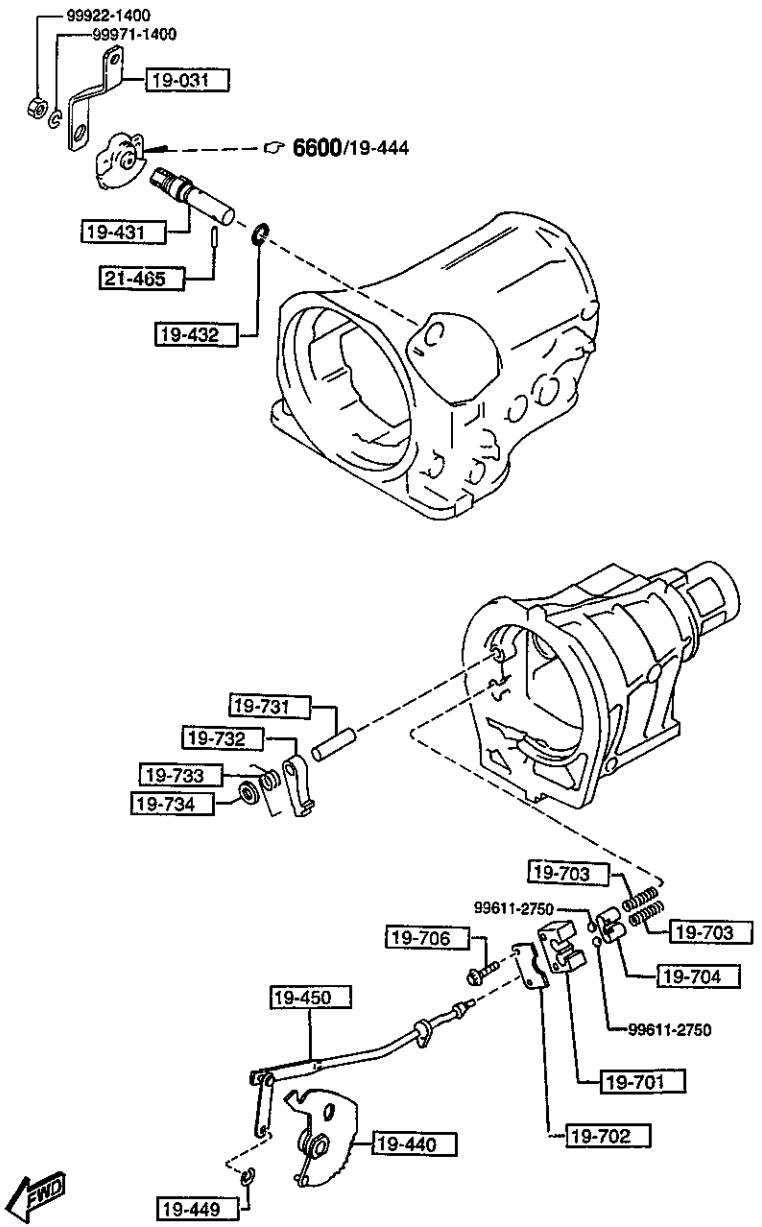

AUNA04

PART NO.	QTY	MODEL/RESTRICTION	MODEL/RESTRICTION	MODEL/RESTRICTION	FROM-TO
19-031		LEVER,SELECT			
BU55-19-031	1				
19-431		SHAFT,MANUAL			
BU67-19-431	1				
19-432		RING,'O'			
0338-19-432	1				
19-440		PLATE,MANUAL			
BU56-19-440	1				
19-449		RING,SNAP			
0338-19-449	1				
19-450		ROD,PARKING			
BU17-19-450	1				
19-701		SUPPORTER,ACTUATOR			
BU17-19-701	1				
19-702		PLATE,RETAINING			
0338-19-702A	1				
19-703		SPRING,BALL PARK			
BU17-19-703	2				
19-704		RETAINER			
BU17-19-704	1				
19-706		BOLT			
0338-19-706	1				
19-731		SHAFT,PARKING PAWL			
0338-19-731	1				
19-732		PAWL,PARKING			
BU17-19-732	1				
19-733		SPRING,PAWL RETURN			
0338-19-733C	1				

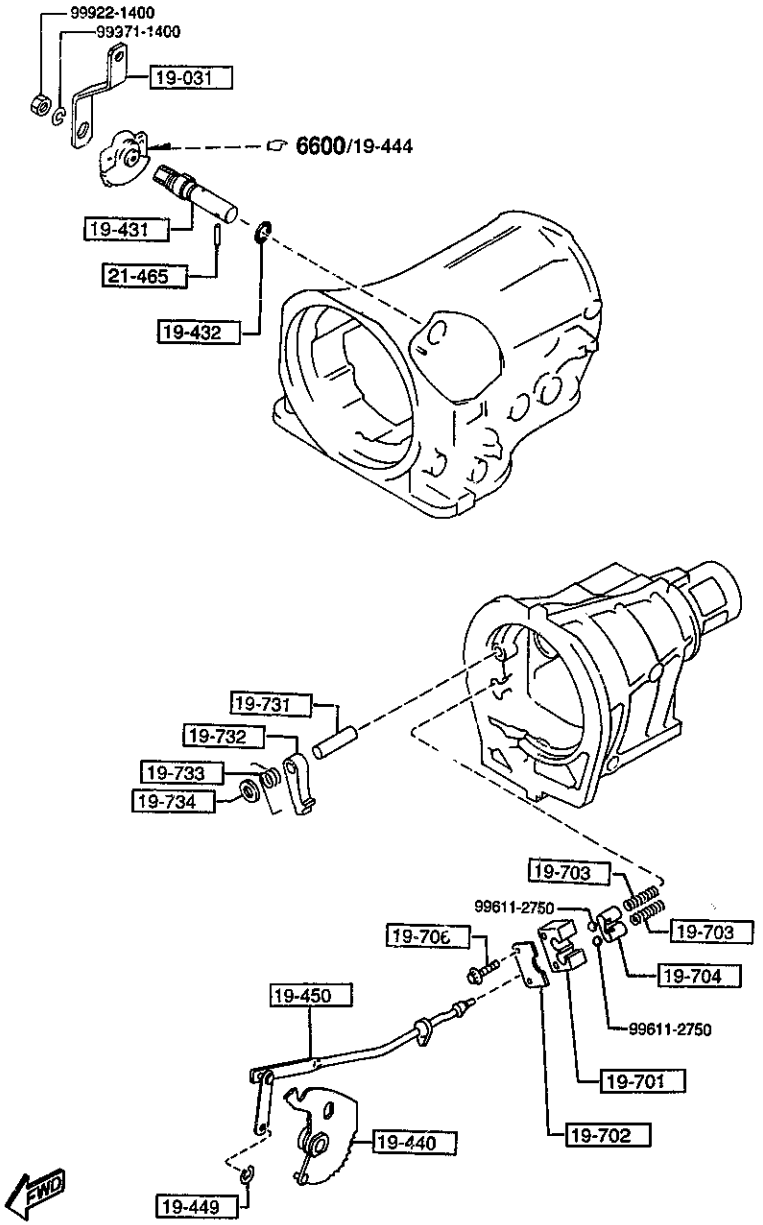

AUNA04

PART NO.	QTY	MODEL/RESTRICTION	MODEL/RESTRICTION	MODEL/RESTRICTION	FROM-TO
19-734 0338-19-734A	1	SPACER,DOWEL			
21-465 BU67-21-465	1	PIN,SPRING-PARKING ROD			

22-900

1-SEAL, OIL ..... (1)
2-GASKET, OIL PUMP ..... (1)
3-SEAL, OIL ..... (1)
4-RING, SEAL ..... (4)
5-RING, SEAL ..... (2)
6-SEAL, CUT RING ..... (1)
7-GASKET ..... (1)
8-SEAL, PISTON ..... (1)
9-SEAL, PISTON ..... (1)
10-SEAL, PISTON ..... (1)
11-SEAL, PISTON ..... (1)
12-SEAL, LATHE CUT ..... (1)
13-RING, "O" ..... (1)
14-RING, "O" ..... (1)
15-RING, "O" ..... (1)
16-SEAL, "O" RING ..... (3)
17-SEAL, LATHE CUT ..... (1)
18-SEAL, PISTON ..... (1)
19-SEAL, "O" RING ..... (1)
20-RING, SEAL ..... (2)
21-GASKET, EXTENTION ..... (1)
22-SEAL, "O" RING ..... (1)
23-GASKET, OIL PAN ..... (1)
24-GASKET, DRUM SUPPORT .. (1)
25-RING, "O" ..... (1)
26-RING, "O" ..... (1)
27-RING, "O" ..... (1)
28-GASKET, O/DRIVE CASE .. (1)
29-RING, "O" ..... (2)
30-RING, "O" ..... (1)
31-RING, "O" ..... (4)

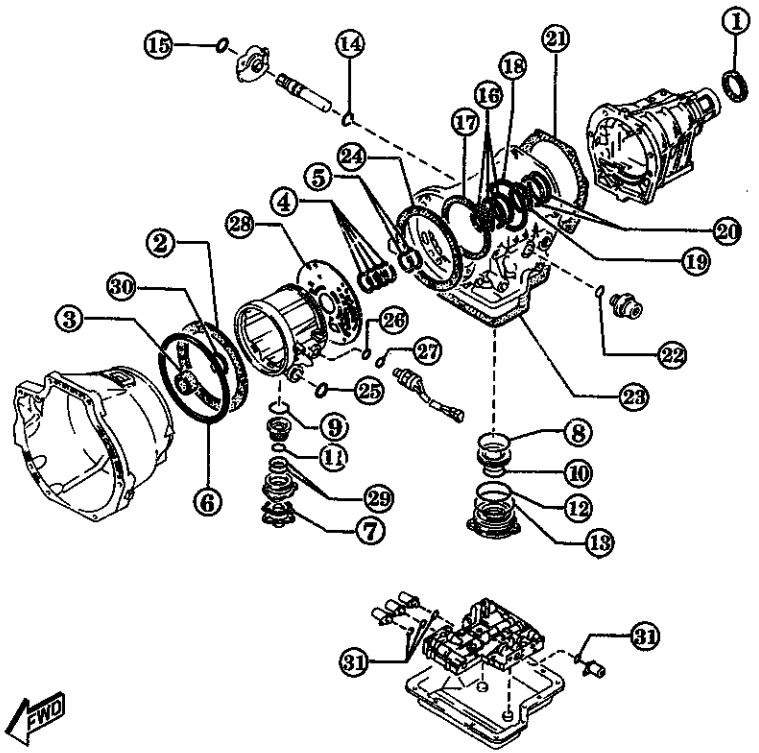

AUNA04

PART NO.	QTY	MODEL/RESTRICTION	MODEL/RESTRICTION	MODEL/RESTRICTION	FROM-TO
22-900		GASKET & SEAL KIT			
N451-22-900	1				

CAT. AUNA04-03

1995-04