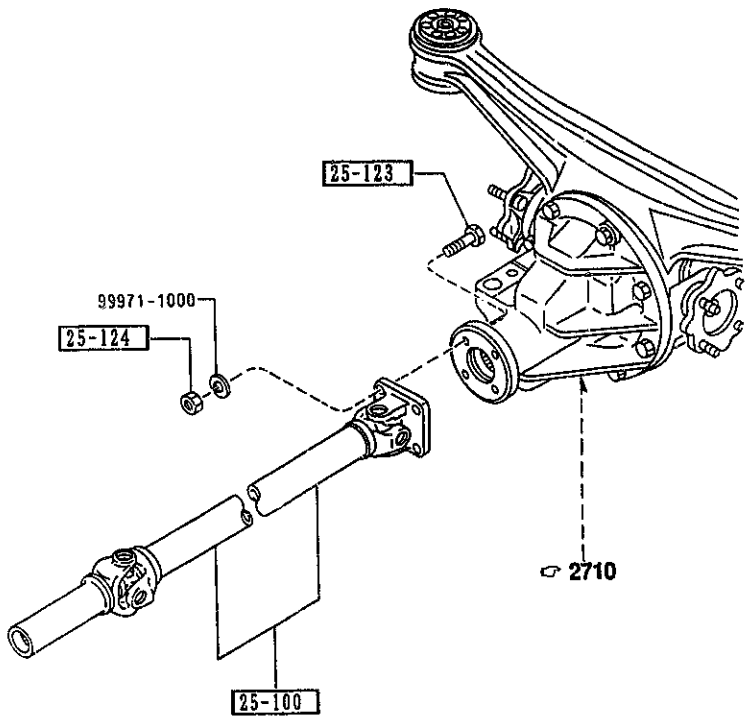

2505 -1 * REAR PROPELLER SHAFT

PART NO.	QTY	MODEL/RESTRICTION	MODEL/RESTRICTION	MODEL/RESTRICTION	FROM-TO
25-100		SHAFT,PROPELLER-FRT			
MF04-25-100	1				
25-123		BOLT			
P011-25-123	4				
25-124		NUT			
1368-25-124	4				

(-5201)

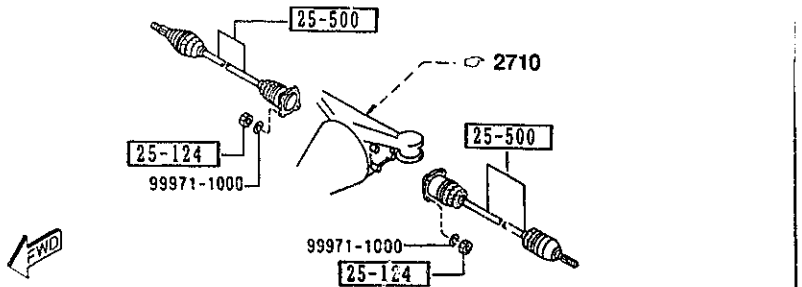

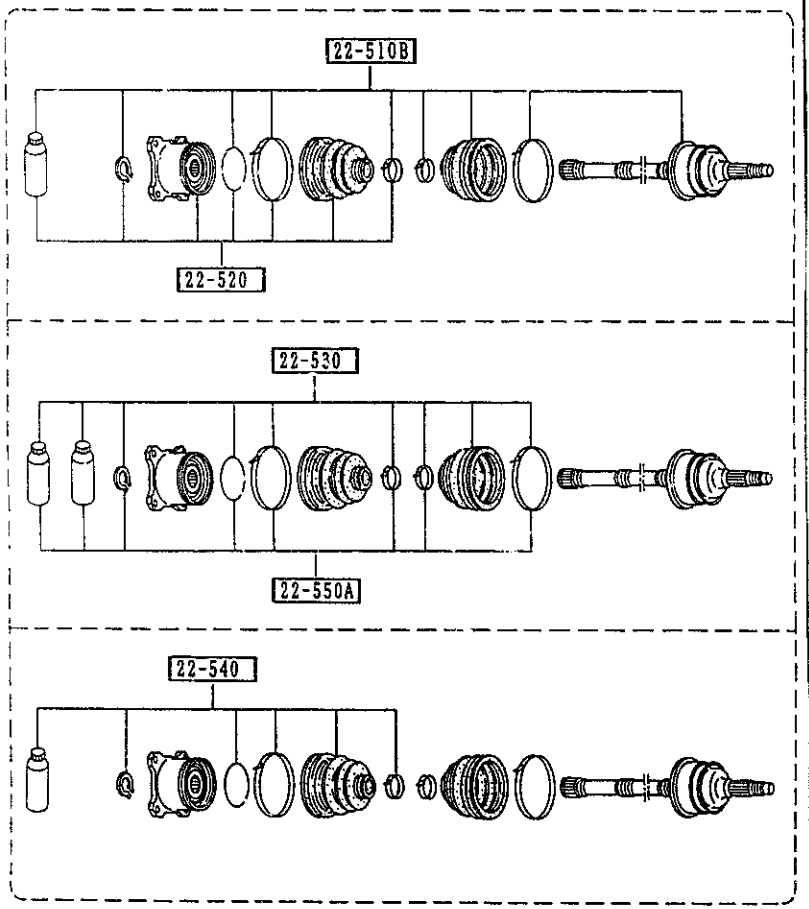

AUNA05

(5201-)

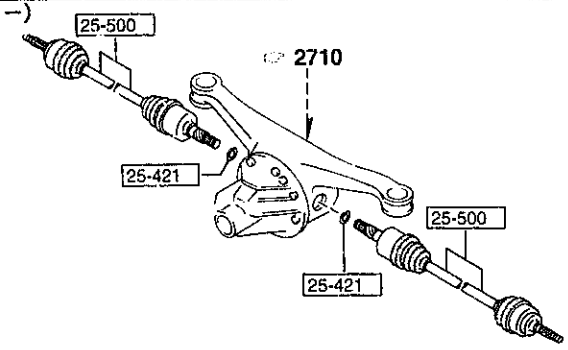

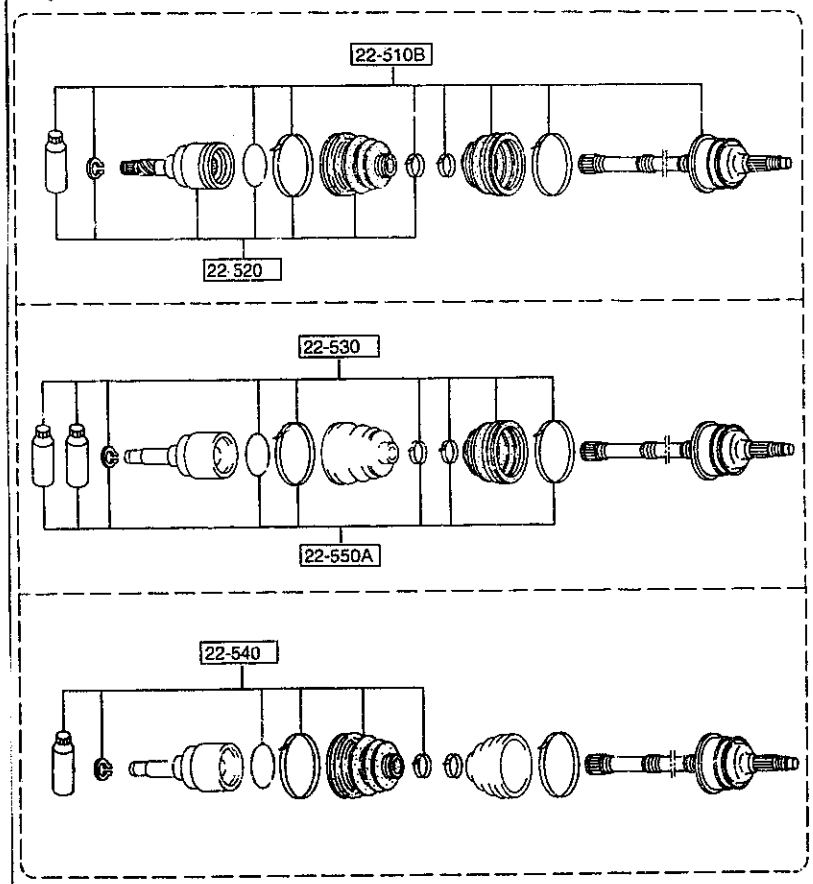

AUNA05

2550 REAR DRIVE SHAFT (1/2)

(-5201)

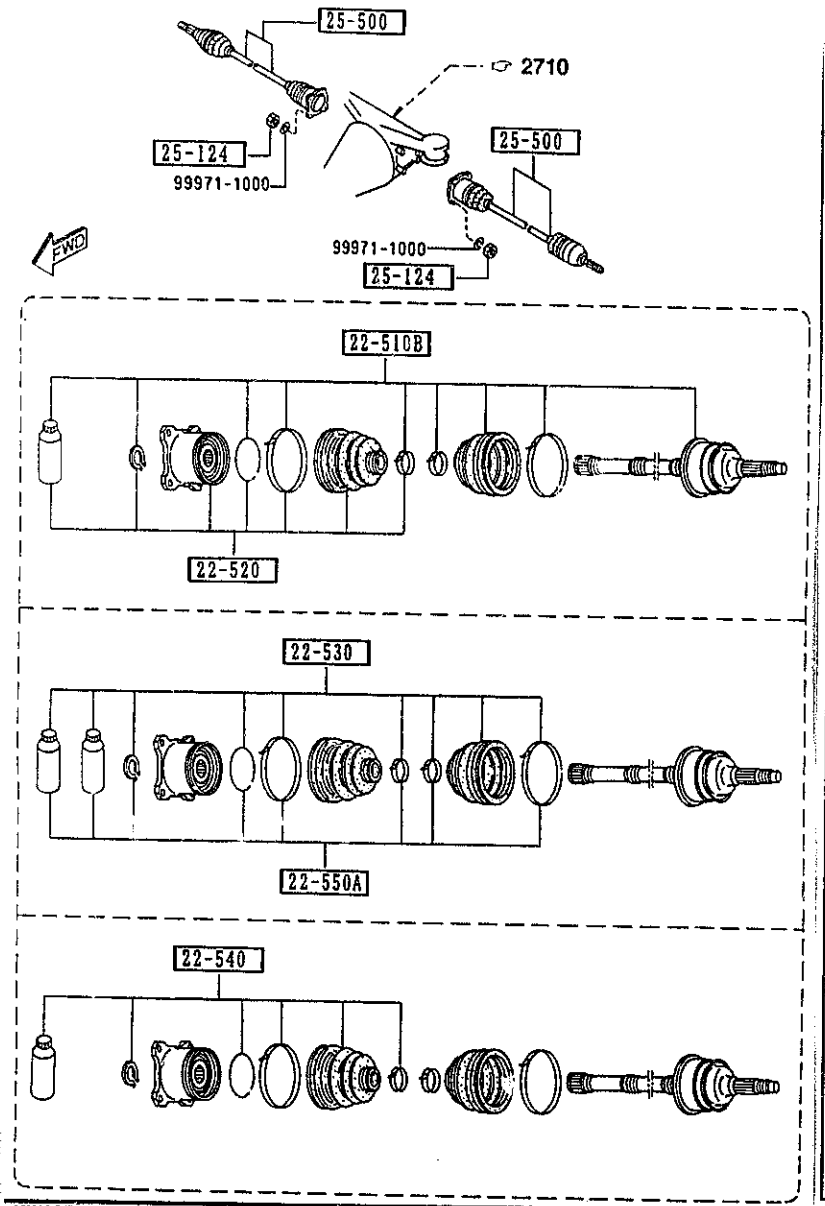

2550 -1 * REAR DRIVE SHAFT

PART NO.	QTY	MODEL/RESTRICTION	MODEL/RESTRICTION	MODEL/RESTRICTION	FROM-TO
22-510B		JOINT SET,OUTER			
MD02-22-510 A (MD02-22-510A)	2	(W/O A. LOCK BRAKE)			-5201
MD03-22-510 A (MD03-22-510A)	2	(W/A. LOCK BRAKE)			-5201
MD02-22-510A	2	(W/O A. LOCK BRAKE)			5201-
MD03-22-510A	2	(W/A. LOCK BRAKE)			5201-
22-520		JOINT SET,INNER			
MD02-22-520 A (MD02-22-520A)	2				-5201
MD02-22-520A	2				5201-
22-530		BOOT SET,OUTER JOINT			
MD98-22-530	2				
22-540		BOOT SET,INNER JOINT			
MD98-22-540	2				
22-550A		CLIP SET,DRIVE SHAFT			
MD98-22-550	2				
25-124		NUT			
1368-25-124	8				-5201
25-421		CLIP			
G003-25-421	2				5201-
25-500		SHAFT,DRIVE			
MD02-25-500	2	(W/O A. LOCK BRAKE)			-5201
MD03-25-500	2	(W/A. LOCK BRAKE)			-5201
MD02-25-500B	2	(W/O A. LOCK BRAKE)			5201-
MD03-25-500B	2	(W/A. LOCK BRAKE)			5201-

5201 NA35* -614193

AUNA05

CAT. AUNA05-04

1997-07

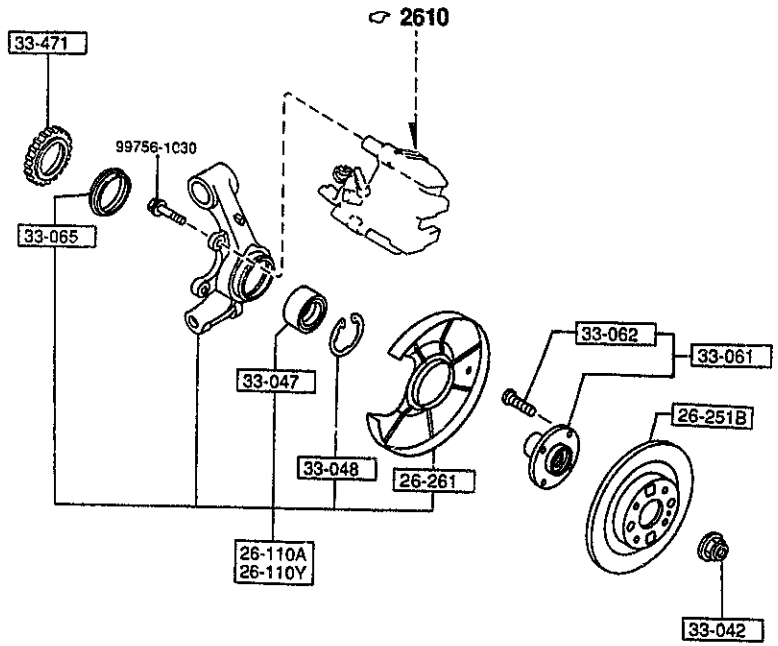

2600 -1 * REAR AXLE

PART NO.	QTY	MODEL/RESTRICTION	MODEL/RESTRICTION	MODEL/RESTRICTION	FROM-TO
26-110A		KNUCKLE(R),REAR			
NA75-26-130	1	(W/O A. LOCK BRAKE)			
NA80-26-130	1	(W/A. LOCK BRAKE)			
26-110Y		KNUCKLE(L),REAR			
NA75-26-140	1	(W/O A. LOCK BRAKE)			
NA80-26-140	1	(W/A. LOCK BRAKE)			
26-251B		PLATE,DISC			
BR74-26-251B	2				
26-261		COVER,DUST			
B530-26-261B	2				
33-042		NUT			
D06Y-33-042	2	W/WASHER			
33-047		BEARING,WHEEL			
B455-33-047B A (B455-33-047C)	2				-6624
*B455-33-047C	2				6624-
33-048		RING,RETAINING-DISC PLATE			
H260-33-048	2				
33-061		HUB,WHEEL			
B01A-33-060 A (B01A-33-060A)	2				-4C01
B01A-33-060A	2				4C01-
33-062		BOLT,HUB			
B01Y-33-062	8				
33-065		SEAL,OIL-AXLE			
G304-33-065	2				
33-471		ROTOR,SENSOR-FRT A.B.S.			
B603-33-471	2				

4C01 NA35* -609691
6624 NA3** -719627

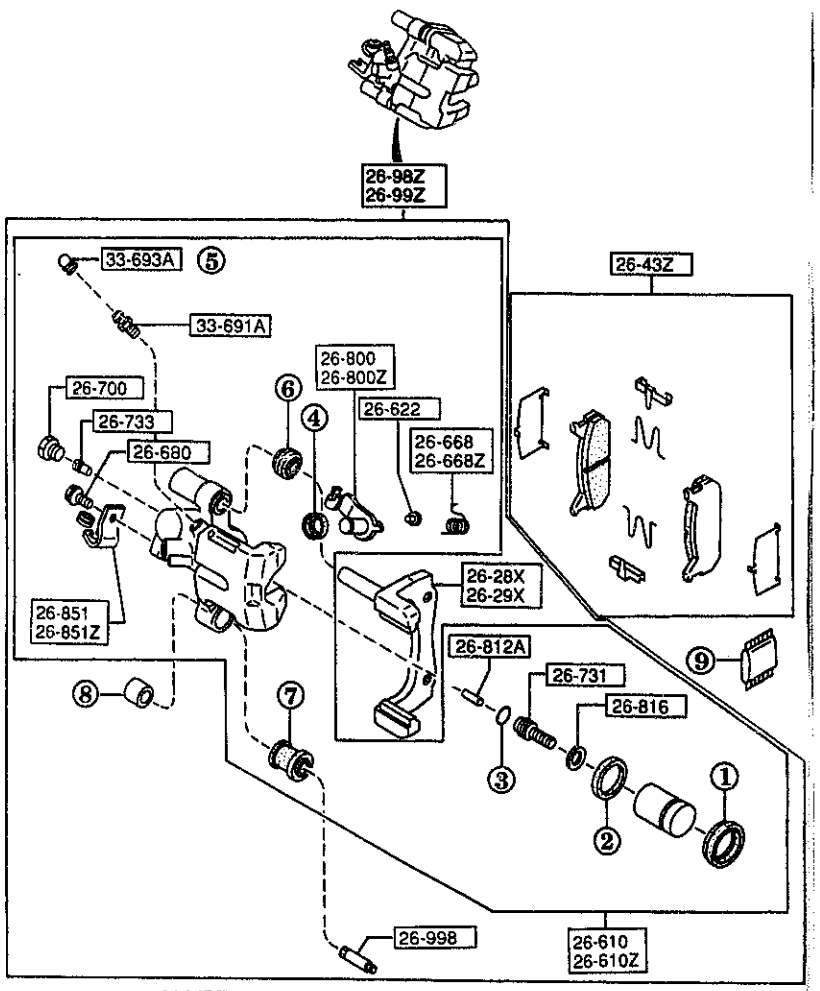

NOTE
①~⑨⇨ 26-46Z
THE D-CODE OF 26-46Z CONSISTS OF FIGURE NUMBERS ① THROUGH ⑨.

FWD

THOUGH ILLUSTRATIONS OF D-CODE 26-43Z AND 26-46Z ARE FOR LEFT SIDE ONLY, QUANTITIES OF THESE D-CODES IN THE TEXT ARE FOR ONE VEHICLE.

AUNA05

2610 -1 REAR BRAKE MECHANISMS

PART NO.	QTY	MODEL/RESTRICTION	MODEL/RESTRICTION	MODEL/RESTRICTION	FROM-TO
26-28X		SUPPORT(R),MOUNTING			
NA75-26-28X	1				
26-29X		SUPPORT(L),MOUNTING			
NA75-26-29X	1				
26-43Z		PAD SET,RR CALIPER			
NAY5-26-43Z	1				-5C01
AN(NAY5-26-43ZA)					
*NAY5-26-43ZA	1				5C01-
26-46Z		SEAL & BOOT SET,CAL.-RR			
NAY1-26-46ZA	1				
26-610		BODY & PISTON(R),CALIPER			
NA75-26-61XA	1				-5901
A (NA75-26-61XB)					
NA75-26-61XB	1				5901-
26-610Z		BODY & PISTON(L),CALIPER			
NA75-26-71XA	1				-5901
A (NA75-26-71XB)					
NA75-26-71XB	1				5901-
26-622		PIN,STOPPER-RR CALIPER			
BW0H-26-696	2				
26-668		SPRING(R),LEVER			
BW0H-26-668	1				
26-668Z		SPRING(L),LEVER			
BW0H-26-669	1				
26-680		BOLT			
BW0H-26-680	2				
26-700		PLUG,SCREW			
BW0H-26-700	2				
26-731		SPINDLE,ADJUSTER			
GA2E-26-731	2				-5201

5201 NA35* -614193
5901 NA3** -702989
5C01 NA3** -706448

CAT. AUNA05-04 1997-07

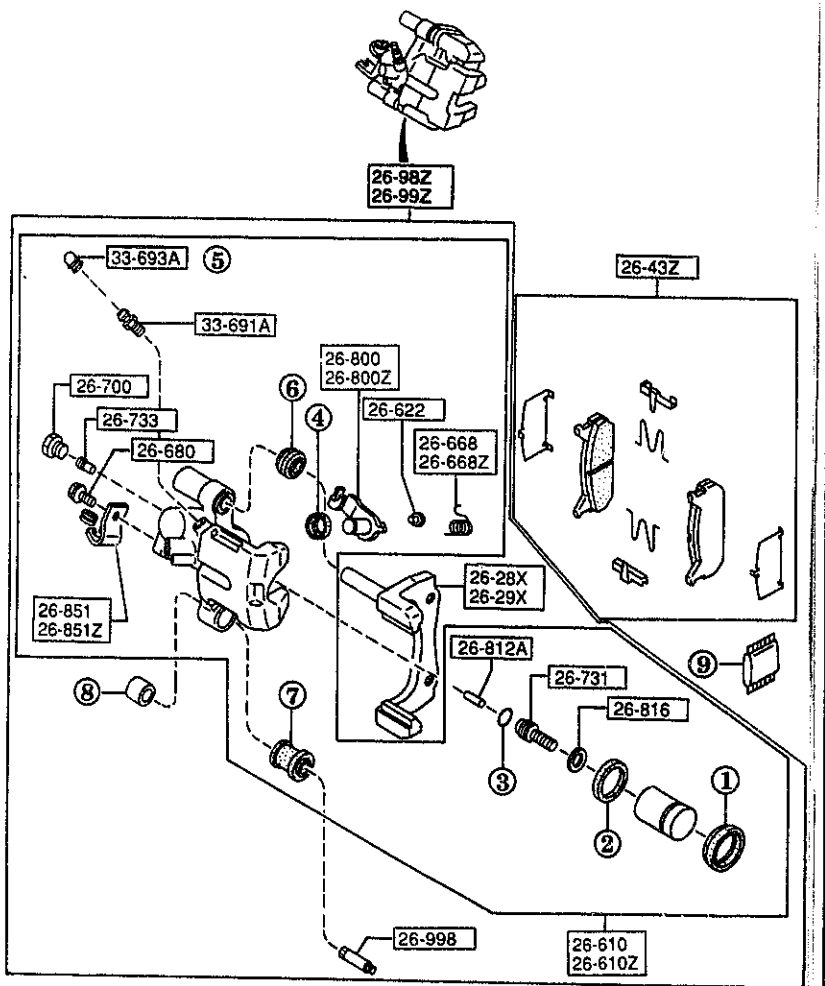

NOTE
①～⑨⇨ 26-46Z
THE D-CODE OF 26-46Z CONSISTS OF FIGURE NUMBERS ① THROUGH ⑨.

FWD

THOUGH ILLUSTRATIONS OF D-CODE 26-43Z AND 26-46Z ARE FOR LEFT SIDE ONLY, QUANTITIES OF THESE D-CODES IN THE TEXT ARE FOR ONE VEHICLE.

AUNA05

PART NO.	QTY	MODEL/RESTRICTION	MODEL/RESTRICTION	MODEL/RESTRICTION	FROM-TO
CONT'D					
NA75-26-731	2				5201-
+---------+					
| 26-733 |		GEAR,ADJUST			
+---------+					
BW0H-26-733	2				
+---------+					
| 26-800 |		LEVER(R),OPERATING			
+---------+					
BR76-26-800 A (BR76-26-800A)	1				-5901
BR76-26-800A	1				5901-
+---------+					
| 26-800Z |		LEVER(L),OPERATING			
+---------+					
BR76-26-810 A (BR76-26-810A)	1				-5901
BR76-26-810A	1				5901-
+---------+					
| 26-812A |		ROD,PUSH-FRT CALIPER			
+---------+					
BW0H-26-812	2				
+---------+					
| 26-816 |		RING,SNAP-RR CALIPER			
+---------+					
GA2E-26-816	2				
+---------+					
| 26-851 |		BRACKET(R),CABLE			
+---------+					
BW0H-26-851	1				
+---------+					
| 26-851Z |		BRACKET(L),CABLE			
+---------+					
BW0H-26-861	1				
+---------+					
| 26-98Z |		CALIPER(R),PADLESS-RR			
+---------+					
*NAZ5-26-98ZA A (NAZ5-26-98ZB)	1				-5901
*NAZ5-26-98ZB	1				5901-
+---------+					
| 26-99Z |		CALIPER(L),PADLESS-RR			
+---------+					
*NAZ5-26-99ZA A (NAZ5-26-99ZB)	1				-5901
*NAZ5-26-99ZB	1				5901-
+---------+					
| 26-998 |		PIN,GUIDE			
+---------+					
BW0H-26-998A	2				
+---------+					
| 33-691A |		SCREW,BLEEDER			
+---------+					
BW0H-26-691	2				

5201 NA35* -616193
5901 NA3** -702989

CAT. AUNA05-04

1997-07

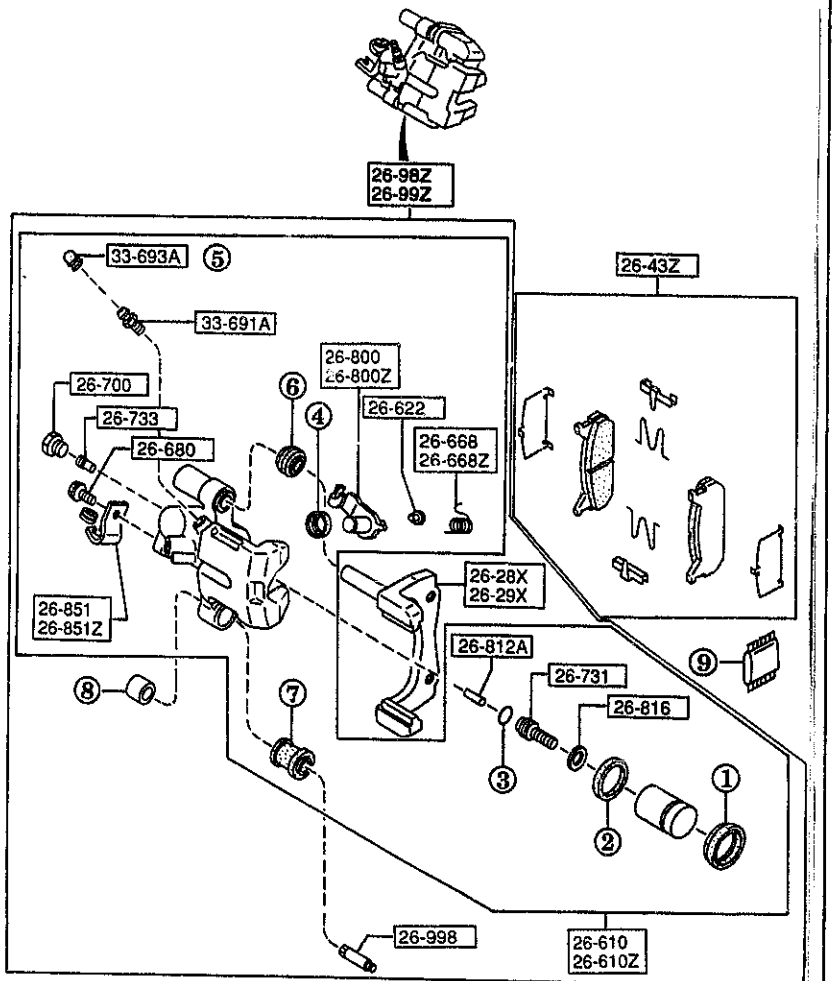

NOTE
①~⑨⇨ 26-46Z
THE D-CODE OF 26-46Z CONSISTS OF FIGURE NUMBERS ① THROUGH ⑨.

FWD

THOUGH ILLUSTRATIONS OF D-CODE 26-43Z AND 26-46Z ARE FOR LEFT SIDE ONLY, QUANTITIES OF THESE D-CODES IN THE TEXT ARE FOR ONE VEHICLE.

PART NO.	QTY	MODEL/RESTRICTION	MODEL/RESTRICTION	MODEL/RESTRICTION	FROM-TO
33-693A 0259-33-693	2	CAP,BLEEDER SCREW			

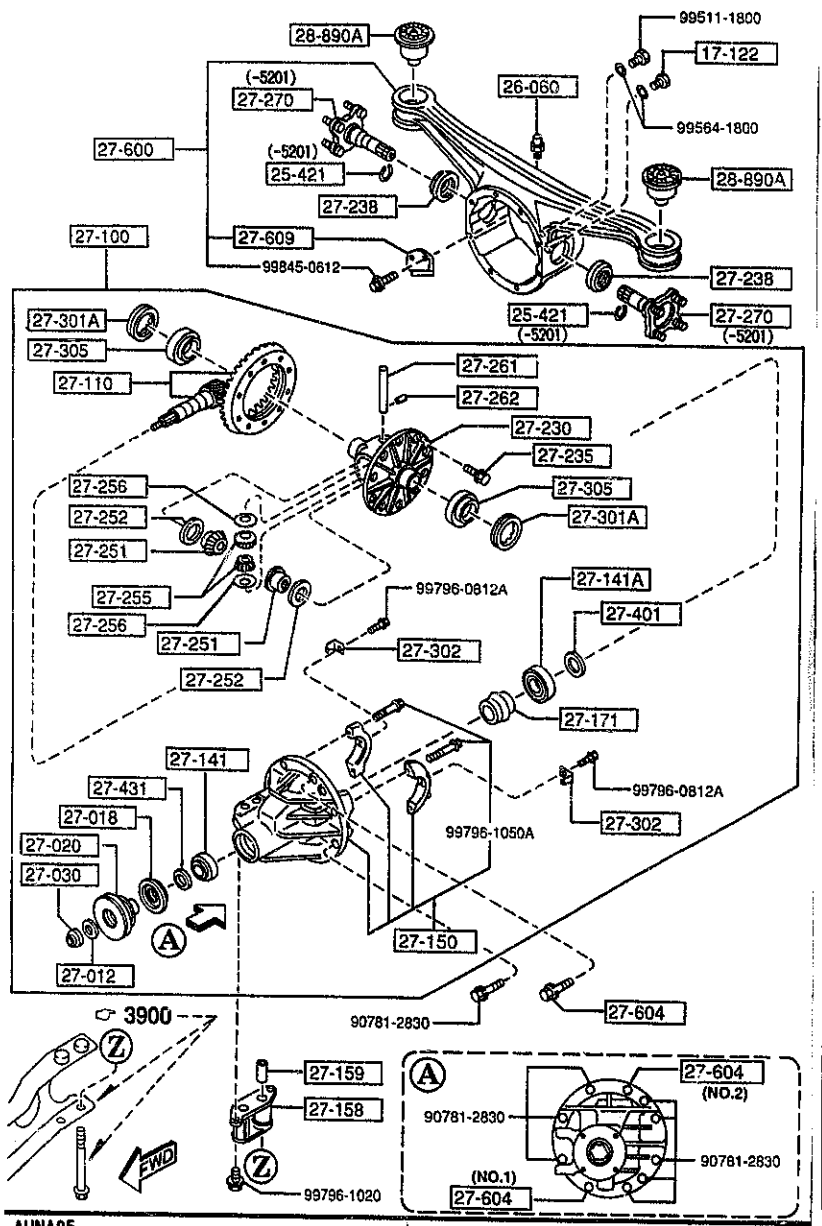

AUNA05

PART NO.	QTY	MODEL/RESTRICTION	MODEL/RESTRICTION	MODEL/RESTRICTION	FROM-TO
17-122		PLUG,MAGNET			
0810-17-121	1				
25-421		CLIP			
G003-25-421	2				-5201
26-060		BREATHER			
0730-26-060	1				
27-012		WASHER			
0223-27-012	1				
27-018		SEAL,OIL			
MA02-27-165	1				-5508
MA02-27-165A	1				5508-
27-020		FLANGE,COMPANION			
MA02-27-120	1	(AT)			-5508
MA03-27-120	1	(MT)			-5508
MA02-27-120A	1	(AT)			5508-
MA03-27-120A	1	(MT)			5508-
27-030		NUT,LOCK			
0223-27-030	1				
27-100		DRIVING & DIFF.			
MA02-27-100	1	(AT)			
MA03-27-100A	1	(MT)			
27-110		GEAR SET,FINAL			
M068-27-110A	1	R=4.100			
27-141		BEARING,PINION			
0755-27-210	1				
27-141A		BEARING,PINION			
M025-27-210	1				
27-150		CARRIER,DIFFERENTIAL			

5201 NA35* -614193
5508 NA35* -620210

CAT. AUNA05-04

1997-07

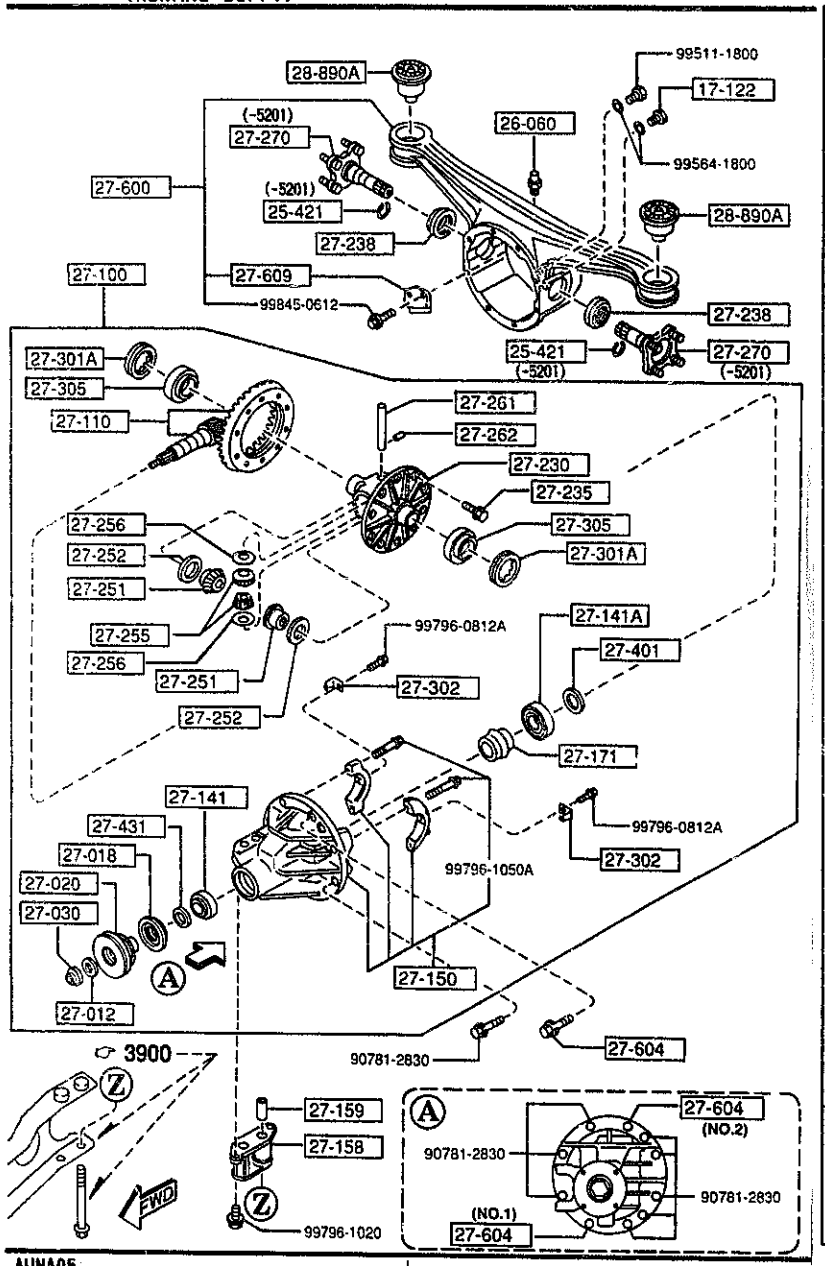

AUNA05

2710 -2 REAR DIFFERENTIALS
(NORMAL DIFF.)

PART NO.	QTY	MODEL/RESTRICTION	MODEL/RESTRICTION	MODEL/RESTRICTION	FROM-TO
CONT'D					
MA02-27-150A (MA02-27-150A)	1				-6601
*MA02-27-150A	1				6601-
| 27-158 |		SPACE			
T020-27-158A	1				
| 27-159 |		PIN,TUBULAR			
T020-27-159A	1				-4901
MA02-27-159	1				4901-
| 27-171 |		PIECE,DISTANCE			
M035-27-171	1				
| 27-230 |		CASE			
M069-27-231	1				
| 27-235 |		BOLT,RING GEAR			
8051-27-235	10	D=10.0MM			
8051-27-236	10	D=10.2MM			
| 27-238 |		SEAL,OIL			
MA02-27-238	2				
| 27-251 |		GEAR,DIFF.SIDE			
M069-27-251	2				
| 27-252 |		WASHER			
0290-27-252	2	T=2MM			
0290-27-253	2	T=2.1MM			
0290-27-254	2	T=2.2MM			
0290-27-256	2	T=2.05MM			
0290-27-259	2	T=2.15MM			
| 27-255 |		PINION,DIFFERENTIAL			
M025-27-255B	2				-6301

4901 NA35* -602618
6301 NA3** -714662
6601 NA3** -719621

CAT. AUNA05-04

1997-07

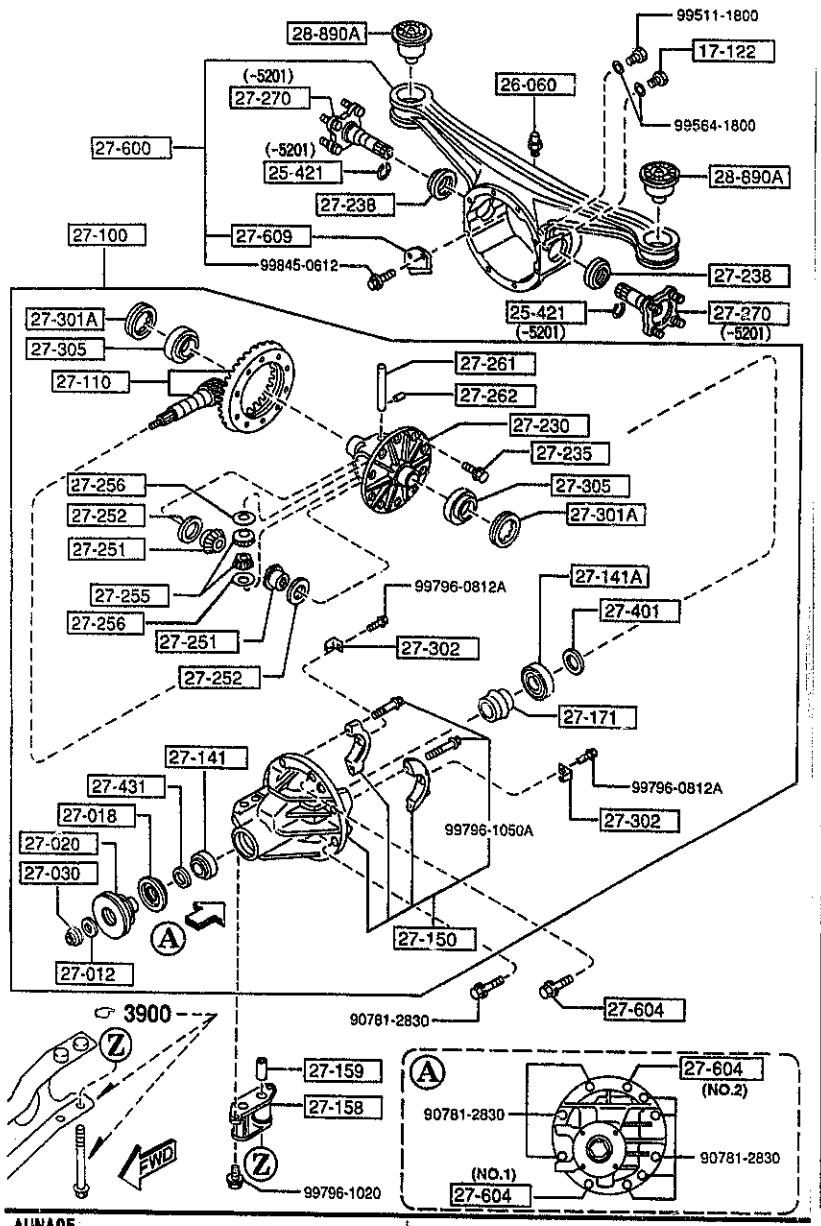

PART NO.	QTY	MODEL/RESTRICTION	MODEL/RESTRICTION	MODEL/RESTRICTION	FROM-TO
CONT'D A (M025-27-255C)					
*M025-27-255C	2				6301-
27-256		WASHER,THRUST			
M025-27-256	2	T=2.0MM			
27-261		SHAFT,DIFF. PINION			
M025-27-261A	1				
27-262		PIN			
0114-27-262	1				
27-270		YOKE,DIFFERENTIAL			
M055-27-270C	2				-5201
27-301A		SCREW,ADJUST			
0290-27-301	2				
27-302		PLATE,LOCK			
0290-27-302	2				
27-305		BEARING			
0221-27-350	2				
27-401		SPACER			
0223-27-401A	1	T=3.08MM			
0223-27-402A	1	T=3.11MM			
0223-27-403A	1	T=3.14MM			
0223-27-404A	1	T=3.17MM			
0223-27-405A	1	T=3.2MM			
0223-27-406A	1	T=3.23MM			
0223-27-407A	1	T=3.26MM			
0223-27-408A	1	T=3.29MM			
0223-27-409A		T=3.32MM			

5201 NA35* -614193
6301 NA3** -714662

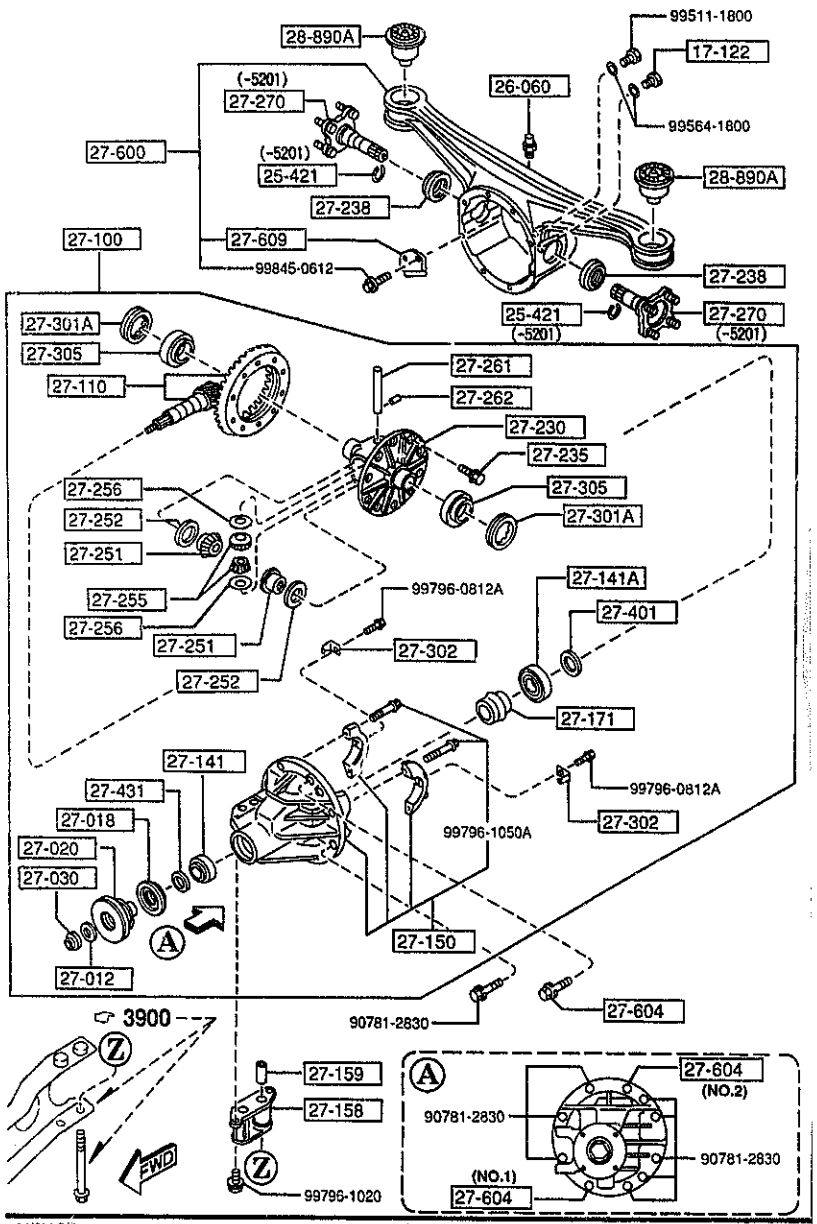

PART NO.	QTY	MODEL/RESTRICTION	MODEL/RESTRICTION	MODEL/RESTRICTION	FROM-TO
CONT'D	1				
0223-27-411A	1	T=3.35MM			
0223-27-412A	1	T=3.38MM			
0223-27-413A	1	T=3.41MM			
0223-27-414A	1	T=3.44MM			
0223-27-415A	1	T=3.47MM			
0223-27-416	1	T=3.095MM			5301-
0223-27-417	1	T=3.125MM			5301-
0223-27-418	1	T=3.155MM			5301-
0223-27-419	1	T=3.185MM			5301-
0223-27-422	1	T=3.215MM			5301-
0223-27-423	1	T=3.245MM			5301-
0223-27-424	1	T=3.275MM			5301-
0223-27-425	1	T=3.305MM			5301-
0223-27-426	1	T=3.335MM			5301-
0223-27-427	1	T=3.365MM			5301-
0223-27-428	1	T=3.395MM			5301-
0223-27-433	1	T=3.425MM			5301-
0223-27-434	1	T=3.455MM			5301-
+---------+ | 27-431 | +---------+ PA01-27-431	1	SPACER			
+---------+ | 27-600 | +---------+ MA02-27-600 AN(MA02-27-600A)	1	CASING,DIFFERENTIAL			-5201
MA02-27-600A	1				5201-

5201 NA35* -614193
5301 NA35* -616742

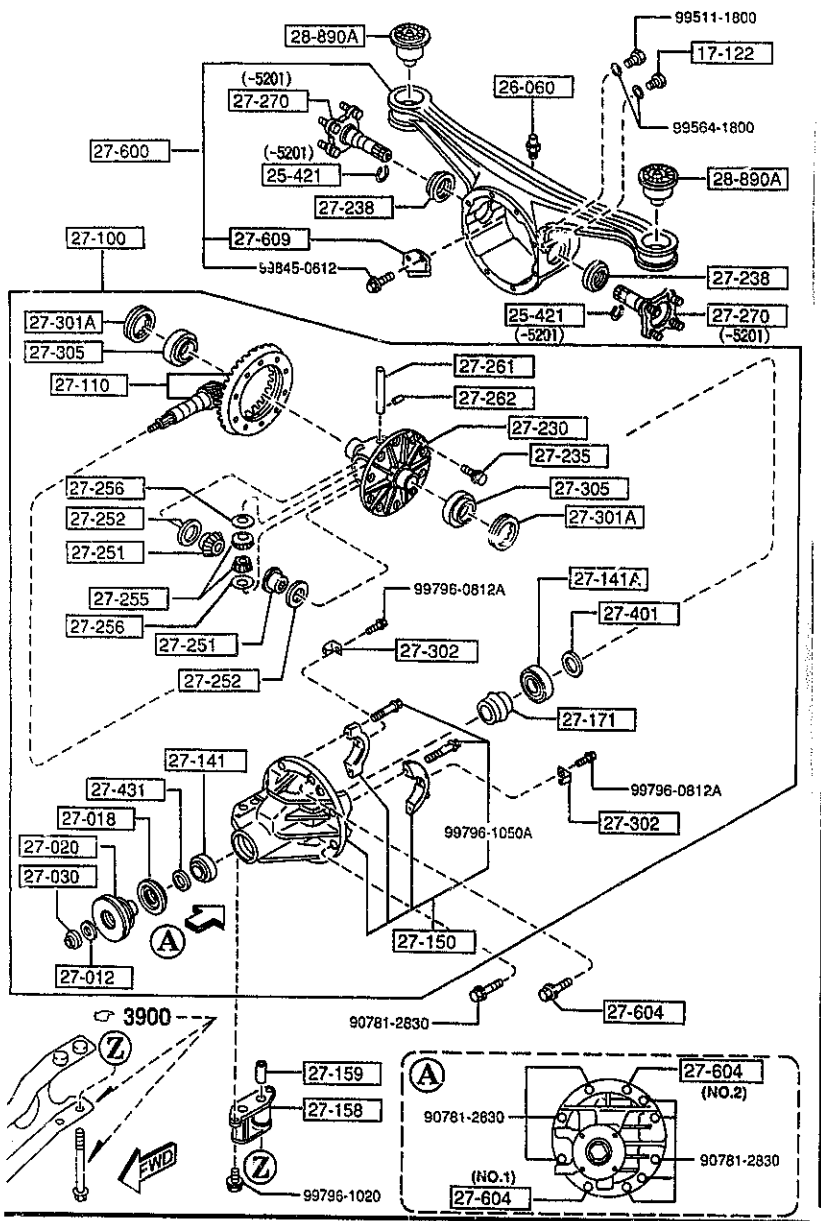

AUNA05

2710 -5 * REAR DIFFERENTIALS
(NORMAL DIFF.)

PART NO.	QTY	MODEL/RESTRICTION	MODEL/RESTRICTION	MODEL/RESTRICTION	FROM-TO
27-604		BOLT,CARRIER			
M053-27-604	1	(ILLUST. NO.1)			
M053-27-605	1	(ILLUST. NO.2)			
27-609		PLATE,BAFFLE-DIFF CASING			
M0A1-27-609A	1				
28-890A		RUBBER,SUB FRAME MTG			
NA01-28-890	2				

CAT. AUNA05-04

1997-07

2710 A REAR DIFFERENTIALS (LIMITED SLIP DIFF.)

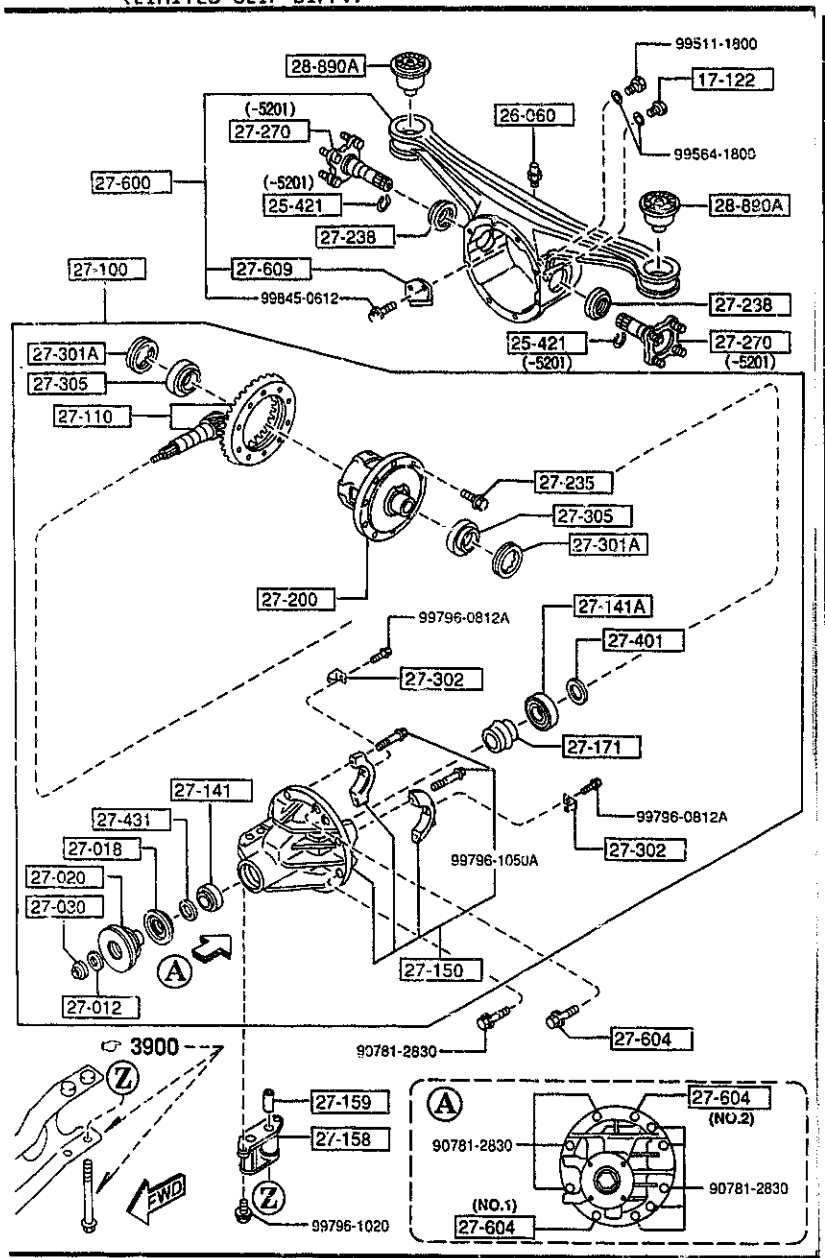

AUNA05

2710 A-1 REAR DIFFERENTIALS (LIMITED SLIP DIFF.)

PART NO.	QTY	MODEL/RESTRICTION	MODEL/RESTRICTION	MODEL/RESTRICTION	FROM-TO
17-122		PLUG,MAGNET			
0810-17-121	1				
25-421		CLIP			
G003-25-421	2				-5201
26-060		BREATHER			
0730-26-060	1				
27-012		WASHER			
0223-27-012	1				
27-018		SEAL,OIL			
MA02-27-165	1				-5508
MA02-27-165A	1				5508-
27-020		FLANGE,COMPANION			
MA03-27-120	1				-5508
MA03-27-120A	1				5508-
27-030		NUT,LOCK			
0223-27-030	1				
27-100		DRIVING & DIFF.			
MM01-27-100A	1	('95 MODEL)			
MM03-27-100	1	('96 MODEL)			
27-110		GEAR SET,FINAL			
M068-27-110A	1	R=4.100			
27-141		BEARING,PINION			
0755-27-210	1				
27-141A		BEARING,PINION			
M025-27-210	1				
27-150		CARRIER,DIFFERENTIAL			
MA02-27-150 A (MA02-27-150A)	1				-6601
*MA02-27-150A	1				6601-

5201 NA35* -614193
5508 NA35* -620210
6601 NA3** -719621

CAT. AUNA05-04

1997-07

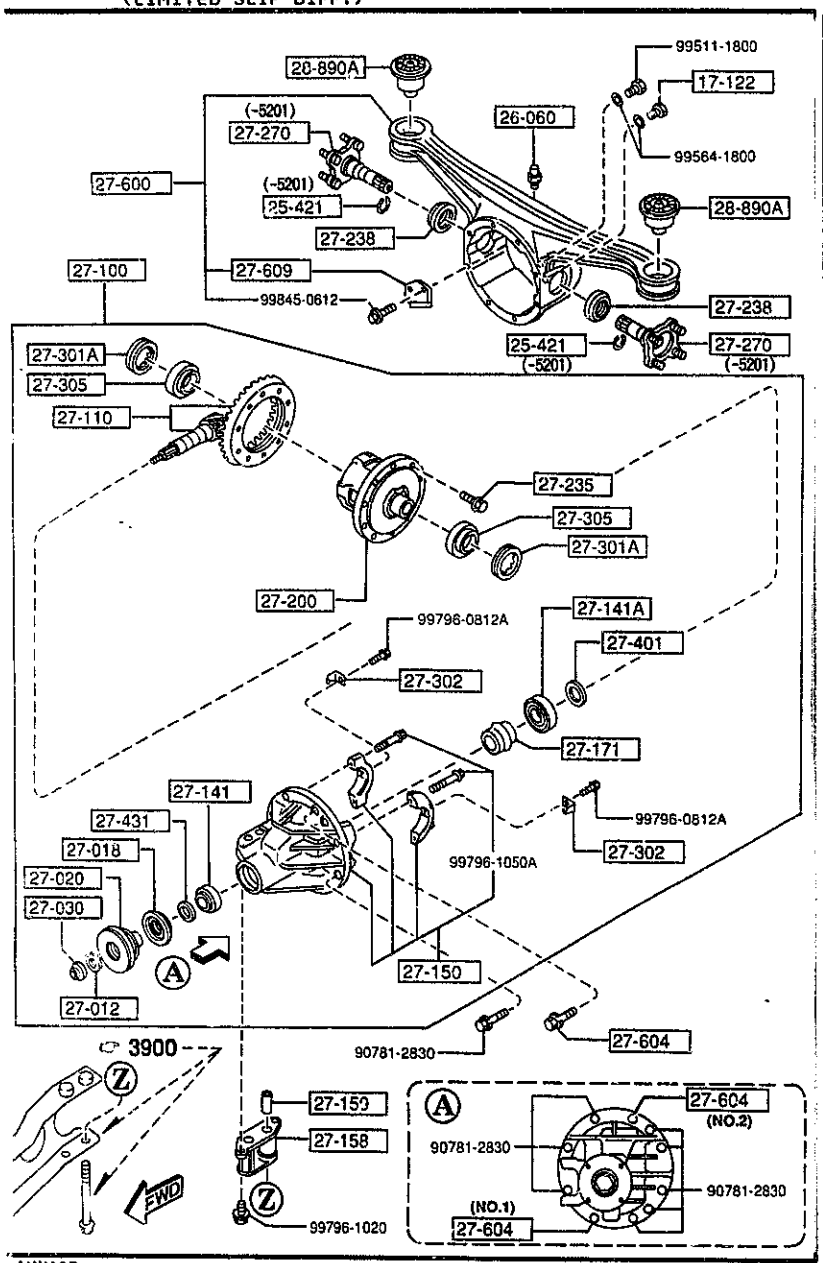

AUNA05

PART NO.	QTY	MODEL/RESTRICTION	MODEL/RESTRICTION	MODEL/RESTRICTION	FROM-TO
27-158		SPACE			
TD20-27-158A	1				
27-159		PIN,TUBULAR			
TD20-27-159A	1				-4901
MA02-27-159	1				4901-
27-171		PIECE,DISTANCE			
M035-27-171	1				
27-200		DIFFERENTIAL			
MM01-27-200	1	('95 MODEL)			
MM02-27-200 A (MM02-27-200A)	1	('96 MODEL)			-5731
MM02-27-200A	1	('96 MODEL)			5731-
27-235		BOLT,RING GEAR			
8051-27-235	10	D=10.0MM			
8051-27-236	10	D=10.2MM			
27-238		SEAL,OIL			
MA02-27-238	2				
27-270		YOKE,DIFFERENTIAL			
M055-27-270C	2				-5201
27-301A		SCREW,ADJUST			
0290-27-301	2				
27-302		PLATE,LOCK			
0290-27-302	2				
27-305		BEARING			
0221-27-350	2				
27-401		SPACER			
0223-27-401A	1	T=3.08MM			
0223-27-402A	1	T=3.11MM			

4901 NA35* -602618
5201 NA35* -614193
5731 NA3** -700786

CAT. AUNA05-04 1997-07

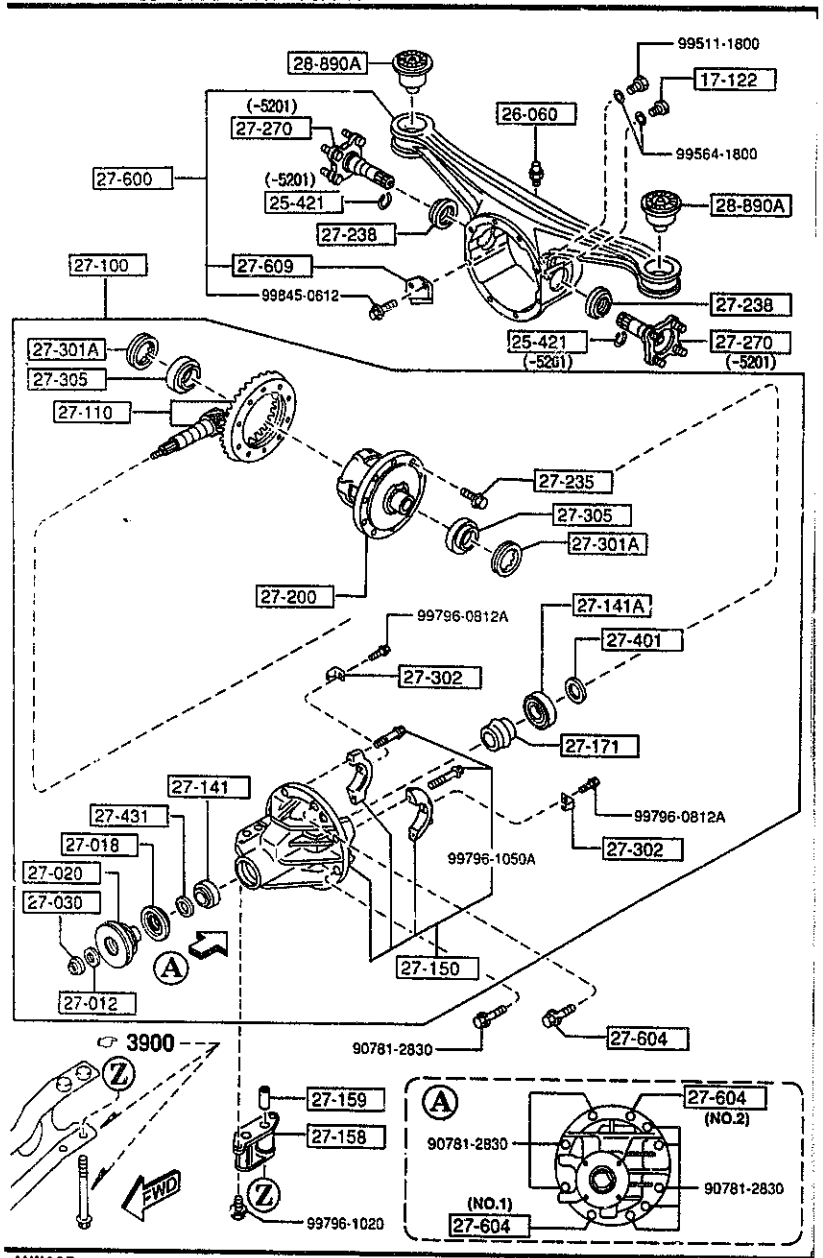

PART NO.	QTY	MODEL/RESTRICTION	MODEL/RESTRICTION	MODEL/RESTRICTION	FROM-TO
CONT'D					
0223-27-403A	1	T=3.14MM			
0223-27-404A	1	T=3.17MM			
0223-27-405A	1	T=3.2MM			
0223-27-406A	1	T=3.23MM			
0223-27-407A	1	T=3.26MM			
0223-27-408A	1	T=3.29MM			
0223-27-409A	1	T=3.32MM			
0223-27-411A	1	T=3.35MM			
0223-27-412A	1	T=3.38MM			
0223-27-413A	1	T=3.41MM			
0223-27-414A	1	T=3.44MM			
0223-27-415A	1	T=3.47MM			
0223-27-416	1	T=3.095MM			5301-
0223-27-417	1	T=3.125MM			5301-
0223-27-418	1	T=3.155MM			5301-
0223-27-419	1	T=3.185MM			5301-
0223-27-422	1	T=3.215MM			5301-
0223-27-423	1	T=3.245MM			5301-
0223-27-424	1	T=3.275MM			5301-
0223-27-425	1	T=3.305MM			5301-
0223-27-426	1	T=3.335MM			5301-
0223-27-427	1	T=3.365MM			5301-
0223-27-428	1	T=3.395MM			5301-

5301 NA35* -616742

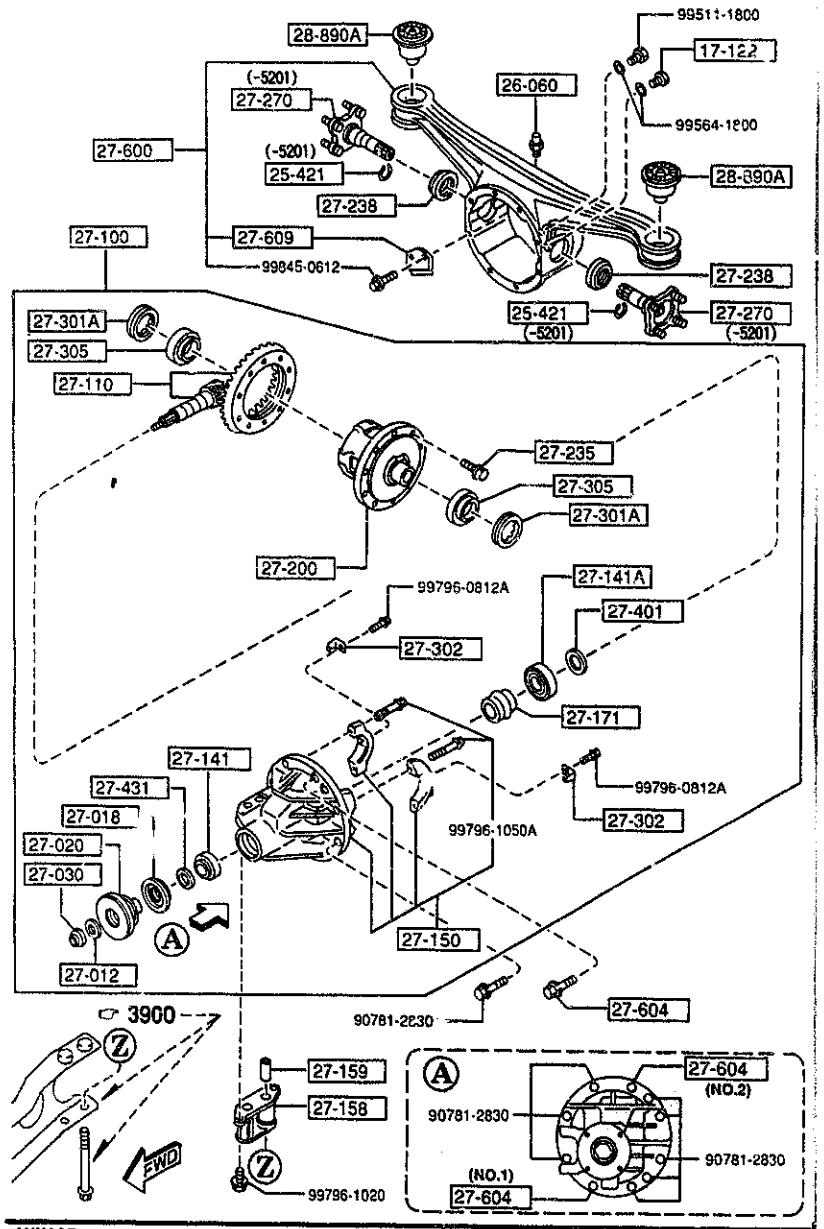

PART NO.	QTY	MODEL/RESTRICTION	MODEL/RESTRICTION	MODEL/RESTRICTION	FROM-TO
CONT'D					
0223-27-433	1	T=3.425MM			5301-
0223-27-434	1	T=3.455MM			5301-
| 27-431 |		SPACER			
PAD1-27-431	1				
| 27-600 |		CASING,DIFFERENTIAL			
MA02-27-600AN(MA02-27-600A)	1				-5201
MA02-27-600A	1				5201-
| 27-604 |		BOLT,CARRIER			
M053-27-604	1	(ILLUST. NO.1)			
M053-27-605	1	(ILLUST. NO.2)			
| 27-609 |		PLATE,BAFFLE-DIFF CASING			
M0A1-27-609A	1				
| 28-890A |		RUBBER,SUB FRAME MTG			
NA01-28-890	2				

5201 NA35* -614193
5301 NA35* -616742

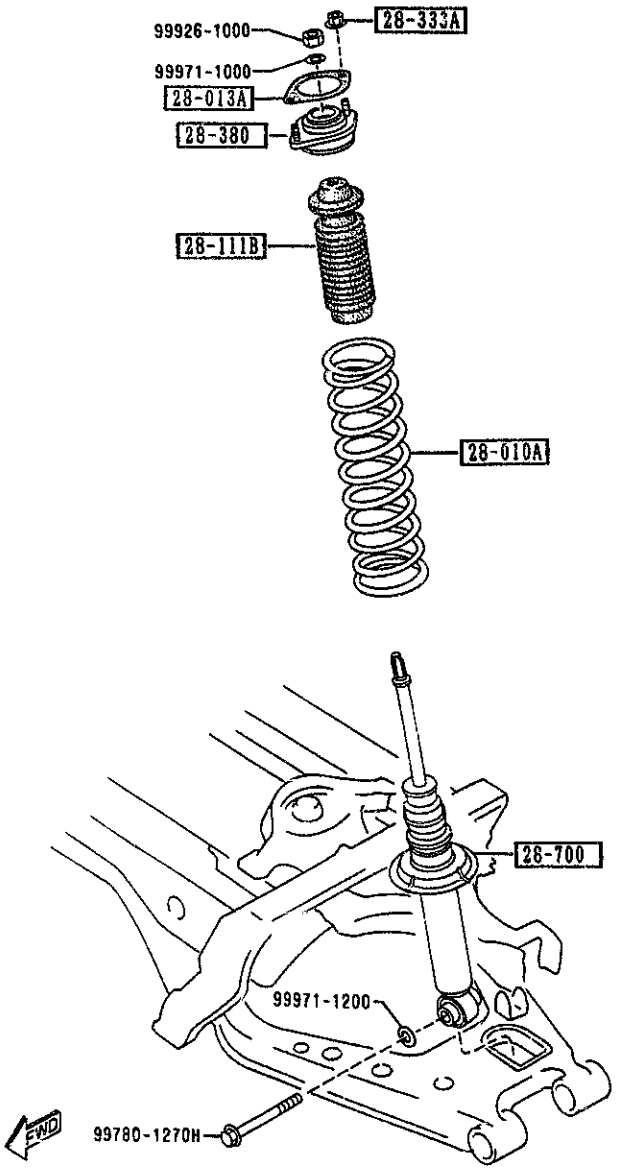

PART NO.	QTY	MODEL/RESTRICTION	MODEL/RESTRICTION	MODEL/RESTRICTION	FROM-TO
28-010A		SPRING,COIL-REAR			
NA01-28-011C	2	((EXC.BILSTEIN DAMP.)>(MT))			
NA03-28-011A	2	((EXC.BILSTEIN DAMP.)>(AT))			
N021-28-011	2	(BILSTEIN DAMP.)			
28-013A		SHEET,RUBBER			
0030-28-013A	2				
28-111B		STOPPER,BUMP			
NA01-28-111	2	(EXC.BILSTEIN DAMP.)			
N021-34-111	2	(BILSTEIN DAMP.)			
28-333A		NUT,FLANGE			
H001-28-333	4				
28-380		RUBBER,MOUNTING			
NA01-28-380B	2				
28-700		DAMPER,REAR			
N018-28-700B	2	(EXC.BILSTEIN DAMP.)			
N023-28-700A A (N023-28-700B)	2	(BILSTEIN DAMP.)			-5804
N023-28-700B	2	(BILSTEIN DAMP.)			5804-

5804 NA3** -701237

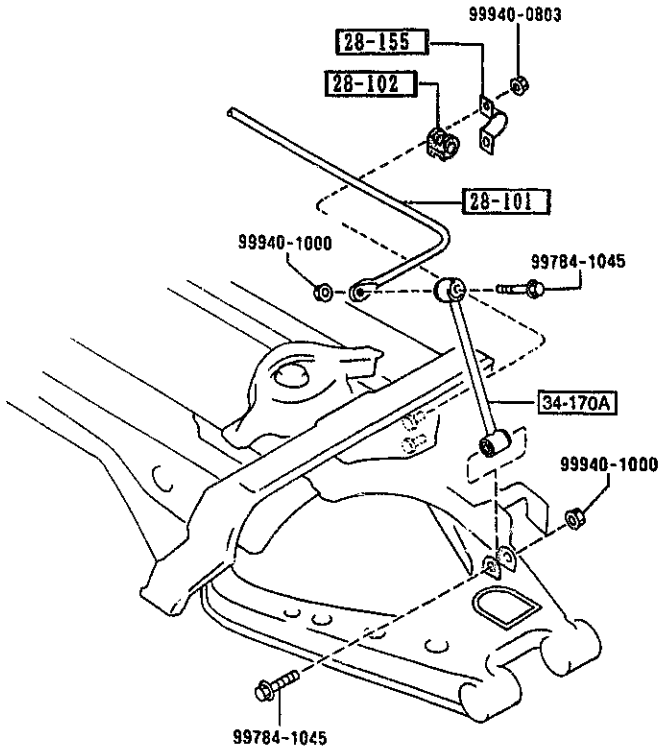

2810 -1 * REAR STABILIZER

PART NO.	QTY	MODEL/RESTRICTION	MODEL/RESTRICTION	MODEL/RESTRICTION	FROM-TO
28-101		STABILIZER,RR			
N023-28-151	1				
28-102		BUSH,STABILIZER-RR			
N023-28-156	2				
28-155		PLATE,STABILIZER-RR			
FB01-28-155	2				
34-170A		LINK,CONTROL-STAB			
NA01-34-170	2				

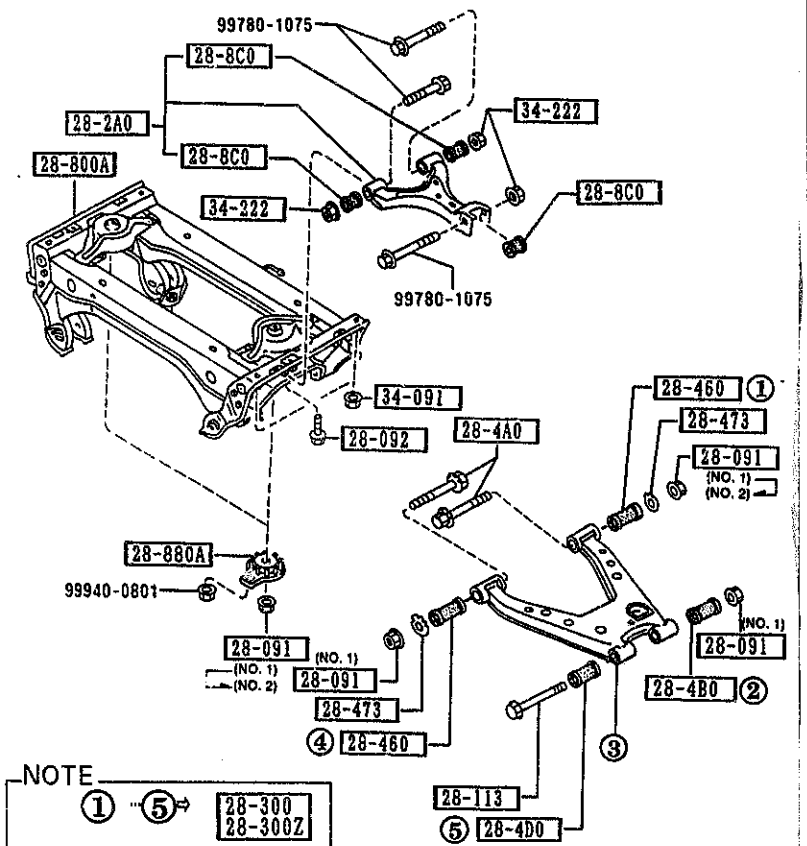

2830 -1 REAR LOWER ARMS & SUB FRAME

PART NO.	QTY	MODEL/RESTRICTION	MODEL/RESTRICTION	MODEL/RESTRICTION	FROM-TO
28-091		NUT			
B037-28-091	8	(ILLUST. NO.1)			-6401
B037-28-091	4	(ILLUST. NO.1)			6401-
B001-39-037B	4	(ILLUST. NO.2)			6401-
28-092		BOLT,CONTROL LINK			
NA01-28-092	2				
28-113		BOLT			
NA01-28-113	2				
28-2A0		ARM,UPPER-REAR			
NA01-28-2A0B	2				
28-300		ARM(R),LOWER-REAR			
NA01-28-300	1				
28-300Z		ARM(L),LOWER-REAR			
NA01-28-350	1				
28-4A0		BOLT,ADJUST			
NA01-28-4A0	4				
28-4B0		BUSHING,RUBBER-LOWER ARM			
NA01-28-4B0	2				
28-4D0		BUSHING,RUBBER-LOWER ARM			
NA01-28-4D0	2				
28-460		BUSHING,LOWER ARM			
NA01-28-460	4				
28-473		PLATE,CAM-SUB FRAME			
NA01-28-473	4				-6401
*NA80-28-473	4				6401-
28-8C0		BUSHING,RUBBER			
NA01-28-8C0B	6				
28-800A		MEMBER,CROSS			

6401 NA3** -717787

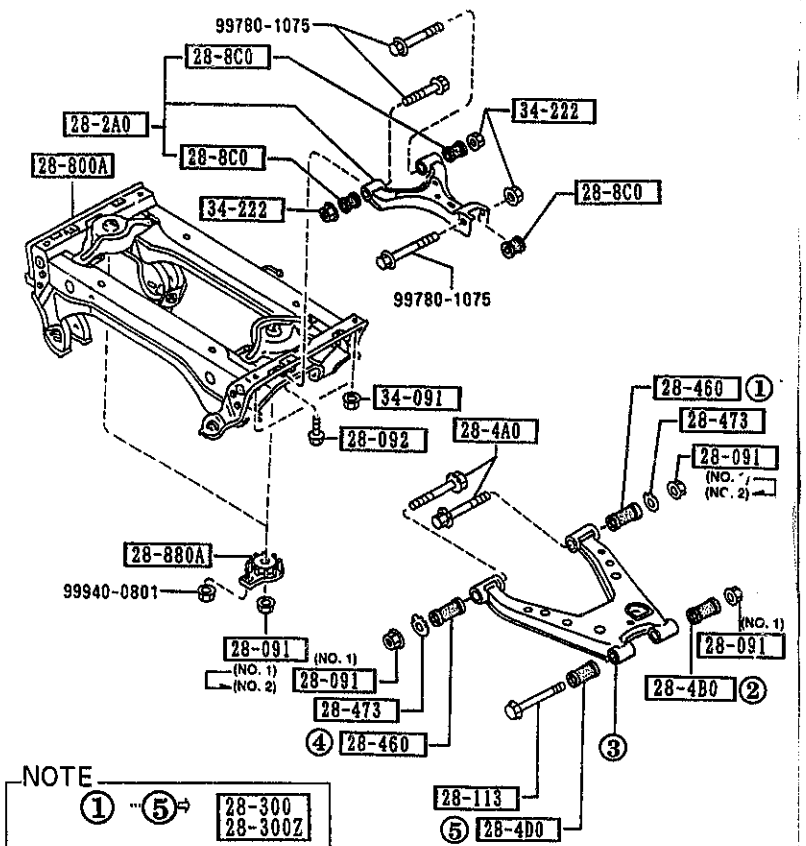

NOTE

① ··· ⑤ 28-300 28-300Z

THE D-CODE OF 28-300 28-300Z CONSISTS OF FIGURE NUMBERS ① THROUGH ⑤.

FWD

PART NO.	QTY	MODEL/RESTRICTION	MODEL/RESTRICTION	MODEL/RESTRICTION	FROM-TO
CONT'D					
NA75-28-800	1				
28-880A		WASHER,STOP			
NA01-28-880B	2				
34-091		NUT			
FB01-34-091	4				
34-222		NUT			
8871-34-222	6				

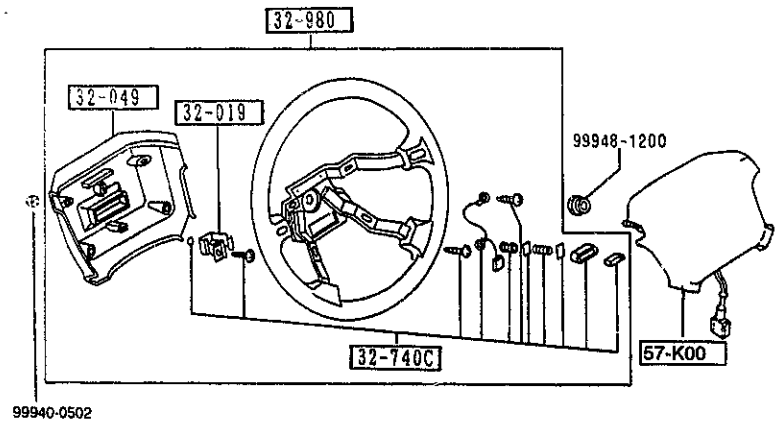

3200 -1 * STEERING WHEEL

PART NO.	QTY	MODEL/RESTRICTION	MODEL/RESTRICTION	MODEL/RESTRICTION	FROM-TO
32-019		BRACKET,COUPLER			
NA01-32-019	1				
32-049		COVER,WHEEL CORE			
NA01-32-049	1				
32-740C		PARTS SET,ST. WHEEL			
NA01-32-750	1				
32-980		BOSS,STEERING WHEEL			
NA01-32-980C	1	BASE, R-PKG, (URETHANE) ('95 MODEL)			
NA01-32-980D	1	BASE, R-PKG, (URETHANE) ('96 MODEL)			
NA02-32-980C	1	M-25-ED, P.E.GR, L-PKG, PKG-A, PKG-B, PKG-C, PKG-C, PKG-B, (LEATHER) ('95 MODEL)			
NA02-32-980D	1	M-25-ED, P.E.GR, L-PKG, PKG-A, PKG-B, PKG-C, PKG-C, PKG-B, (LEATHER) ('96 MODEL)			
57-K00		MODULE,AIR BAG			
NB11-57-K00	1				
00 INT-		NA3 NA5 BLACK			

3210 STEERING COLUMN & SHAFTS

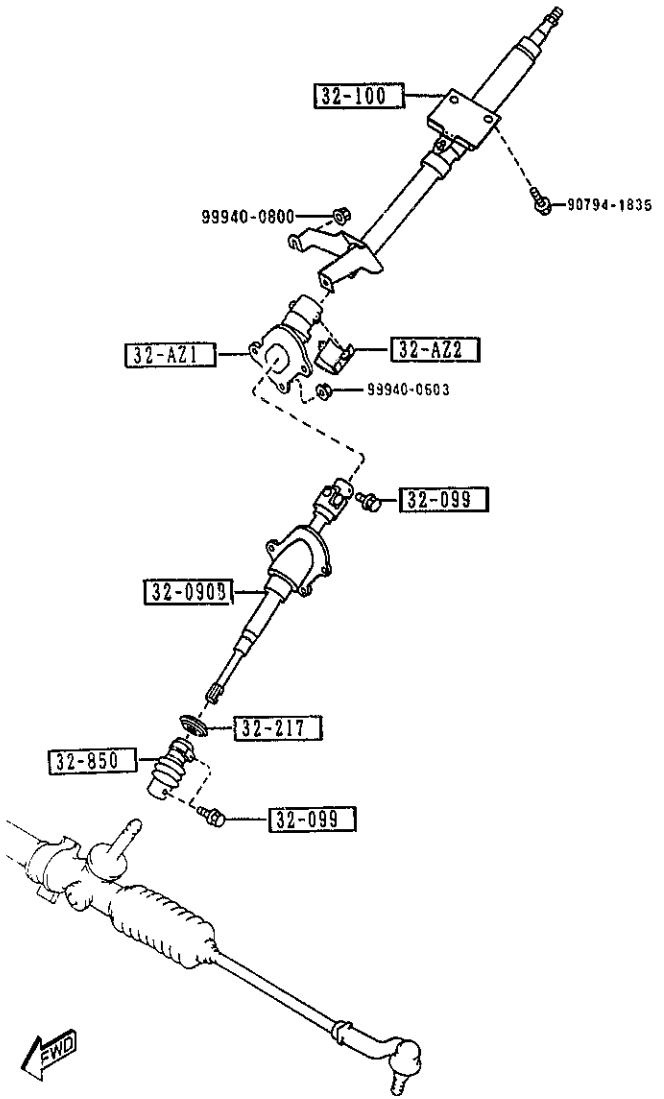

AUNA05

3210 -1 * STEERING COLUMN & SHAFTS

PART NO.	QTY	MODEL/RESTRICTION	MODEL/RESTRICTION	MODEL/RESTRICTION	FROM-TO
32-AZ1		COVER,JOINT-UPPER			
NA75-32-AZ1	1				
32-AZ2		COVER,JOINT-LOWER			
NA01-32-AZ2A	1				
32-090B		SHAFT,INTERMED.			
NA01-32-090C	1	BASE, R-PKG, (W/O POWER STEERING)			
NA02-32-090C	1	M-25-ED, P.E.GR, L-PKG, PKG-A, PKG-B, PKG-C, (W/POWER STEERING)			
32-099		BOLT,SHAFT			
B455-32-099	3				
32-100		SHAFT,ENGY.ABSORBER			
NA75-32-100A	1				
32-217		GROMMET			
NA01-32-217	1				
32-850		JOINT,STEERING			
NA01-32-850A	1				-6301
*NA01-32-850B	1				6301-

6301 NASM -71[illegible]

CAT. AUNA05-04 1997-07

3220 STEERING GEAR
(W/O POWER STEERING)

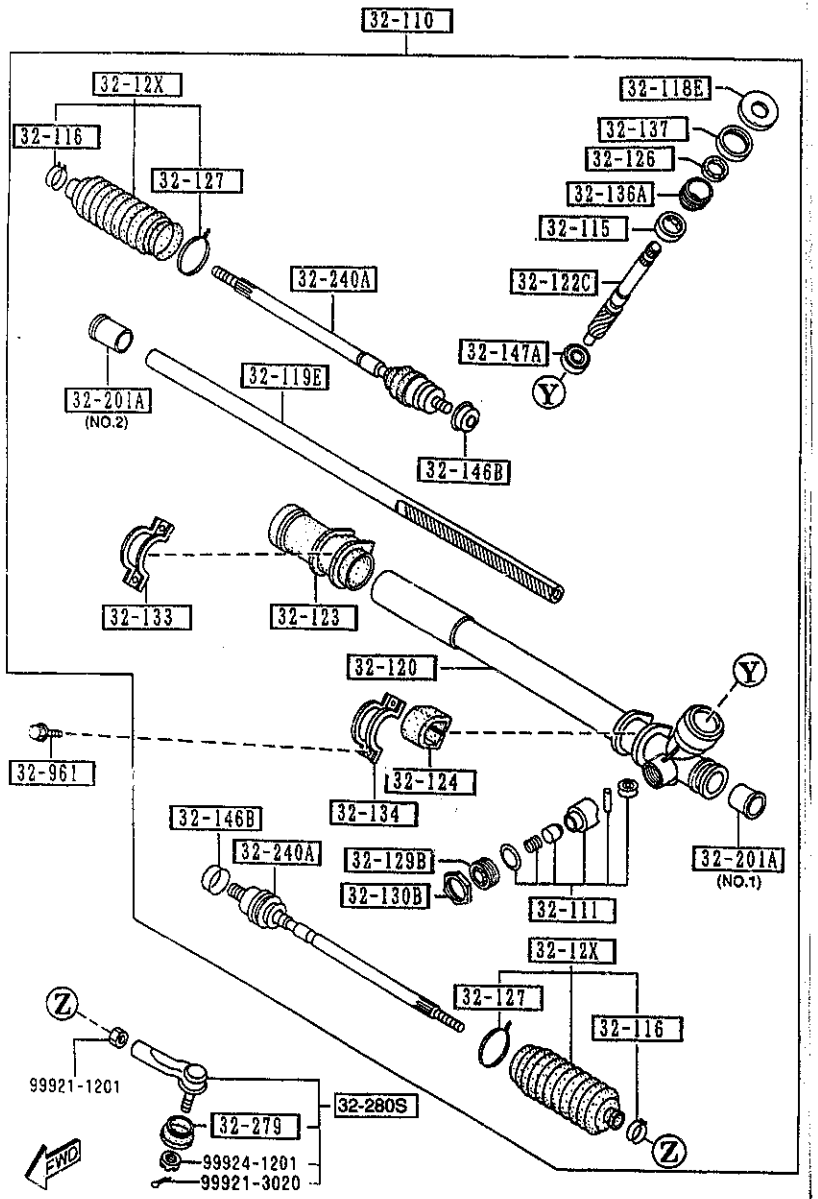

AUNA05

3220 -1 STEERING GEAR
(W/O POWER STEERING)

PART NO.	QTY	MODEL/RESTRICTION	MODEL/RESTRICTION	MODEL/RESTRICTION	FROM-TO
32-110		GEAR,STEERING			
NA01-32-110	1				
32-111		YOKE,SUPPORT			
GJ21-32-111	1				
32-115		BEARING,ST. GEAR			
G030-32-115	1				
32-116		CLIP,SEAL			
BF67-32-11[illegible]	[illegible]				
32-118E		COVER,DUST-ST. GEAR			
NA01-32-118	1				
32-119E		PACK,STEERING GEAR			
NA01-32-119	1				
32-12X		BOOT SET,ST. GEAR			
NA01-32-12X	2				
32-120		HOUSING,GEAR			
NA01-32-120	1				
32-122C		PINION,STEERING GEAR			
NA01-32-122	1				
32-123		RUBBER,MOUNTING			
NA01-32-123	1				
32-124		RUBBER,MOUNTING			
NA01-32-124	1				
32-126		SEAL,SHAFT			
G030-32-126	1				
32-127		CLIP,WIRE			
G030-32-127	2				
32-129B		PLUG,PINION			
HE01-32-129	1				

CAT. AUNA05-04

1997 07

3220 STEERING GEAR
(W/O POWER STEERING)

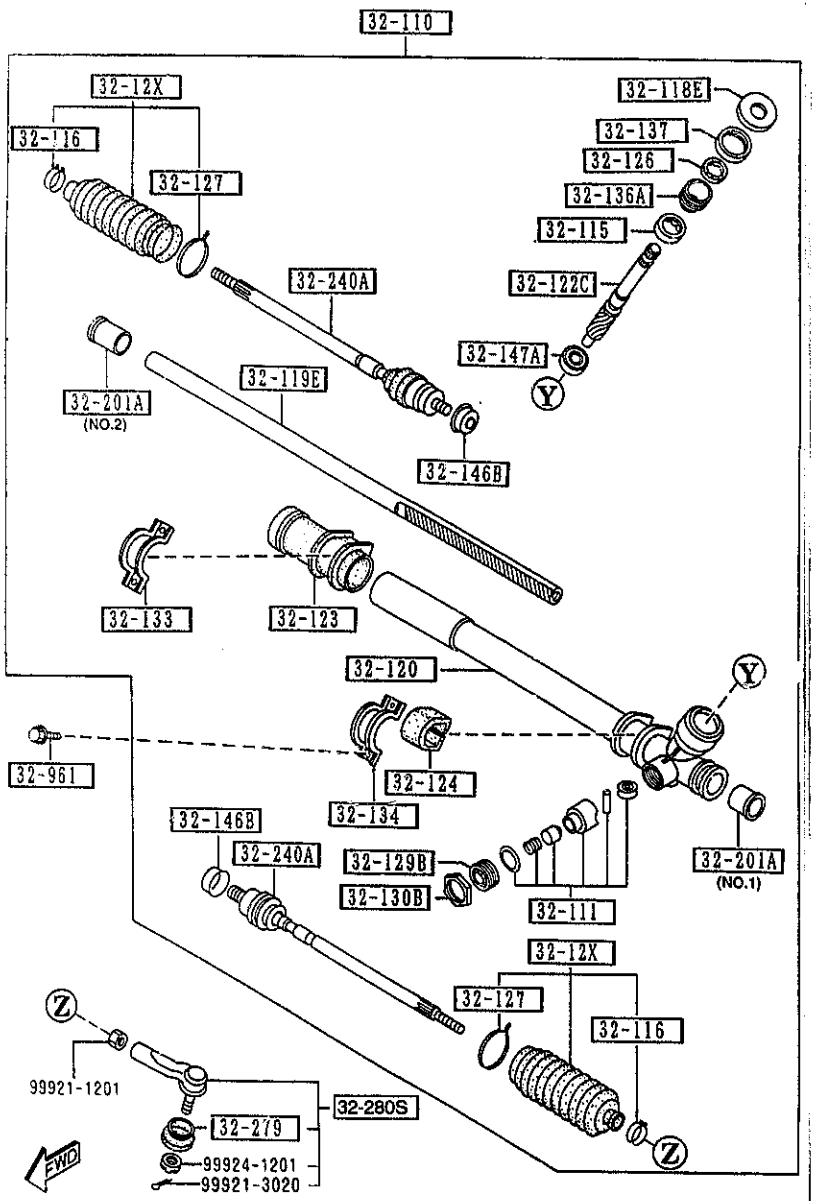

AUNA05

3220 -2 * STEERING GEAR
(W/O POWER STEERING)

PART NO.	QTY	MODEL/RESTRICTION	MODEL/RESTRICTION	MODEL/RESTRICTION	FROM-TO
32-130B S083-32-137	1	NUT,LOCK			
32-133 BC51-32-133	1	PLATE,CLAMP			
32-134 NA01-32-134	1	PLATE,CLAMP			
32-136A G030-32-136	1	COVER,REAR			
32-137 S030-32-137	1	NUT,LOCK			
32-146B HA14-32-146	2	WASHER			
32-147A G030-32-147	1	BEARING,PINION			
32-201A HE01-32-201	1	BUSHING,RACK-ST. GEAR (ILLUST. NO.1)			
HE09-32-201	1	(ILLUST. NO.2)			
32-240A NA01-32-240	2	JOINT,BALL			
32-279 B455-32-279	2	SEAL,DUST-BALL JOINT			
32-280S 8AN1-32-280	2	JOINT SET,BALL			
32-961 G030-32-961	4	BOLT			

CAT. AUNA05-04 1997-07

('95 MODEL)

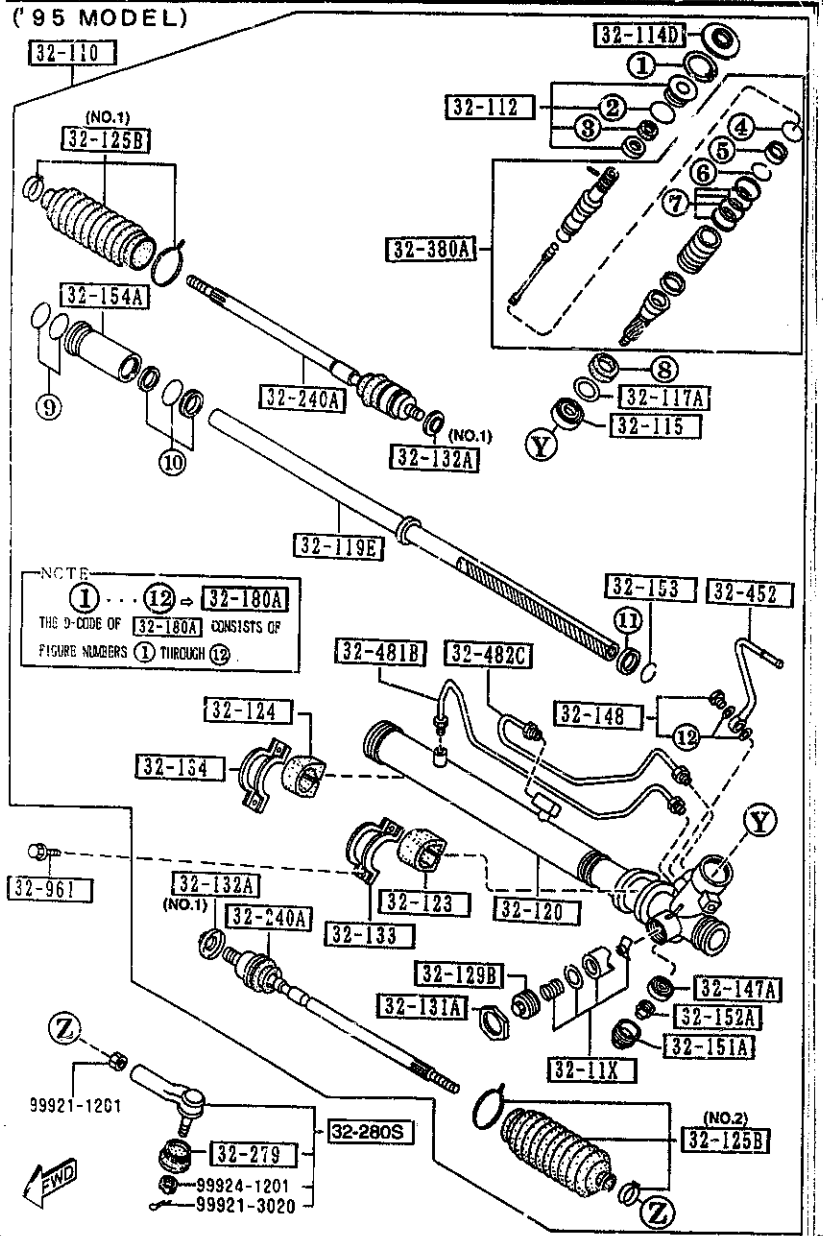

AUNA05

('96 MODEL)

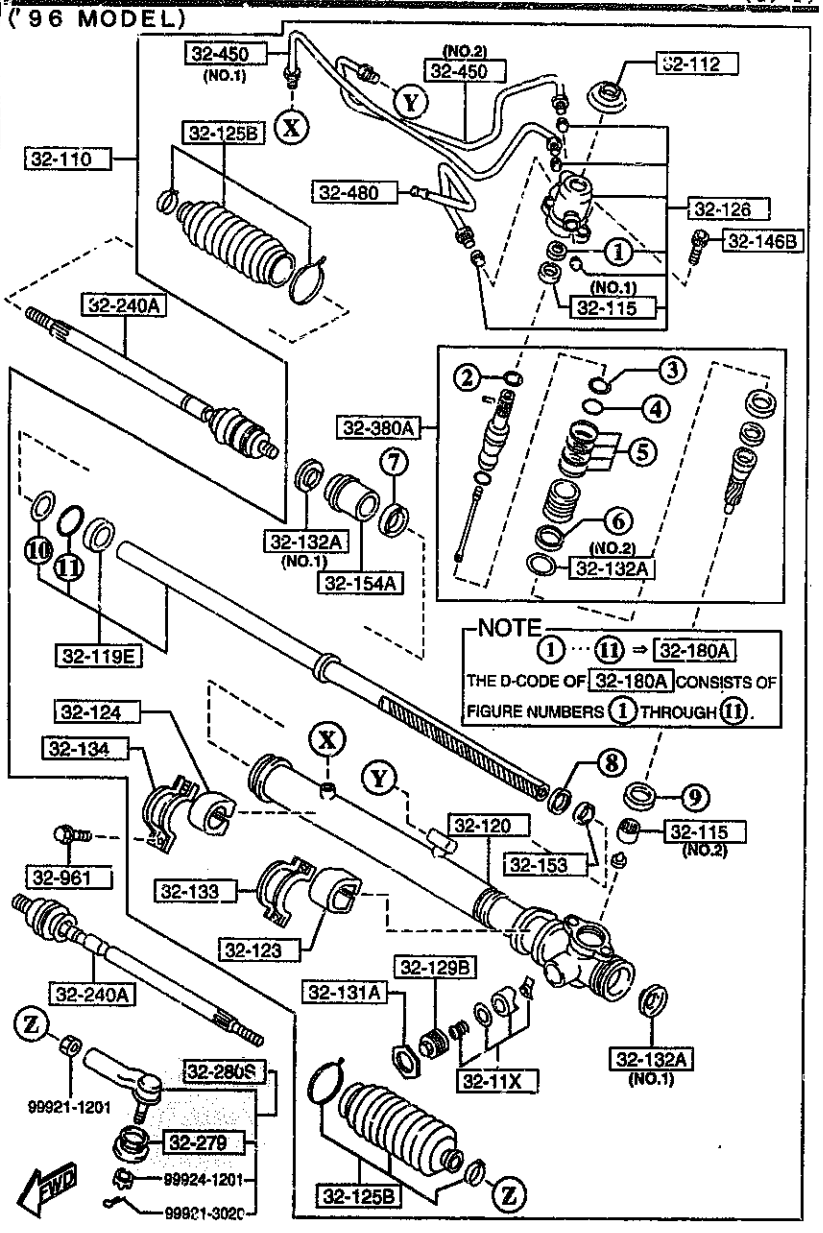

AUNA05

3220 A STEERING GEAR
(W/ POWER STEERING) (1/1)

('95 MODEL)

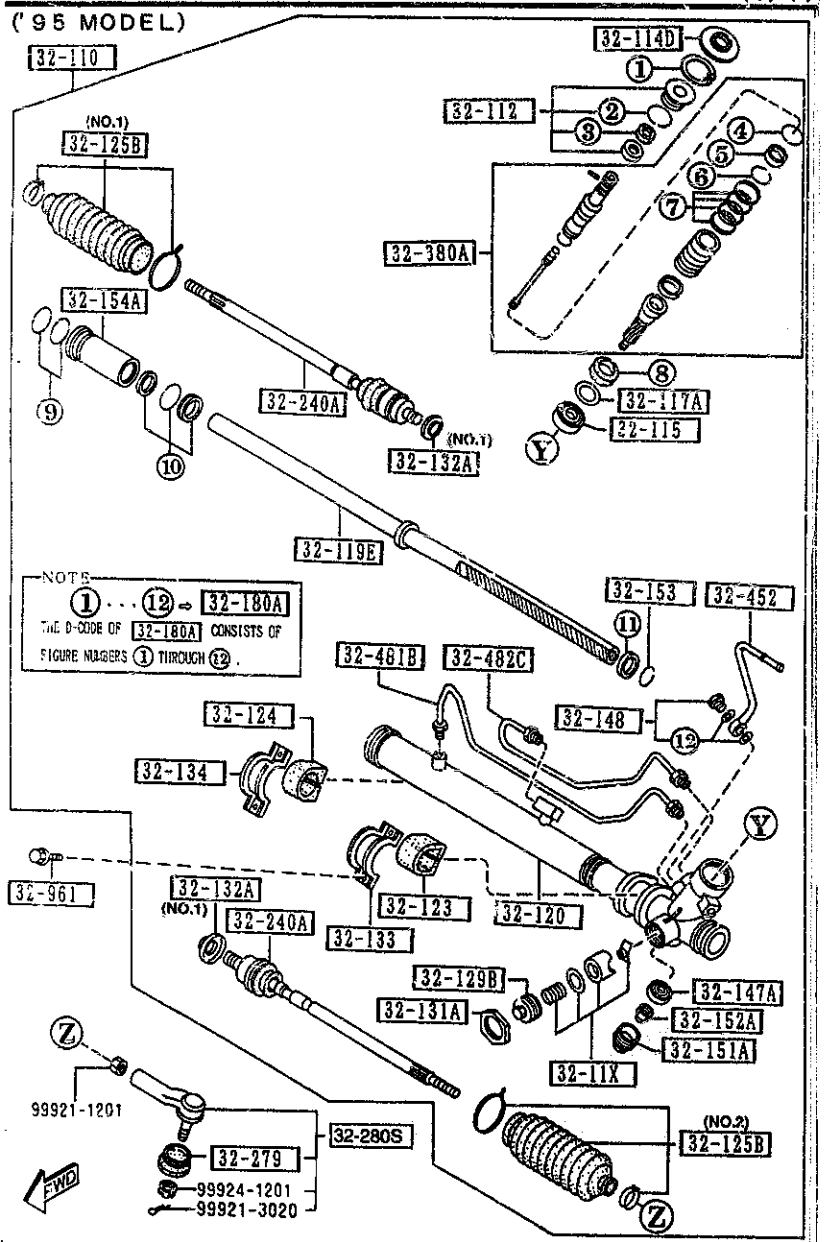

AUNA05

3220 A-1 STEERING GEAR
(W/POWER STEERING)

PART NO.	QTY	MODEL/RESTRICTION	MODEL/RESTRICTION	MODEL/RESTRICTION	FROM-TO
32-11X		YOKE SET,SUPPORT-ST. GEAR			
NA02-32-11X	1				
32-110		GEAR,STEERING			
NA02-32-110	1	('95 MODEL)			
NB38-32-110B	1	('96 MODEL)			
32-112		COVER,DUST			
NA02-32-112	1	('95 MODEL)			
NB38-32-112	1	('96 MODEL)			
32-114D		COVER,DUST-ST. GEAR			
NA02-32-114	1	('95 MODEL)			
32-115		BEARING,ST. GEAR			
NA02-32-115	1	('95 MODEL)			
NB38-32-115	1	(ILLUST. NO.1) ('96 MODEL)			
NB39-32-115	1	(ILLUST. NO.2) ('96 MODEL)			
32-117A		SPACER,STEERING GEAR			
NA02-32-121	1	('95 MODEL)			
32-119E		RACK,STEERING GEAR			
NA02-32-119	1	('95 MODEL)			
NB38-32-119	1	('96 MODEL)			
32-120		HOUSING,GEAR			
NA02-32-120	1	('95 MODEL)			
NB38-32-120	1	('96 MODEL)			
32-123		RUBBER,MOUNTING			
NA02-32-123	1				
32-124		RUBBER,MOUNTING			
NA02-32-124	1				
32-125B		BOOT,RACK			
NA02-32-125	1	(ILLUST. NO.1) ('95 MODEL)			

CAT. AUNA05-04 1997-07

('96 MODEL)

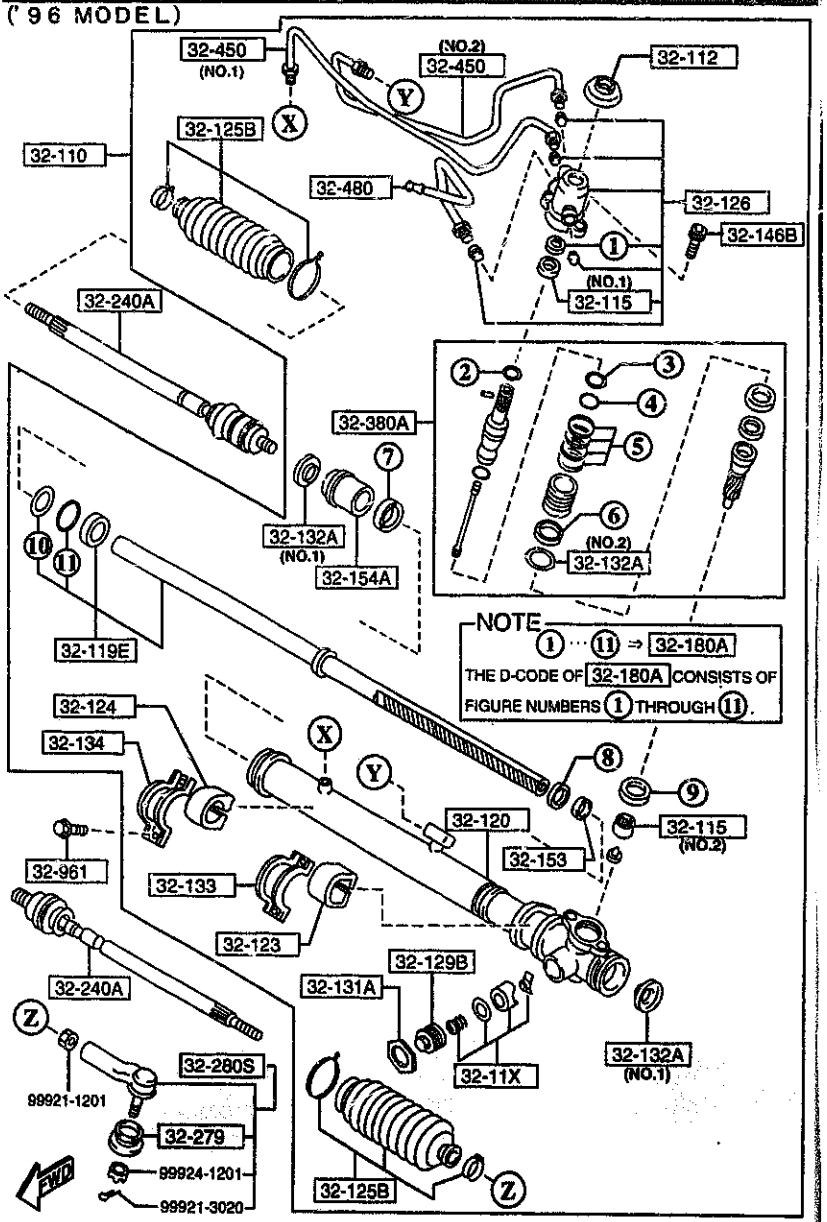

AUNA05

3220 A-2 STEERING GEAR
(W/POWER STEERING)

PART NO.	QTY	MODEL/RESTRICTION	MODEL/RESTRICTION	MODEL/RESTRICTION	FROM-TO
CONT'D					
NB38-32-125	2	('96 MODEL)			
NA02-32-135	1	(ILLUST. NO.2) ('95 MODEL)			
32-126		SEAL,SHAFT			
NB38-32-126	1	('96 MODEL)			
32-129B		PLUG,PINION			
NA02-32-129	1				
32-131A		NUT,LOCK-RACK			
NA02-32-131	1				
32-132A		WASHER			
NA02-32-126	2	(ILLUST. NO.1)			
NB38-32-132	1	(ILLUST. NO.2) ('96 MODEL)			
32-133		PLATE,CLAMP			
NA02-32-133	1	('95 MODEL)			
NB38-32-133	1	('96 MODEL)			
32-134		PLATE,CLAMP			
D002-32-134	1	('96 MODEL)			
NA02-32-134	1	('95 MODEL)			
32-146B		WASHER			
NB38-32-146	2	('96 MODEL)			
32-147A		BEARING,PINION			
NA02-32-147	1	('95 MODEL)			
32-148		EYE BOLT KIT,ST. GEAR			
D002-32-148	1	('95 MODEL)			
32-151A		PLUG,PINION-ST.GEAR			
NA02-32-151	1	('95 MODEL)			
32-152A		NUT,ADJUST			
NA02-32-152	1	('95 MODEL)			

CAT. AUNA05-04 1997-07

3220 A STEERING GEAR
(W/ POWER STEERING) (1/2)

('95 MODEL)

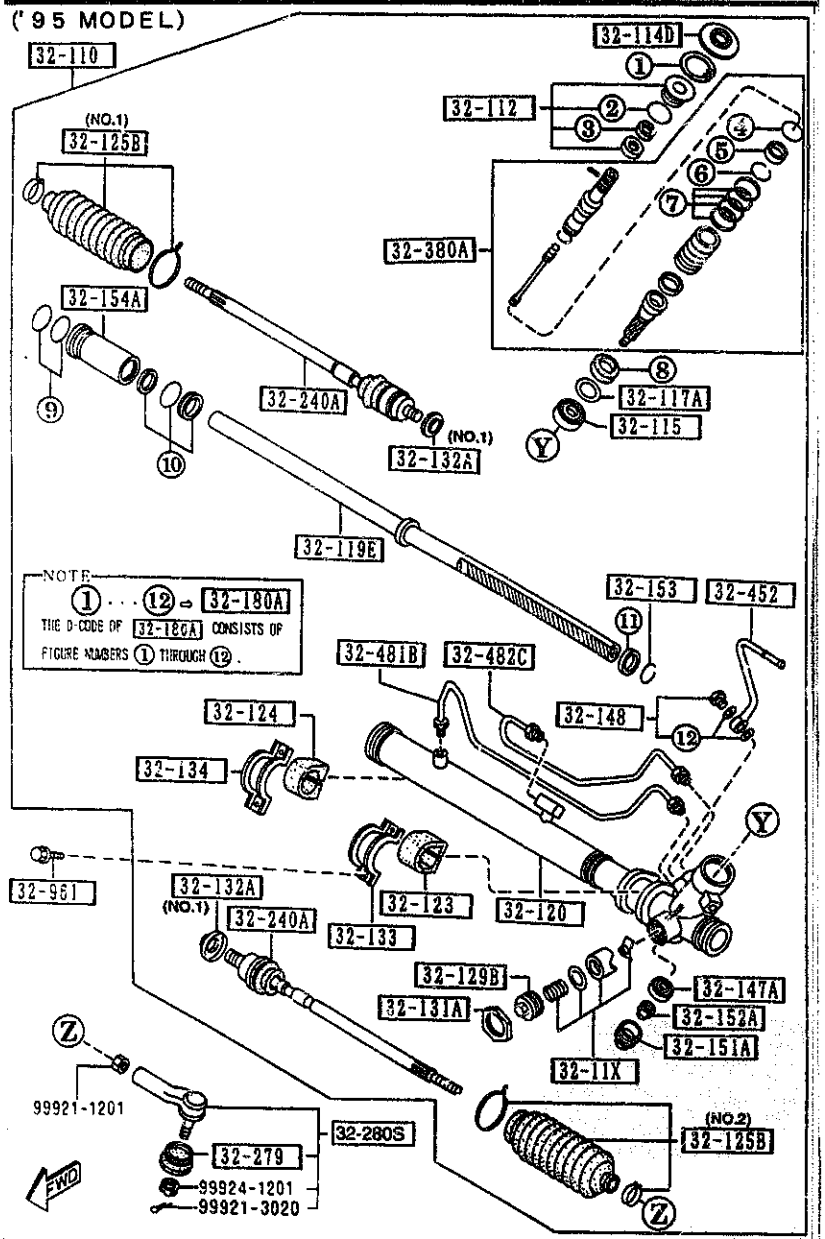

3220 A-3 STEERING GEAR
(W/POWER STEERING)

PART NO.	QTY	MODEL/RESTRICTION	MODEL/RESTRICTION	MODEL/RESTRICTION	FROM-TO
32-153		RING,BACK UP			
NA02-32-153	1				
32-154A		HOLDER,STEERING GEAR			
NA02-32-154	1	('95 MODEL)			
NB38-32-154	1	('96 MODEL)			
32-180A		SEAL KIT,ST. GEAR			
NA02-32-180	1	('95 MODEL)			
NB38-32-180	1	('96 MODEL)			
32-240A		JOINT,BALL			
NA02-32-240	2				
32-279		SEAL,DUST-BALL JOINT			
B455-32-279	2				
32-280S		JOINT SET,BALL			
8AN1-32-280	2				
32-380A		VALVE,ST. GEAR			
NA02-32-380	1	('95 MODEL)			
NB38-32-380	1	('96 MODEL)			
32-450		PIPE,PRESSURE			
NB38-32-450	1	(ILLUST. NO.1) ('96 MODEL)			
NB39-32-450	1	(ILLUST. NO.2) ('96 MODEL)			
32-452		PIPE'B',ST. GEAR			
NA02-32-452	1	('95 MODEL)			
32-480		PIPE,RETURN			
NB38-32-480A	1	('96 MODEL)			
32-481B		PIPE'A',CYLINDER			
NA02-32-481	1	('95 MODEL)			
32-482C		PIPE'B',CYLINDER			
NA02-32-482	1	('95 MODEL)			

('96 MODEL)

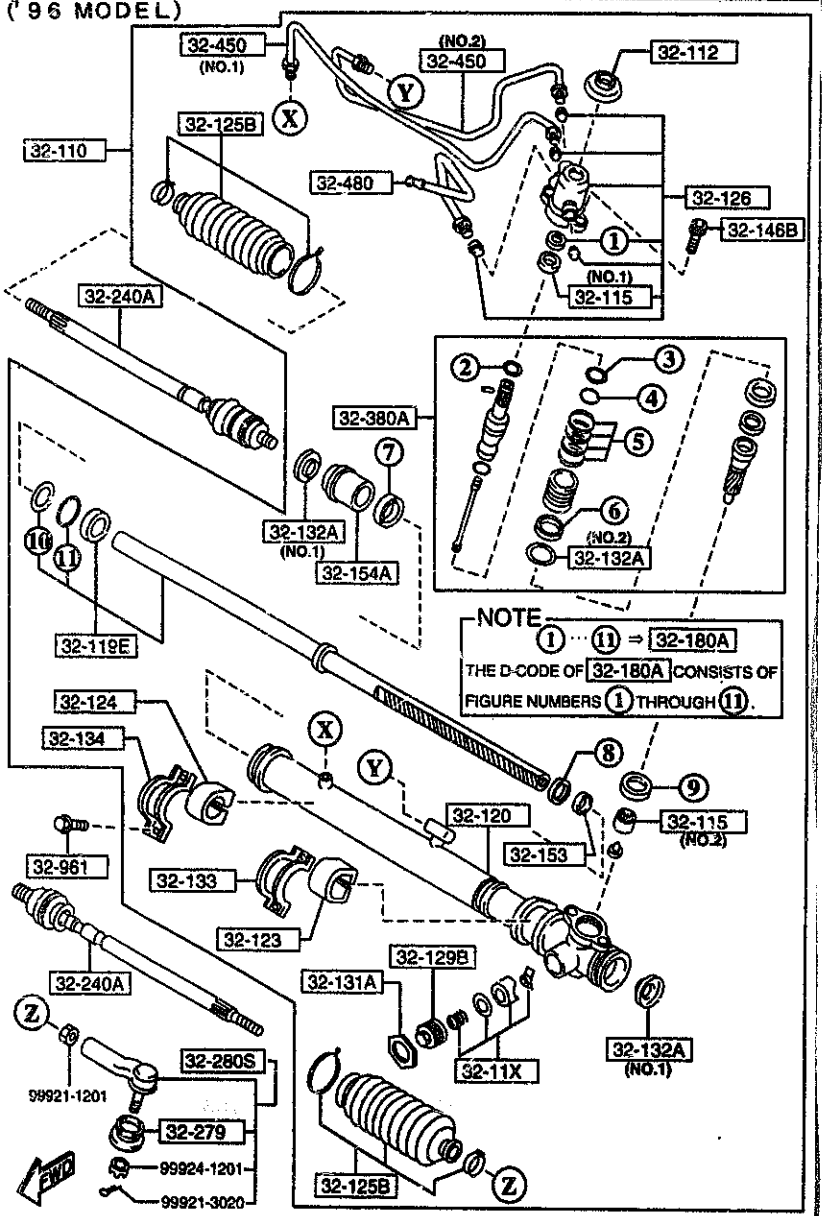

3220 A-4 * STEERING GEAR
(W/POWER STEERING)

PART NO.	QTY	MODEL/RESTRICTION	MODEL/RESTRICTION	MODEL/RESTRICTION	FROM-TO
32-961		BOLT			
GB30-32-961	4				

CAT. AUNA05-04 1997-07

('95 MODEL)

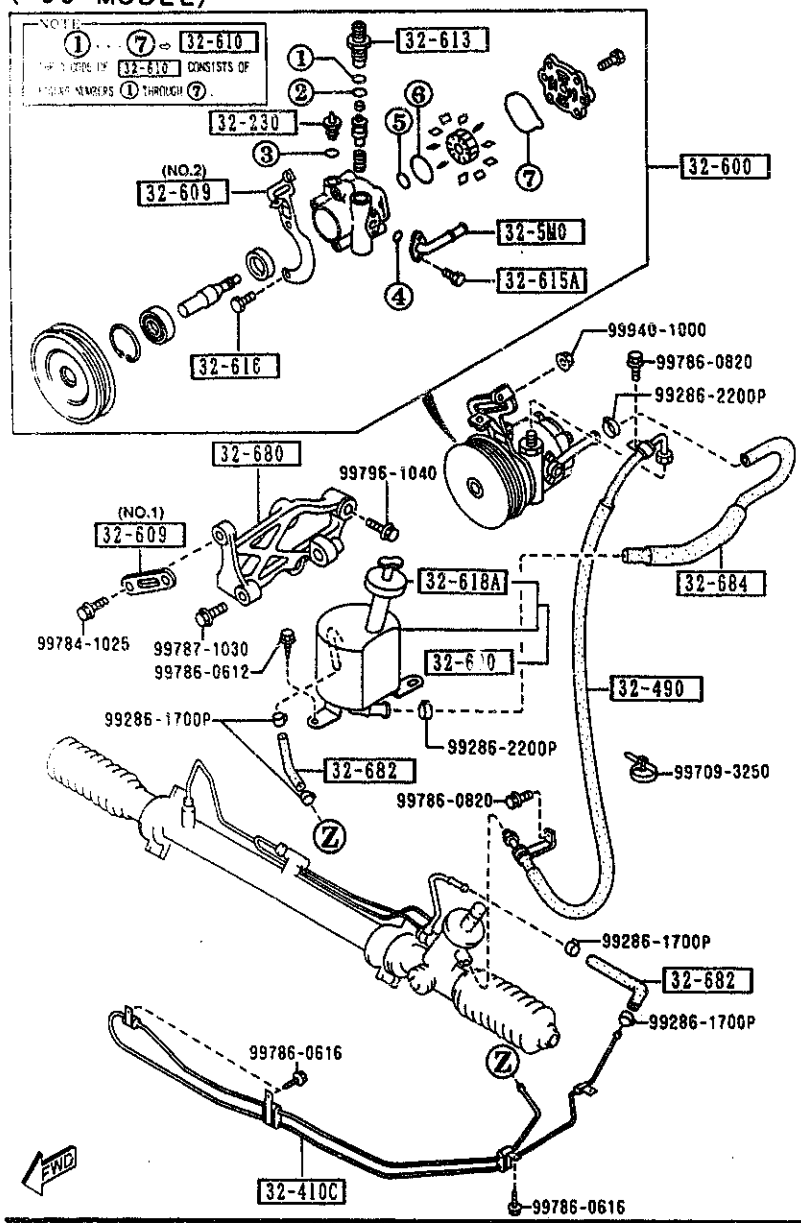

AUNA05

('96 MODEL)

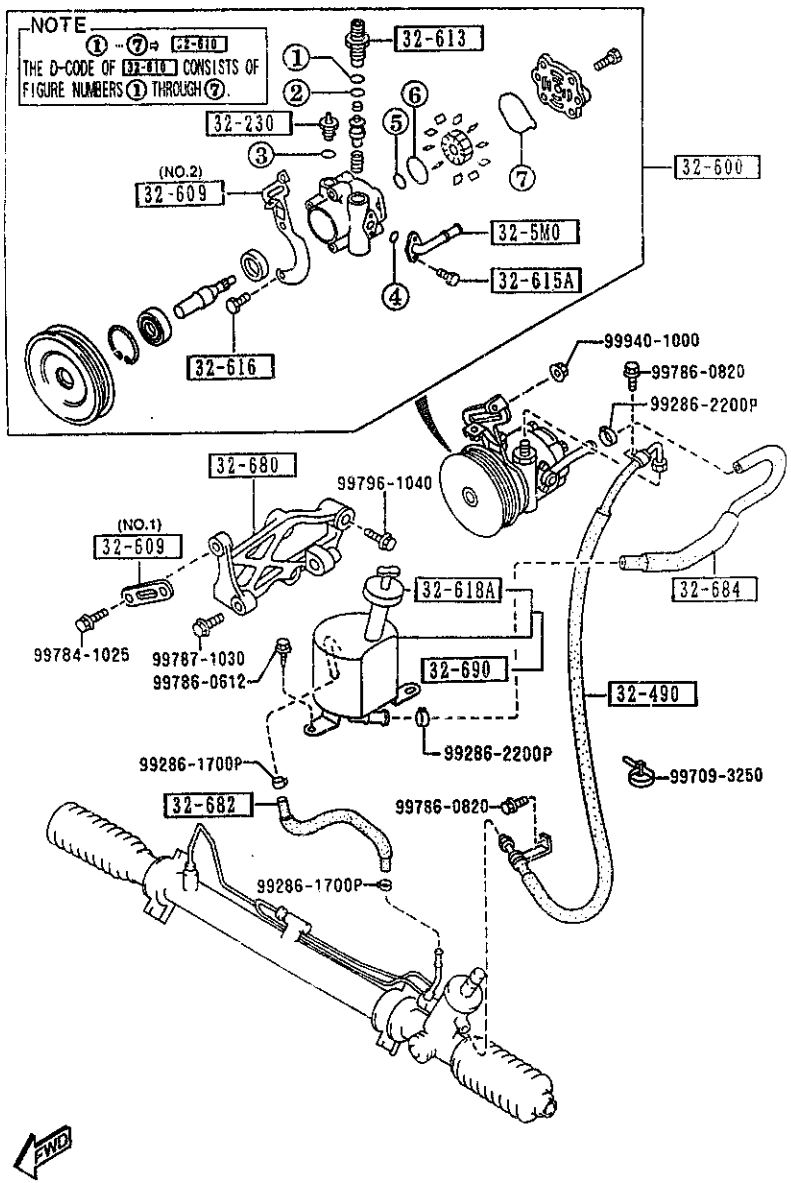

AUNA05

(95 MODEL)

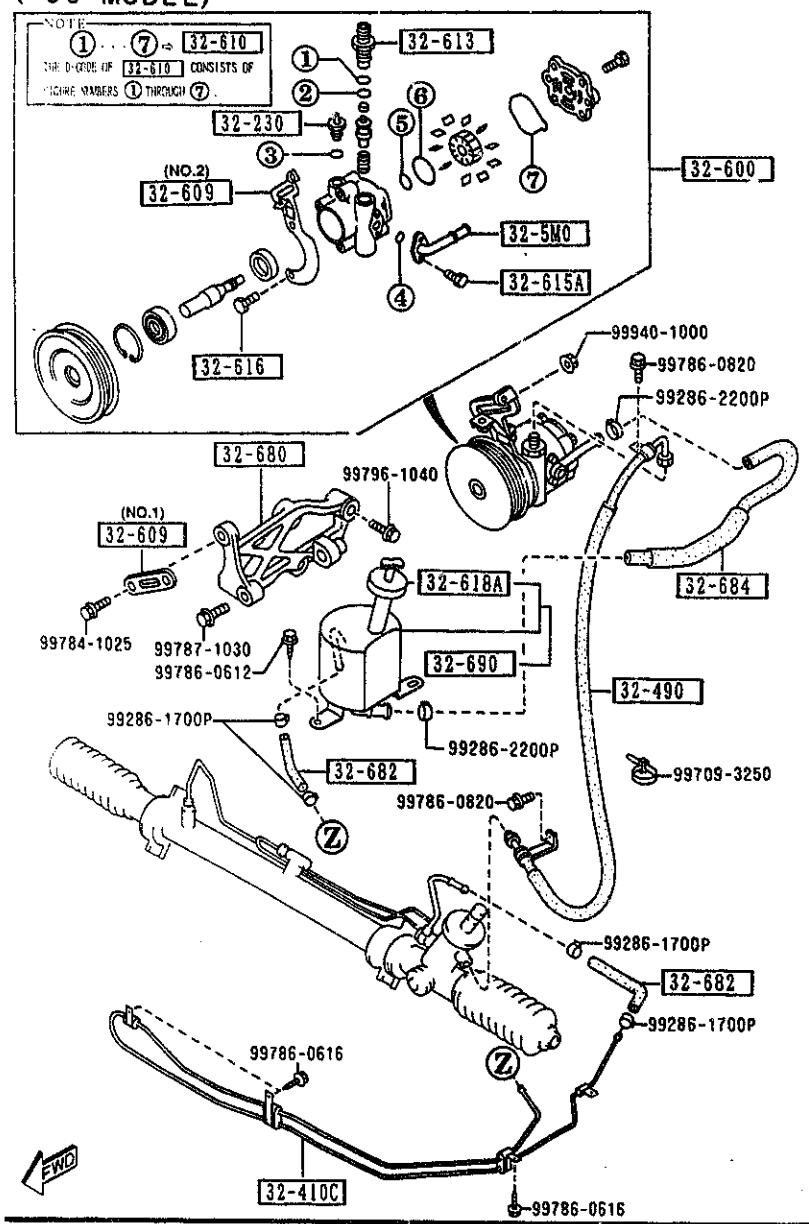

3240 -1 POWER STEERING SYSTEM

PART NO.	QTY	MODEL/RESTRICTION	MODEL/RESTRICTION	MODEL/RESTRICTION	FROM-TO
32-230		SENSOR,STEERING PRESSURE			
B456-32-230	1				-5901
B456-32-230A	1				5901-
32-410C		PIPE,RETURN			
NA02-32-410A	1	('95 MODEL)			
32-490		HOSE,PRESSURE			
NA02-32-490C	1				
32-5M0		PIPE,SUCTION			
N002-32-5M0	1				-5901
N002-32-5M0A	1				5901-
32-600		PUMP,VANE			
N002-32-600B AN(N002-32-600D)	1				-5901
N002-32-600D	1				5901-
32-609		BRACKET,VANE PUMP			
NA02-32-609	1	KURDISHI TEKKO (ILLUST. NO.1)			
N002-32-609	1	NIHON POWER STEERING (ILLUST. NO.2)			
32-610		SEAL KIT,VANE PUMP			
N002-32-610	1				-5901
N002-32-610A	1				5901-
32-613		NIPPLE,VANE PUMP			
N002-32-613	1				
32-615A		BOLT			
B456-32-615	2				
32-616		BOLT,VANE PUMP			
B456-32-616	2				
32-618A		CAP,VANE PUMP TANK			
NA02-32-691	1				

5901 NA3** -702989

('96 MODEL)

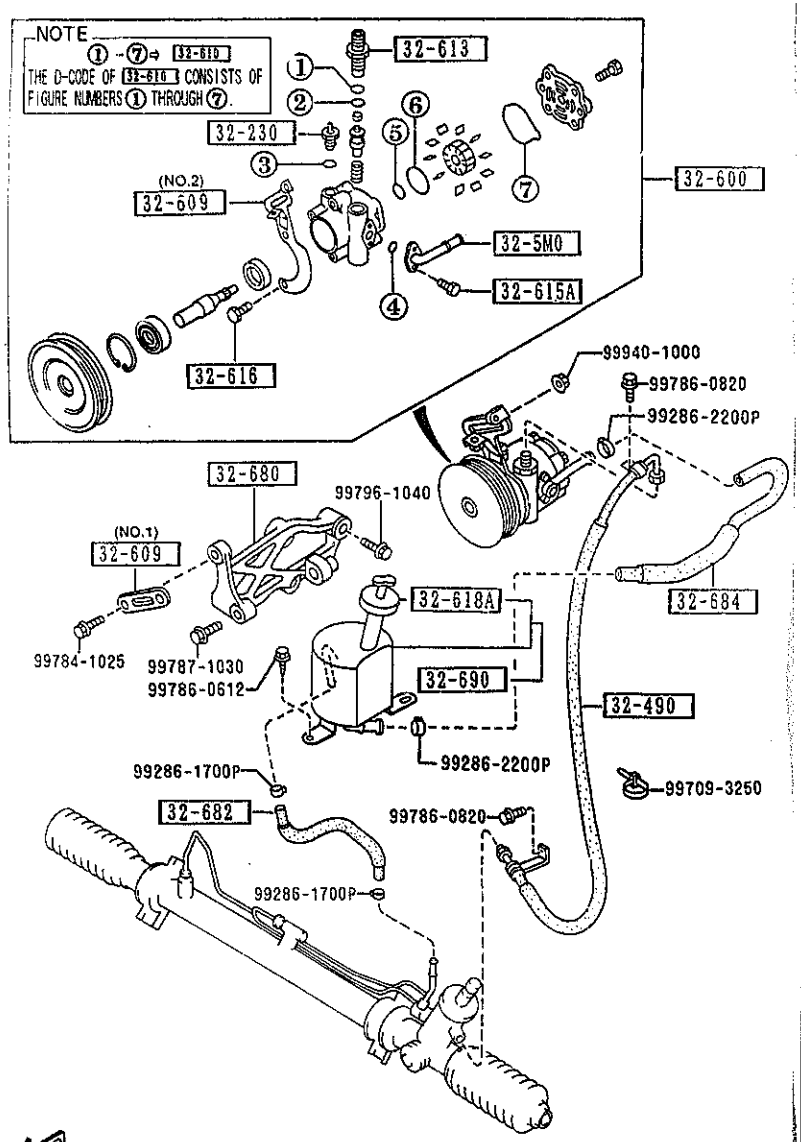

AUNA05

3240 -2 * POWER STEERING SYSTEM

PART NO.	QTY	MODEL/RESTRICTION	MODEL/RESTRICTION	MODEL/RESTRICTION	FROM-TO
32-680		BRACKET,VANE PUMP			
NA02-32-680	1				
32-682		HOSE,RETURN			
NA02-32-682	2	('95 MODEL)			
NB11-32-682	1	('96 MODEL)			
32-684		HOSE,RETURN			
NA02-32-684B	1				
32-690		TANK,VANE PUMP			
NA02-32-690A	1	('95 MODEL)			
NB11-32-690	1	('96 MODEL)			

3300 FRONT AXLE
(W/O ANTILOCK BRAKE)

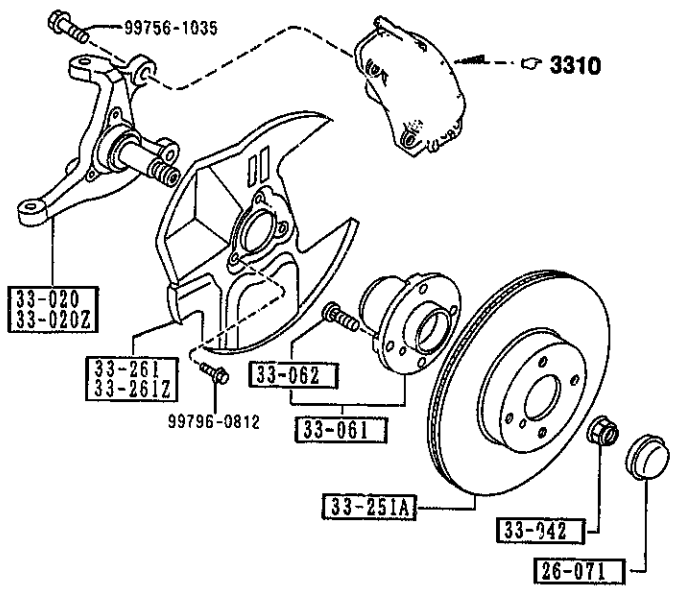

AUNA05

3300 -1 * FRONT AXLE
(W/O ANTILOCK BRAKE)

PART NO.	QTY	MODEL/RESTRICTION	MODEL/RESTRICTION	MODEL/RESTRICTION	FROM-TO
26-071		CAP,HUB			
B455-26-071	2				
33-020		KNUCKLE(R),STEERING			
NA01-33-021B	1				
33-020Z		KNUCKLE(L),STEERING			
NA01-33-031B	1				
33-042		NUT			
D06Y-33-042	2	W/WASHER			
33-061		HUB,WHEEL			
NA01-33-04X	2				
33-062		BOLT,HUB			
B455-33-062	8				
33-251A		PLATE,DISC			
NA75-33-25X	2				
33-261		COVER(R),DUST			
NA75-33-261	1				
33-261Z		COVER(L),DUST			
NA75-33-271	1				

CAT. AUNA05-04

1997-07

3300 A FRONT AXLE (W/ANTILOCK BRAKE)

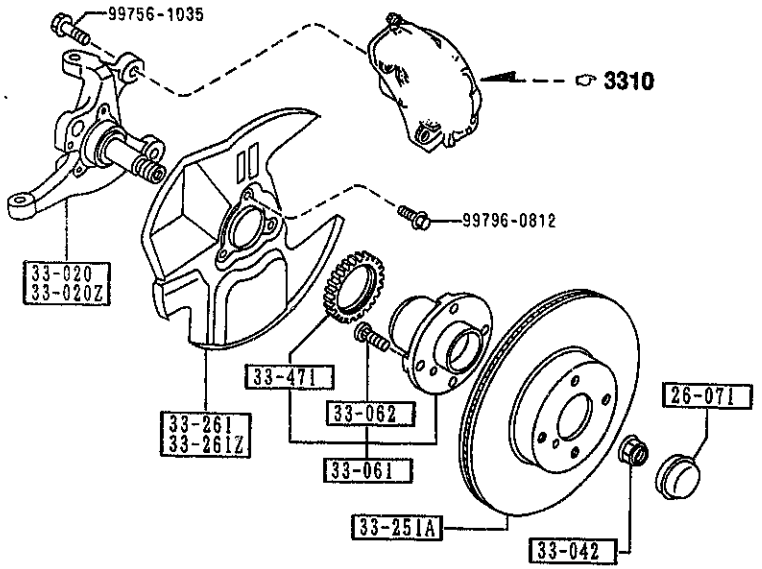

3300 A-1 * FRONT AXLE (W/ANTILOCK BRAKE)

PART NO.	QTY	MODEL/RESTRICTION	MODEL/RESTRICTION	MODEL/RESTRICTION	FROM-TO
26-071 B455-26-071	2	CAP,HUB			
33-020 NA23-33-021B	1	KNUCKLE(R),STEERING			
33-020Z NA23-33-031B	1	KNUCKLE(L),STEERING			
33-042 D06Y-33-042	2	NUT W/WASHER			
33-061 NA23-33-04XA	2	HUB,WHEEL			
33-062 B455-33-062	8	BOLT,HUB			
33-251A NA75-33-25X	2	PLATE,DISC			
33-261 NA75-33-261	1	COVER(R),DUST			
33-261Z NA75-33-271	1	COVER(L),DUST			
33-471 NA23-33-471B	2	ROTOR,SENSOR-FRT A.B.S.			

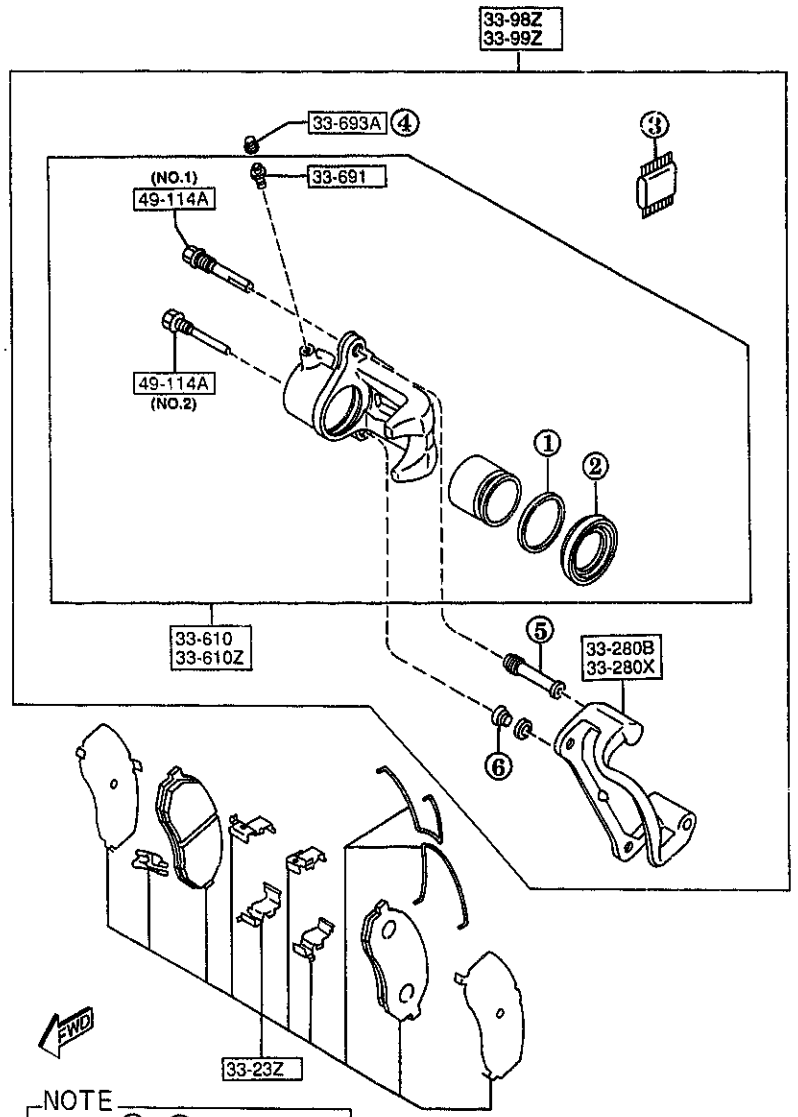

NOTE

①…⑥ ⇨ 33-26Z

THE D-CODE OF 33-26Z CONSISTS OF FIGURE NUMBERS ① THROUGH ⑥.

THOUGH ILLUSTRATIONS OF D-CODE 33-23Z AND 33-26Z ARE FOR LEFT SIDE ONLY, QUANTITIES OF THESE D-CODES IN THE TEXT ARE FOR ONE VEHICLE.

PART NO.	QTY	MODEL/RESTRICTION	MODEL/RESTRICTION	MODEL/RESTRICTION	FROM-TO
33-23Z		PAD SET,FRT CALIPER			
NAY5-33-23Z AN(NAY5-33-23ZA)	1				-5C01
*NAY5-33-23ZA	1				5C01-
33-26Z		SEAL & BOOT SET,CAL. -FRT			
NAY5-33-26Z	1				
33-280B		SUPPORT(R),MOUNTING			
NA75-33-281	1				
33-280X		SUPPORT(L),MOUNTING			
NA75-33-291	1				
33-610		BODY & PISTON(R),CALIPER			
NA75-33-61X	1				
33-610Z		BODY & PISTON(L),CALIPER			
NA75-33-71X	1				
33-691		SCREW,BLEEDER			
B001-33-691	2				
33-693A		CAP,BLEEDER SCREW			
0259-33-693	2				
33-98Z		CALIPER(R),PADLESS-FR			
*NAZ5-33-98Z	1				
33-99Z		CALIPER(L),PADLESS-FR			
*NAZ5-33-99Z	1				
49-114A		PIN,SLIDER			
8173-49-114	2	(ILLUST. NO.1)			
8239-49-114	2	(ILLUST. NO.2)			

5C01 NA3** -706448

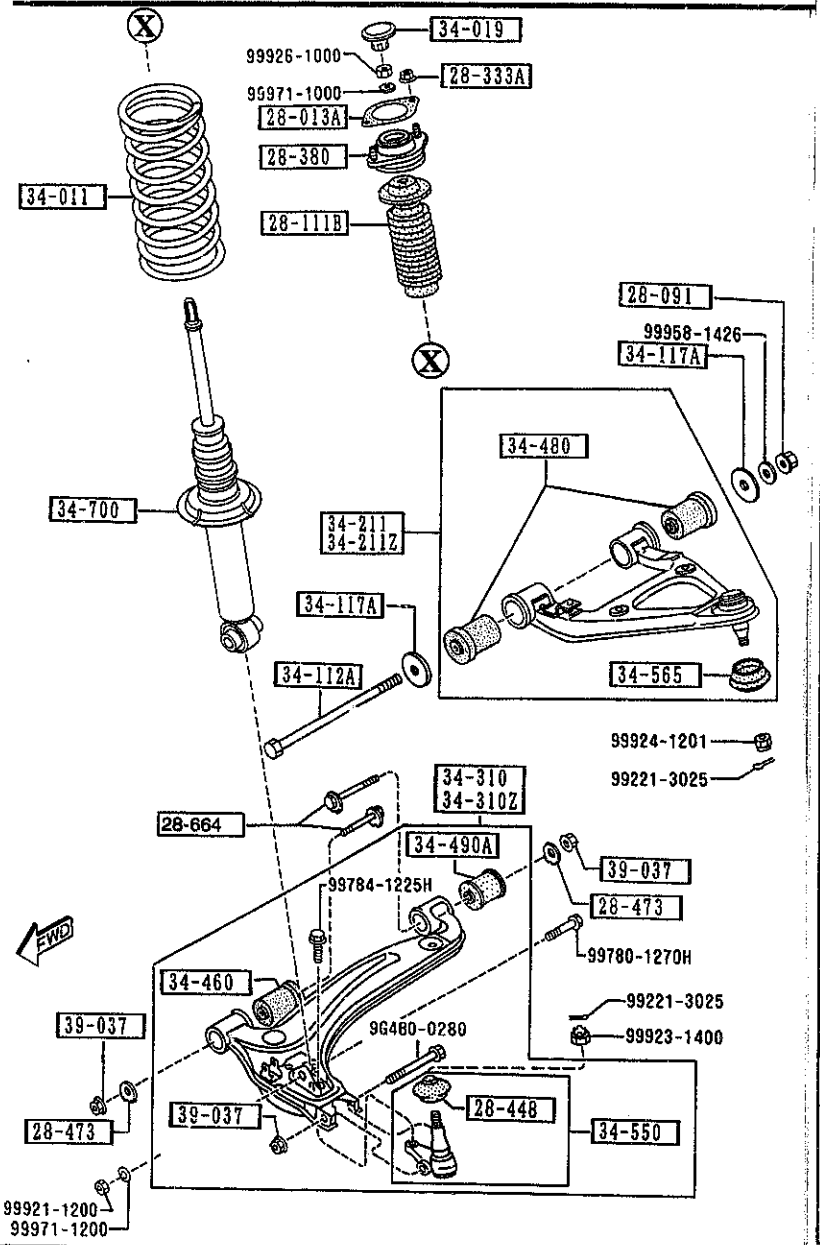

3400 -1 FRONT SUSPENSION MECHANISMS

PART NO.	QTY	MODEL/RESTRICTION	MODEL/RESTRICTION	MODEL/RESTRICTION	FROM-TO
28-013A		SHEET,RUBBER			
G030-28-013A	2				
28-091		NUT			
FB01-28-091A	2				
28-111B		STOPPER,BUMP			
N021-34-111	2				
28-333A		NUT,FLANGE			
H001-28-333	4				
28-380		RUBBER,MOUNTING			
NA01-28-380B	2				
28-448		SEAL,DUST-BALL JOINT			
H266-28-448	2				
28-473		PLATE,CAM-SUB FRAME			
NA75-34-473	4				-5B15
NA80-28-473	4				5B15-
28-664		BOLT,ADJUST			
NA75-34-4A0	4				-4B01
NA75-34-4A0A	4				4B01-5B15
*NA80-28-66Z A (NA80-28-66ZB)	4				5B15-6401
*NA80-28-66ZB	4				6401-
34-011		SPRING,COIL-FRONT			
NA03-34-011	2	(MT)			
NA81-34-011	2	(AT)			
34-019		CAP,DAMPER			
NA01-34-019	2				-4B01
34-112A		BOLT			
NA01-34-112	2				
34-117A		WASHER			

4B01 NA35* -606043
5B15 NA3** -705265
6401 NA3** -717787

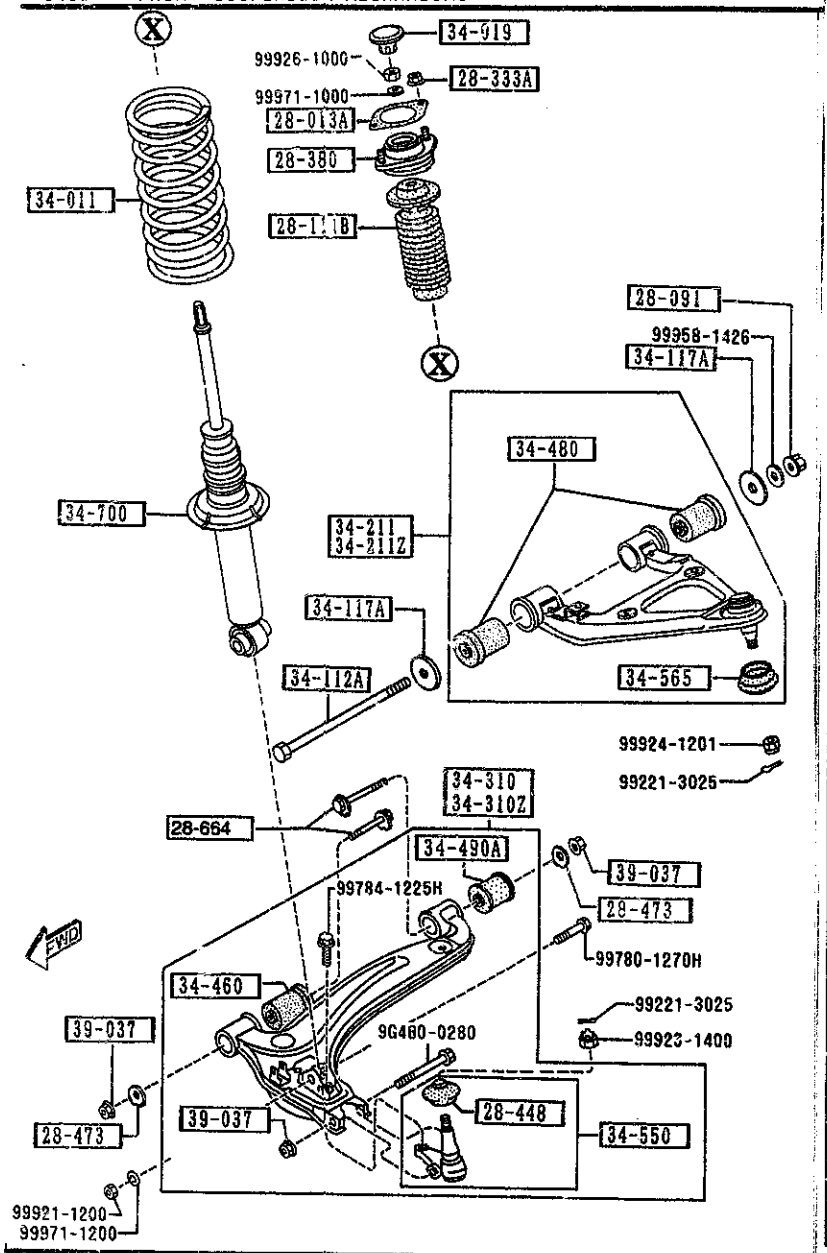

AUNA05

PART NO.	QTY	MODEL/RESTRICTION	MODEL/RESTRICTION	MODEL/RESTRICTION	FROM-TO
CONT'D					
NA01-34-117A	4				
34-211		ARM(R),UPPER			
NA01-34-200A	1	(W/O A. LOCK BRAKE)			
NA23-34-200	1	(W/A. LOCK BRAKE)			
34-211Z		ARM(L),UPPER			
NA01-34-200A	1	(W/O A. LOCK BRAKE)			
NA23-34-250	1	(W/A. LOCK BRAKE)			
34-310		ARM(R),LOWER			
NA75-34-300A	1	(W/O A. LOCK BRAKE)			
NA75-34-300A	1	(W/A. LOCK BRAKE)			-4A01
N040-34-300	1	(W/A. LOCK BRAKE)			4A01-
34-310Z		ARM(L),LOWER			
NA75-34-350A	1	(W/O A. LOCK BRAKE)			
NA75-34-350A	1	(W/A. LOCK BRAKE)			-4A01
N040-34-350	1	(W/A. LOCK BRAKE)			4A01-
34-460		BUSH,RUBBER-LWR ARM			
NA01-34-460A	2				
34-480		BUSHING,RUBBER-LOWER ARM			
NA01-34-480A	4				
34-490A		BUSHING,RUBBER			
NA01-34-490	2				
34-550		BALL JOINT,LOWER			
NA01-34-550	2				
34-565		SEAL,DUST			
NA01-34-548	2				
34-700		DAMPER,FRONT			
NA53-34-700B	2	((EXC.BILSTEIN DAMP.))>(W/A. LOCK BRAKE))			
N018-34-700B	2	((EXC.BILSTEIN DAMP.))>(W/O A. LOCK BRAKE			

4A01 NA35* -603621

CAT. AUNA05-04

1997-07

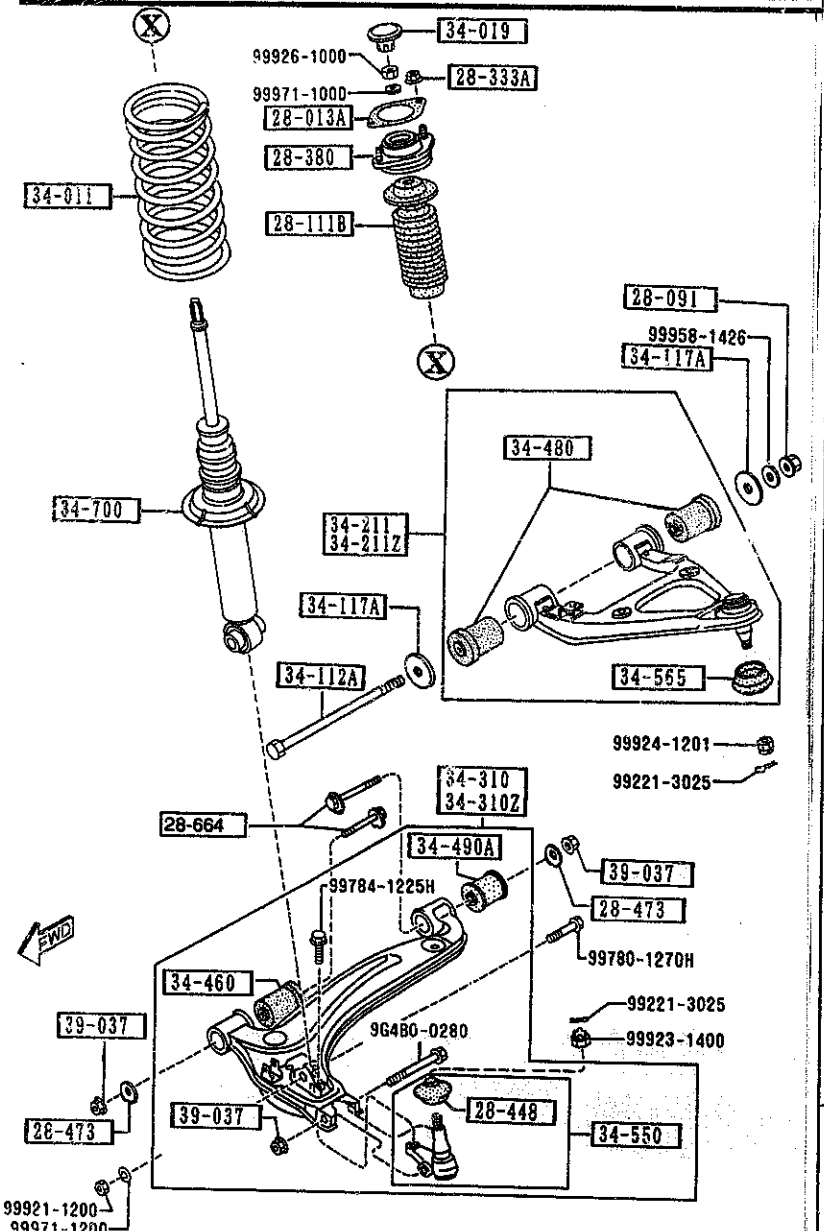

AUNA05

3400 -3 * FRONT SUSPENSION MECHANISMS

PART NO.	QTY	MODEL/RESTRICTION	MODEL/RESTRICTION	MODEL/RESTRICTION	FROM-TO
CONT'D		))			
N023-34-700C	2	((BILSTEIN DAMP.)>('95 MODEL))			
N023-34-700D	2	((BILSTEIN DAMP.)-('96 MODEL))			
+---------+					
| 39-037 |		NUT			
+---------+					
B037-28-091	6				-4B01
B001-39-037B	6				4B01-

4B01 NA35* -606043

CAT. AUNA05-04

1997-07

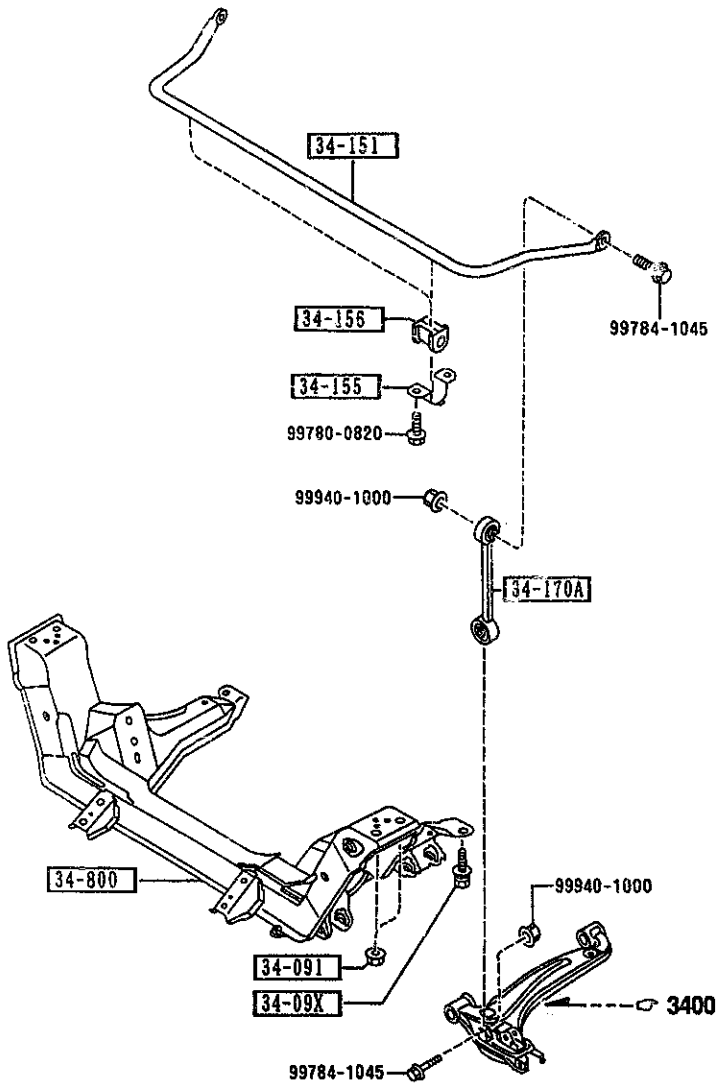

3410 -1 * CROSSMEMBER & STABILIZER

PART NO.	QTY	MODEL/RESTRICTION	MODEL/RESTRICTION	MODEL/RESTRICTION	FROM-TO
| 34-09X |		BOLT			
NA01-34-09XA	4				
| 34-091 |		NUT			
FB01-34-091	4				
| 34-151 |		STABILIZER,FRONT			
NA75-34-151	1	(BILSTEIN DAMP.)			
NA80-34-151	1	(EXC.BILSTEIN DAMP.)			
| 34-155 |		PLATE,STABILIZER			
FB01-34-155	2				
| 34-156 |		BUSH,STABILIZER-FRT			
NA01-34-156A	2	(EXC.BILSTEIN DAMP.)			
NA75-34-156	2	(BILSTEIN DAMP.)			
| 34-170A |		LINK,CONTROL-STAB			
NA01-34-170	2				
| 34-800 |		MEMBER,CROSS			
NA01-34-800C (NA01-34-800D)	1				-5B15
NA01-34-800D	1				5B15-

5B1 NA3** -705265

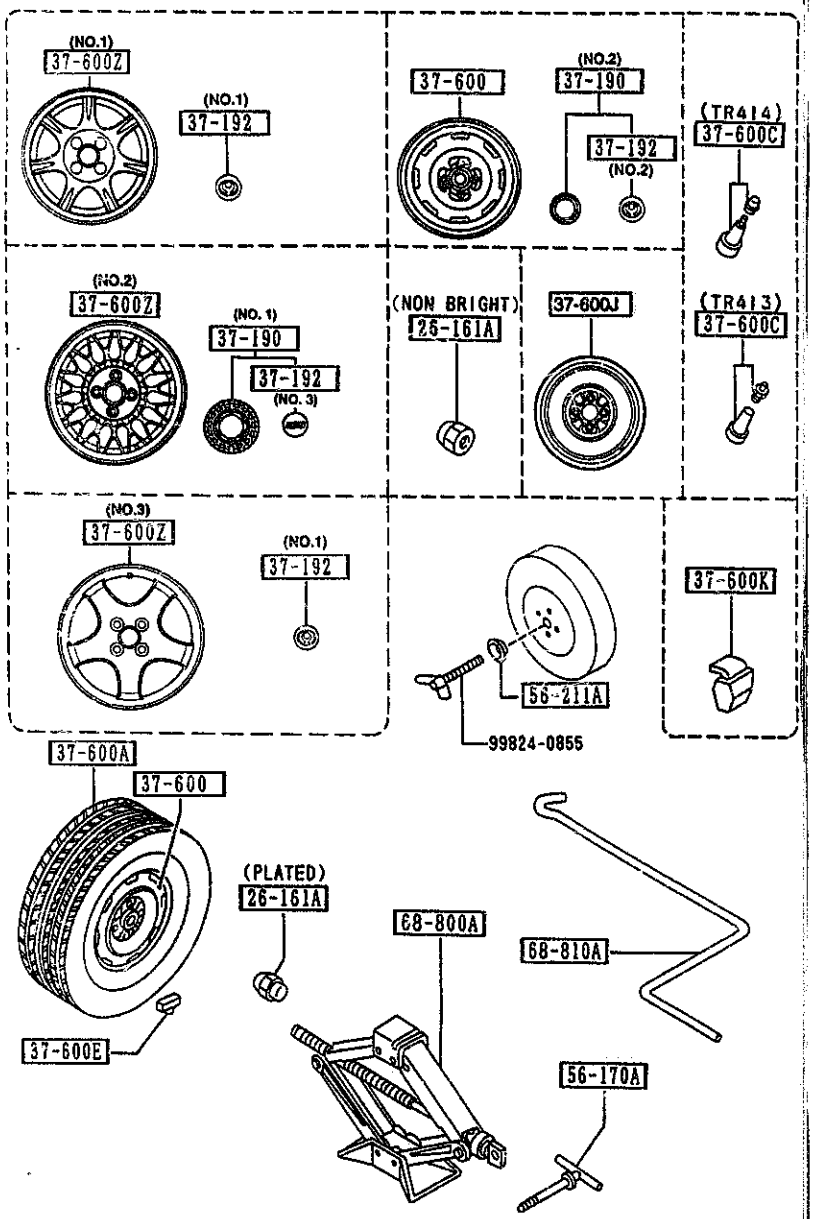

PART NO.	QTY	MODEL/RESTRICTION	MODEL/RESTRICTION	MODEL/RESTRICTION	FROM-TO
26-161A		NUT,HUB			
0603-26-161	16	NON BRIGHT			
B002-37-160	16	PLATED			
37-190		CAP,CENTER			
M011-37-190	4	(ILLUST. NO.1)			
NA53-37-190	4	(ILLUST. NO.2)			
37-192		EMBLEM,CAP-WHEEL			
EA02-37-192	4	(ILLUST. NO.1)			
GA7C-37-192	4	(ILLUST. NO.2)			
M011-37-192	4	(ILLUST. NO.3)			
37-600		WHEEL,DISC-STEEL			
9965B-95540	4	5.5JJX14 P=100/0=45			
37-600A		TIRE			
90620-47614	1	T115/70D14			
90623-06684	4	P185/60R14 DUNLOP			
90624-26684	4	P185/60R14 BS			
90625-56684	4	P185/60R14 YOKOHAMA			
37-600C		VALVE,AIR			
99636-04130	1	TR413			
99636-04140	4	TR414			
37-600E		WEIGHT,DISC WHEEL-STEEL			
99655-30005	4	5G			
99655-30010	4	10G			
99655-30015	4	15G			
99655-30020	4	20G			

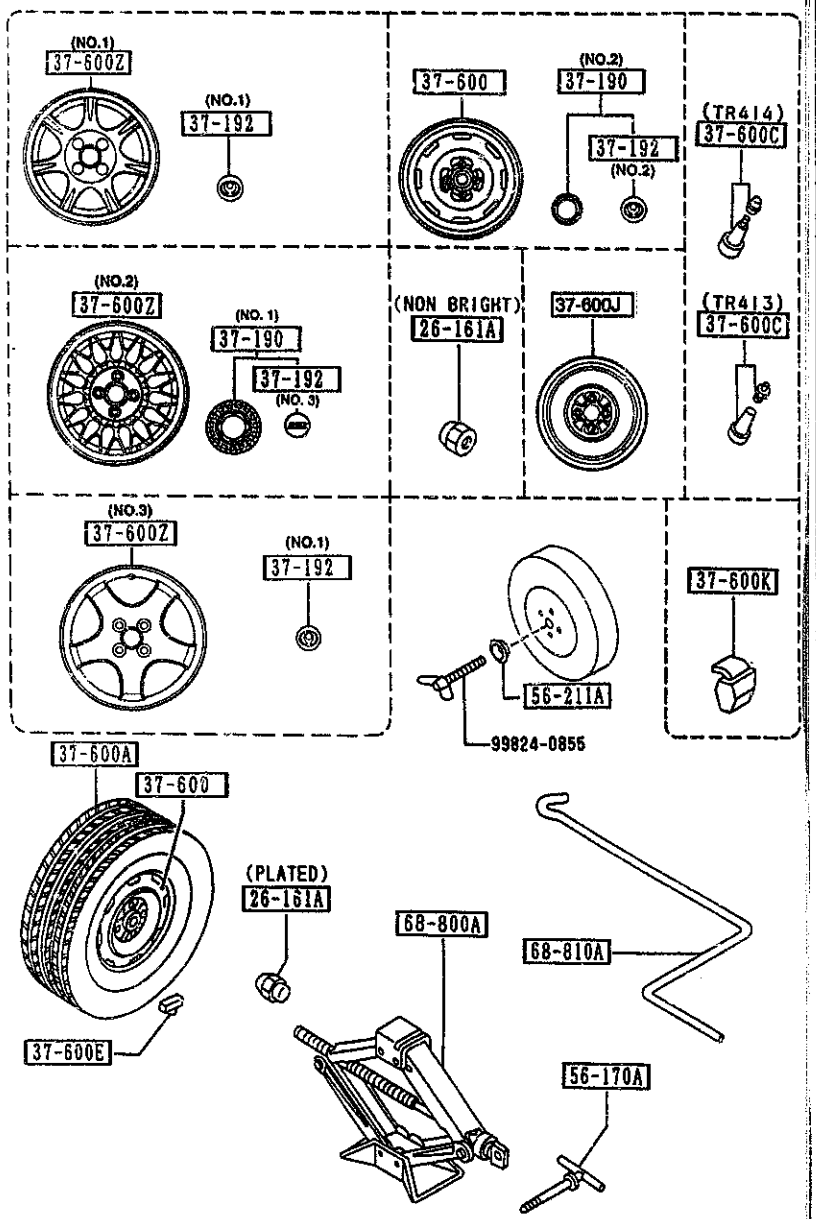

PART NO.	QTY	MODEL/RESTRICTION	MODEL/RESTRICTION	MODEL/RESTRICTION	FROM-TO
CONT'D					
99655-30025	4	25G			
99655-30030	4	30G			
99655-30035	4	35G			
99655-30040	4	40G			
99655-30045	4	45G			
99655-30050	4	50G			
99655-30055	4	55G			
99655-30060	4	60G			
+----------+					
| 37-600J |		WHEEL DISK-TEMPORARY			
+----------+					
99651-84040	1	4TX14 P=100/O=45			-5101
*99652-14040	1	4TX14 P=100/O=45			5101-
+----------+					
| 37-600K |		WEIGHT,DISC WHEEL-ALUMI			
+----------+					
99655-90005	4	5G FOR 1-PIECE WHL			
99655-90010	4	10G FOR 1-PIECE WHL			
99655-90015	4	15G FOR 1-PIECE WHL			
99655-90020	4	20G FOR 1-PIECE WHL			
99655-90025	4	25G FOR 1-PIECE WHL			
99655-90030	4	30G FOR 1-PIECE WHL			
99655-90035	4	35G FOR 1-PIECE WHL			
99655-90040	4	40G FOR 1-PIECE WHL			
99655-90045	4	45G FOR 1-PIECE WHL			
99655-90050	4	50G FOR 1-PIECE WHL			
99655-90055	4	55G FOR 1-PIECE WHL			

5101 NA35* -612163

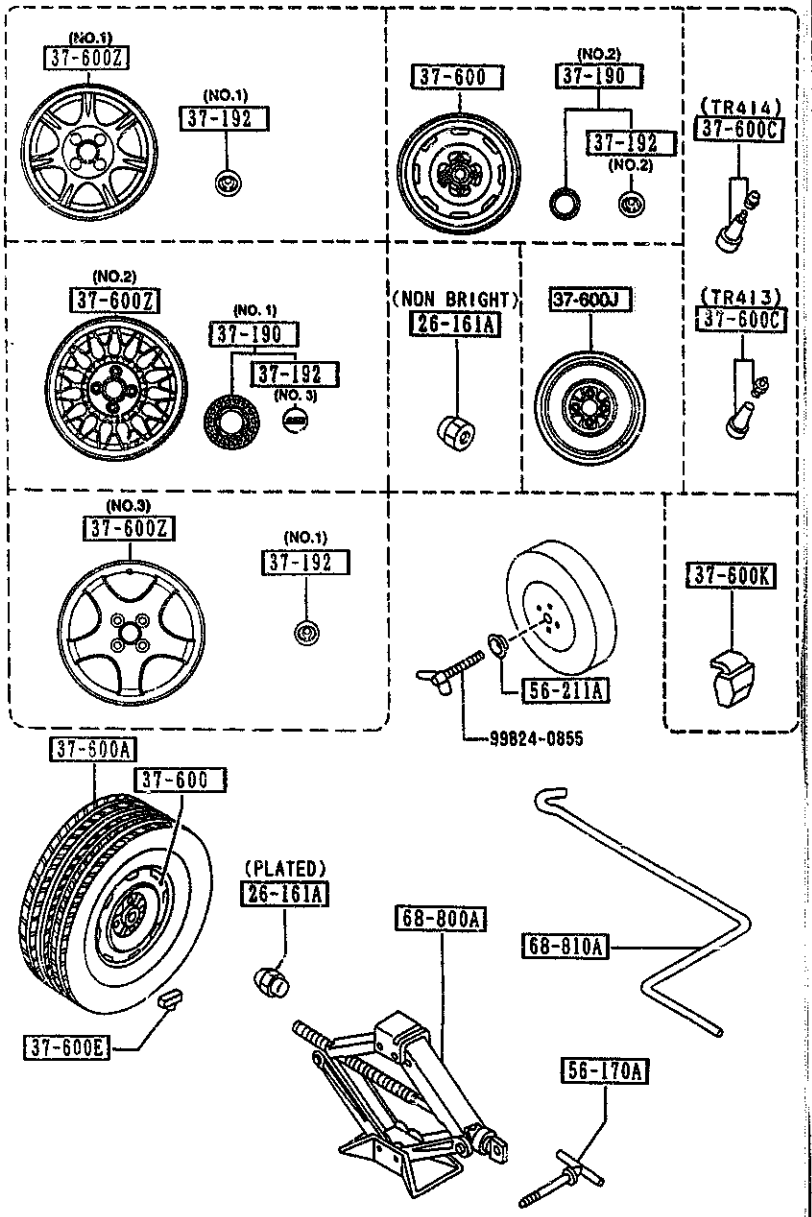

PART NO.	QTY	MODEL/RESTRICTION	MODEL/RESTRICTION	MODEL/RESTRICTION	FROM-TO
CONT'D					
99655-90060	4	60G FOR 1-PIECE WHL			
+----------+					
| 37-600Z |		WHEEL,DISC-ALUMI.			
+----------+					
99651-36040	4	6JJX14 SILVER (ILLUST. NO.1)			
99651-96040	4	6JJX14 BRIGHT (ILLUST. NO.1)			
9965C-36050	4	6JJX15 BBS (ILLUST. NO.2)			4A01-
9965E-86050	4	6JJX15 (ILLUST. NO.3)			5B15-
+----------+					
| 56-170A |		BOLT,JACK SET			
+----------+					
B001-56-170C	1				
+----------+					
| 56-211A |		PLATE,CLAMP-JACK			
+----------+					
1219-56-211	1				
+----------+					
| 68-800A |		JACK			
+----------+					
B455-37-790A	1				
+----------+					
| 68-810A |		HANDLE,JACK			
+----------+					
GJ21-37-810	1				

4A01 NA35* -603621
5B15 NA3** -705265

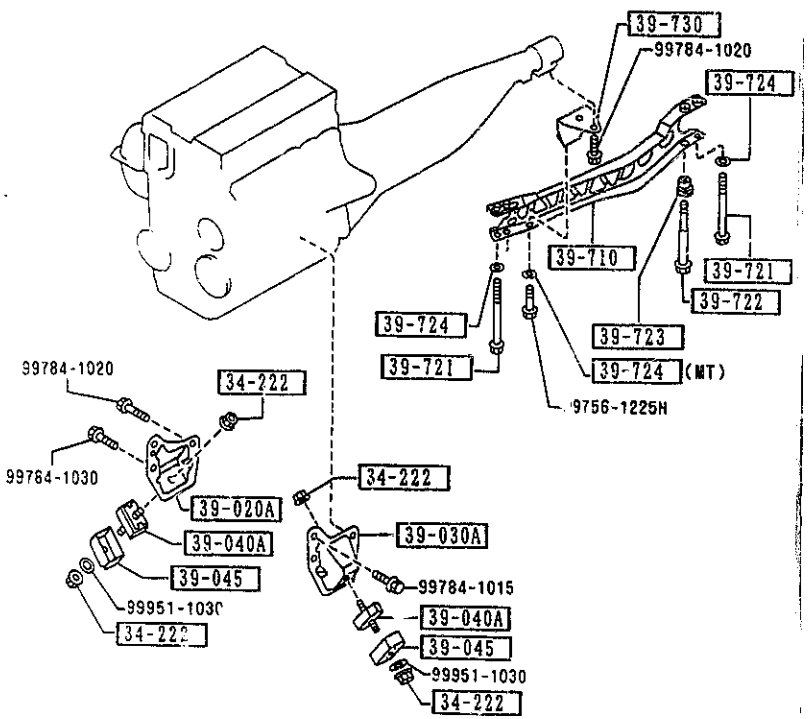

3900 -1 * ENGINE & T/MISSION MOUNTINGS

PART NO.	QTY	MODEL/RESTRICTION	MODEL/RESTRICTION	MODEL/RESTRICTION	FROM-TO
34-222		NUT			
8871-34-222	4				
39-020A		BRACKET(R),ENGINE			
NA75-39-021	1				
39-030A		BRACKET(L),ENGINE			
NA75-39-030	1				
39-040A		RUBBER,ENGINE MT.			
NA01-39-040A	2				
39-045		CASING,STOPPER			
NA01-39-041A	2	(MT)			
S231-39-041A	2	(AT)			-5703
NA01-39-041A	2	(AT)			5703-
39-710		FRAME,POWER PLANT			
NA75-39-710A A (NA01-39-710A)	1	(MT)			-4A17
NA81-39-710A	1	(AT)			-4A21
NA01-39-710A	1	(MT)			4A17-
NA03-39-710A	1	(AT)			4A21-
39-721		BOLT,PLANT FRAME			
NA01-39-721	3				
39-722		BOLT,PLANT FRAME			
NA01-39-722	1				
39-723		SPACER,PLANT FRAME			
NA01-39-723	1				
39-724		WASHER,PLAIN-FRAME			
NA01-39-724	3	(AT)			
NA01-39-724	4	(MT)			
39-730		BRACKET,PLANT FRAME			
NA01-39-730A	1	(MT)			

4A17 NA35* -604764
4A21 NA35* -605228
5703 NA3** -700001

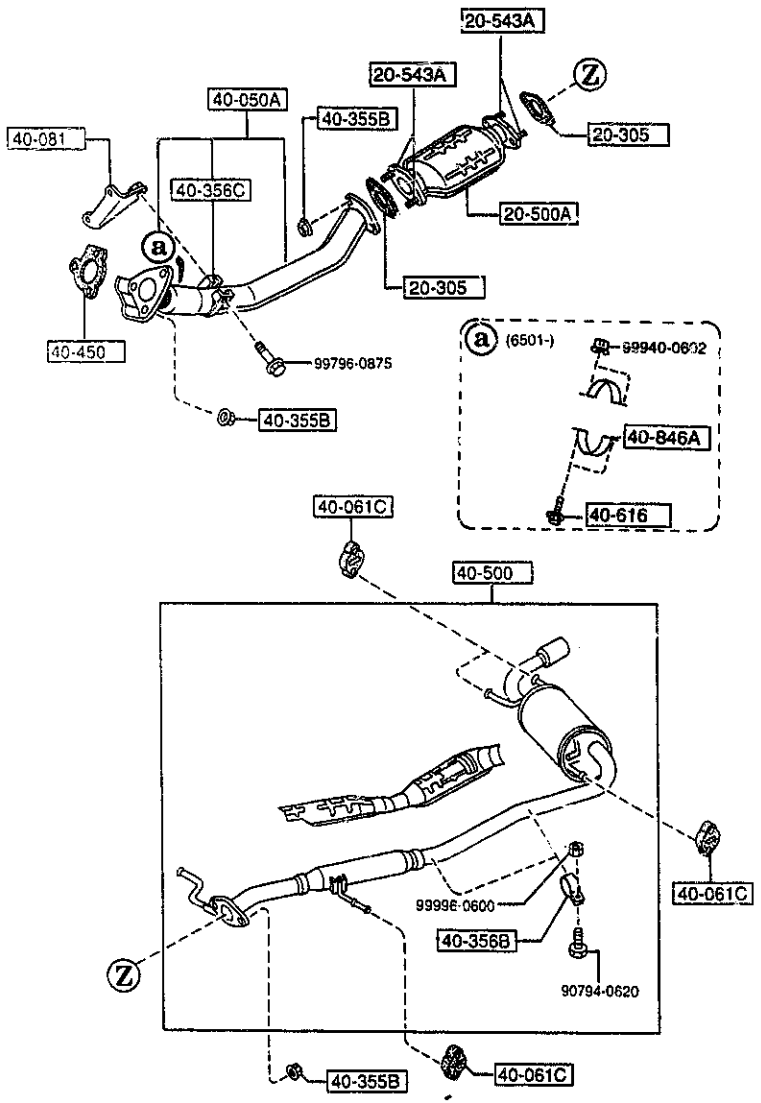

AUNA05

4000 -1 EXHAUST SYSTEM

PART NO.	QTY	MODEL/RESTRICTION	MODEL/RESTRICTION	MODEL/RESTRICTION	FROM-TO
20-305		GASKET,EXH.PIPE-CONVERTER			
B690-40-305	2	NON ASBESTOS			
20-500A		CATALYST,THREE WAY			
BPE8-20-600	1	('95 MODEL)			
BPS1-20-600	1	('96 MODEL)			
20-543A		STUD			
*Z502-20-WA4	4				
40-050A		PIPE,EXHAUST-FRONT			
BP56-40-500A (BP56-40-500A)	1				-6501
*BP56-40-500A AN(BP56-40-500B)	1				6501-6601
*BP56-40-500B	1				6601-
40-061C		HANGER,SILENCER			
RF03-40-061	4				
40-081		BRACKET,HANGER			
B690-40-080A	1				
40-355B		NUT			
JE10-40-355	7				
40-356B		BAND			
B6A5-40-356	2				
40-356C		BAND			
B690-40-356	1				
40-450		GASKET,CONVERTER			
B690-40-450	1	NON ASBESTOS			
40-500		SILENCER,MAIN			
BPA5-40-100	1	(('96 MODEL)>(MT))			
BPA6-40-100	1	(('96 MODEL)>(AT))			
BP55-40-100C AN(BP55-40-100D)	1	(('95 MODEL)>(MT))			-4901

4901 NA35* -602618
6501 NA3** -718684
6601 NA3** -719621

CAT. AUNA05-04 1997-07

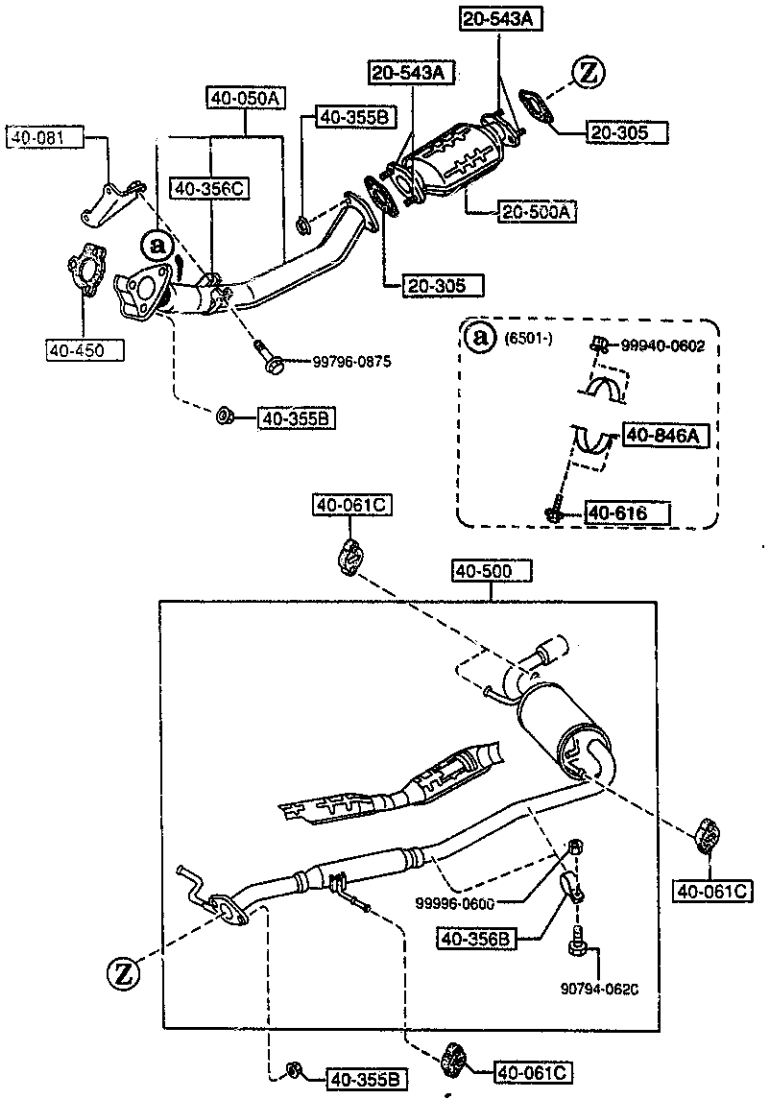

PART NO.	QTY	MODEL/RESTRICTION	MODEL/RESTRICTION	MODEL/RESTRICTION	FROM-TO
CONT'D					
BP56-40-100C AN(BP56-40-100D)	1	(('95 MODEL)>(AT))			-4901
BP55-40-100D	1	(('95 MODEL)>(MT))			4901-
BP56-40-100D	1	(('95 MODEL)>(AT))			4901-
40-616		BOLT			
*E521-40-616	2				6501-
40-846A		BRACKET,PROTECTOR			
*F203-40-802	1				6501-

4901 NA35* -602618
6501 NA3** -718684

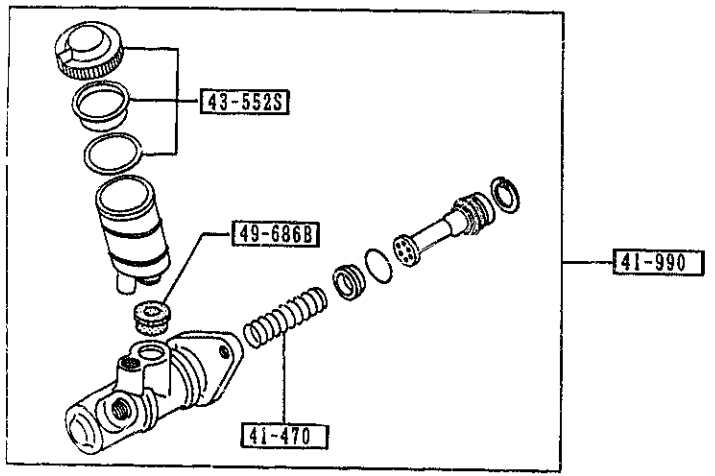

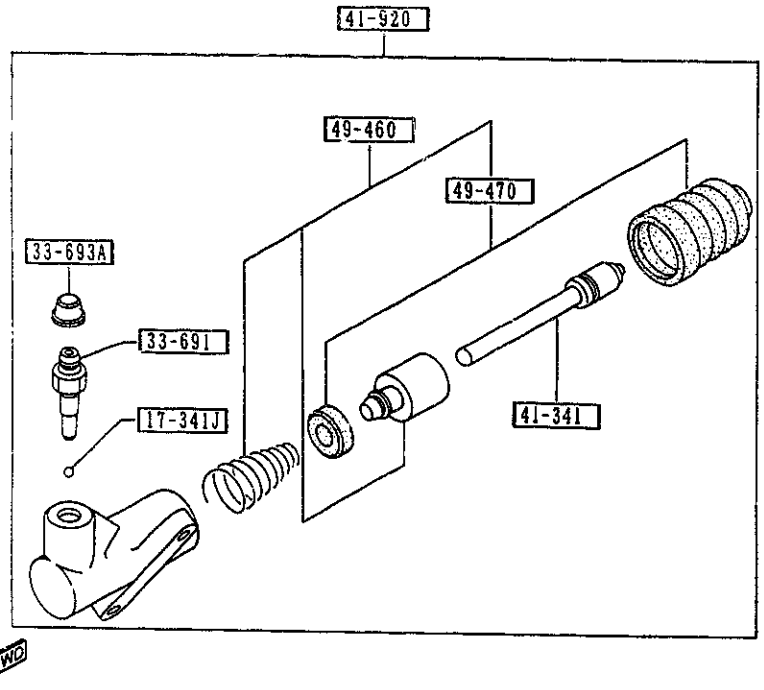

AUNA05

4140 -1 * MANUAL TRANSMISSION CLUTCH RELEASE & MASTER CYLINDERS

PART NO.	QTY	MODEL/RESTRICTION	MODEL/RESTRICTION	MODEL/RESTRICTION	FROM-TO
17-341J 99611-1500	1	BALL,STEEL			
33-691 0259-33-691	1	SCREW,BLEEDER			
33-693A 0259-33-693	1	CAP,BLEEDER SCREW			
41-341 H266-41-341	1	ROD,PUSH			
41-470 3312-41-470	1	SPRING			
41-920 NA01-41-920	1	CYL.,CLUTCH RELEASE			
41-990 NA01-41-400A	1	CYL.,CLUTCH MASTER			
43-552S B093-49-580	1	CAP SET,RESERVE TANK			
49-460 HD05-49-460	1	PARTS KIT,INNER			
49-470 HD05-49-470	1	SEAL KIT			
49-686B 0305-49-686B	1	BUSH,ELBOW JOINT			

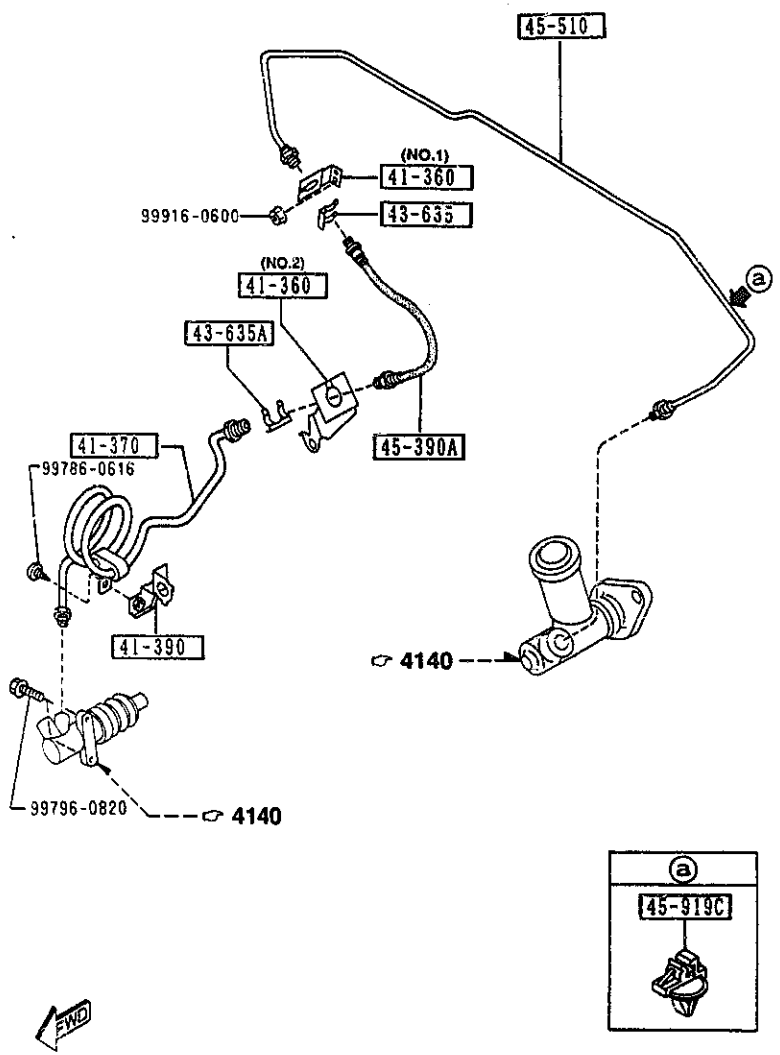

4145 -1 * MANUAL TRANSMISSION CLUTCH PIPINGS

PART NO.	QTY	MODEL/RESTRICTION	MODEL/RESTRICTION	MODEL/RESTRICTION	FROM-TO
41-360		HOLDER,CLUTCH			
NA02-41-370	1	MIDORI (ILLUST. NO.1)			
NA75-41-370	1	(ILLUST. NO.2)			
41-370		PIPE,CLUTCH			
NA75-41-360	1				
41-390		HOLDER,PIPE			
NA01-41-390	1				
43-635		CLIP,FLEXIBLE HOSE			
W023-43-635 A (W023-43-635A)	1				-4927
W023-43-635A	1				4927-
43-635A		CLIP,FLEXIBLE HOSE			
0136-43-635	1				
45-390A		HOSE,CLUTCH FLEXIBLE			
HE01-45-540	1				
45-510		PIPE,CLUTCH			
NA01-45-510C	1	(W/O A. LOCK BRAKE)			
NA20-45-510D	1	(W/A. LOCK BRAKE)			
45-919C		CLIP,PIPE			
G030-45-919A	1				

4927 NA35* -603489

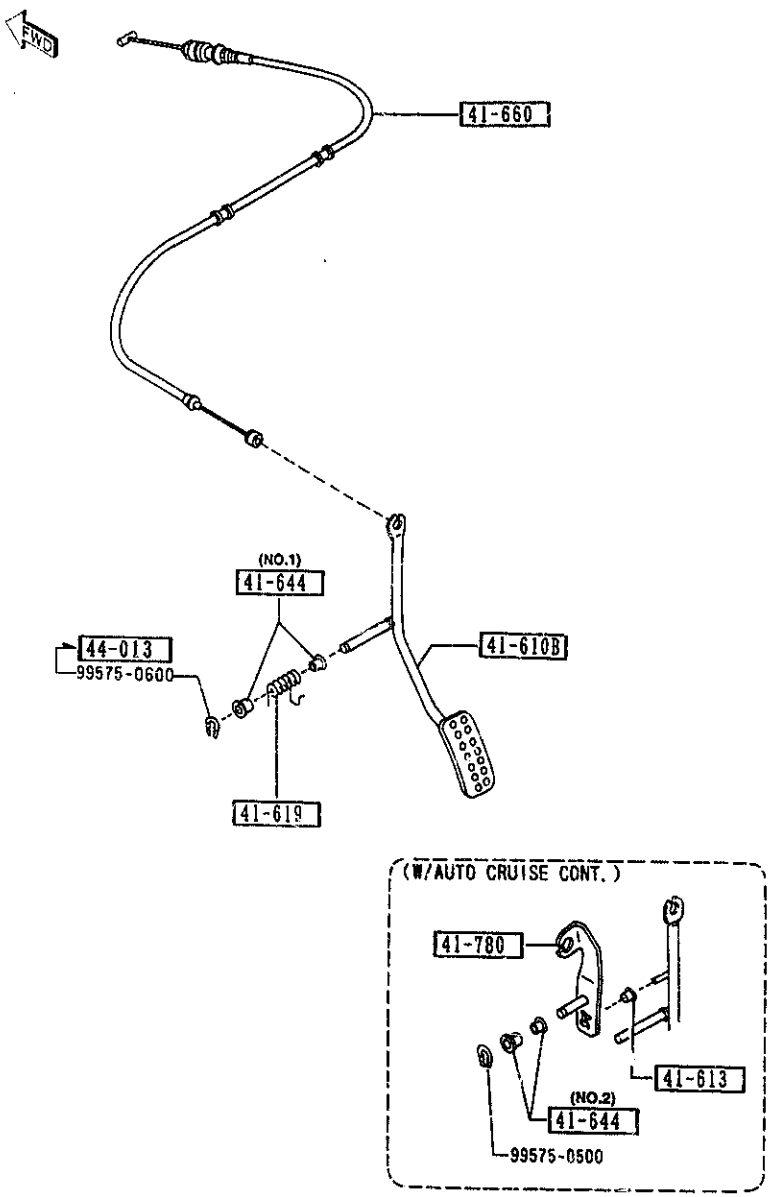

4160 -1 * ACCELERATOR CONTROL SYSTEM

PART NO.	QTY	MODEL/RESTRICTION	MODEL/RESTRICTION	MODEL/RESTRICTION	FROM-TO
| 41-610B |		PEDAL & ARM			
NA01-41-610A	1	BASE, R-PKG, PKG-A, (W/O AUTO CRUISE.CONT.)			-5401
NA02-41-610A	1	M-25-ED, P.E.GR, L-PKG, PKG-B, PKG-C, (W/AUTO CRUISE.CONT.)			-5401
NA01-41-610B	1	BASE, R-PKG, PKG-A, (W/O AUTO CRUISE.CONT.)			5401-
NA02-41-610B	1	M-25-ED, P.E.GR, L-PKG, PKG-B, PKG-C, (W/AUTO CRUISE.CONT.)			5401-
| 41-613 |		ROLLER			
B104-41-114	1	M-25-ED, P.E.GR, L-PKG, PKG-B, PKG-C, (W/AUTO CRUISE.CONT.)			
| 41-619 |		SPRING,RETURN			
NA01-41-619	1				
| 41-644 |		BUSH			
0259-41-644	2	ONDO KOSAKUSHO M-25-ED, P.E.GR, L-PKG, PKG-B, PKG-C, (ILLUST. NO.2) (W/AUTO CRUISE.CONT.)			
B092-41-644	2	OIRES KOGYO (ILLUST. NO.1)			-5401
| 41-660 |		CABLE,ACCEL.			
NB15-41-660	1				
| 41-780 |		LEVER,ACCELERATOR			
NA01-41-130A	1	M-25-ED, P.E.GR, L-PKG, PKG-B, PKG-C, (W/AUTO CRUISE.CONT.)			
| 44-013 |		WASHER,PARKING LEVER			
9380-.4-013	1				5401-

5401 NA35* -619598

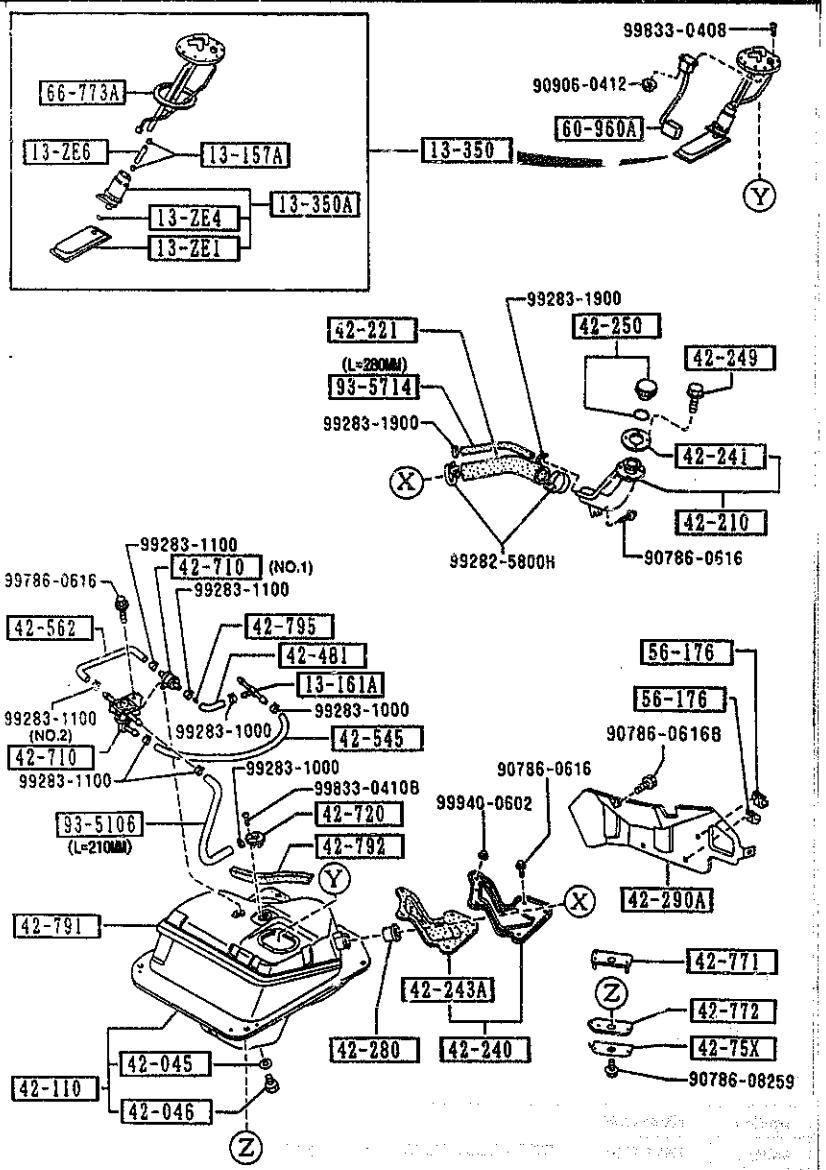

PART NO.	QTY	MODEL/RESTRICTION	MODEL/RESTRICTION	MODEL/RESTRICTION	FROM-TO
13-ZE1		FILTER,FUEL PUMP			
B61P-13-ZE1	1				
13-ZE4		WASHER,LOCK-PUMP FILTER			
FEH2-13-ZE4	1	NIPPONDENSO (JAPAN)			
13-ZE6		HOSE,FUEL PUMP-IN TANK			
KL19-13-ZE6	1				
13-157A		CLIP			
AZ28-13-157	2				
13-161A		JOINT'T'			
E580-13-161	1				
13-350		PUMP,FUEL			
BPE8-13-35Z	1				
13-350A		PUMP,FUEL-SUB			
BPE8-13-350	1				
42-045		GASKET,DRAIN PLUG			
0866-42-046	1				
42-046		PLUG,DRAIN			
B596-42-045	1				
42-110		TANK,FUEL			
NA75-42-110	1				
42-210		PIPE,FILLER			
NA01-42-210A	1				
42-221		HOSE,FILLER			
NA01-42-241C	1				
42-240		COVER,DUST			
NA75-42-240	1				
42-241		GASKET,FILLER PIPE			

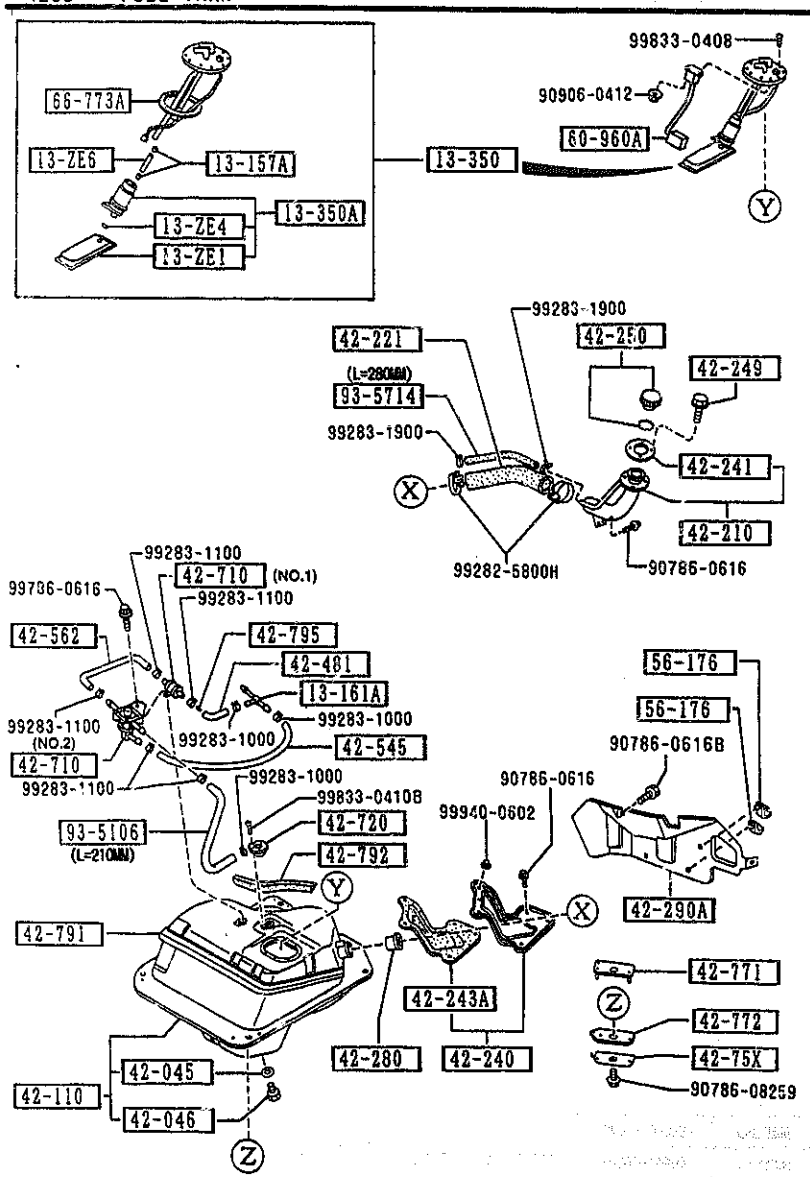

PART NO.	QTY	MODEL/RESTRICTION	MODEL/RESTRICTION	MODEL/RESTRICTION	FROM-TO
CONT'D					
8866-42-366B	1				
42-243A		GASKET'A',DUST COVER			
NA01-42-233	1				
42-249		BOLT,FILLER PIPE			
NA01-42-249B	4				
42-250		CAP,FILLER			
NA02-42-250	1	('95 MODEL)			
NB38-42-250	1	('96 MODEL)			
42-280		VALVE,NON RETURN			
H260-42-270	1				
42-290A		PROTECTOR'A',FILLER PIPE			
NA01-42-291B	1				-5106
NA01-42-291C	1				5106-
42-481		HOSE,FUEL			
NA75-42-561	1				
42-545		HOSE,FUEL			
NA75-42-564	1				
42-562		HOSE NO.2,BREATHER			
NA03-42-562	1				
42-710		VALVE,CHECK			
GA5R-42-910	1	(ILLUST. NO.1)			
NA75-42-910	1	(ILLUST. NO.2)			
42-720		VALVE,FUEL VAPOR.			
BC1M-42-980 A (BC1M-42-980A)	1				-5501
BC1M-42-980A	1				5501-
42-75X		REINF.,FUEL TANK			
NA01-42-77X	4				

5106 NA35* -612163
5501 NA35* -620210

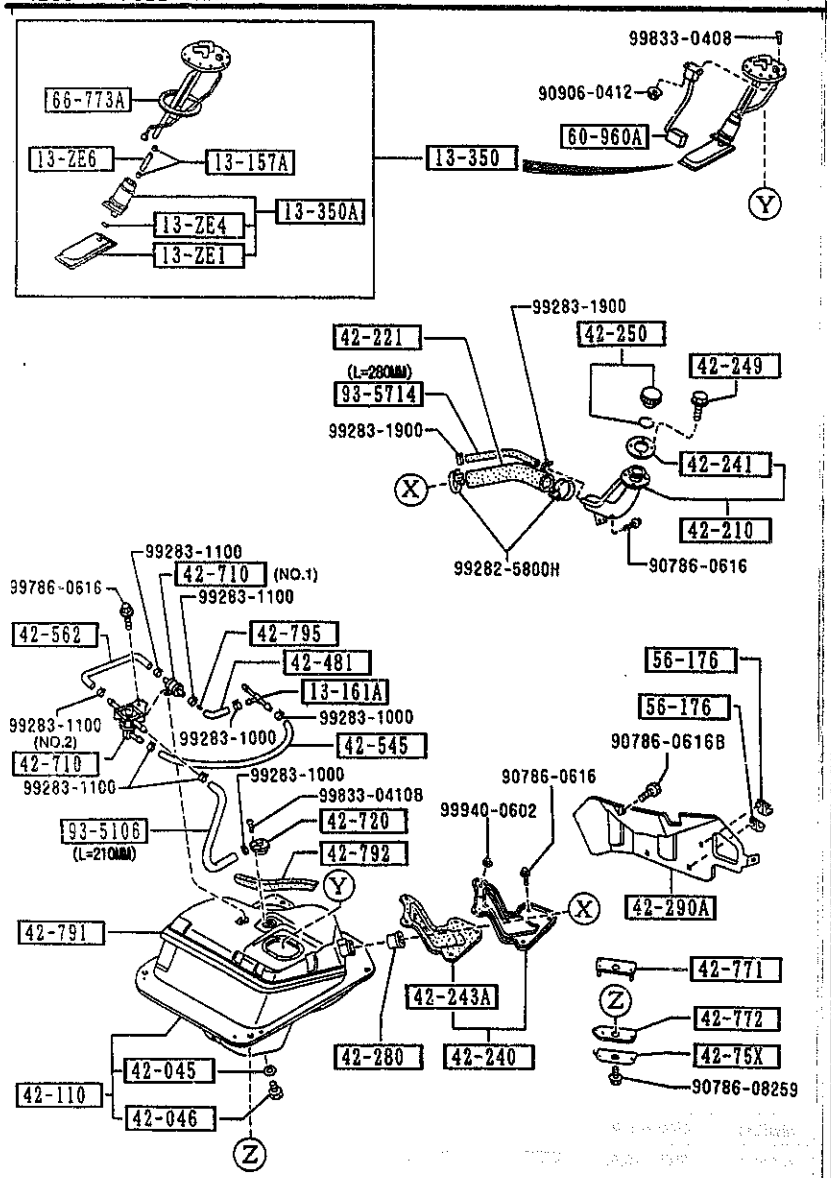

AUNA05

4200 -3 * FUEL TANK

PART NO.	QTY	MODEL/RESTRICTION	MODEL/RESTRICTION	MODEL/RESTRICTION	FROM-TO
42-771		RUBBER(UP),MOUNT-TANK			
NA01-42-771	4				
42-772		RUBBER(LWR),MOUNT-TANK			
NA01-42-772	4				
42-791		PAD,FUEL TANK			
NA01-42-761	1				
42-792		PAD,FUEL TANK			
NA01-42-762	1				
42-795		INSERT			
GN51-42-795	1				
56-176		HOLDER,JACK HANDLE			
G030-56-176	3				
60-960A		GAUGE,FUEL TANK			
NA75-60-960A	1				
66-773A		GASKET			
J004-60-962	1				
93-5106		HOSE			
99351-06999	1	L=1M CUT IT TO USE			
93-5714		HOSE			
99357-14999	1	L=1M CUT IT TO USE			

CAT. AUNA05-04

1997-07

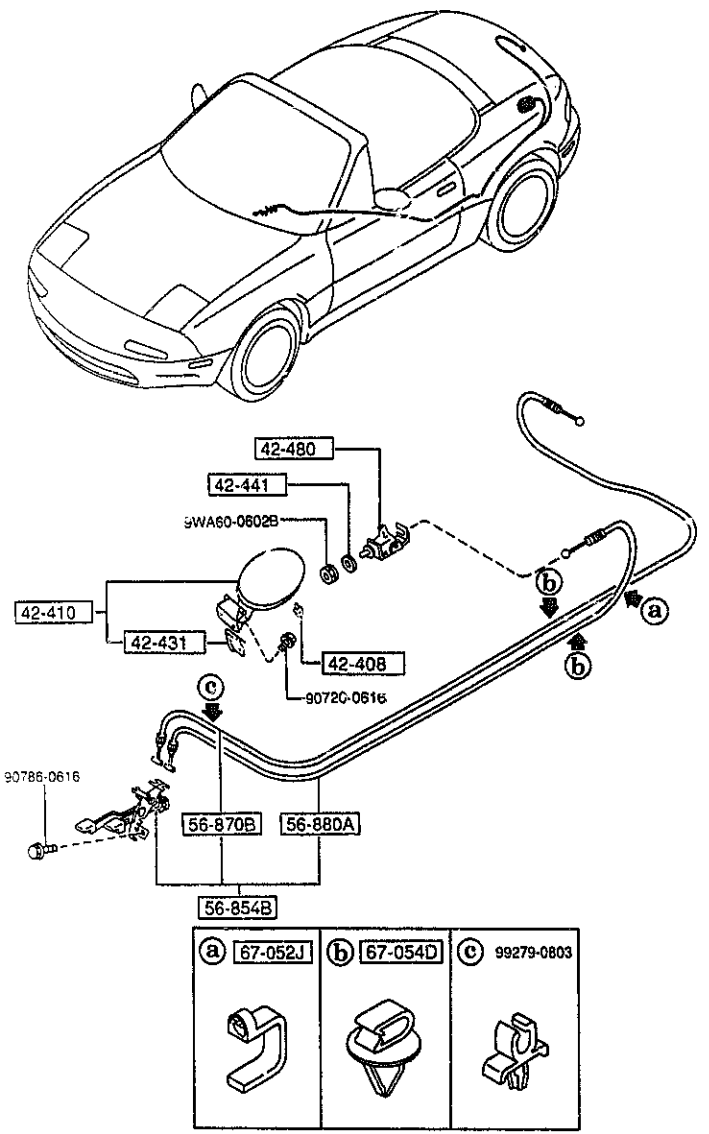

4210 -1 * FUEL LID OPENER

PART NO.	QTY	MODEL/RESTRICTION	MODEL/RESTRICTION	MODEL/RESTRICTION	FROM-TO
42-408		STOPPER,FILLER LID			
0187-70-491	2				
42-410		LID,FUEL FILLER			
NA01-42-410B	1				
42-431		SPRING LIFT,LID			
H043-42-431D	1				
42-441		WASHER,LID OPENER			
NA01-56-896	1				
42-480		OPENER,FILLER LID			
B095-56-890A	1				
56-854B		OPENER,T/LID & F/LID			
N007-56-850A	1				
56-870B		CABLE,T/LID OPENER			
N007-56-880A	1				
56-880A		CABLE,F/LID OPENER			
NA01-56-890A	1				
67-052J		CLIP			
B001-67-051	1				
67-054D		CLIP			
H260-67-054	2				

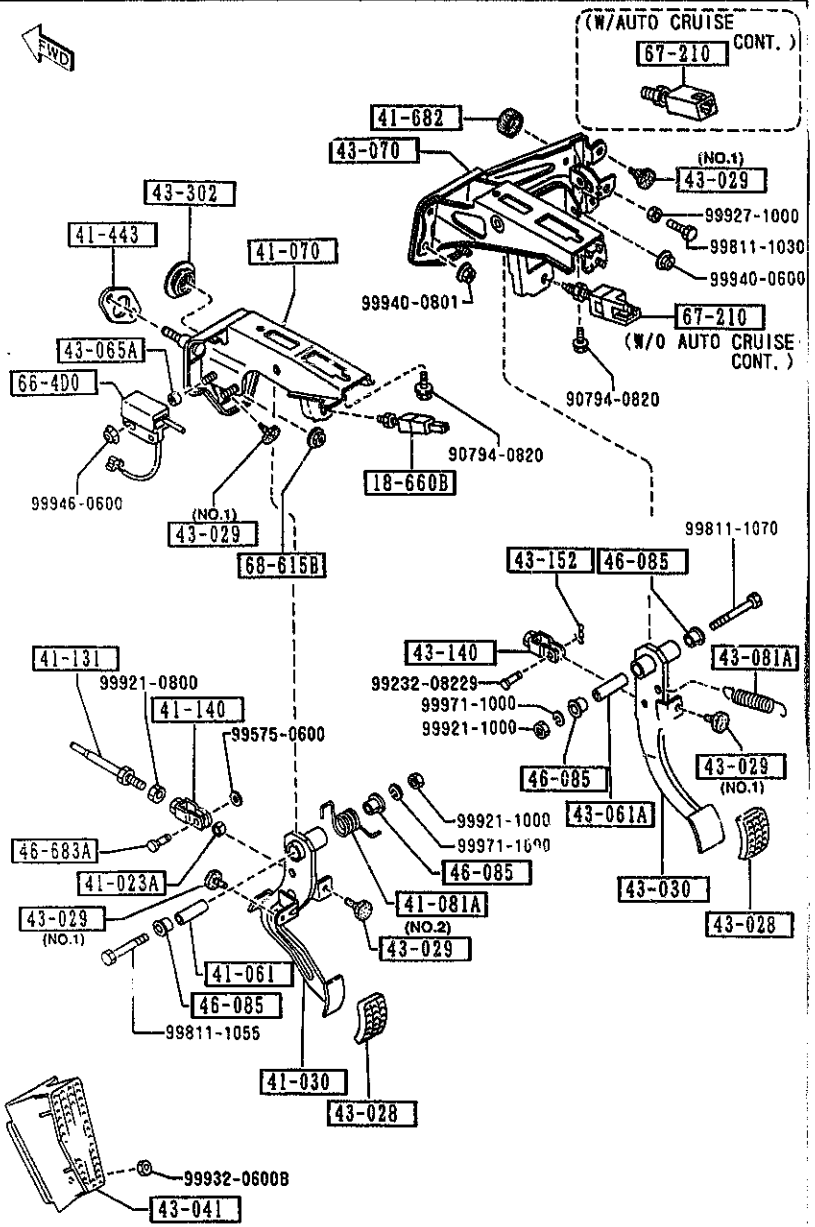

PART NO.	QTY	MODEL/RESTRICTION	MODEL/RESTRICTION	MODEL/RESTRICTION	FROM-TO
18-660B		SWITCH,CLUTCH			
LA01-66-490A	1				
41-023A		BUSH			
0727-41-023	1				
41-030		PEDAL,CLUTCH			
NA01-41-030C A (NA01-41-030D)	1				-5201
NA01-41-030D	1				5201-
41-061		SPACER			
0727-41-061	1				
41-070		BRACKET,MASTER CYL.			
NA01-41-070B	1				
41-081A		SPRING,RETURN			
BR70-41-081	1				
41-131		ROD,PUSH			
0824-41-131	1				
41-140		FORK,CLUTCH			
NA01-41-140B	1				
41-443		GASKET			
NA01-41-443	1				
41-682		RUBBER,STOP			
1456-41-682	1	M-25-ED, P.E.GR, L-P KG, PKG-B, PKG-C, (W/AUTO CRUISE.CONT.)			
43-028		PAD,PEDAL			
B092-43-028	2				
43-029		RUBBER,STOPPER			
B001-43-029	4	KUROISHI TEKKO (ILLUST. NO.1)			
G030-43-029	1	OIRES KOGYO (ILLUST. NO.2)			

5201 NA35* -614193

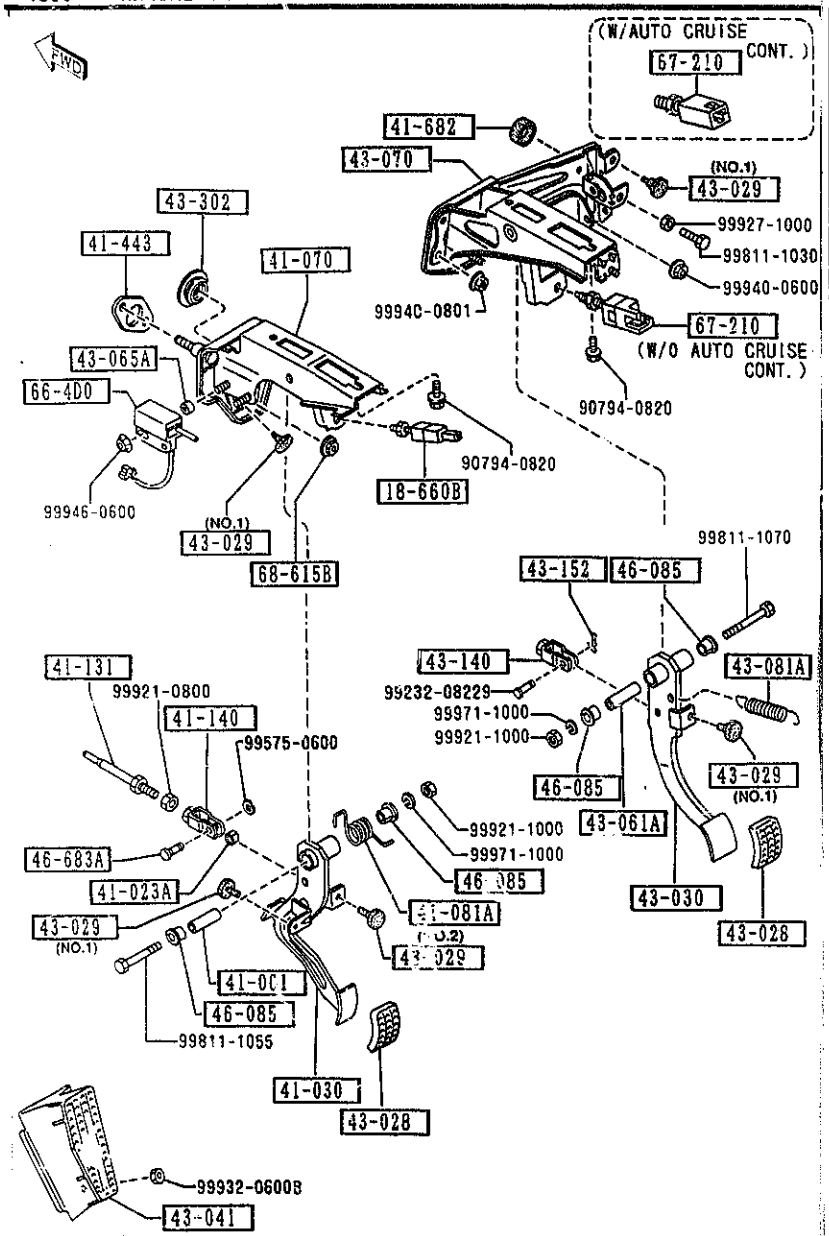

AUNA05

PART NO.	QTY	MODEL/RESTRICTION	MODEL/RESTRICTION	MODEL/RESTRICTION	FROM-TO
43-030		PEDAL,BRAKE			
NA01-43-030 AN(NA01-43-030A)	1				-5401
NA01-43-030A A (NA01-43-030B)	1				5401-5508
NA01-43-030B	1				5508-
43-041		REST,FOOT			
NA01-43-041	1				
43-061A		PIPE,PEDAL			
0866-43-062	1				
43-065A		SPACER			
BR70-43-065	1				
43-070		BRACKET,MASTER CYL.			
NA01-43-070A	1	BASE, R-PKG, PKG-A, (W/O AUTO CRUISE.CONT.)			-5401
NA02-43-070A	1	M-25-ED, P.E.GR, L-PKG, PKG-B, PKG-C, (W/AUTO CRUISE.CONT.)			-5401
NA01-43-070B	1	BASE, R-PKG, PKG-A, (W/O AUTO CRUISE.CONT.)			5401-
NA02-43-070B	1	M-25-ED, P.E.GR, L-PKG, PKG-B, PKG-C, (W/AUTO CRUISE.CONT.)			5401-
43-081A		SPRING,RETURN-BRAKE			
B092-41-081	1				
43-140		FORK,BRAKE			
1524-43-141	1				
43-152		PIN,SNAP			
D001-43-152	1				
43-302		GROMMET,BRAKE PEDAL			
B180-43-302	1				

5401 NA35* -619598
5508 NA35* -620210

CAT. AUNA05-04

1997-07

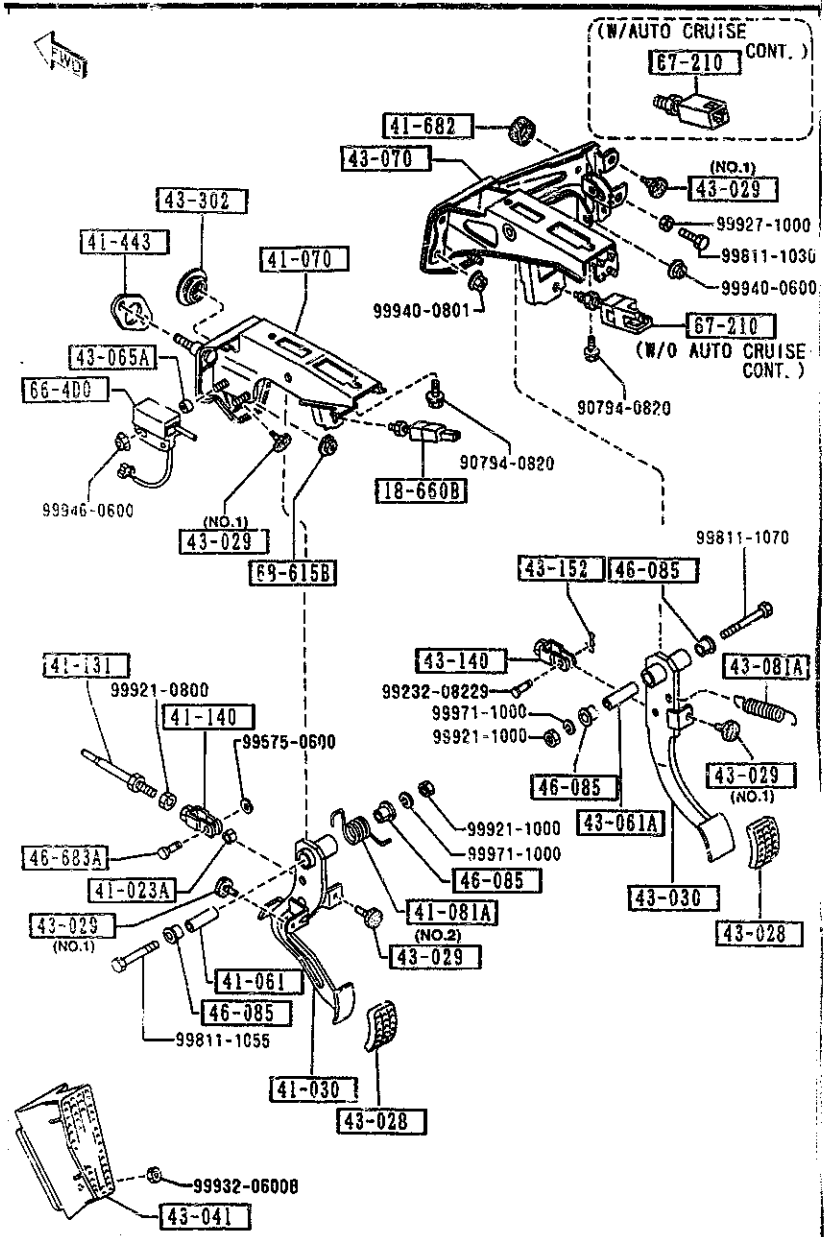

4300 -3 * MANUAL TRANSMISSION CLUTCH & BRAKE PEDALS

PART NO.	QTY	MODEL/RESTRICTION	MODEL/RESTRICTION	MODEL/RESTRICTION	FROM-TO
46-085		BUSH			
1015-46-085	4				
46-683A		PIN			
0223-46-683	1				
66-4D0		SWITCH,CLUTCH CUT			
FB01-66-4D0	1				
67-210		SWITCH,STOP-LAMP			
BR70-66-490A	1	M-25-ED, P.E.GR, L-PKG, PKG-B, PKG-C, (W/AUTO CRUISE.CONT.)			
B001-66-490A	1	BASE, R-PKG, PKG-A, (W/O AUTO CRUISE.CONT.)			
68-615B		NUT,FLANGE-CAP			
B100-68-615	1				

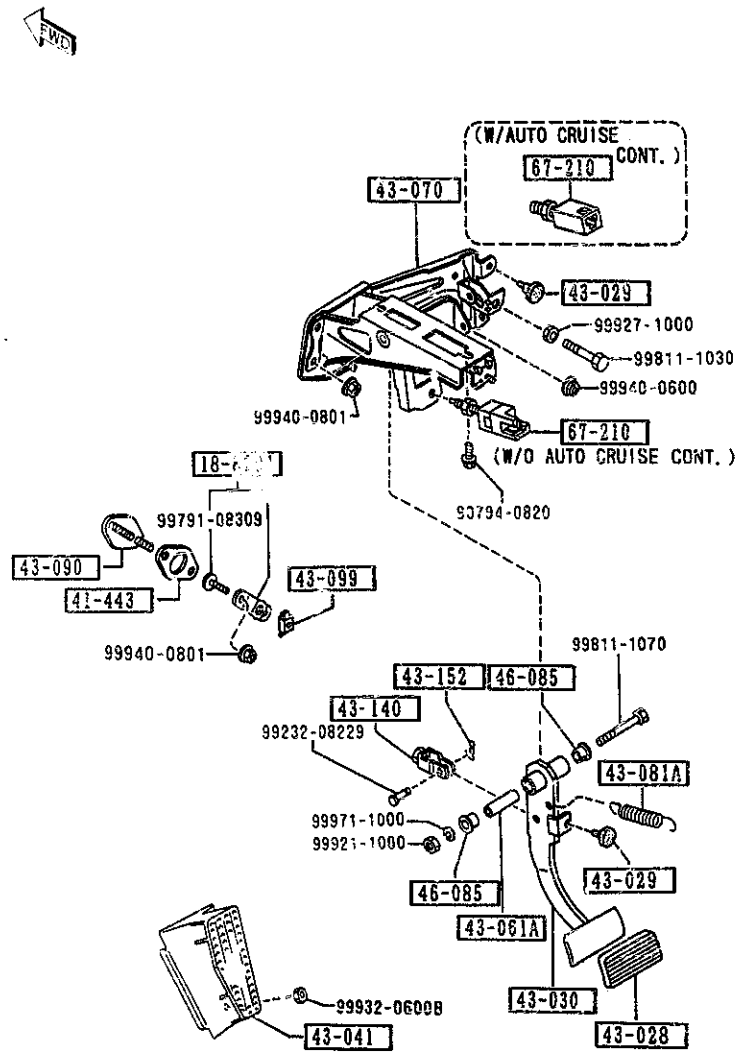

PART NO.	QTY	MODEL/RESTRICTION	MODEL/RESTRICTION	MODEL/RESTRICTION	FROM-TO
18-8201		BRACKET,CONTROL UNIT			
NA75-18-945B	1				
41-443		GASKET			
NA01-41-443	1				
43-028		PAD,PEDAL			
0268-43-028	1				
43-029		RUBBER,STOPPER			
B001-43-029	2	KUROISHI TEKKO			
43-030		PEDAL,BRAKE			
NA03-43-030 AN(NA03-43-030A)	1				-5401
NA03-43-030A A (NA03-43-030B)	1				5401-5508
NA03-43-030B	1				5508-
43-041		REST,FOOT			
NA01-43-041	1				
43-061A		PIPE,PEDAL			
0866-43-062	1				
43-070		BRACKET,MASTER CYL.			
NA01-43-070A	1	BASE, R-PKG, PKG-A, (W/O AUTO CRUISE.CONT.)			-5401
NA02-43-070A	1	M-25-ED, P.E.GR, L-PKG, PKG-B, PKG-C, (W/AUTO CRUISE.CONT.)			-5401
NA01-43-070B	1	BASE, R-PKG, PKG-A, (W/O AUTO CRUISE.CONT.)			5401-
NA02-43-070B	1	M-25-ED, P.E.GR, L-PKG, PKG-B, PKG-C, (W/AUTO CRUISE.CONT.)			5401-
43-081A		SPRING,RETURN-BRAKE			
B092-41-081	1				

5401 NA35* -619598
5508 NA35* -620210

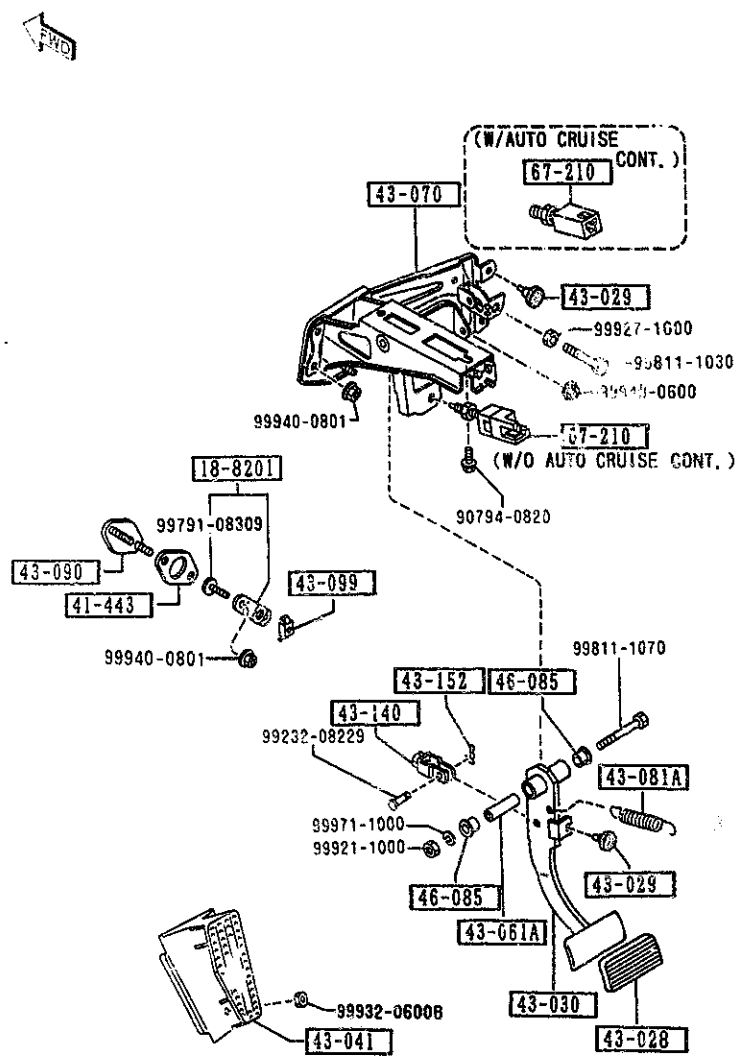

PART NO.	QTY	MODEL/RESTRICTION	MODEL/RESTRICTION	MODEL/RESTRICTION	FROM-TO
43-090		PLATE			
NA03-43-090	1				
43-099		HOLDER,PLATE			
HF23-43-099	1				
43-140		FORK,BRAKE			
1524-43-141	1				
43-152		PIN,SNAP			
D001-43-152	1				
46-085		BUSH			
1015-46-085	2				
67-210		SWITCH,STOP-LAMP			
BR70-66-490A	1	M-25-ED, P.E.GR, L-PKG, PKG-B, PKG-C, (W/AUTO CRUISE.CONT.)			
B001-66-490A	1	BASE, R-PKG, PKG-A, (W/O AUTO CRUISE.CONT.)			

4340 BRAKE MASTER CYLINDER & POWER BRAKE
(W/O ANTILOCK BRAKE)

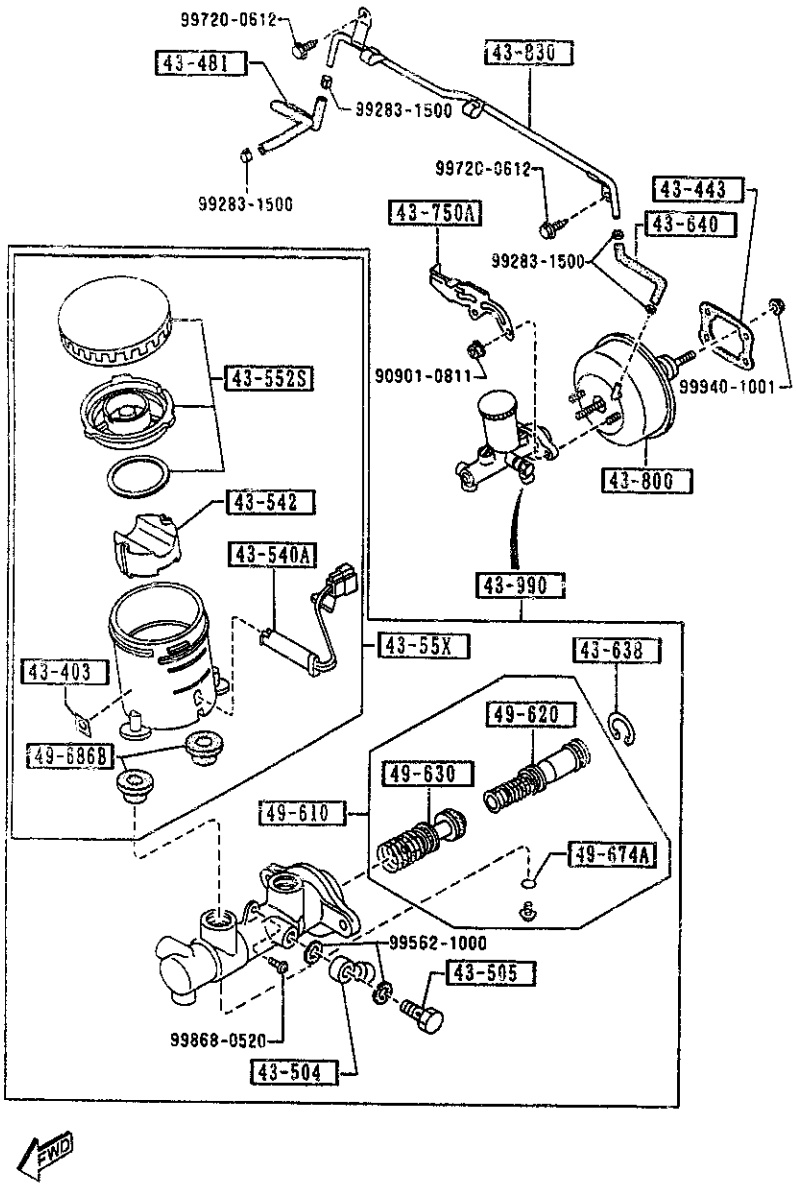

4340 -1 BRAKE MASTER CYLINDER & POWER BRAKE
(W/O ANTILOCK BRAKE)

PART NO.	QTY	MODEL/RESTRICTION	MODEL/RESTRICTION	MODEL/RESTRICTION	FROM TO
43-403		LABEL,ISO			
TA04-43-403A	1				
43-443		GASKET,VAC POWER ASSIST			
H001-43-443	1	NON ASBESTOS			
43-481		HOSE,VACUUM			
NA75-43-481	1				
43-504		JOINT,PIPE			
W023-43-504	1				
43-505		BOLT,CONNECTOR			
W023-43-505	1				
43-540A		SENSOR,RESERVE TANK			
GA97-43-540	1				
43-542		FLOAT			
3597-43-542	1				
43-55X		SET,TANK			
B2Y6-43-55X	1				
43-552S		CAP SET,RESERVE TANK			
D001-49-650A	1				
43-638		RING,RETAINING			
GA02-49-638	1				
43-640		HOSE,VACUUM			
NA01-43-640	1				
43-750A		HOLDER,P.B.VALVE			
NA02-43-750A	1				
43-800		VACUUM POWER ASSIST			
NA75-43-800	1				
43-830		PIPE,VACUUM			

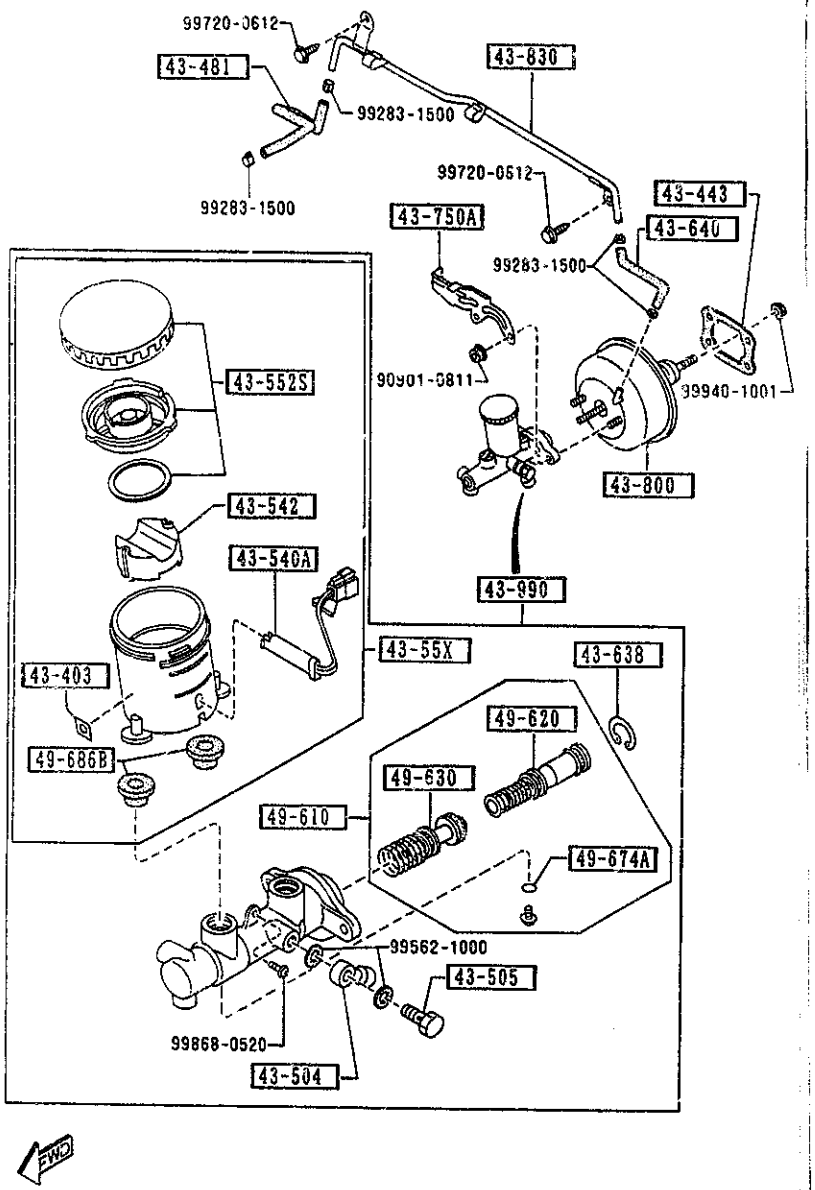

PART NO.	QTY	MODEL/RESTRICTION	MODEL/RESTRICTION	MODEL/RESTRICTION	FROM-TO
CONT'D					
NA01-43-830A	1				
+----------+					
| 43-990 |		CYL.,TANDEM MASTER			
+----------+					
NA01-43-40Z	1				
+----------+					
| 49-610 |		PARTS KIT,INN.-BRAKE			
+----------+					
BW0A-43-61Z	1				
+----------+					
| 49-620 |		PISTON,PRIMARY			
+----------+					
BW0A-43-62Z	1				
+----------+					
| 49-630 |		PISTON,FLOATING			
+----------+					
BW0A-43-63Z	1				
+----------+					
| 49-674A |		RING,'O'-MASTER CYL.			
+----------+					
99541-00403	1				
+----------+					
| 49-686B |		BUSH,ELBOW JOINT			
+----------+					
F100-49-686	2				

(-5901)

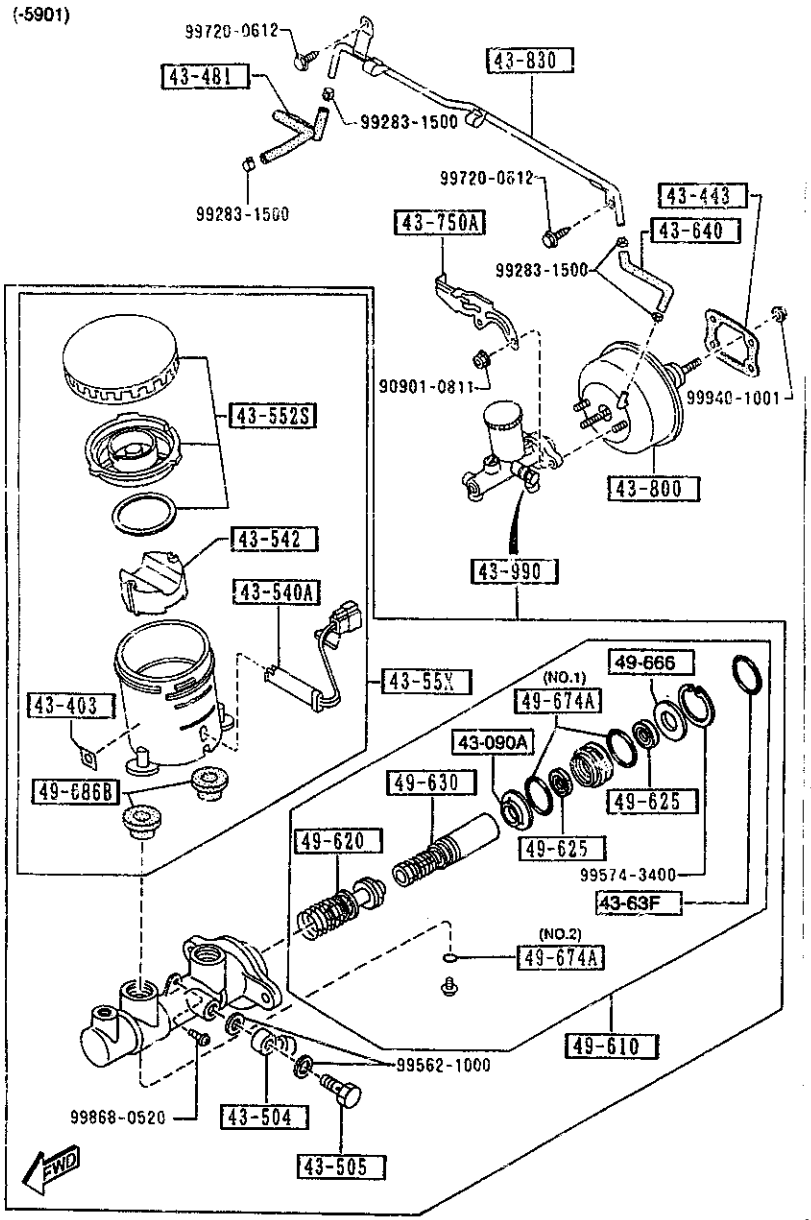

AUNA05

(5901-)

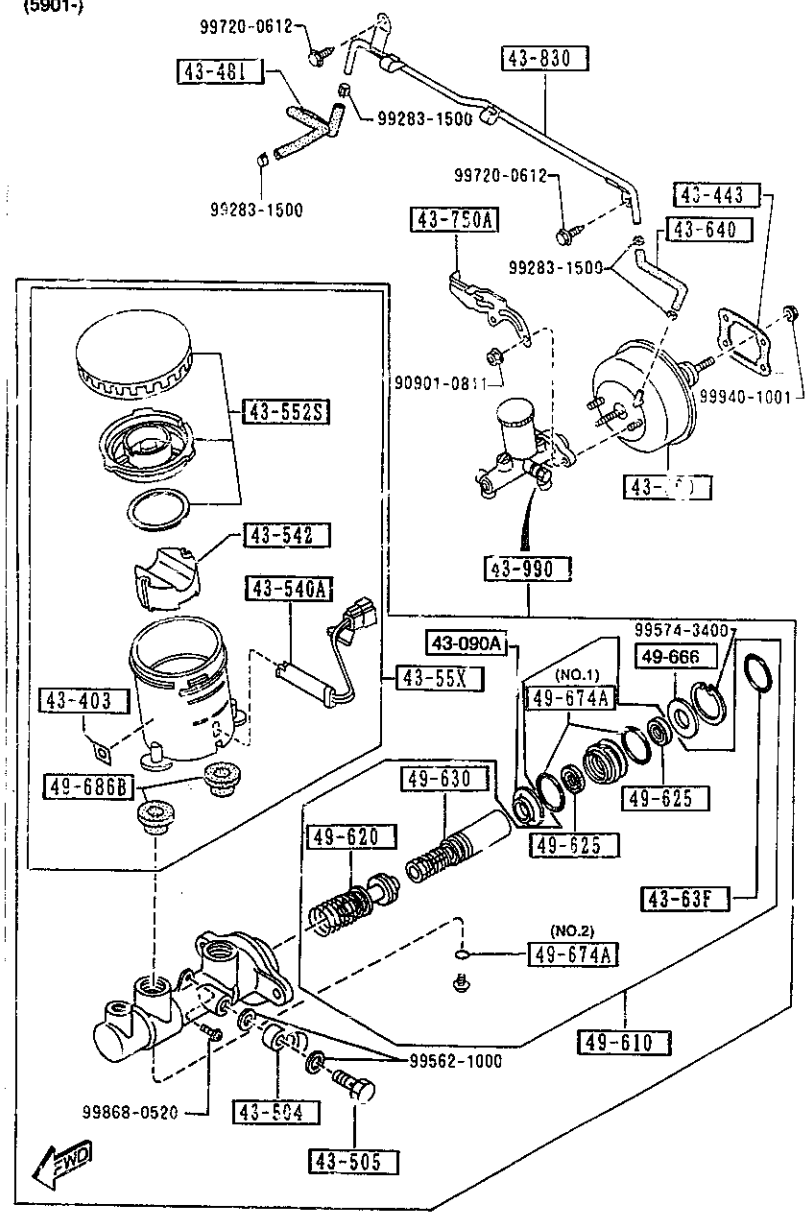

AUNA05

4340 A BRAKE MASTER CYLINDER & POWER BRAKE (W/ANTILOCK BRAKE) (1/2)

(-5901)

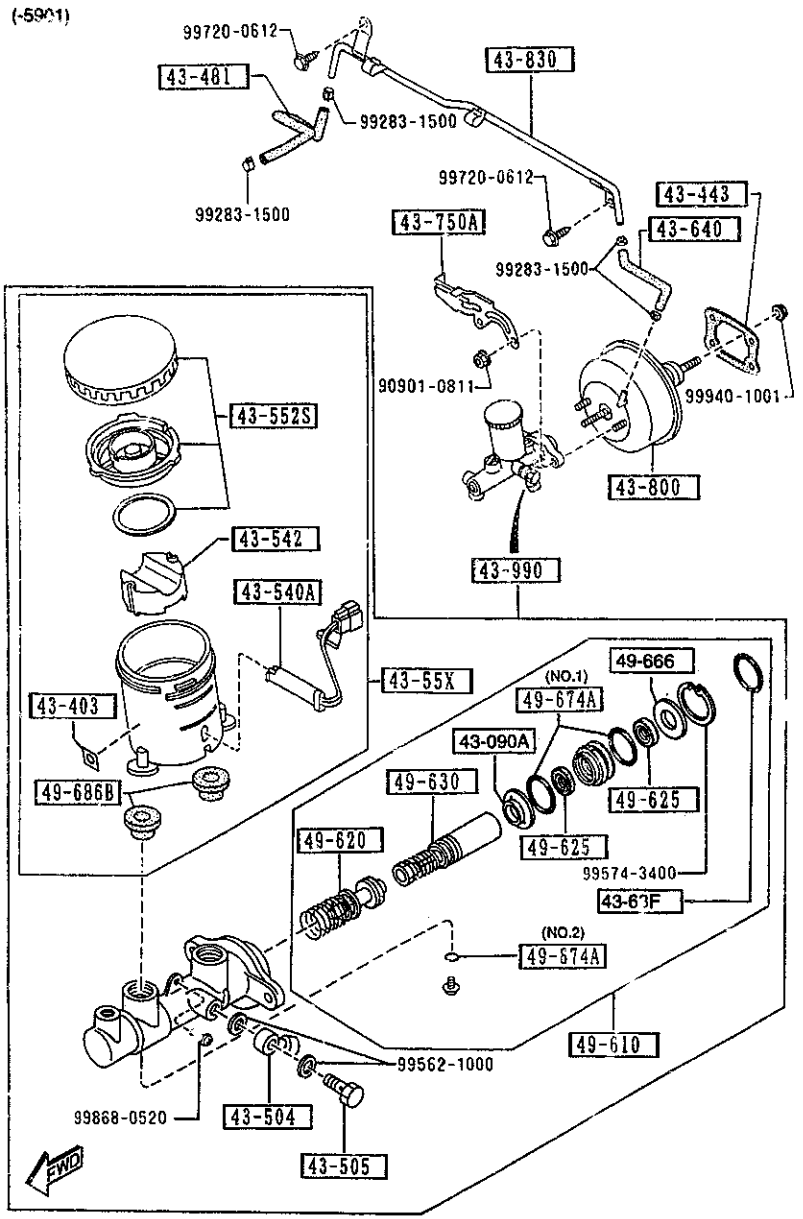

AUNA05

4340 A-1 BRAKE MASTER CYLINDER & POWER BRAKE (W/ANTILOCK BRAKE)

PART NO.	QTY	MODEL/RESTRICTION	MODEL/RESTRICTION	MODEL/RESTRICTION	FROM-TO
43-090A		STOPPER			
B252-49-514	1				
43-403		LABEL,ISO			
TA04-43-403A	1				
43-443		GASKET,VAC POWER ASSIST			
H001-43-443	1	NON ASBESTOS			
43-481		HOSE,VACUUM			
NA75-43-481	1				
43-504		JOINT,PIPE			
W023-43-504	1				
43-505		BOLT,CONNECTOR			
W023-43-505	1				
43-540A		SENSOR,RESERVE TANK			
GA97-43-540	1				
43-542		FLOAT			
3597-43-542	1				
43-55X		SET,TANK			
NAY3-43-55X	1				
43-552S		CAP SET,RESERVE TANK			
D001-49-650A	1				
43-63F		RING,'O'			
B252-49-512	1				
43-640		HOSE,VACUUM			
NA01-43-640	1				
43-750A		HOLDER,P.B.VALVE			
NA02-43-750A	1				
43-800		VACUUM POWER ASSIST			

CAT. AUNA05-04

1997-07

(5901-)

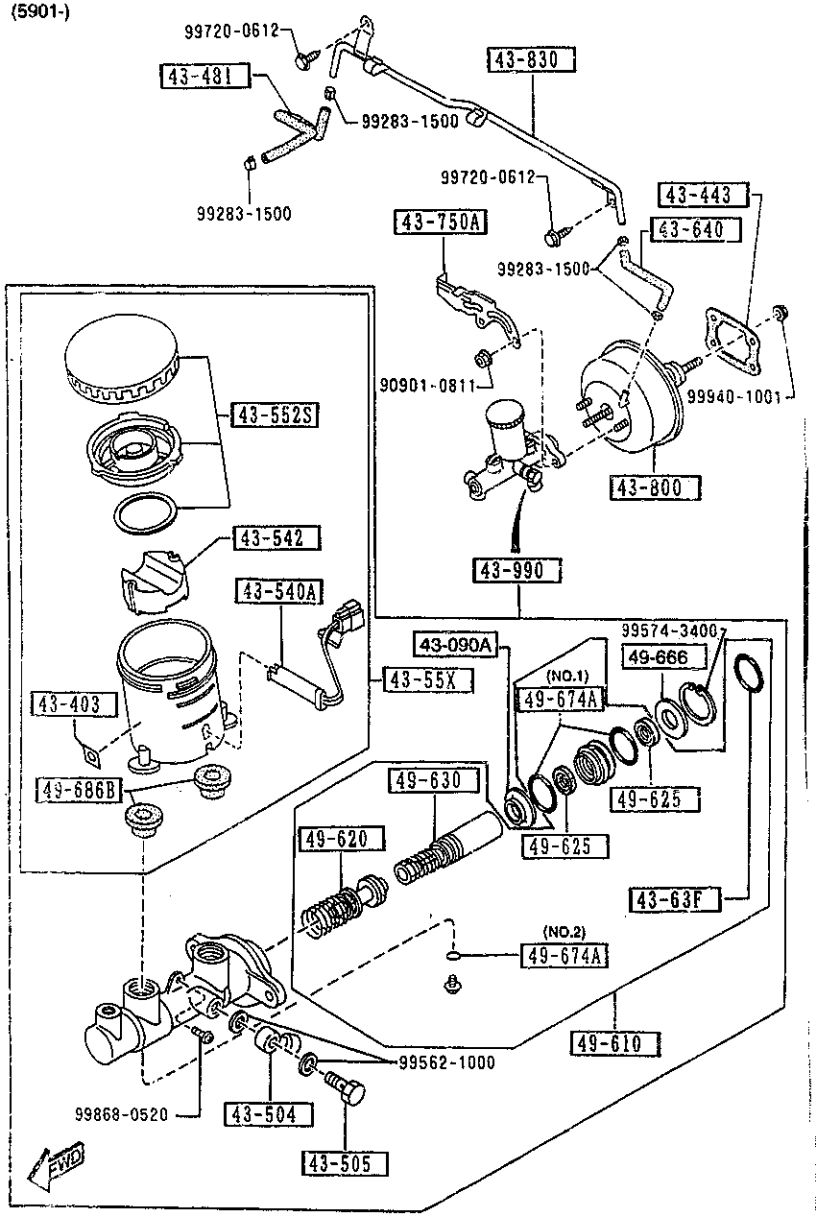

AUNA05

PART NO.	QTY	MODEL/RESTRICTION	MODEL/RESTRICTION	MODEL/RESTRICTION	FROM-TO
CONT'D					
NA80-43-800	1				
43-830		PIPE,VACUUM			
NA23-43-630B	1				
43-990		CYL.,TANDEM MASTER			
NA23-43-40Z	1				
A (NA23-43-40ZA)					-6116
*NA23-43-40ZA	1				6116-
49-610		PARTS KIT,INN.-BRAKE			
NAY3-43-41Z	1				-5901
NAY3-43-41ZA	1				5901-6116
*D1Y2-43-41Z	1				6116-
49-620		PISTON,PRIMARY			
B252-49-620A	1				
49-625		CUP,SECONDARY			
NA23-43-625	2				
49-630		PISTON,FLOATING			
NA23-43-63Z	1				
49-666		WASHER,STOP			
B252-49-666	1				
49-674A		RING,'O'-MASTER CYL.			
NA23-43-515	2	SHINEI KOGYO (ILLUST. NO.1)			
99541-00603	1	NOK (ILLUST. NO.2)			
49-686B		BUSH,ELBOW JOINT			
F100-49-686	2				

5901 NA3** -702989
6116 NA3** -709695

CAT. AUNA05-04

1997-07

4360 BRAKE PIPINGS
(W/O ANTI LOCK BRAKE SYSTEM)

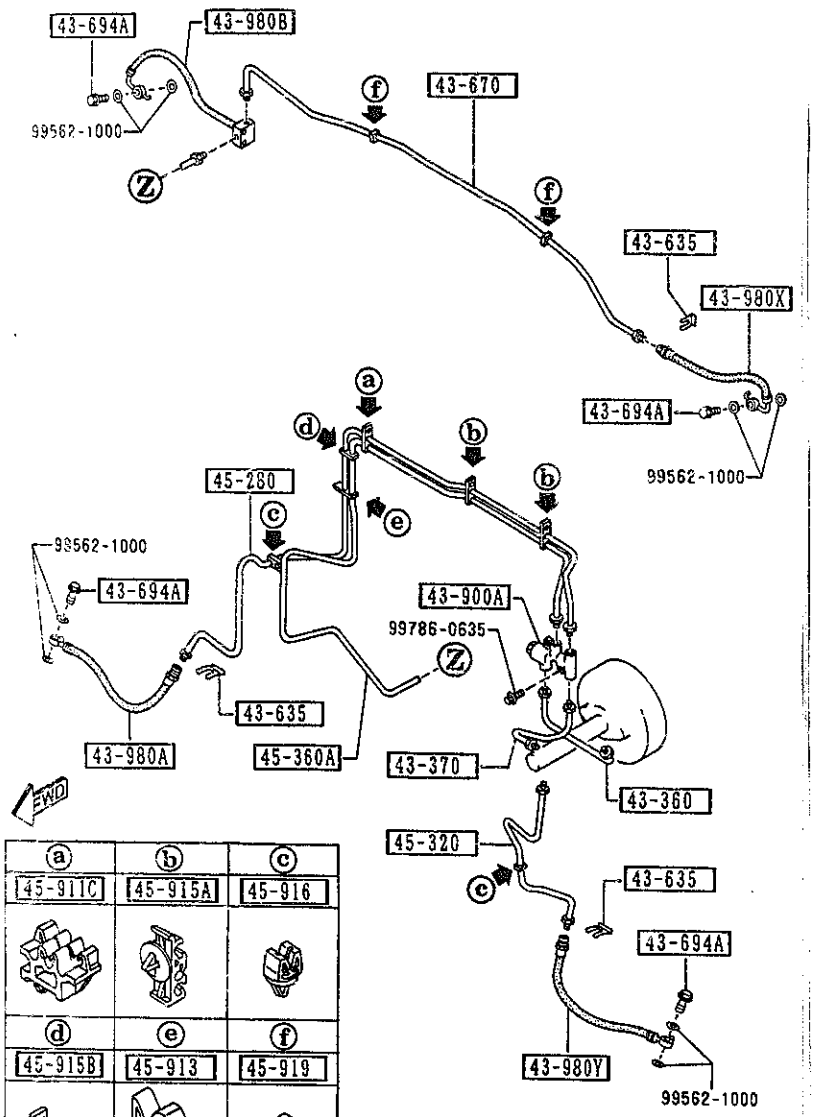

AUNA05

4360 -1 BRAKE PIPINGS
(W/O ANTI LOCK BRAKE SYSTEM)

PART NO.	QTY	MODEL/RESTRICTION	MODEL/RESTRICTION	MODEL/RESTRICTION	FROM-TO
43-360		PIPE,BRAKE			
NA01-43-360A	1				
43-370		PIPE,BRAKE			
NA01-43-370	1				
43-635		CLIP,FLEXIBLE HOSE			
W023-43-635 A (W023-43-635A)	3				-4927
W023-43-635A	3				4927-
43-670		PIPE,BRAKE-REAR			
NA01-43-670A	1				
43-694A		BOLT,CONNECTOR			
B001-43-694A	4				
43-900A		VALVE,P.B.			
H380-43-900	1				
43-980A		HOSE(R),FLEXIBLE-FRT			
NA75-43-810	1				
43-980B		HOSE(R),FLEXIBLE-RR			
NA75-43-980	1				
43-980X		HOSE(L),FLEXIBLE-RR			
NA75-43-990	1				
43-980Y		HOSE(L),FLEXIBLE-FRT			
NA75-43-820	1				
45-280		PIPE(R),BRAKE-FRONT			
NA75-45-280	1				
45-320		PIPE(L),BRAKE-FRONT			
NA01-45-320C	1				-4A03
NA01-45-320D	1				4A03-
45-360A		PIPE,BRAKE-REAR			
NA75-45-360A	1				

4927 NA35* -603489
4A03 NA35* -603621

CAT. AUNA05-04

1997-07

4360 BRAKE PIPINGS
(W/O ANTI LOCK BRAKE SYSTEM)

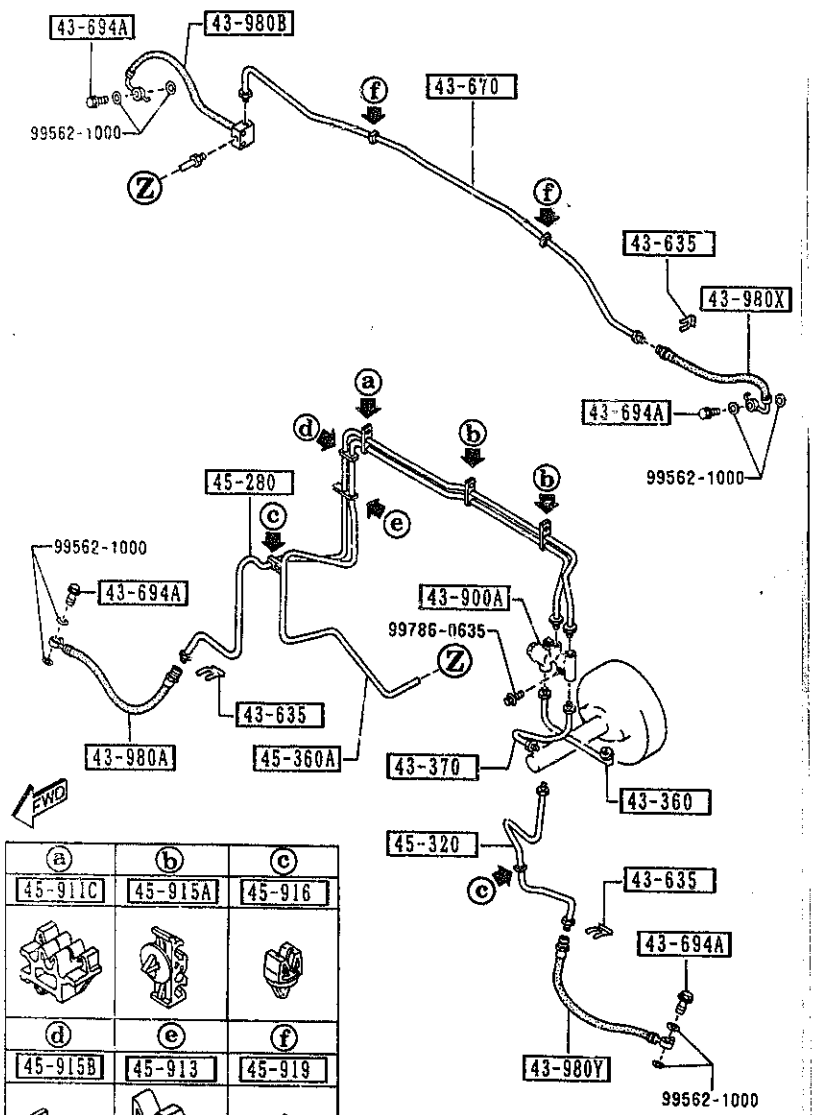

4360 -2 * BRAKE PIPINGS
(W/O ANTI LOCK BRAKE SYSTEM)

PART NO.	QTY	MODEL/RESTRICTION	MODEL/RESTRICTION	MODEL/RESTRICTION	FROM-TO
45-911C		CLIP,PIPE			
NA01-45-911	1				
45-913		HOLDER,PIPE			
NA75-45-913	1				
45-915A		HOLDER,PIPE			
B001-45-915	2				
45-915B		HOLDER,PIPE			
NA01-45-915A	1				
45-916		HOLDER,PIPE			
BC1D-45-916	2				
45-919		CLIP,PIPE			
B001-45-919B	2				

4360 A BRAKE PIPINGS
(ANTI LOCK BRAKE SYSTEM)

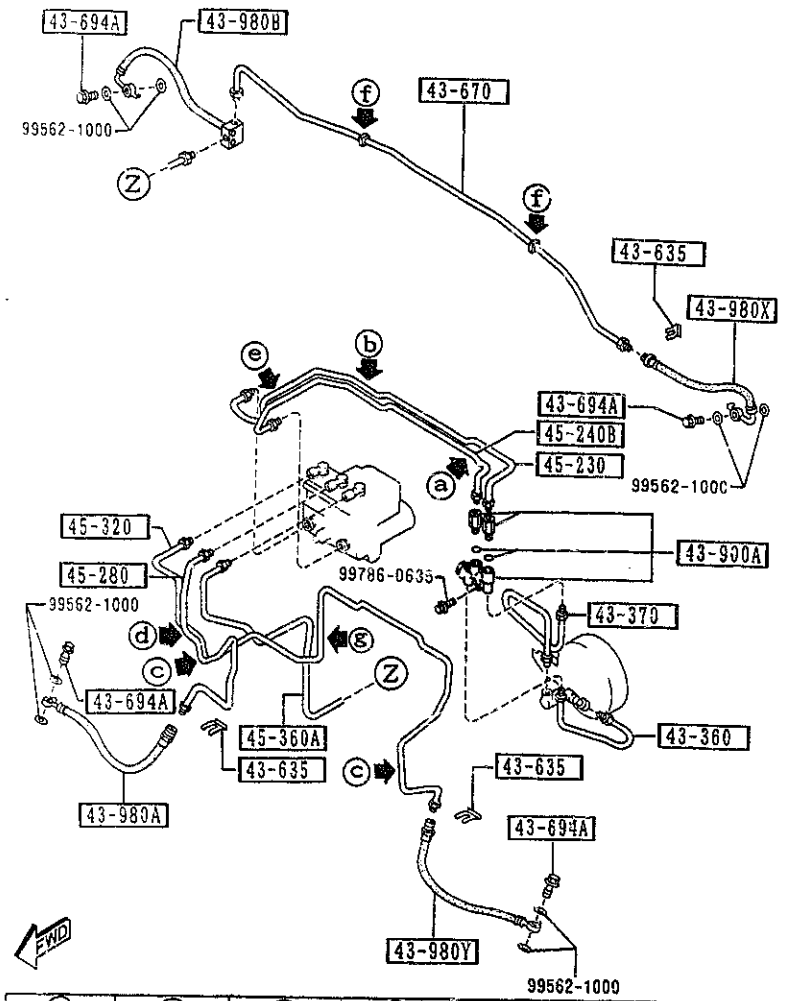

ⓐ	ⓑ	ⓒ	ⓓ	ⓔ	ⓕ	ⓖ
45-910E	45-920	45-916	43-919A	45-916A	45-919	45-919C

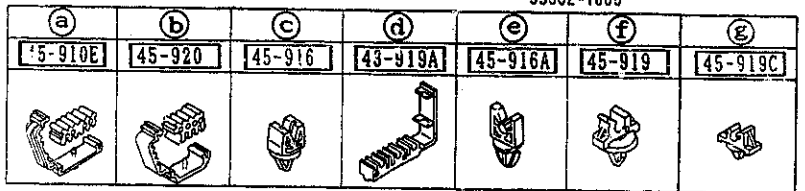

AUNA05

4360 A-1 BRAKE PIPINGS
(ANTI LOCK BRAKE SYSTEM)

PART NO.	QTY	MODEL/RESTRICTION	MODEL/RESTRICTION	MODEL/RESTRICTION	FROM-TO
43-360		PIPE,BRAKE			
NA23-43-360A	1				
43-370		PIPE,BRAKE			
NA23-43-370A	1				
43-635		CLIP,FLEXIBLE HOSE			
W023-43-635 A (W023-43-635A)	3				-4927
W023-43-635A	3				4927-
43-670		PIPE,BRAKE-REAR			
NA01-43-670A	1				
43-694A		BOLT,CONNECTOR			
B001-43-694A	4				
43-900A		VALVE,P.B.			
F123-43-900	1				
43-919A		HOLDER,BRAKE PIPE			
NA20-45-915	1				
43-980A		HOSE(R),FLEXIBLE-FRT			
NA75-43-810	1				
43-980B		HOSE(R),FLEXIBLE-RR			
NA75-43-980	1				
43-980X		HOSE(L),FLEXIBLE-RR			
NA75-43-990	1				
43-980Y		HOSE(L),FLEXIBLE-FRT			
NA75-43-820	1				
45-230		PIPE NO.3,MAIN BRAKE			
NB13-45-230A	1				
45-240B		PIPE,BRAKE-FRT			
NB13-45-240A	1				

4927 NA35* -603489

CAT. AUNA05-04

1997-07

4360 A BRAKE PIPINGS
(ANTI LOCK BRAKE SYSTEM)

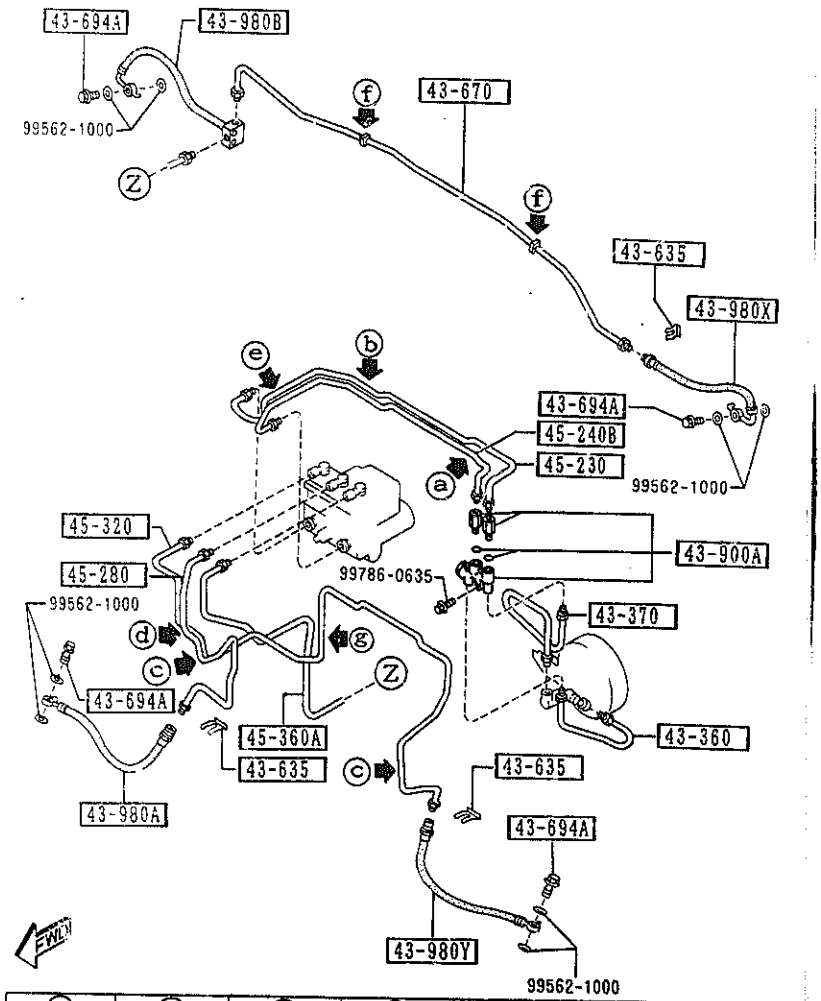

ⓐ	ⓑ	ⓒ	ⓓ	ⓔ	ⓕ	ⓖ
45-910E	45-920	45-916	43-919A	45-916A	45-919	45-919C

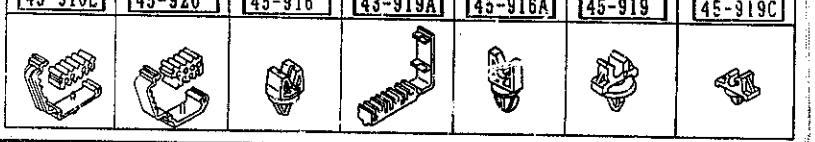

AUNA05

4360 A-2 * BRAKE PIPINGS
(ANTI LOCK BRAKE SYSTEM)

PART NO.	QTY	MODEL/RESTRICTION	MODEL/RESTRICTION	MODEL/RESTRICTION	FROM-TO
45-280		PIPE(R),BRAKE-FRONT			
NB13-45-280	1				
45-320		PIPE(L),BRAKE-FRONT			
NB13-45-320A	1				
45-360A		PIPE,BRAKE-REAR			
NB13-45-360B	1				
45-910E		HOLDER,PIPE			
NA20-45-910A	1				
45-916		HOLDER,PIPE			
BC1D-45-916	2				
45-916A		HOLDER,PIPE			
HG31-45-915	1				
45-919		CLIP,PIPE			
B001-45-919B	2				
45-919C		CLIP,PIPE			
G030-45-919A	1				
45-920		BRACKET			
NA20-45-920B	1				

CAT. AUNA05-04

1997-07