Parts Catalog

Mazda MX-5 MIATA U.S.A. ('95►'96)

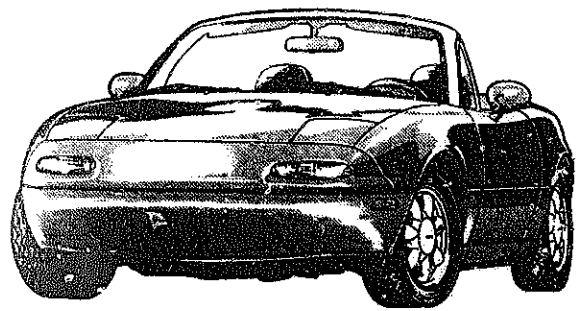

NA35•-600001~700000
NA3••-700001~800000

Jul.'97 (FINAL)

Catalog No. AU-NA05-04

mazda

© 1997 Mazda Motor Corporation

LAYOUT OF CONTENTS / DISPOSITION TYPOGRAPHIQUE DE CONTENU / DISPOSICION DEL CONTENIDO / ANORDNUNG DES INHALTS

- The following is a typical example of the layout of contents on Mazda microfiche parts catalog.
- Voici un exemple typique de la disposition typographique de contenu dans les microfiches de catalogue des pièces de Mazda.
- El siguiente es un ejemplo típico de la disposición del contenido en una microficha del catálogo de repuestos de Mazda.
- Folgendes ist ein typisches Beispiel der Inhaltsanordnung des Mazda-Mikrofiche-Teilekatalogs.

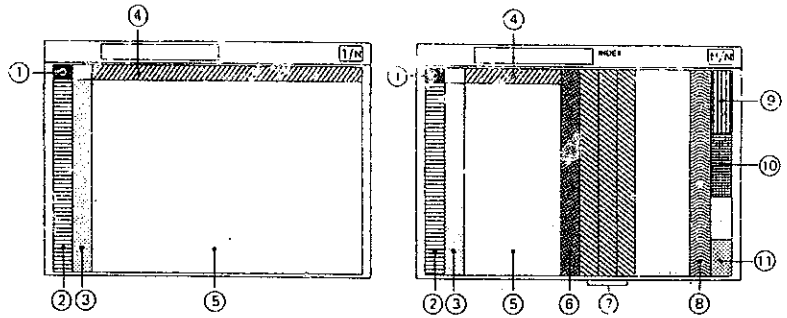

Remark : The items listed under ④ have been deleted from each fiche since Dec. '93

① • Layout of contents
• Disposition Typographique de Contenu
• Disposición del contenido
• Anordnung des Inhalts

② • Pictorial Index
• Index des Schémas
• Índice Gráfico
• Illustrierter Index

③ • Master Section No. Index
• Index des Numéros des Sections Totale
• Indice del Número de la Sección Maéstra
• Hauptabschnittsnummer-Index

④ ~~• Section No. Index for the Column~~
~~• Index des Numéros des Sections pour les Colonnes~~
~~• N° de la Sección para el Indice~~
~~• Abschnittsnummer-Index für die Spalte~~

⑤ • Illustration & Text
• Illustrations et Textes
• Ilustración y Texto
• Abbildung und Text

⑥ • Part No. Index
• Index des Numéros des Pièces
• Indice del N° de Pieza
• Teile-Nr.-Index

⑦ • Alphabetical Index
• Index Alphabétique
• Indice Alfabético
• Alphabetischer Index

⑧ • Model Identification
• Identification des Modèles
• Identificación del Modelo
• Modell-Kennzeichnung

⑨ • Vehicle Identification System
• Système d'Identification de Véhicule
• Sistema de Identificación de Vehículo
• Fahrzeug-Identifikationssystem

PICTORIAL INDEX

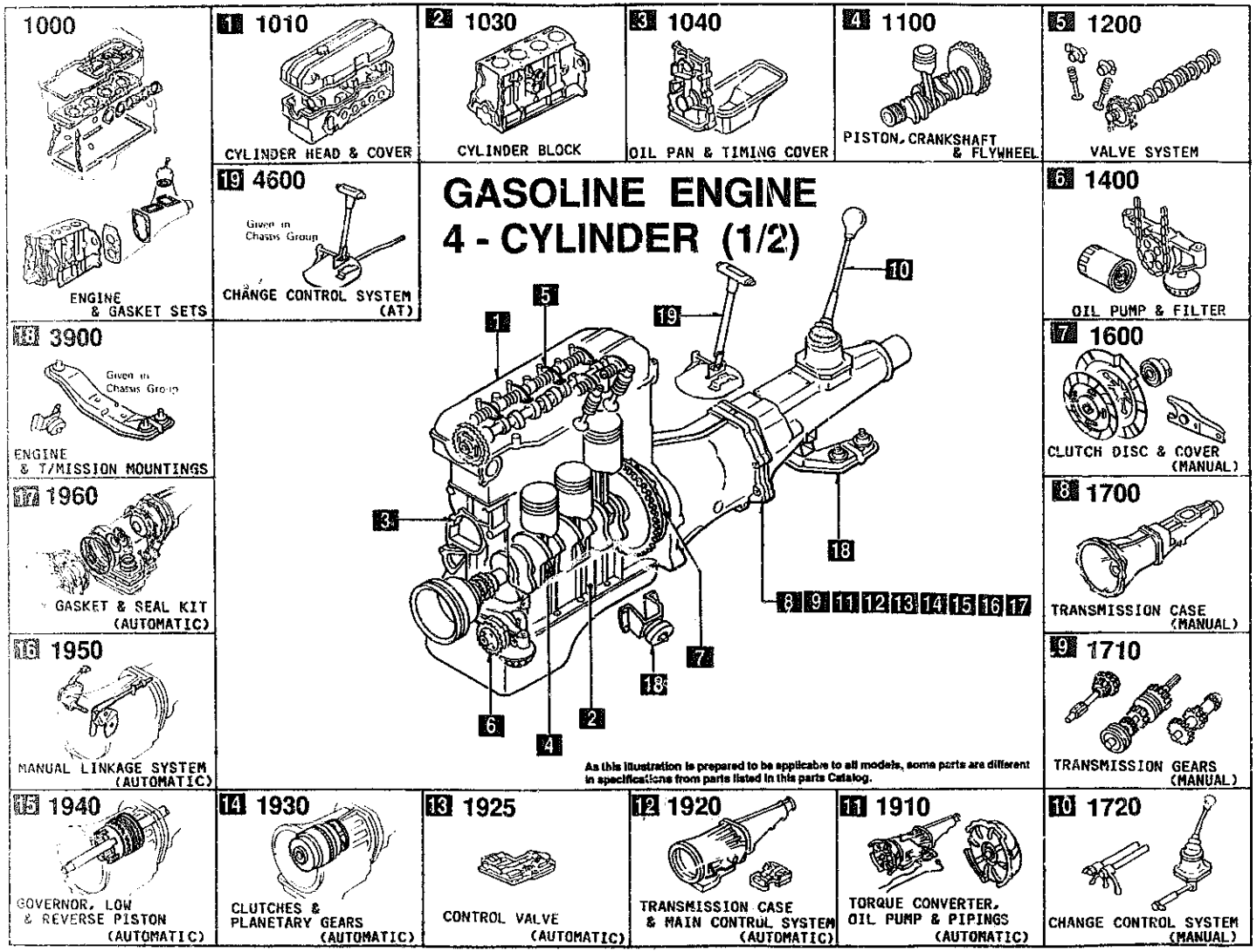

PICTORIAL INDEX

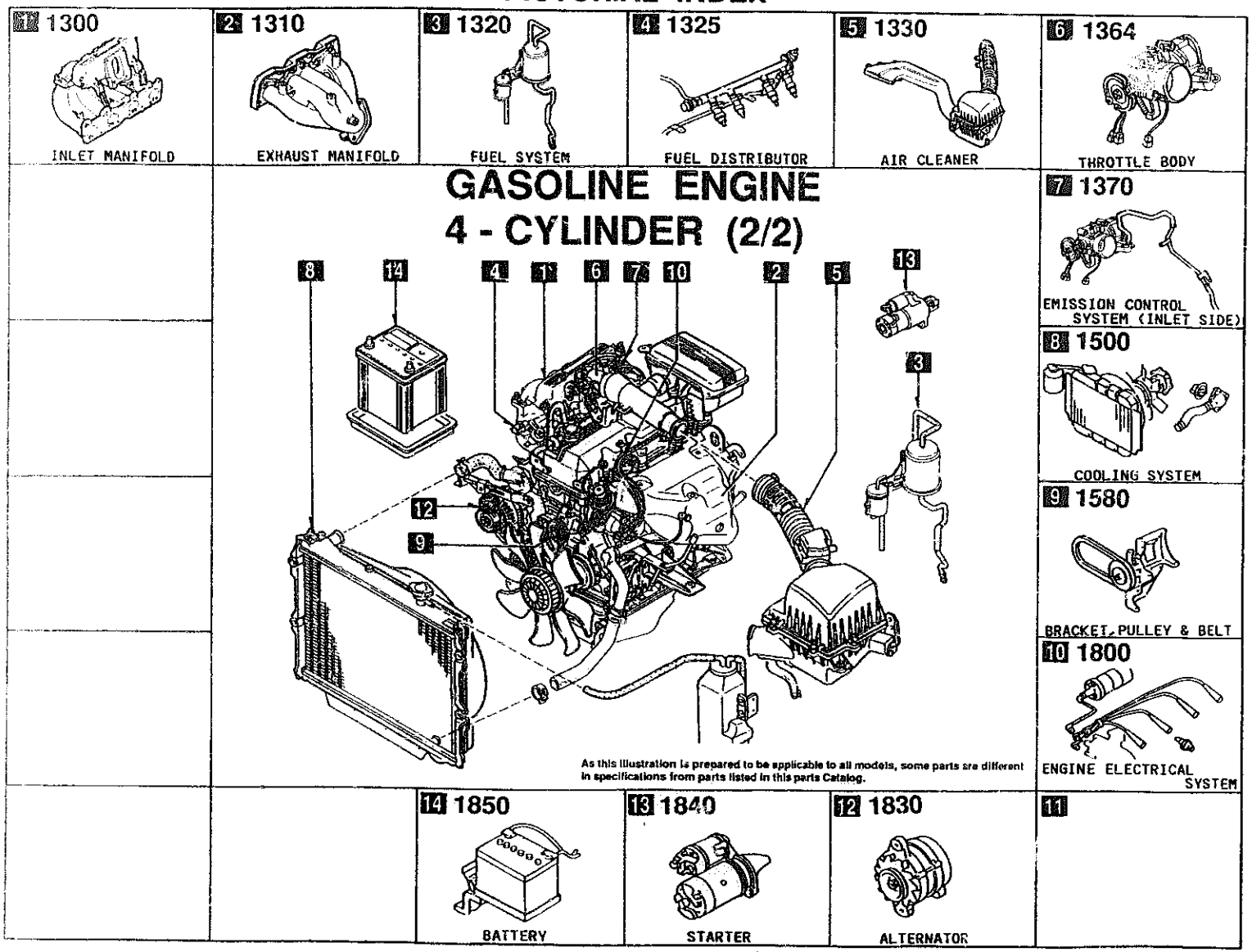

PICTORIAL INDEX

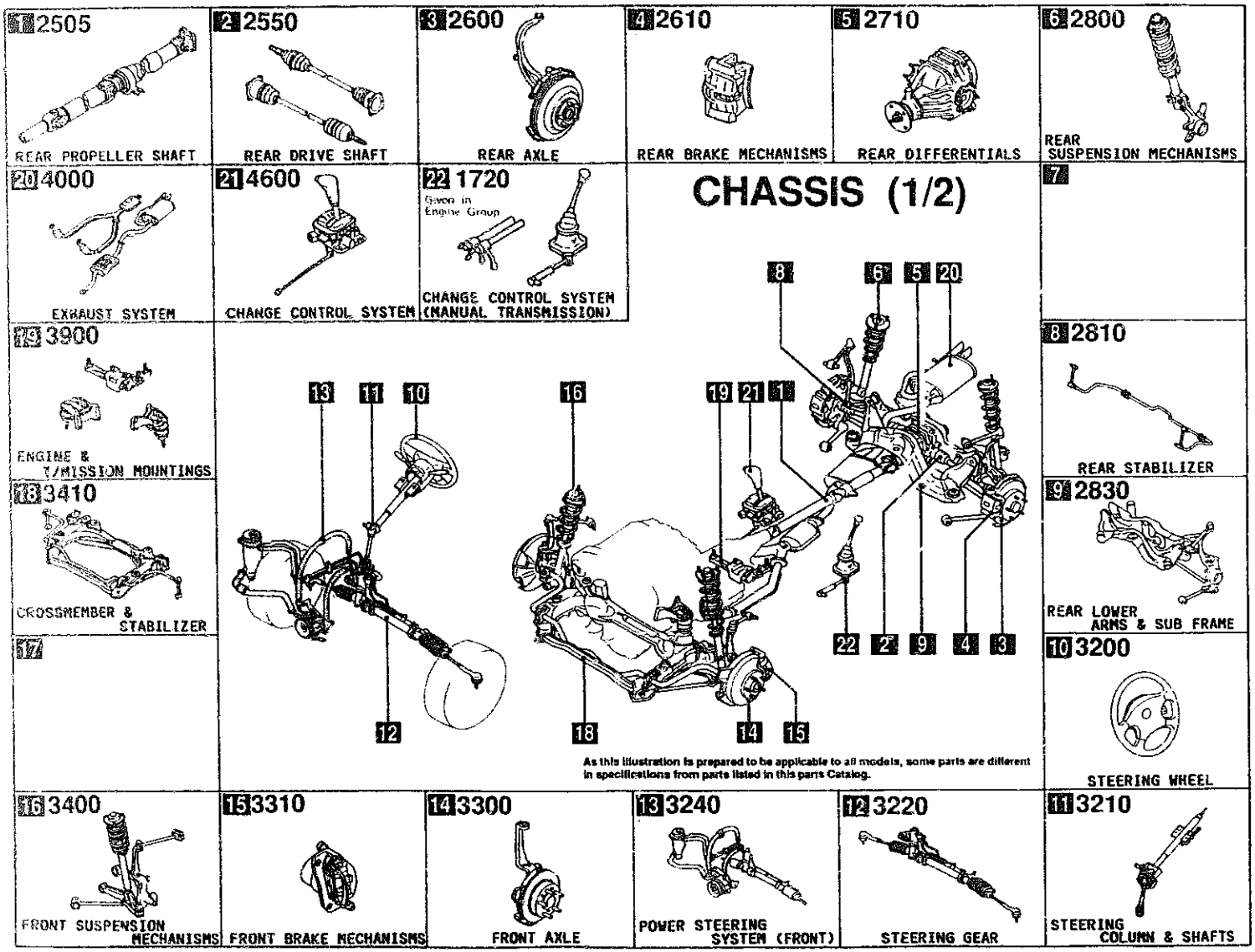

PICTORIAL INDEX

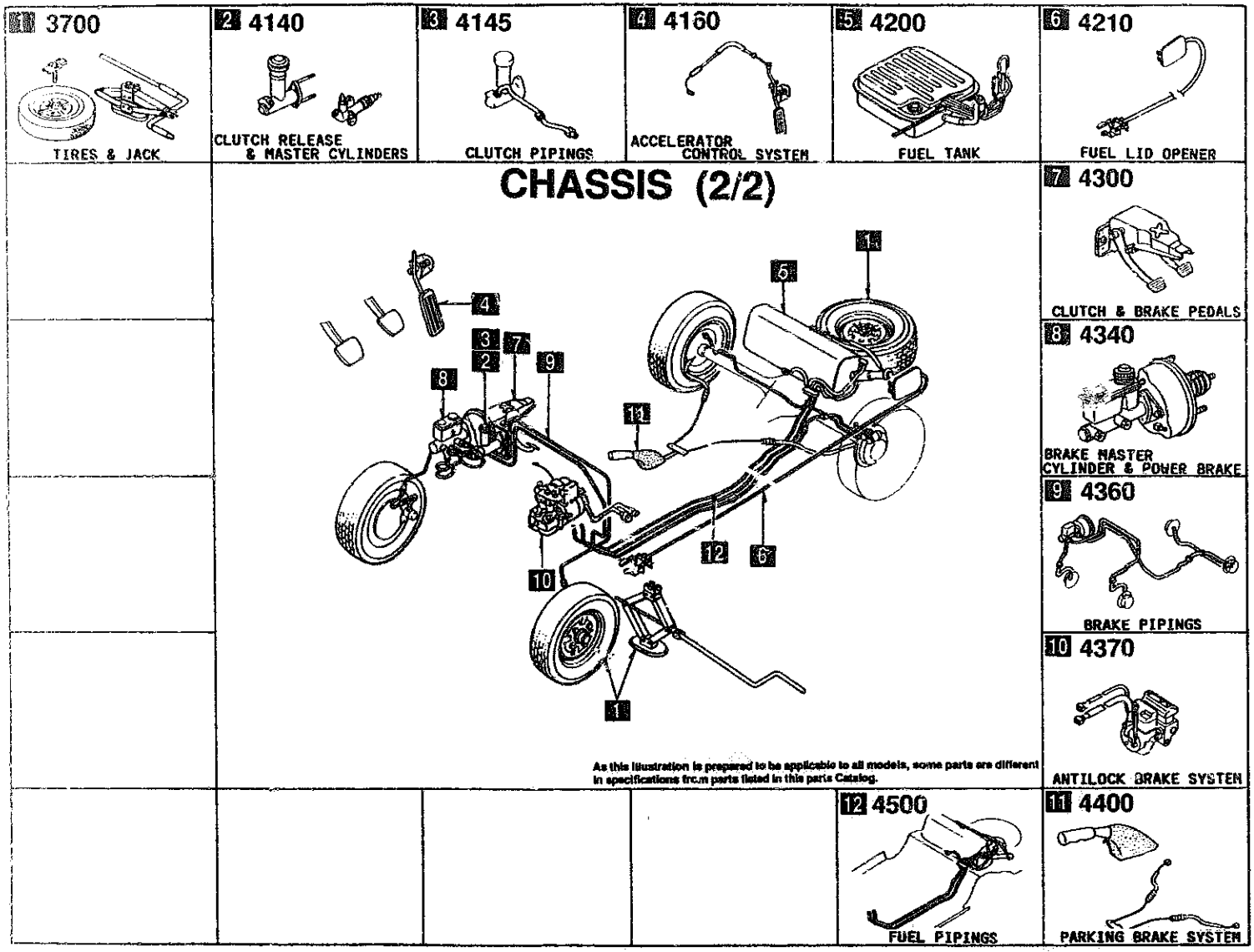

PICTORIAL INDEX

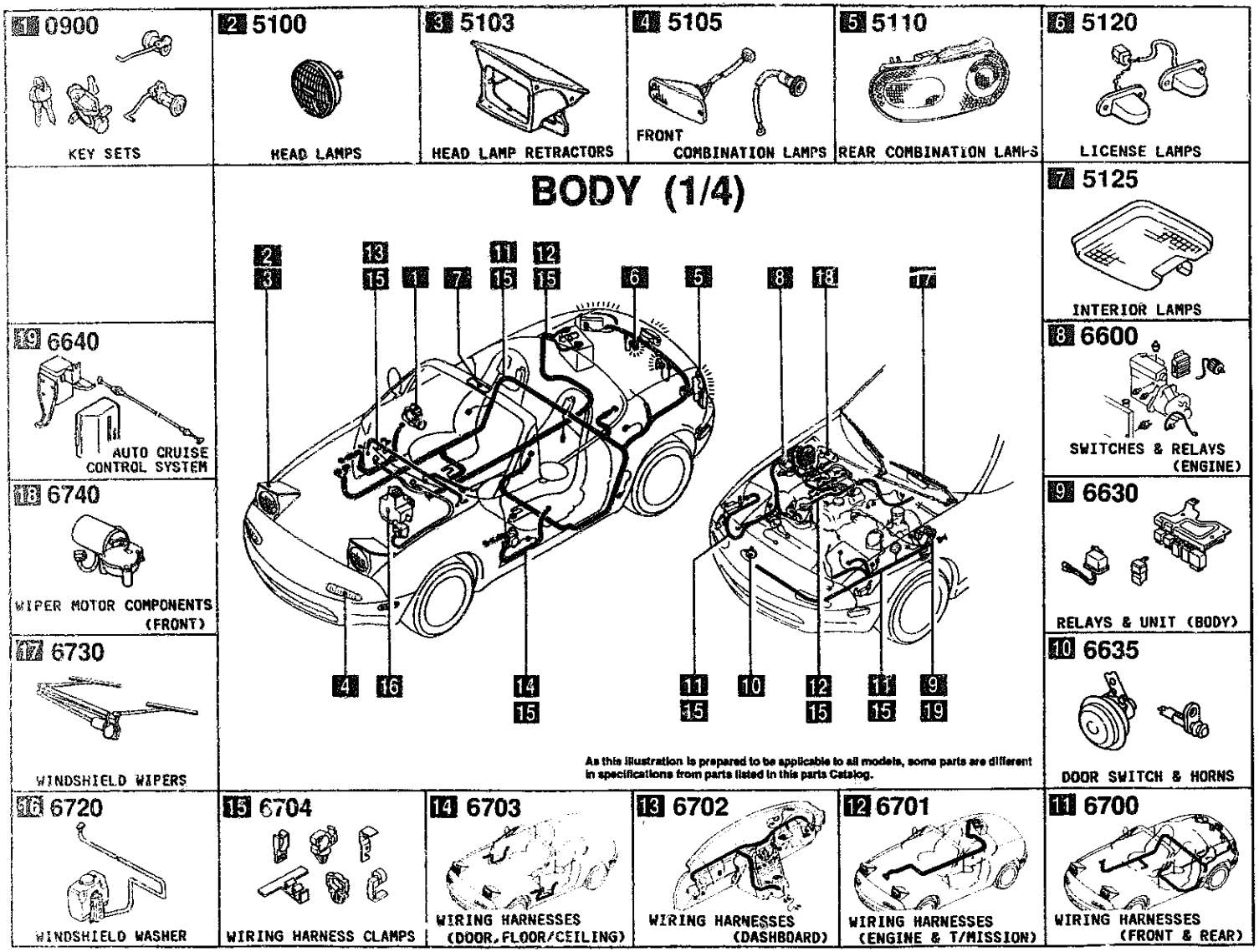

PICTORIAL INDEX

1 5000

FRONT BUMPER

2 5010

REAR BUMPER

3 5030
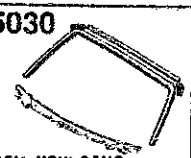
WINDOW MOULDING & COWL GRILLES

4 5170


ORNAMENTS

5 5180
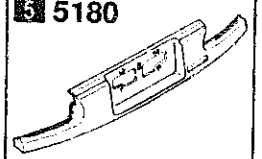
REAR FINISHER

6 5230

BONNET

BODY (2/4)

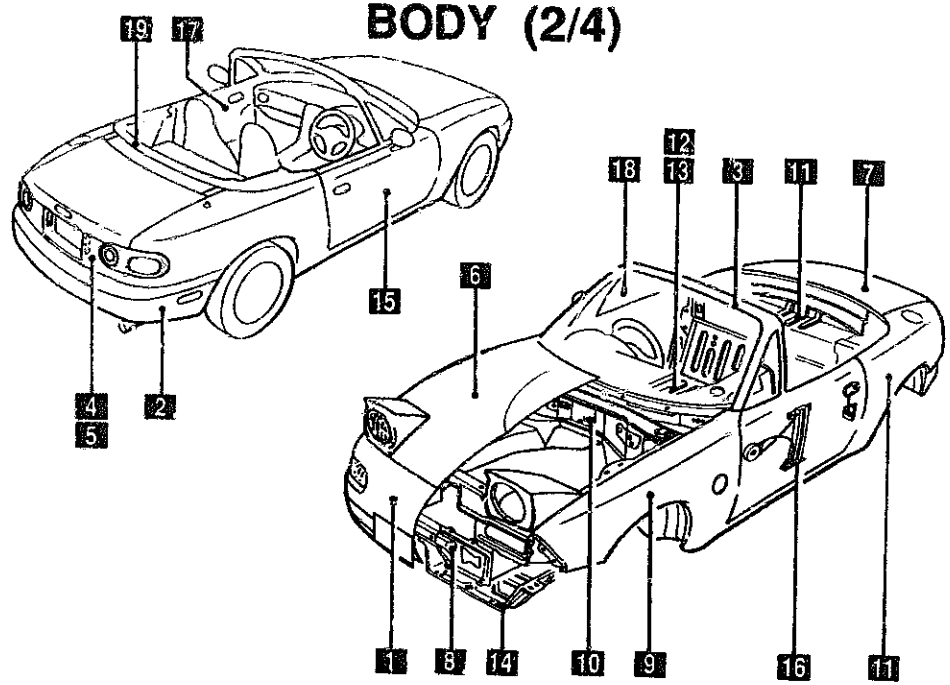

19 6330
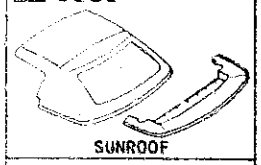
SUNROOF

18 6300

WINDOW GLASSES

17 5840

FRONT DOOR TRIMS & RELATED PARTS

16 5830
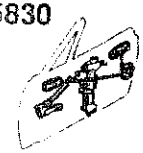
FRONT DOOR MECHANISMS

15 5800
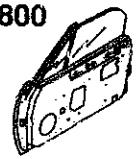
FRONT DOORS

14 5390

FLOOR ATTACHMENTS

13 5380

FLOOR ATTACHMENTS (HOLE COVERS)

12 5370
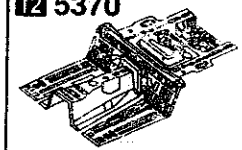
FLOOR PANELS

11 5340
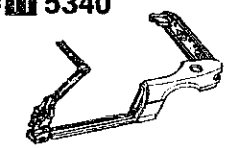
SIDE PANELS

7 5260

TRUNK LID

8 5310
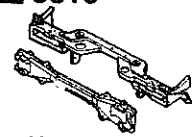
FRONT PANELS

9 5320

FENDER & WHEEL APRON PANELS

10 5330
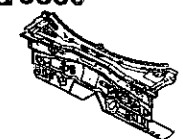
DASH & COWL PANELS

PICTORIAL INDEX

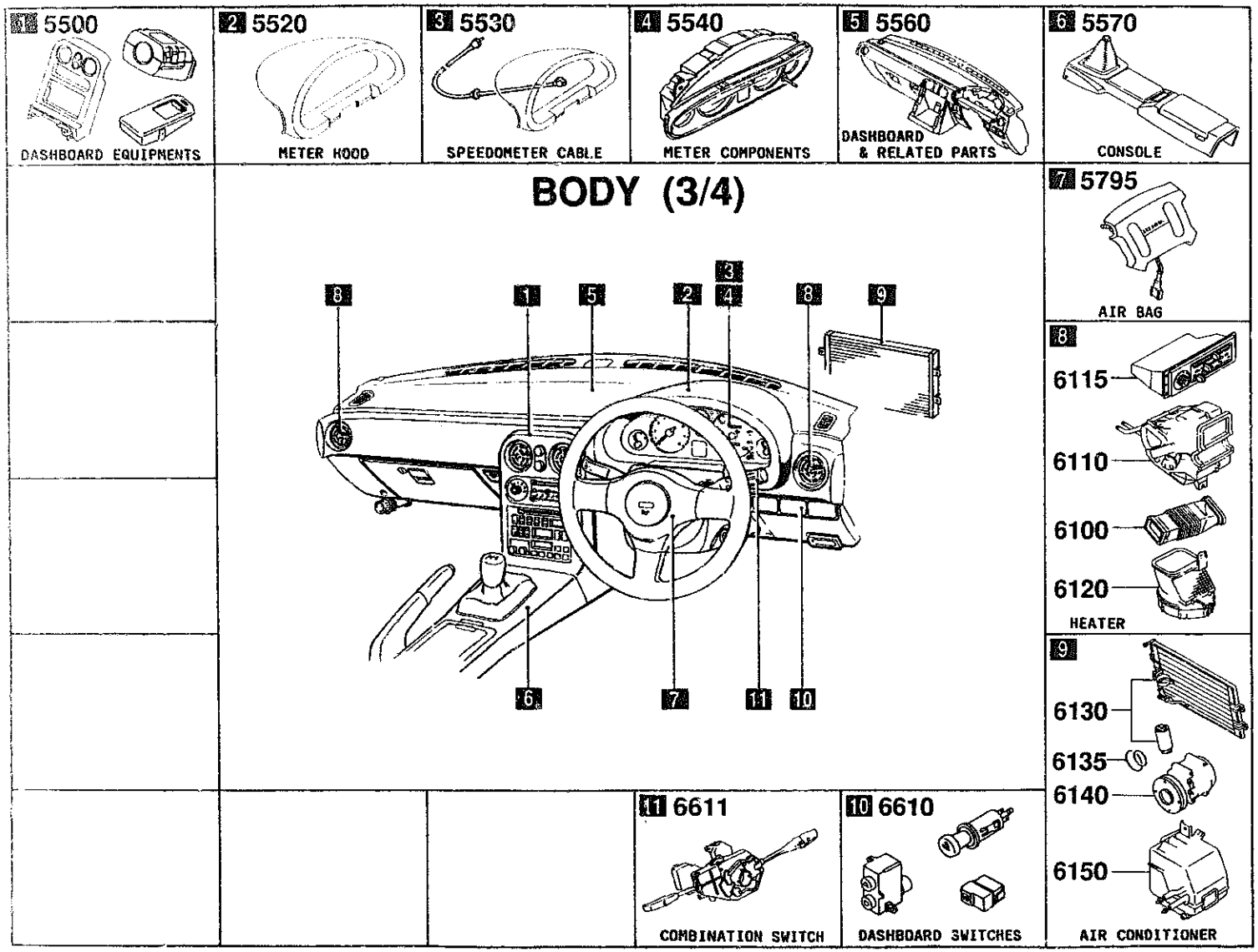

PICTORIAL INDEX

1 5580
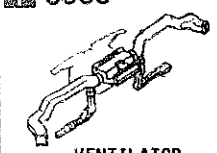
VENTILATOR

2 5700

SEATS

3 5790

SEAT BELTS

4 6680

AUDIO SYSTEMS (RADIO & TAPE DECK)

5 6682
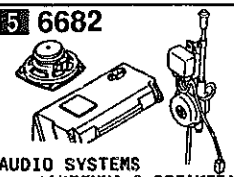
AUDIO SYSTEMS (ANTENNA & SPEAKER)

6 6820
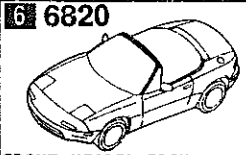
FRONT HEADER TRIM & PILLAR TRIMS

7 6840
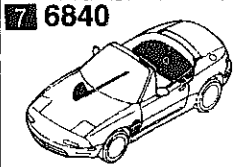
TRIMS & SCUFF PLATES

8 6860
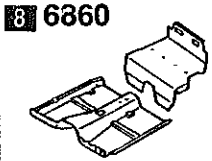
FLOOR MATS & PADS

9 6870

SERVICE TOOLS

10 6900

VISORS, ASSIST HANDLES & MIRRORS

11 6930

CAUTION PLATES & LABELS

12 7250
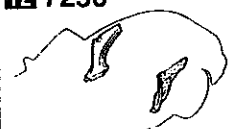
QUARTER WINDOW & TRIMS

BODY (4/4)

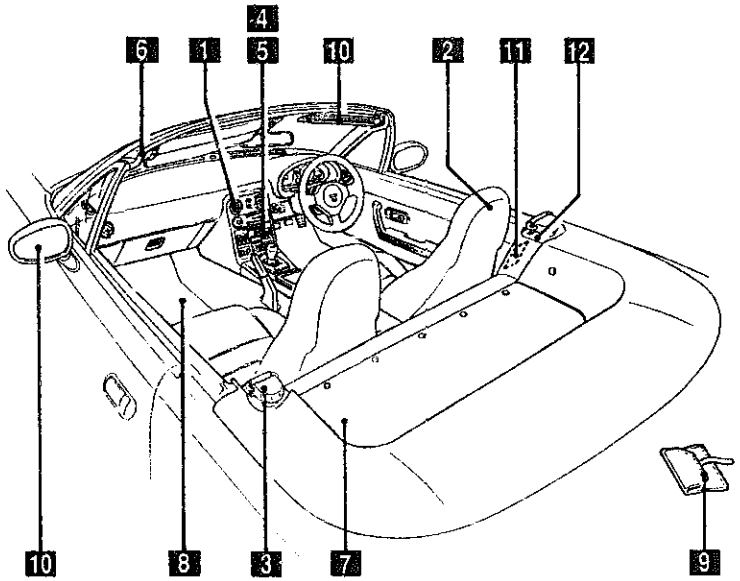

As this illustration is prepared to be applicable to all models, some parts are different in specifications from parts listed in this parts Catalog.

SECTION NAME INDEX (ENGINE)

LO.NO	SEC.NO	SECTION NAME	LO.NO	SEC.NO	SECTION NAME	LO.NO	SEC.NO	SECTION NAME
1-C03	1000	ENGINE & GASKET SETS	1-K09	1950	AUTOMATIC TRANSMISSION MANUAL LINKAGE SYSTEM			
1-E03	1010	CYLINDER HEAD & COVER	1-M09	1960	AUTOMATIC TRANSMISSION GASKET & SEAL KIT			
1-H03	1030	CYLINDER BLOCK						
1-J03	1040	OIL PAN & TIMING COVER						
1-L03	1100	PISTON, CRANKSHAFT & FLYWHEEL						
1-C04	1200	VALVE SYSTEM						
1-E04	1300	INLET MANIFOLD						
1-F04	1310	EXHAUST MANIFOLD						
1-G04	1320	FUEL SYSTEM						
1-I04	1325	FUEL DISTRIBUTOR						
1-J04	1330	AIR CLEANER						
1-L04	1364	THROTTLE BODY						
1-M04	1370	EMISSION CONTROL SYSTEM (INLET SIDE)						
1-C05	1400	OIL PUMP & FILTER						
1-E05	1500	COOLING SYSTEM						
1-H05	1580	BRACKET, PULLEY & BELT						
1-C06	1600	CLUTCH DISC & COVER						
1-D06	1700	MANUAL TRANSMISSION CASE						
1-E06	1710	MANUAL TRANSMISSION GEARS						
1-J06	1720	MANUAL TRANSMISSION CHANGE CONTROL SYSTEM						
1-M06	1800	ENGINE ELECTRICAL SYSTEM						
1-C07	1830	ALTERNATOR						
1-E07	1840	STARTER (MT)						
1-G07	1840 A	STARTER (AT)						
1-I07	1850	BATTERY						
1-J07	1910	AUTOMATIC TRANSMISSION TORQUE CONVERTER, OIL PUMP & PIPINGS						
1-M07	1920	AUTOMATIC TRANSMISSION CASE & MAIN CONTROL SYSTEM						
1-F08	1925	AUTOMATIC TRANSMISSION CONTROL VALVE						
1-M08	1930	AUTOMATIC TRANSMISSION CLUTCHES & PLANETARY GEARS						
1-H09	1940	AUTOMATIC TRANSMISSION GOVERNOR, LOW & REVERSE PISTON						

CATLOG-NO= AUNA05-04

DATE. 1997-07

SECTION NAME INDEX (CHASSIS)

LO.NO	SEC.NO	SECTION NAME
1-C11	2505	REAR PROPELLER SHAFT
1-D11	2550	REAR DRIVE SHAFT
1-F11	2600	REAR AXLE
1-G11	2610	REAR BRAKE MECHANISMS
1-J11	2710	REAR DIFFERENTIALS (NORMAL DIFF.)
1-C12	2710 A	REAR DIFFERENTIALS (LIMITED SLIP DIFF.)
1-G12	2800	REAR SUSPENSION MECHANISMS
1-H12	2810	REAR STABILIZER
1-I12	2830	REAR LOWER ARMS & SUB FRAME
1-K12	3200	STEERING WHEEL
1-L12	3210	STEERING COLUMN & SHAFTS
1-M12	3220	STEERING GEAR (W/O POWER STEERING)
1-C15	3220 A	STEERING GEAR (W/POWER STEERING)
1-H13	3240	POWER STEERING SYSTEM
1-K13	3300	FRONT AXLE (W/O ANTILOCK BRAKE)
1-L13	3300 A	FRONT AXLE (W/ANTILOCK BRAKE)
1-M13	3310	FRONT BRAKE MECHANISMS
1-N13	3400	FRONT SUSPENSION MECHANISMS
1-E14	3410	CROSSMEMBER & STABILIZER
1-F14	3700	TIRES & JACK
1-C15	3900	ENGINE & T/MISSION MOUNTINGS
1-D15	4000	EXHAUST SYSTEM
1-F15	4140	MANUAL TRANSMISSION CLUTCH RELEASE & MASTER CYLINDERS
1-G15	4145	MANUAL TRANSMISSION CLUTCH PIPINGS
1-H15	4160	ACCELERATOR CONTROL SYSTEM
1-I15	4200	FUEL TANK
1-L15	4210	FUEL LID OPENER
1-M15	4300	MANUAL TRANSMISSION CLUTCH & BRAKE PEDALS
1-D16	4300A	AUTOMATIC TRANSMISSION BRAKE PEDAL
1-F16	4345	BRAKE MASTER CYLINDER & POWER BRAKE (W/O ANTILOCK BRAKE)
1-H16	4340 A	BRAKE MASTER CYLINDER & POWER BRAKE (W/ANTILOCK BRAKE)
1-K16	4360	BRAKE PIPINGS (W/O ANTI LOCK BRAKE SYSTEM)
1-M16	4360 A	BRAKE PIPINGS (ANTI LOCK BRAKE SYSTEM)
2-C03	4370	ANTILOCK BRAKE SYSTEM
2-E03	4400	PARKING BRAKE SYSTEM
2-G03	4500	FUEL PIPINGS
2-I03	4600	CHANGE CONTROL SYSTEM (AT)

SECTION NAME INDEX (BODY)

LO.NO	SEC.NO	SECTION NAME
2-C05	0900	KEY SETS
2-E05	5000	FRONT BUMPER
2-H05	5010	REAR BUMPER
2-J05	5030	WINDOW MOULDING & COWL GRILLES
2-K05	5100	HEAD LAMPS
2-L05	5103	HEAD LAMP RETRACTORS
2-C06	5105	FRONT COMBINATION LAMPS
2-E06	5110	REAR COMBINATION LAMPS
2-H06	5120	LICENSE LAMPS
2-I06	5125	INTERIOR LAMPS
2-J06	5170	ORNAMENTS
2-K06	5180	REAR FINISHER
2-L06	5230	BONNET
2-N06	5260	TRUNK LID
2-D07	5310	FRONT PANELS
2-E07	5320	FENDER & WHEEL APRON PANELS
2-H07	5330	DASH & COWL PANELS
2-I07	5340	SIDE PANELS
2-N07	5370	FLOOR PANELS
2-E08	5380	FLOOR ATTACHMENTS (HOLE COVERS)
2-F08	5390	FLOOR ATTACHMENTS
2-C09	5500	DASHBOARD EQUIPMENTS
2-F09	5520	METER HOOD
2-G09	5530	SPEEDOMETER CABLE
2-H09	5540	METER COMPONENTS
2-K09	5560	DASHBOARD & RELATED PARTS
2-N09	5570	CONSOLE
2-E10	5580	VENTILATOR
2-G10	5700	SEATS
2-I12	5790	SEAT BELTS
2-J12	5795	AIR BAG
2-K12	5800	FRONT DOORS
2-N12	5830	FRONT DOOR MECHANISMS
2-F13	5840	FRONT DOOR TRIMS & RELATED PARTS
2-C14	6100	HEATER
2-D14	6110	HEATER UNIT COMPONENTS
2-E14	6115	HEATER CONTROL COMPONENTS
2-G14	6120	HEATER BLOWER COMPONENTS
2-H14	6130	AIR CONDITIONER
2-L14	6135	AIR CONDITIONING COOLING PIPE O-RING
2-M14	6140	AIR CONDITIONING COMPRESSOR COMPONENTS
2-C15	6150	AIR CONDITIONING COOLING UNIT
2-D15	6300	WINDOW GLASSES
2-E15	6330	SUN ROOF
2-E16	6600	ENGINE SWITCHES & RELAYS
2-J16	6610	DASHBOARD SWITCHES
2-L16	6611	COMBINATION SWITCH
2-M16	6630	BODY RELAYS & UNIT
3-C03	6635	DOOR SWITCH & HORNS
3-D03	6640	AUTO CRUISE CONTROL SYSTEM
3-E03	6680	AUDIO SYSTEMS (RADIO & TAPE DECK)
3-K03	6682	AUDIO SYSTEMS (ANTENNA & SPEAKER)
3-N03	6700	FRONT & REAR WIRING HARNESSES
3-F04	6701	ENGINE & TRANSMISSION WIRING HARNESSES
3-G04	6702	DASHBOARD WIRING HARNESSES
3-H04	6703	DOOR, FLOOR & CEILING WIRING HARNESSES
3-I04	6704	WIRING HARNESS CLAMPS
3-L04	6720	WINDSHIELD WASHER (W/O ANTI LOCK BRAKE)
3-N04	6720 A	WINDSHIELD WASHER (W/ANTI LOCK BRAKE)
3-E05	6730	WINDSHIELD WIPERS
3-G05	6740	WIPER MOTOR COMPONENTS
3-H05	6820	FRONT HEADER TRIM & PILLAR TRIMS
3-I05	6840	TRIMS & SCUFF PLATES
3-L05	6860	FLOOR MATS & PADS
3-C06	6870	SERVICE TOOLS
3-D06	6900	SUN VISORS, ASSIST HANDLES & MIRRORS
3-G06	6930	CAUTION PLATES & LABELS
3-I06	7250	QUARTER WINDOW & TRIMS



23-800

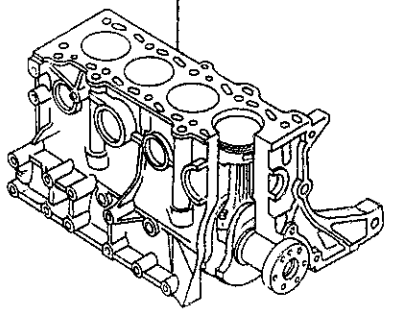

02-300

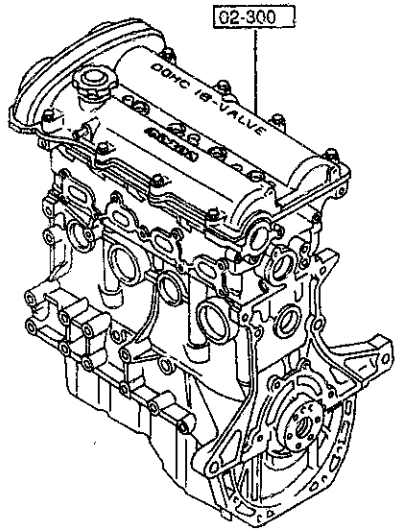

AUNA05

10-271S

1-SEAL, VALVE	(8)
2-SEAL, VALVE	(8)
3-GASKET, HEAD COVER	(1)
4-GASKET, CYLINDER HEAD	(1)
5-GASKET, OIL PAN	(1)
6-GASKET, OIL PAN	(1)
7-GASKET (L)	(1)
8-GASKET (INN), TIMING BELT (L)	(1)
9-GASKET (C), TIMING BELT (L)	(1)
10-GASKET, T. BELT, COVER-C.	(1)
11-RUBBER, SEAL-SEAL PLATE	(1)
12-SEAL, OIL	(1)
13-SEAL, OIL	(2)
14-SEAL, OIL	(1)
15-GASKET, IN. MANIFOLD	(1)
16-GASKET, EX. MANIFOLD	(1)
17-RING, 'O'	(1)
18-GASKET, WATER PUMP	(1)
19-GASKET, W. PUMP INLET	(1)
20-GASKET, THERMOSTAT COVER	(1)
21-RING, 'O'	(1)

10-235S

1-SEAL, VALVE	(8)
2-SEAL, VALVE	(8)
3-GASKET, HEAD COVER	(1)
4-GASKET, CYLINDER HEAD	(1)
12-SEAL, OIL	(1)
13-SEAL, OIL	(2)
15-GASKET, IN. MANIFOLD	(1)
16-GASKET, EX. MANIFOLD	(1)
20-GASKET, THERMOSTAT COVER	(1)

02-310S

15-GASKET, IN. MANIFOLD	(1)
16-GASKET, EX. MANIFOLD	(1)
19-GASKET, W. PUMP INLET	(1)
20-GASKET, THERMOSTAT COVER	(1)

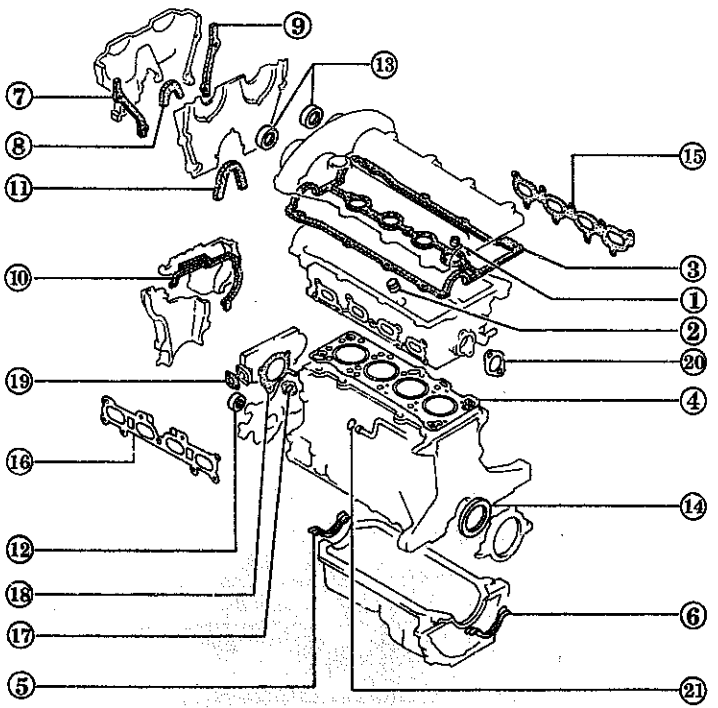

AUNA05



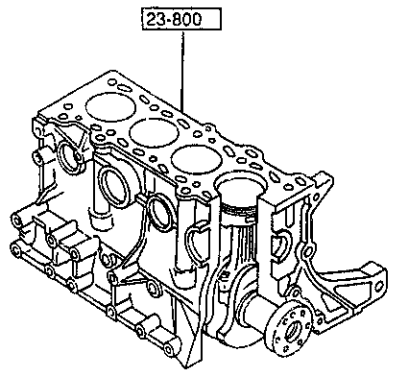

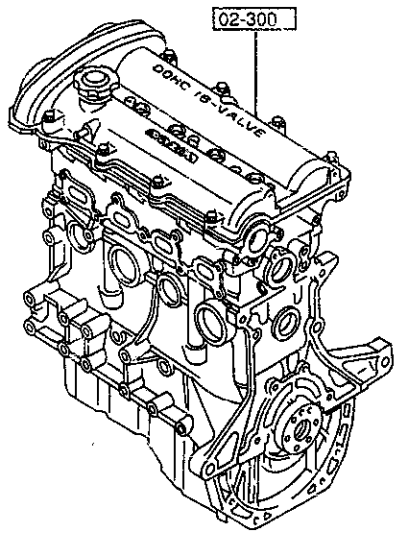

1000 -1 * ENGINE & GASKET SETS

PART NO.	QTY	MODEL/RESTRICTION	MODEL/RESTRICTION	MODEL/RESTRICTION	FROM-TO
02-300		ENGINE,PARTIAL			
BPE8-02-300	1	('95 MODEL)			
BPS1-02-300	1	('96 MODEL)			
02-310S		GASKET SET,PARTIAL ENGINE			
*8ABA-02-310	1				
10-235S		GASKET SET,CYL. HEAD			
8AN2-10-235 A (8AN2-10-235A)	1				-5801
*8AN2-10-235A	1				5801-
10-271S		GASKET SET,ENGINE			
8AN2-10-271	1				-4901
8AN2-10-271A A (8AN2-10-271B)	1				4901-5801
8AN2-10-271B	1				5801-
23-800		ENGINE,SHORT			
BPF1-02-200A	1				

4901 NA35* -602618
5801 NA3** -700842

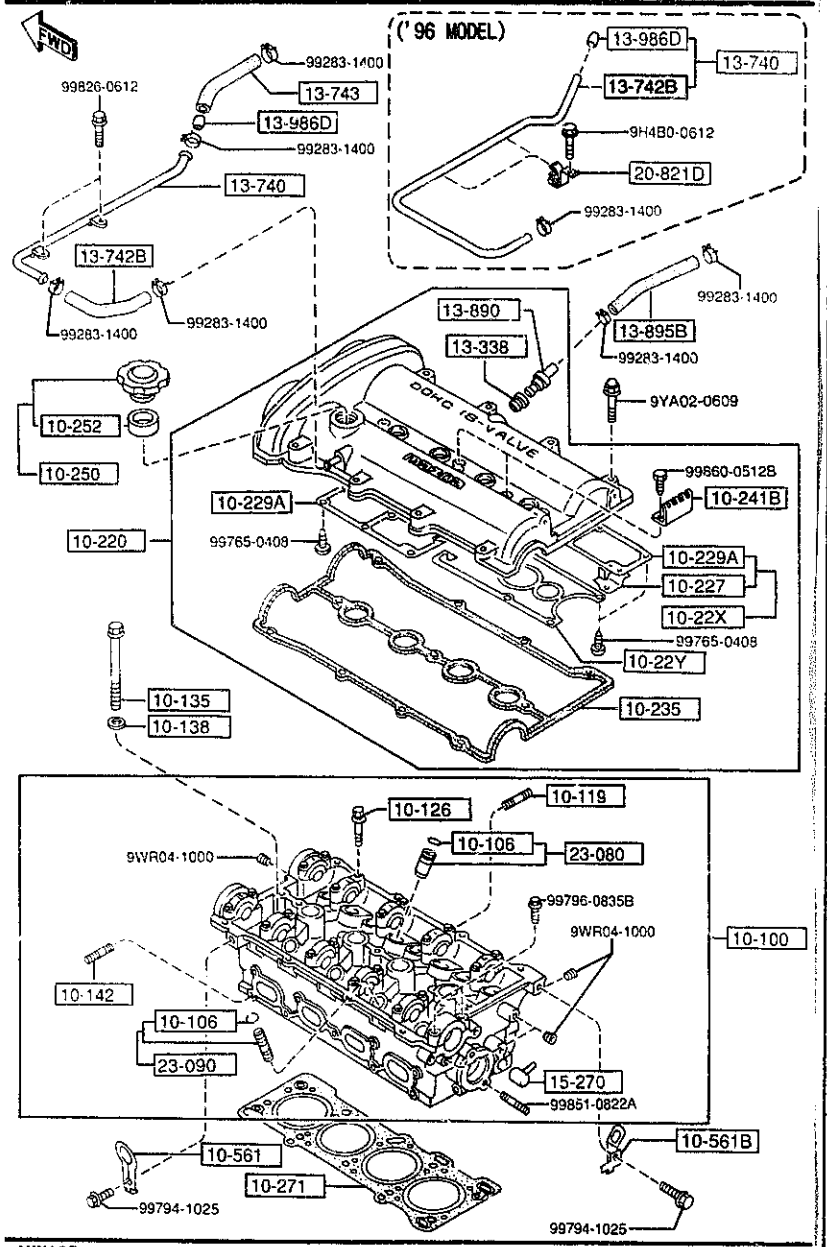

AUNA05

PART NO.	QTY	MODEL/RESTRICTION	MODEL/RESTRICTION	MODEL/RESTRICTION	FROM-TO
10-100		HEAD,CYLINDER			
BPL3-10-100A	1				
10-106		CLIP,VALVE GUIDE			
B660-10-106	16				
10-119		STUD			
FE4J-13-146	9				
10-126		BOLT,CAMSHAFT CAP			
B660-10-126	20				-5601
KL02-10-126	20				5601-
10-135		BOLT,CYLINDER HEAD			
B660-10-135A	10				
10-138		WASHER,PLAIN CYL. HEAD			
B630-10-138A	10				
10-142		STUD,EX. MANIFOLD			
B661-10-104	9				
10-22X		PLATE,OIL BAFFLE-IN. SIDE			
B61P-10-22X	1				
10-22Y		PLATE,OIL BAFFLE-EX.			
B6S7-10-22Y	1				
10-220		COVER,CYLINDER HEAD			
BPE8-10-210A A (BPE8-10-210B)	1				-4B04
BPE8-10-210B AN(BPE8-10-210C)	1				4B04-5801
BPE8-10-210C	1				5801-
10-227		PLATE,BAFFLE			
B61P-10-227	1				
10-229A		PLATE,OIL BAFFLE			
B6S7-10-225	2				

4B04 NA35* -606526
5601 NA3** -700001
5801 NA3** -700842

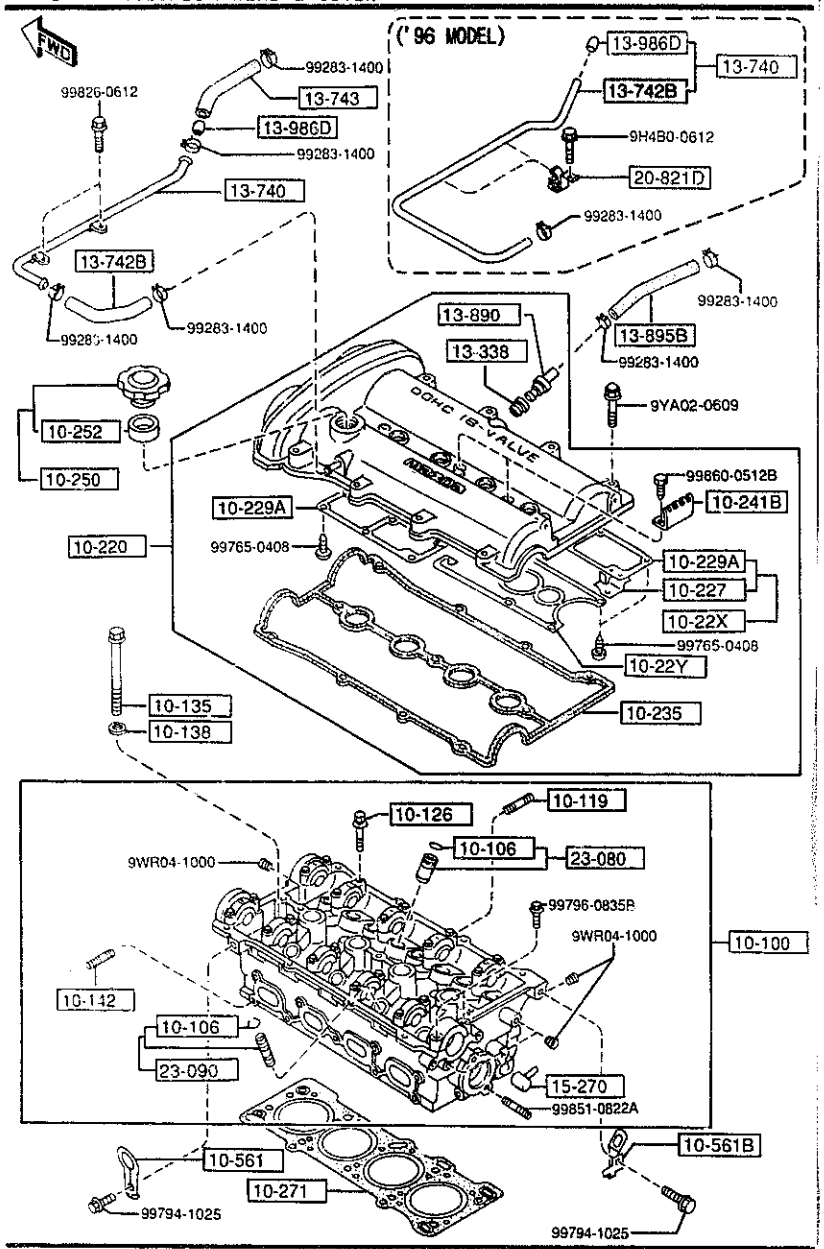

AUNA05

PART NO.	QTY	MODEL/RESTRICTION	MODEL/RESTRICTION	MODEL/RESTRICTION	FROM-TO
10-235		GASKET,HEAD COVER			
BP05-10-235B A (BP05-10-235C)	1				-5801
BP05-10-235C	1				5801-
10-241B		PROTECTOR,HT.CORD-S. TANK			
B660-10-241	2				-4B04
BPE8-10-241	2				4B04-
10-250		CAP,OIL FILLER			
0453-10-250A	1				
10-252		GASKET			
0324-10-252	1				
10-271		GASKET,CYLINDER HEAD			
BP26-10-271	1	NON ASBESTOS			
10-561		HANGER,ENGINE			
B660-10-561	1				
10-561B		HANGER,ENGINE-REAR			
BPE8-10-566A	1				
13-338		SEAL,RUBBER			
E301-13-338A	1				
13-740		HOSE,VENT.-PURGE CON T.V.			
BPE8-13-74X	1	('95 MODEL)			
BPE8-13-740A	1	('96 MODEL)			
13-742B		HOSE,VENTILATION			
*BPE8-13-742	1	('96 MODEL)			
B61P-13-742A	1	('95 MODEL)			
13-743		HOSE,VENTILATION			
BPE8-13-743	1	('95 MODEL)			
13-890		VALVE,P.C.V.			
BP05-13-890	1				

4B04 NA35* -606526
5801 NA3** -700842

CAT. AUNA05-04

1997-07

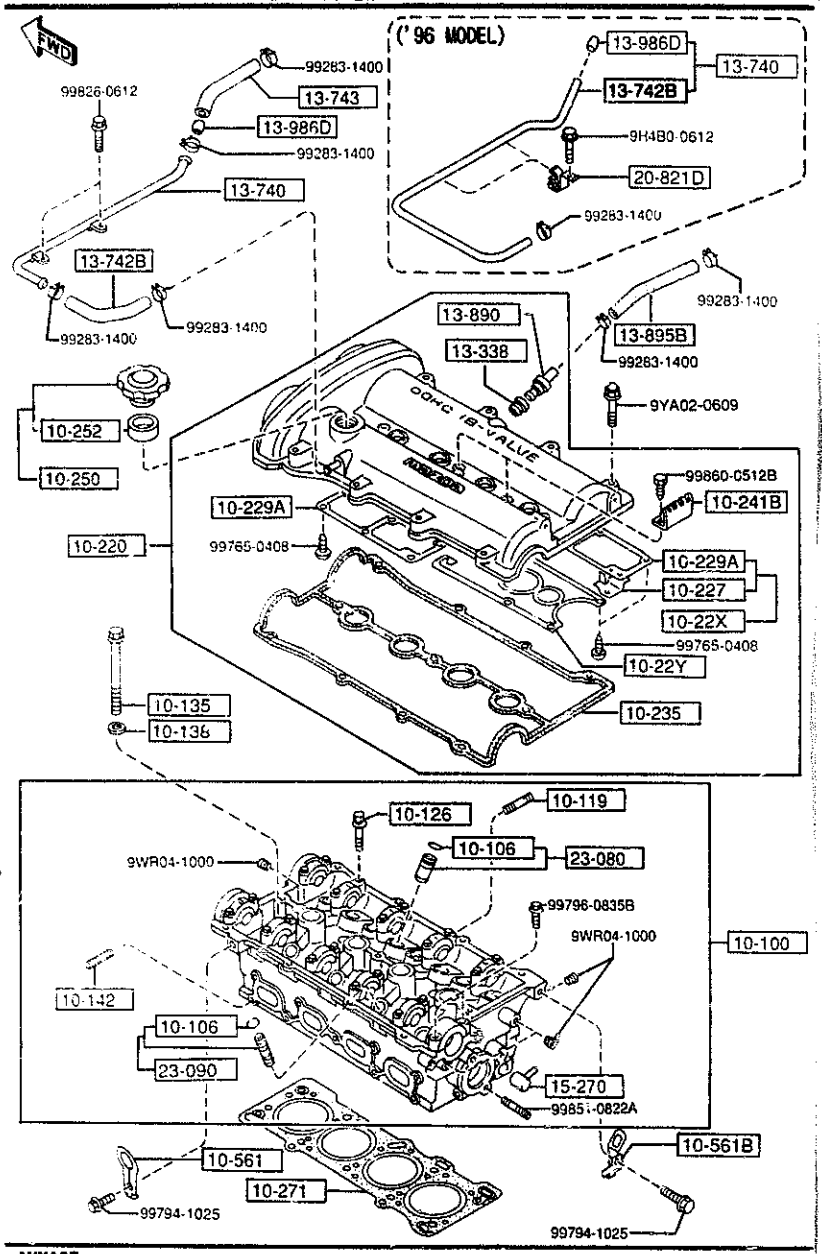

AUNA05

PART NO.	QTY	MODEL/RESTRICTION	MODEL/RESTRICTION	MODEL/RESTRICTION	FROM-TO
13-895B BPE8-13-895	1	HOSE,P.C.V.			
13-986D B61P-13-986	1	ORIFICE			-5A02
15-270 BPE8-15-270	1	PIPE,WATER BY PASS			
20-821D BPE8-20-820	2	CLIP,HOSE ('96 MODEL)			
23-080 B6Z1-10-280	8	GUIDE,VALVE			
23-090 BPY0-10-290	8	GUIDE,VALVE			

5A02 NA3** -703043

CAT. AUNA05-04 1997-07

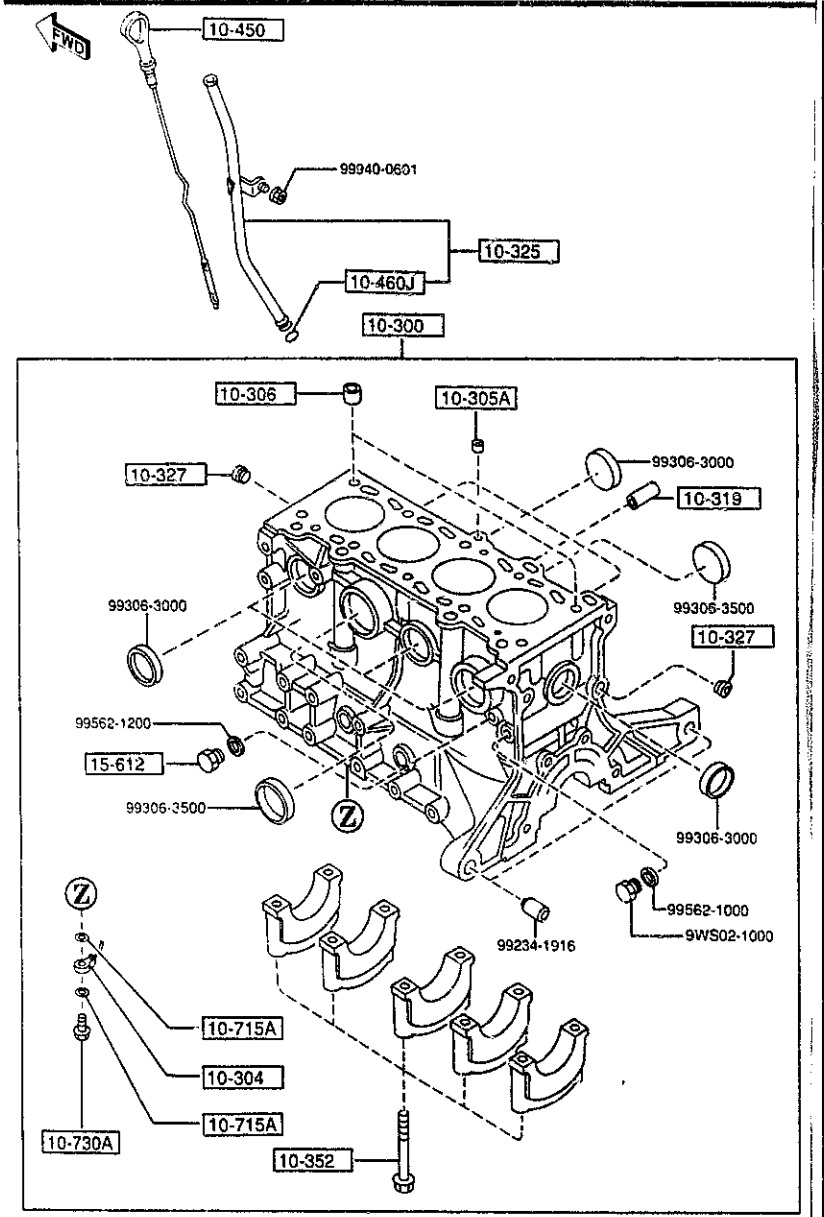

AUNA05

1030 -1 CYLINDER BLOCK

PART NO.	QTY	MODEL/RESTRICTION	MODEL/RESTRICTION	MODEL/RESTRICTION	FROM-TO
10-300		BLOCK,CYLINDER			
BP05-10-300M AN(BP05-10-300N)	1				-5712
BP05-10-300N	1				5712-
10-304		JET,OIL			
BP01-10-580 A (BP01-10-580A)	4				-5501
BP01-10-580A	4				5501-
10-305A		PLUG			
B366-10-305	1				
10-306		PIN,TUBULAR			
B630-10-306	2				
10-319		JOINT			
E586-10-319C	1				
10-325		PIPE,OIL LEVEL GAUGE			
BPE8-10-440	1				
10-327		PLUG,BLIND			
0221-10-327	2				
10-352		BOLT,BEARING CAP			
B630-10-352	10				
10-450		GAUGE,OIL LEVEL			
BPE8-10-450	1				
10-460J		RING,'O'			
99541-00907	1				
10-715A		GASKET,OIL JET			
SE01-10-715	8				-5501
10-730A		VALVE,OIL JET			
SE01-10-730	4				
15-612		PLUG			

5501 NA35* -620210
5712 NA3** -700295

CAT. AUNA05-04

1997-07

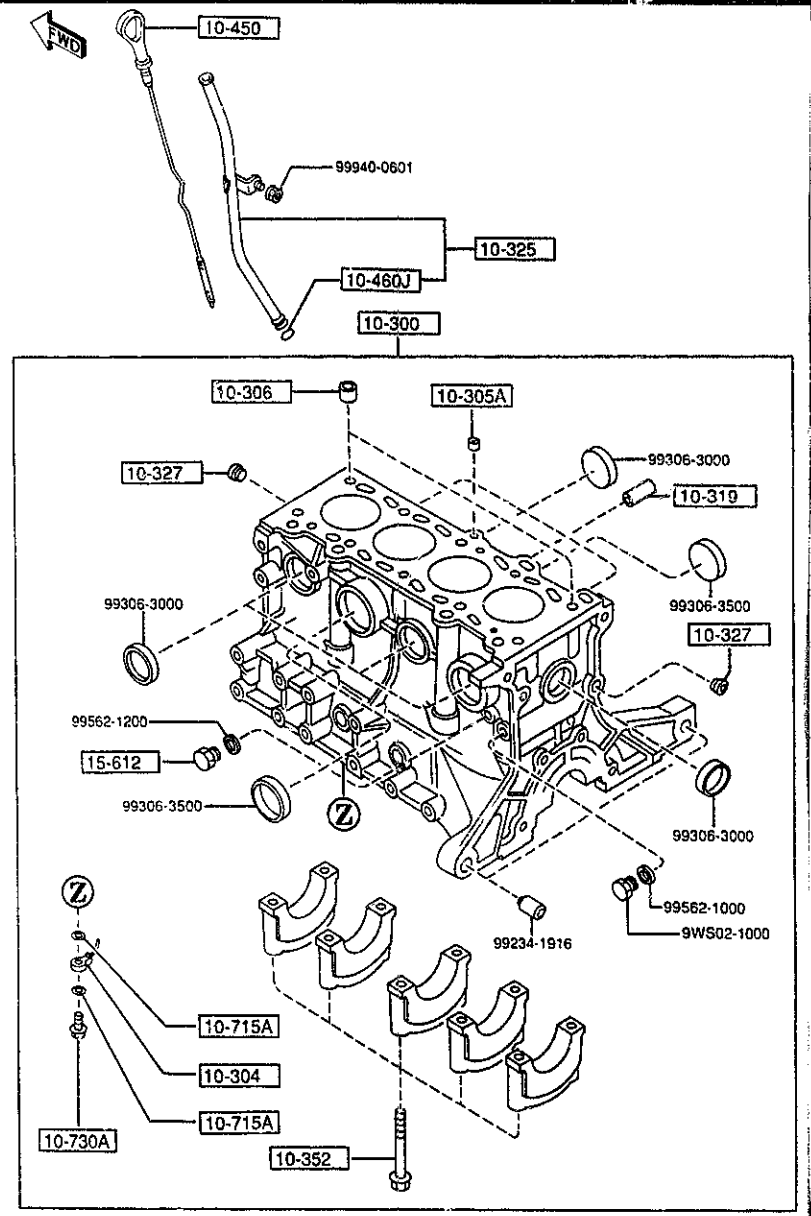

1030 -2 * CYLINDER BLOCK

PART NO.	QTY	MODEL/RESTRICTION	MODEL/RESTRICTION	MODEL/RESTRICTION	FROM-TO
CONT'D					
SE01-15-612	1				-5712

5712 NA3** -700295

1040 OIL PAN & TIMING COVER

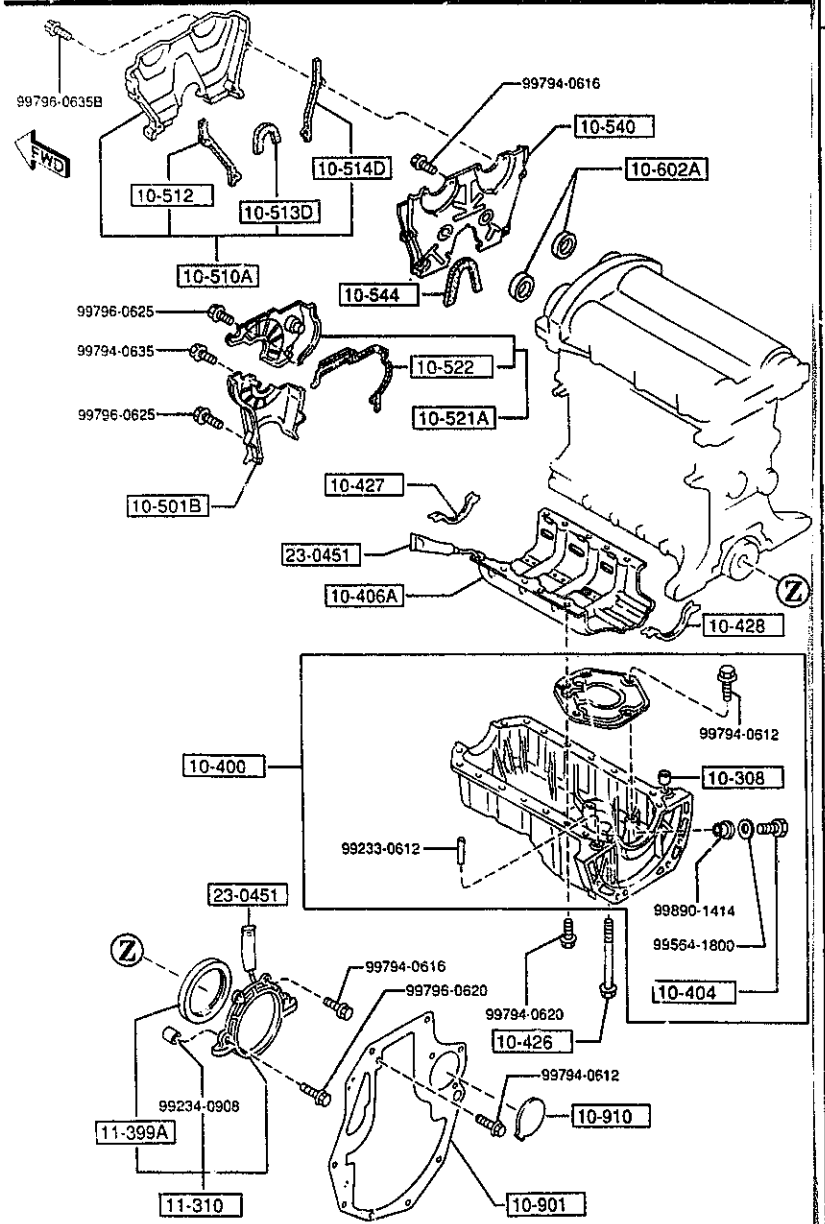

AUNA05

1040 -1 OIL PAN & TIMING COVER

PART NO.	QTY	MODEL/RESTRICTION	MODEL/RESTRICTION	MODEL/RESTRICTION	FROM-TO
10-308		PIN,TUBULAR			
B6F4-10-308	1				
10-400		PAN,OIL			
BPE8-10-400A	1				
10-404		PLUG,DRAIN			
B6S7-10-404A	1				
10-406A		PLATE,OIL BAFFLE-CYL. BLK			
BPE8-10-40Y	1				
10-426		BOLT			
B6S7-10-465	2				
10-427		GASKET,OIL PAN			
B6F4-10-427	1				
10-428		GASKET,OIL PAN			
B6F4-10-428	1				
10-501B		COVER,TIMING BELT-LWR			
B660-10-501E	1				
10-510A		COVER(UP.),TIMING CHAIN			
B61P-10-510	1				
10-512		GASKET(L)			
B61P-10-512	1	NON ASBESTOS			
10-513D		GASKET(INN),TIMING BELT(L)			
B61P-10-513	1	NON ASBESTOS			
10-514D		GASKET(C),TIMING BELT(L)			
B61P-10-514	1	NON ASBESTOS			
10-521A		COVER,TIMING BELT-C.			
B660-10-520B A (B660-10-521B)	1				-4901

4901 NA35* -602618

CAT. AUNA05-04 1997-07

1040 OIL PAN & TIMING COVER

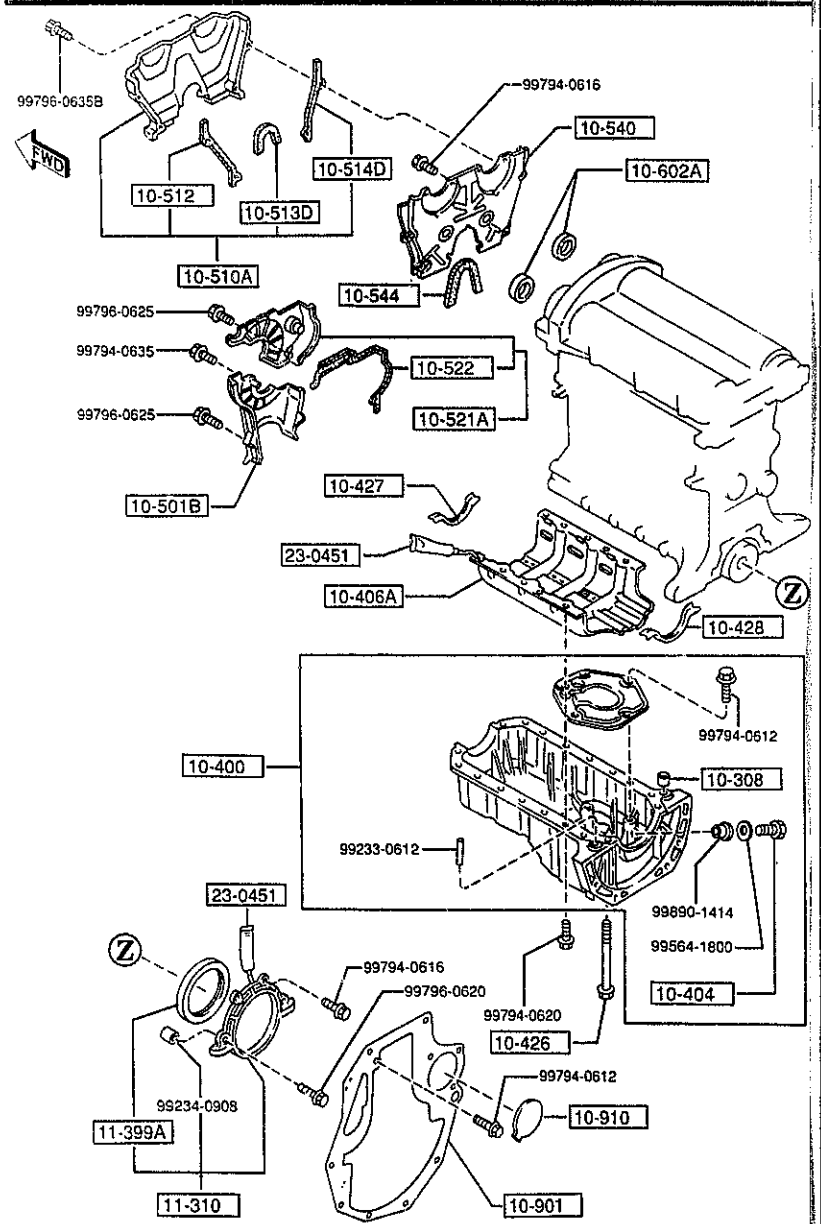

AUNA05

1040 -2 * OIL PAN & TIMING COVER

PART NO.	QTY	MODEL/RESTRICTION	MODEL/RESTRICTION	MODEL/RESTRICTION	FROM-TO
CONT'D					
B660-10-521B	1				4901-
+---------+					
| 10-522 |		GASKET,T.BELT COVER-C.			
+---------+					
B660-10-522	1	NON ASBESTOS			-4901
+---------+					
| 10-540 |		PLATE,SEAL-T.BELT COVER U			
+---------+					
B61P-10-540C	1				
+---------+					
| 10-544 |		RUBBER,SEAL-SEAL PLATE			
+---------+					
B61P-10-544	1				
+---------+					
| 10-602A |		SEAL,OIL			
+---------+					
FS05-10-602A	2				
+---------+					
| 10-901 |		PLATE,END			
+---------+					
B61P-10-901A	1	(MT)			
B64J-10-901	1	(AT)			
+---------+					
| 10-910 |		COVER,END PLATE			
+---------+					
B64J-10-903	1	(AT)			
+---------+					
| 11-310 |		COVER,REAR			
+---------+					
B366-11-310C	1				
+---------+					
| 11-399A |		SEAL,OIL-CRANKSHAFT			
+---------+					
BP05-11-312	1				
+---------+					
| 23-0451 |		TUBE,SILICON			
+---------+					
8527-77-739	1				

4901 NA35* -602618

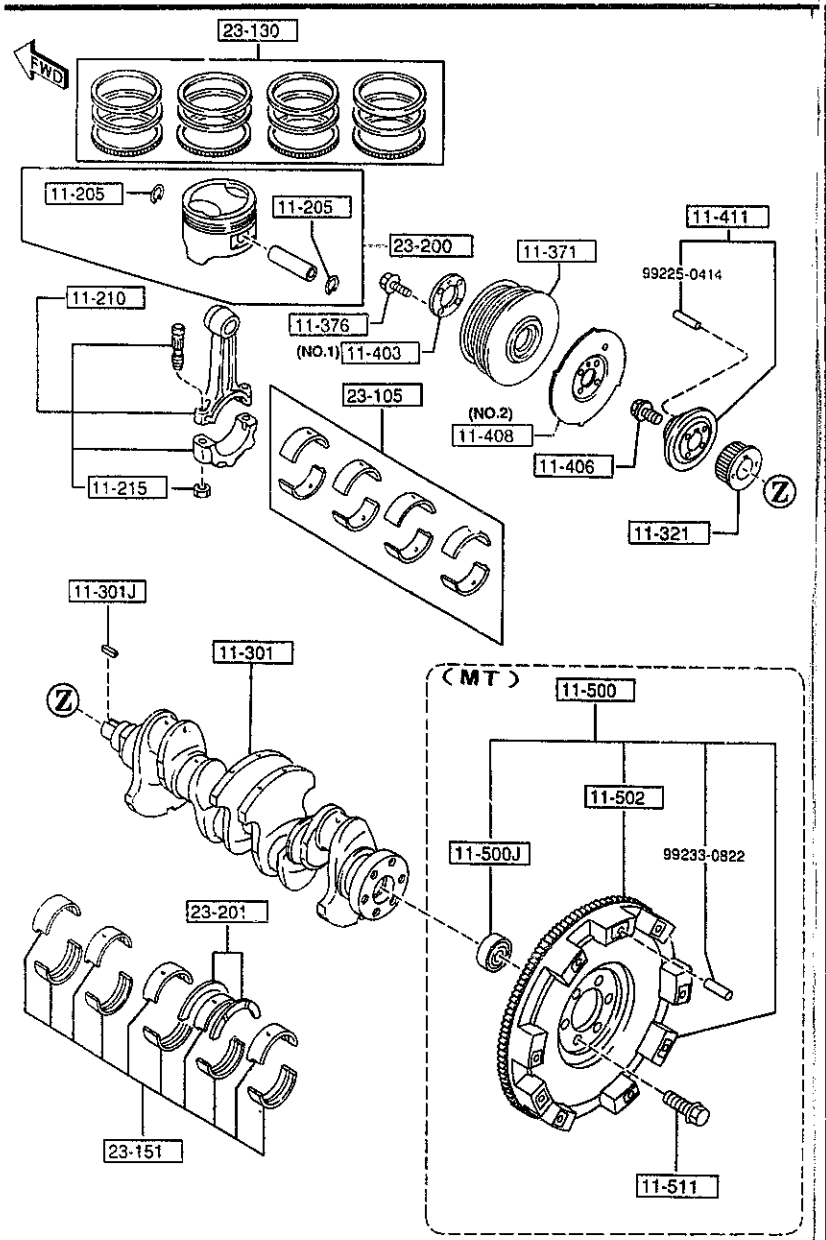

PART NO.	QTY	MODEL/RESTRICTION	MODEL/RESTRICTION	MODEL/RESTRICTION	FROM-TO
11-205		CLIP			
0221-11-205	8				
11-210		ROD,CONNECTING			
B6S7-11-210E	4				
11-215		NUT,CONNECTING ROD			
B6S7-11-215A	8				
11-301		CRANKSHAFT			
BP06-11-300C	1				
11-301J		KEY,WOODRUFF-PULLEY			
B3C7-11-317	1				
11-321		PULLEY,TIMING BELT			
B3C7-11-321	1				
11-371		PULLEY,CRANKSHAFT			
BPD3-11-401A	1				
11-376		BOLT,PULLEY			
JF01-11-405	4				
11-406		BOLT,LOCK-C.SHAFT PU			
B3C7-11-406	1				
11-408		PLATE,CRANKSHAFT PUL LEY			
B3C7-11-408	1	(ILLUST. NO.1)			
B6BF-11-408B	1	(ILLUST. NO.2) ('96 MODEL)			
11-411		BOSS,PULLEY			
B3C7-11-400	1	('95 MODEL)			
B6BF-11-400A	1	('96 MODEL)			
11-500		WHEEL,FLY			
BPR7-11-500	1	(MT)			
11-500J		BEARING,BALL-FLY WHE EL			
F801-11-303	1	(MT)			

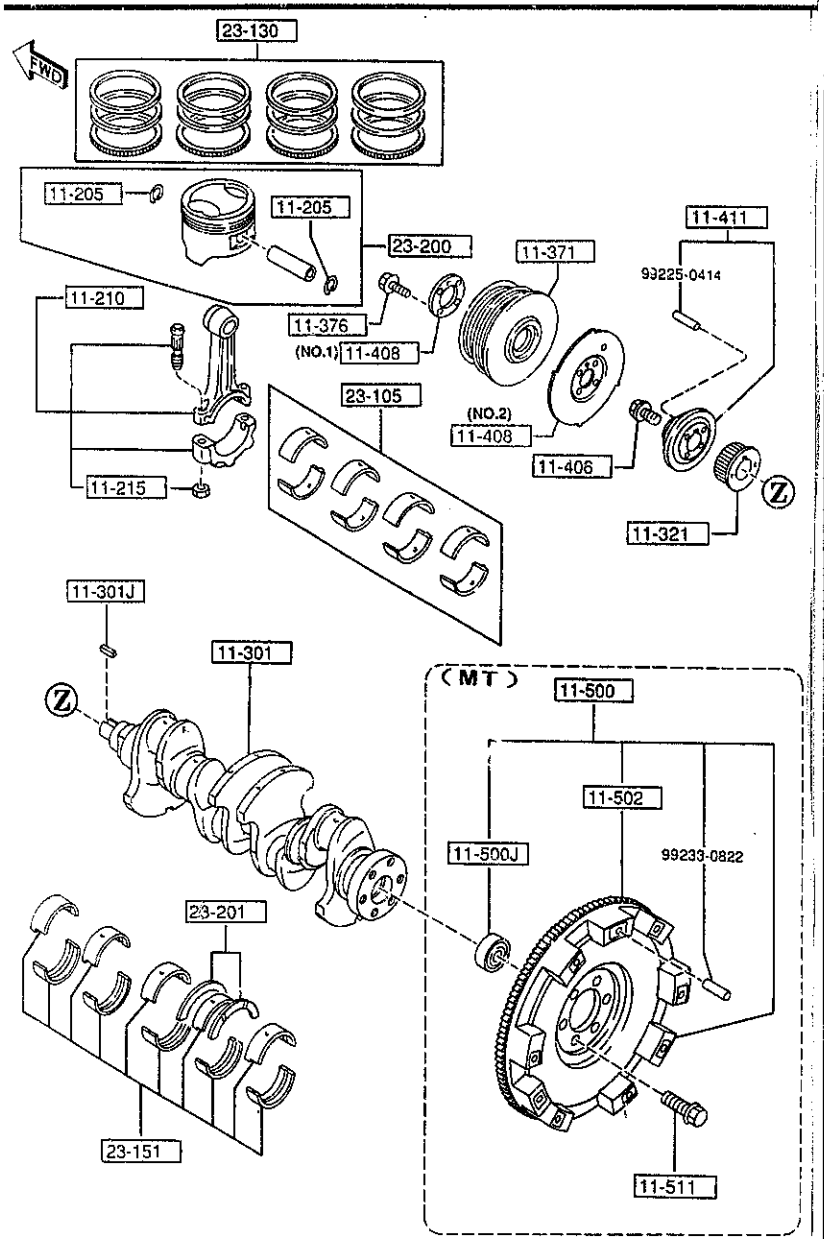

PART NO.	QTY	MODEL/RESTRICTION	MODEL/RESTRICTION	MODEL/RESTRICTION	FROM-TO
11-502		GEAR,RING-FLY WHEEL			
B367-11-502	1	YOSHIWA (MT)			
0110-11-502	1	KANDA (MT)			4C01-
11-511		BOLT,LOCK-FLYWHEEL			
F201-11-511A	6	(MT)			
23-105		METAL SET,CONN.ROD			
B6Y2-11-SE0 A (B6Y2-11-SE0A)	1	STD			-5601
B6Y2-11-SFX A (B6Y2-11-SFXA)	1	O.S. 0.50			-5601
B6Y2-11-SFY A (B6Y2-11-SFYA)	1	O.S. 0.75			-5601
B6Y2-11-SF0 A (B6Y2-11-SF0A)	1	O.S. 0.25			-5601
B6Y2-11-SE0A	1	STD.			5601-
B6Y2-11-SFXA	1	O.S. 0.50			5601-
B6Y2-11-SFYA	1	O.S. 0.75			5601-
B6Y2-11-SF0A	1	O.S. 0.25			5601-
23-130		RING SET,PISTON			
BPY1-11-SC0	1	STD.			
BPY1-11-SDX	1	O.S. 0.50			
BPY1-11-SD0	1	O.S. 0.25			
23-151		METAL SET,MAIN BRG.			
B6Y2-11-SG0	1	STD.			
B6Y1-11-SHX	1	O.S. 0.50			
B6Y1-11-SHY	1	O.S. 0.75			
B6Y1-11-SH0	1	O.S. 0.25			

4C01 NA35* -609691
5601 NA3** -700001

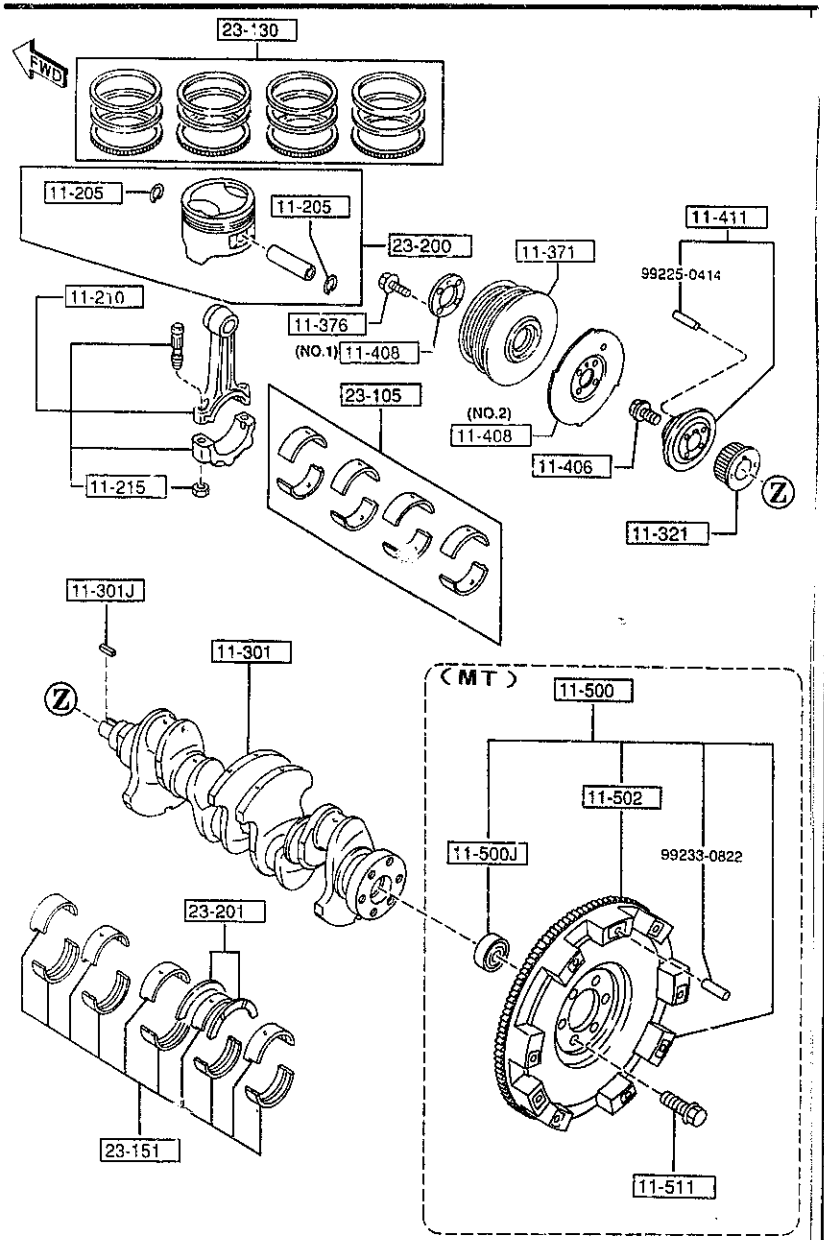

PART NO.	QTY	MODEL/RESTRICTION	MODEL/RESTRICTION	MODEL/RESTRICTION	FROM-TO
23-200		PISTON SET			
BPY1-11-SA0A	4	STD.			
BPY1-11-SBXA	4	O.S. 0.50			
BPY1-11-SB0A	4	O.S. 0.25			
23-201		METAL SET,THRUST			
B6Y1-11-SJ0	1	STD.			
B6Y1-11-SKX	1	O.S. 0.50			
B6Y1-11-SKY	1	O.S. 0.75			
B6Y1-11-SK0	1	O.S. 0.25			

1200 VALVE SYSTEM

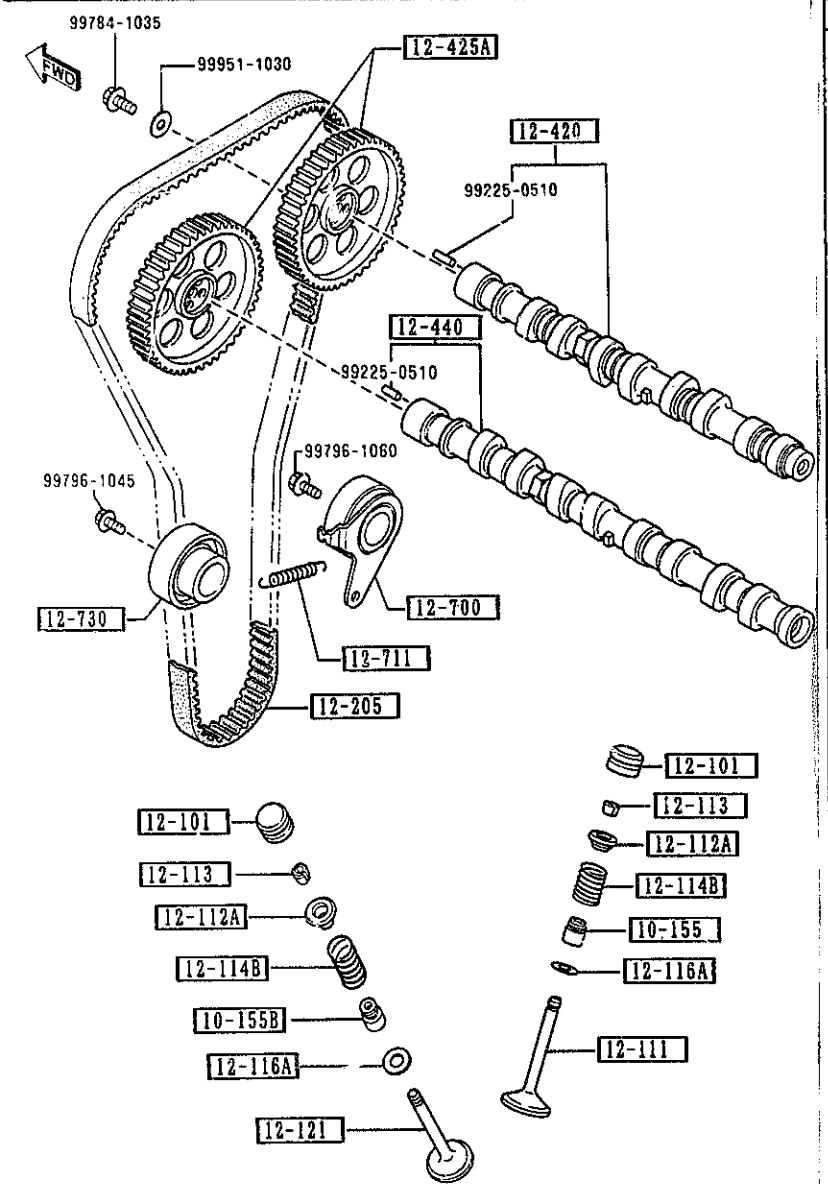

AUNA05

1200 -1 VALVE SYSTEM

PART NO.	QTY	MODEL/RESTRICTION	MODEL/RESTRICTION	MODEL/RESTRICTION	FROM-TO
10-155		SEAL,VALVE			
KL01-10-155	8	NOK			
10-155B		SEAL,VALVE			
KL02-10-155	8	NOK			
12-101		ADJUSTER,HYDRAULIC L ASH			
KL01-12-101B	16	NITTAN VALVE			
12-111		VALVE,INLET			
BP05-12-111	8	NITTAN VALVE			-5901
BP06-12-111 A (BP05-12-111)	8	FUJI VALVE			-5A01
BP1B-12-111	8	NITTAN VALVE			5901-
BP06-12-111A	8	FUJI VALVE			5A01-
12-112A		SEAT,VALVE SPG-UP.			
BP05-12-113	16				-5606
B6BF-12-113	16				5606-
12-113		COTTER,VALVE-IN.			
FE3N-12-114	32				-5606
FS01-12-114	32				5606-
12-114B		SPRING,VALVE			
BP05-12-125	16				
12-116A		SEAT,VALVE SPG.-LWR			
B660-12-123A	16				
12-121		VALVE,EXHAUST			
BP05-12-121A	8				
12-205		BELT,TIMING			
B6S7-12-205C AN(B6S7-12-205D)	1	UNITTA			-5C01
B6S7-12-205D		UNITTA			

5606 NA3** -700001
5901 NA3** -702989
5A01 NA3** -703035
5C01 NA3** -706448

CAT. AUNA05-04

1997-07

1200 VALVE SYSTEM

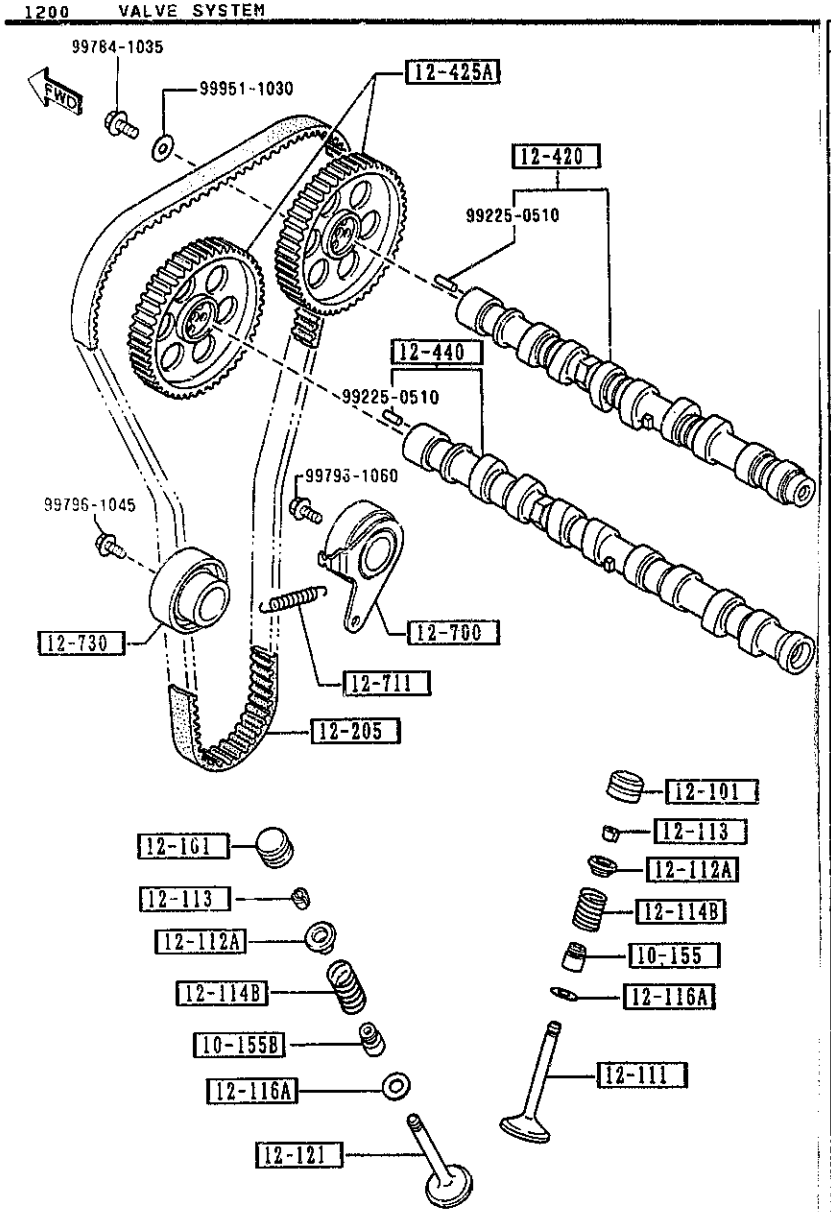

AUNA05

PART NO.	QTY	MODEL/RESTRICTION	MODEL/RESTRICTION	MODEL/RESTRICTION	FROM-TO
CONT'D	1				5C01-
12-420		CAMSHAFT			
BP05-12-420E	1				
12-425A		PULLEY,CAMSHAFT			
B6S7-12-425A	2				
12-440		CAMSHAFT,EXHAUST			
BP06-12-440C	1				
12-700		TENSIONER,TIMING BELT			
B660-12-700E	1				
12-711		SPRING,TENSIONER			
B660-12-711C	1				
12-730		IDLER,TIMING BELT			
B660-12-730C	1				

5C01 NA3** -706448

CAT. AUNA05-04

1997-07

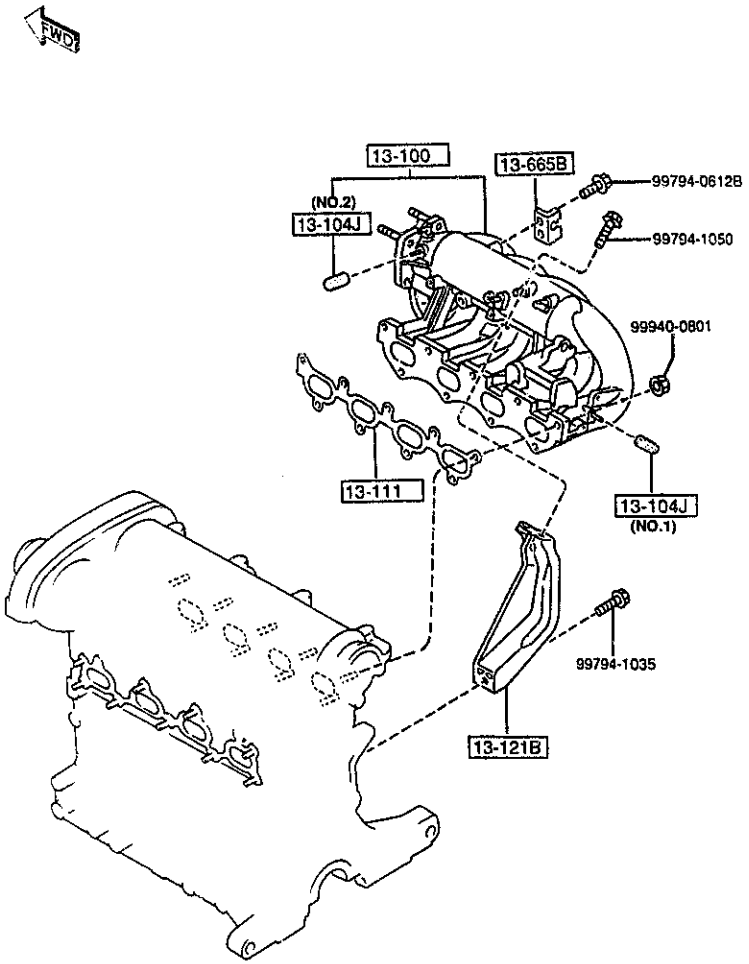

1300 -1 * INLET MANIFOLD

PART NO.	QTY	MODEL/RESTRICTION	MODEL/RESTRICTION	MODEL/RESTRICTION	FROM-TO
13-100		MANIFOLD,INLET			
BPE8-13-100C	1				-5201
BPE8-13-100D	1				5201-
13-104J		CAP,BLIND			
F8L7-13-104	1	(ILLUST. NO.1) (MT)			
1010-13-104	1	(ILLUST. NO.2)			
13-111		GASKET,IN.MANIFOLD			
BP05-13-111	1	NON ASBESTOS			
13-121B		STAY,MANIFOLD			
BPE8-13-121	1				
13-665B		BRACKET,ACCEL WIRE			
BPR5-13-665	1				

5201 NA35* -614193

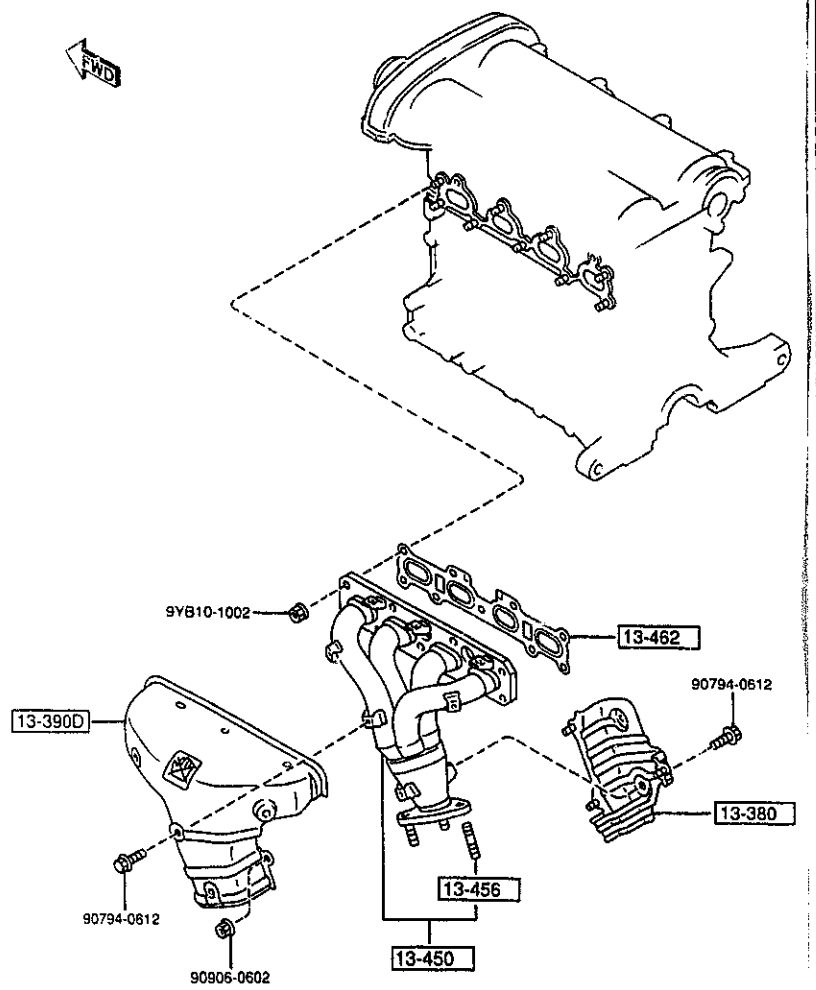

AUNA05

1310 -1 * EXHAUST MANIFOLD

PART NO.	QTY	MODEL/RESTRICTION	MODEL/RESTRICTION	MODEL/RESTRICTION	FROM-TO
13-380		INSULATOR,HEAT			
BPE8-13-380A	1				
13-390D		INSULATOR,EX.MANIFOLD			
BPE8-13-390	1				
13-450		MANIFOLD,EXHAUST			
BPE8-13-450	1				
13-456		STUD			
2306-13-456	3				
13-462		GASKET,EX.MANIFOLD			
BP05-13-460	1	NON ASBESTOS			

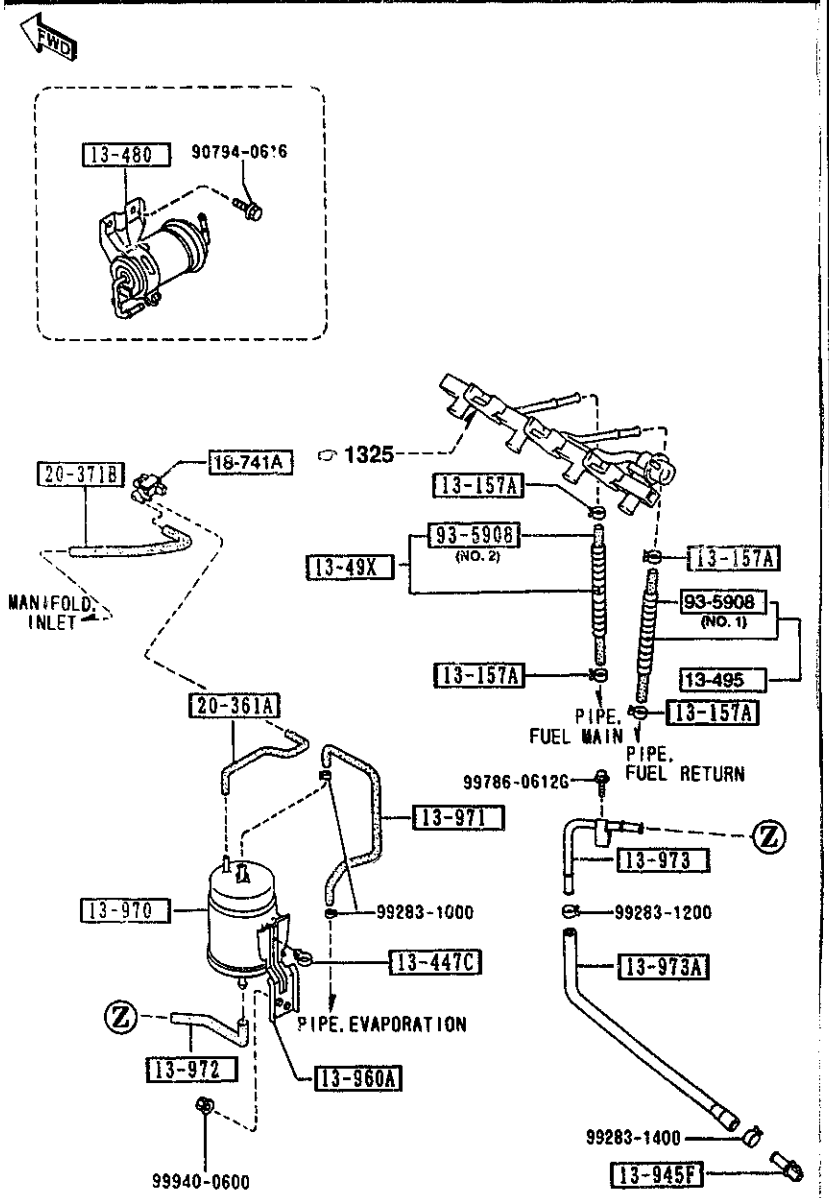

AUNA05

PART NO.	QTY	MODEL/RESTRICTION	MODEL/RESTRICTION	MODEL/RESTRICTION	FROM-TO
13-157A 8574-13-157	4	CLIP			
13-447C B61P-13-447	1	CLAMP,HOSE			
13-480 B61P-20-490	1	FILTER,FUEL			
13-49X BPE8-13-49X	1	HOSE,FUEL-EGI			
13-495 BPE8-13-495	1	HOSE,FUEL			
13-945F JE16-13-298	1	CONNECTOR			
13-960A B61P-13-960	1	BRACKET,CANISTER			
13-970 JE16-13-970A	1	CANISTER			
13-971 B6CA-13-971	1	HOSE,VENTILATION			
13-972 B6CA-13-972	1	HOSE,EVAPORATION			
13-973 B61P-13-97YA	1	HOSE,DRAIN			
13-973A B61P-13-973A	1	HOSE,EVAPORATION			
18-741A JE16-18-741	1	VALVE,THREE WAY NIHON OIL SEAL			
20-361A		TUBE,VACUUM			

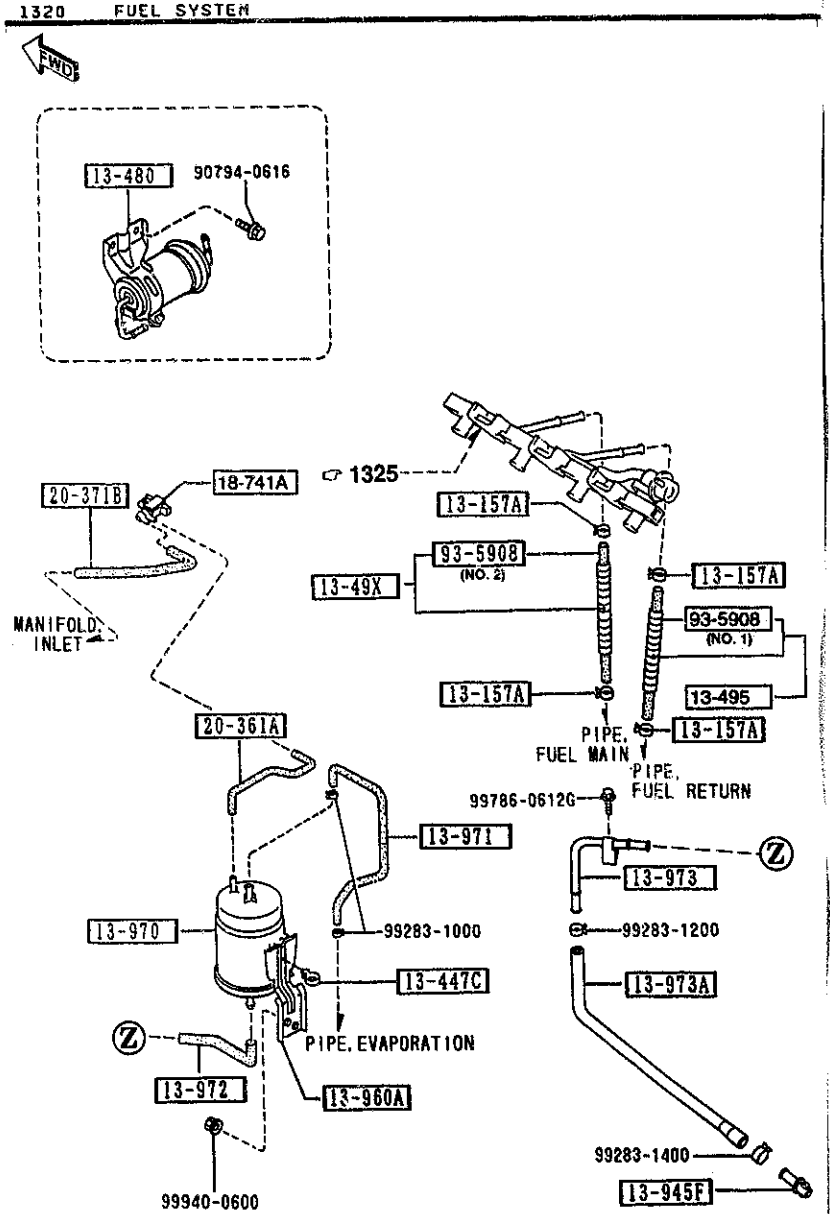

AUNA05

PART NO.	QTY	MODEL/RESTRICTION	MODEL/RESTRICTION	MODEL/RESTRICTION	FROM-TO
CONT'D					
B61P-20-361	1				
20-371B		TUBE,VACUUM			
BPE8-20-371	1				
93-5908		HOSE			
*99359-0830M	1	(ILLUST. NO.1)			
99359-0834	1	(ILLUST. NO.2)			

CAT. AUNA05-04

1997-07

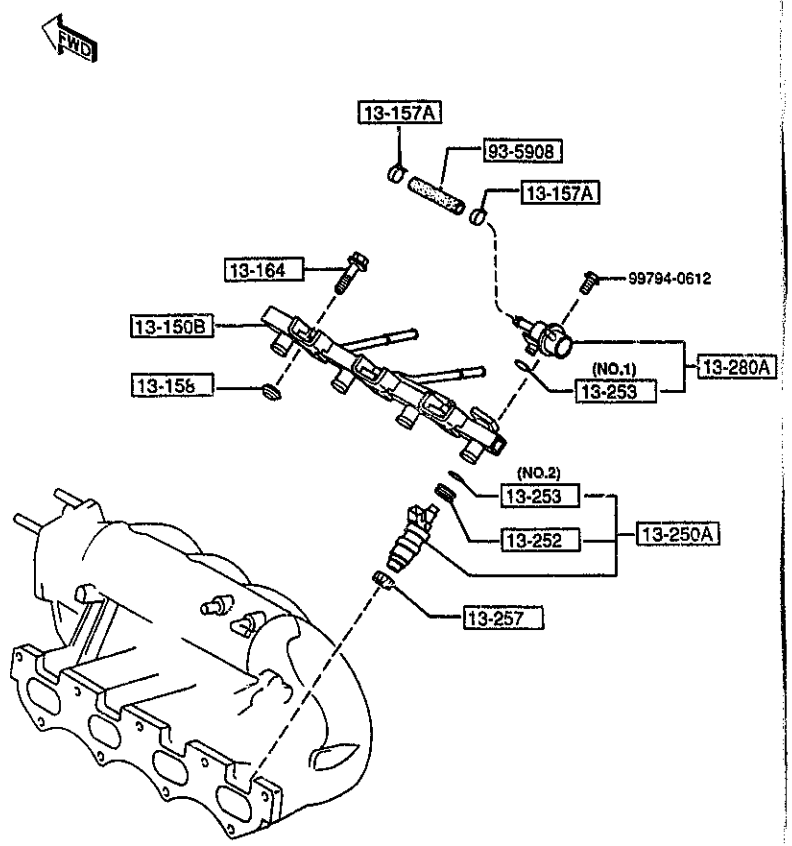

1325 -1 * FUEL DISTRIBUTOR

PART NO.	QTY	MODEL/RESTRICTION	MODEL/RESTRICTION	MODEL/RESTRICTION	FROM-TO
13-150B BPE8-13-150	1	DISTRIBUTOR,FUEL			
13-157A 8574-13-157	2	CLIP			
13-158 B675-13-158	3	INSULATOR,FUEL DIST.			
13-164 F8B3-13-164	3	BOLT,FUEL DISTRIBUTOR			
13-250A BP06-13-250	4	INJECTION,FUEL-M.P.ELECT.			
13-252 8574-13-252	4	GROMMET			
13-253 G601-13-253	1	RING,'O' (ILLUST. NO.1)			
8574-13-253	4	(ILLUST. NO.2)			
13-257 JE06-13-257	4	INSULATOR,INJECTION			
13-280A KJ01-13-280	1	PRESSURE RG.,FUEL			
93-5906 99359-0809	1	HOSE			

1330 AIR CLEANER

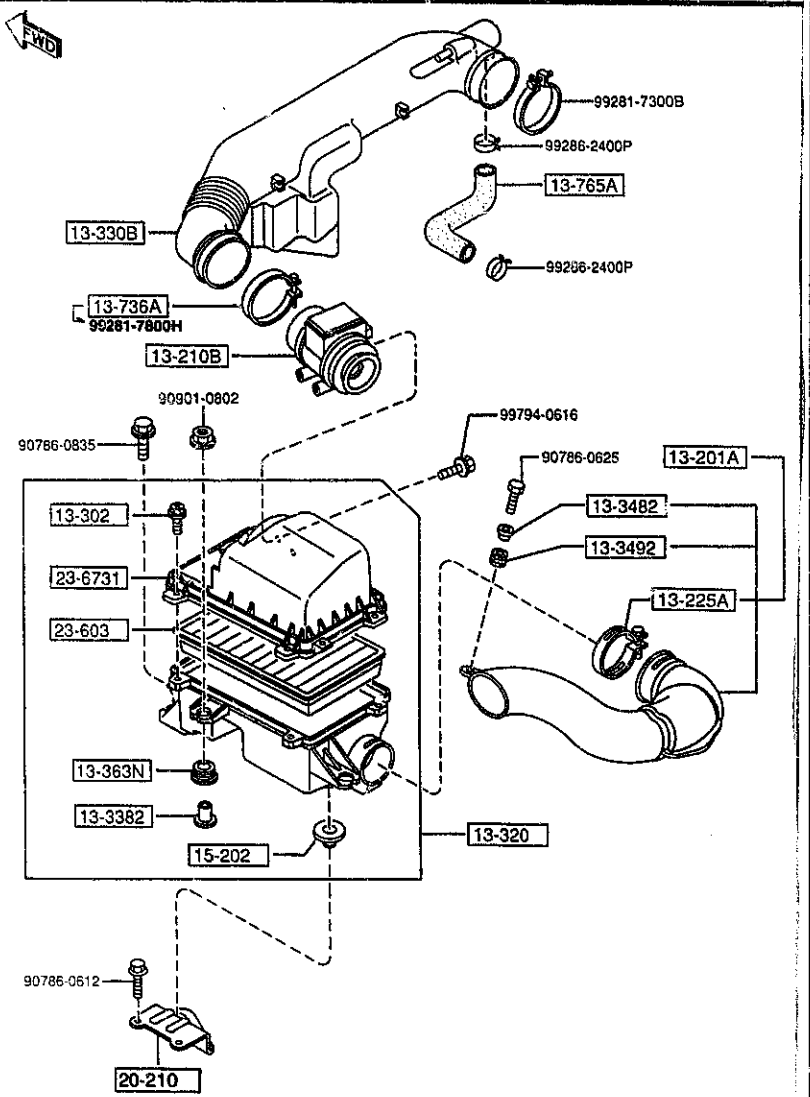

AUNA05

1330 -1 AIR CLEANER

PART NO.	QTY	MODEL/RESTRICTION	MODEL/RESTRICTION	MODEL/RESTRICTION	FROM-TO
13-201A BPE8-13-200	1	DUCT,FRESH AIR			
13-210B B6BF-13-215	1	SENSOR,AIR FLOW			
13-225A B61P-13-735	1	CLAMP,HOSE			
13-302 F201-13-302A	4	BOLT,AIR CLEANER			
13-320 BPE8-13-320	1	CLEANER,AIR			
13-330B BPE8-13-331A A (BPE8-13-331B)	1	PIPE,AIR INTAKE			-6118
*BPE8-13-331B	1				6118-
13-3382 FE51-13-329	3	SPACER			
13-3482 SLA1-13-321	1	SPACER,AIR INT.PIPE			
13-3492 S501-13-349	1	INSULATOR			
13-363N FE51-13-363	3	RUBBER,MOUNTING			
13-736A KL01-13-735	1	CLAMP,HOSE-A.I.P./A. CLNR			-5201
13-765A BPE8-13-765A	1	HOSE,AIR			
15-202 B61P-13-Z66	1	RUBBER,MOUNT			

5201 NA35* -616193
6118 NA3** -709942

CAT. AUNA05-04

1997-07

1330 AIR CLEANER

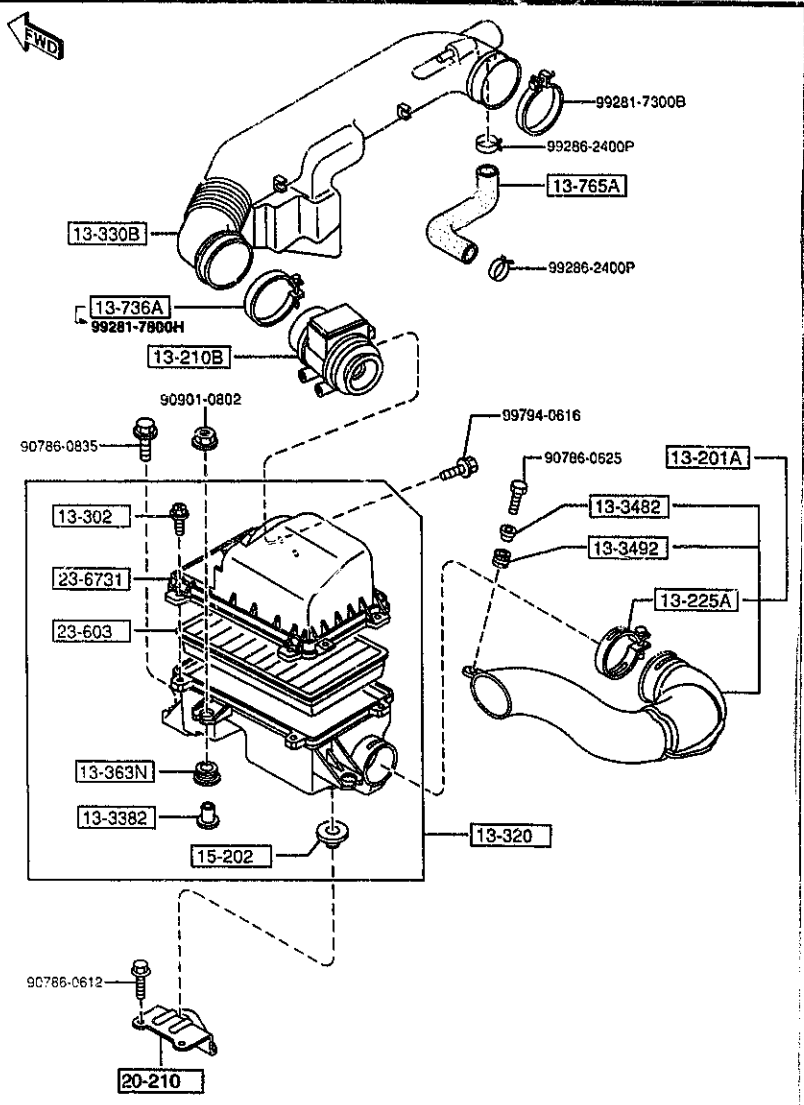

1330 -2 * AIR CLEANER

PART NO.	QTY	MODEL/RESTRICTION	MODEL/RESTRICTION	MODEL/RESTRICTION	FROM-TO
20-210		BRACKET,AIR CLEANER			
B61P-20-211	1				
23-603		ELEMENT,AIR CLEANER			
B6S7-13-Z40	1				
23-6731		COVER,AIR CLEANER			
BPE8-13-Z01	1				

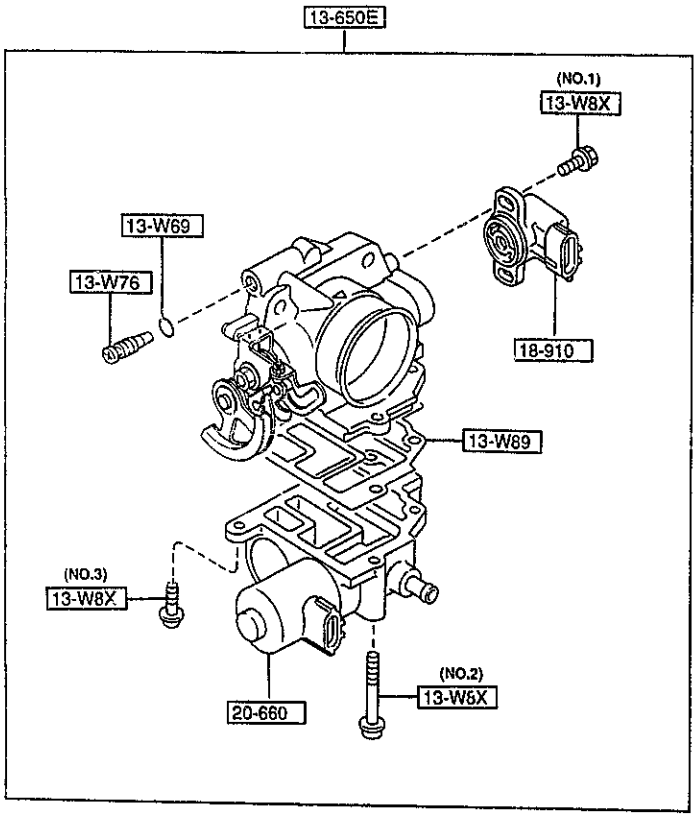

1364 -1 * THROTTLE BODY

PART NO.	QTY	MODEL/RESTRICTION	MODEL/RESTRICTION	MODEL/RESTRICTION	FROM-TO
13-W69		RING,'O'			
K801-13-W69	1				
13-W76		SCREW,ID.ADJUST-TH. BODY			
K801-13-W76	1				
13-W8X		SCREW & WASHER SET			
B551-13-W8X	2	(ILLUST. NO.1)			
B6BF-13-W8X	2	(ILLUST. NO.2)			
K802-13-W8X	2	(ILLUST. NO.3)			
13-W89		GASKET,THERMO			
B6BF-13-W89	1				
13-650E		BODY,THROTTLE			
BPR5-13-640	1				
18-910		SENSOR,THROTTLE-CARB.			
JE50-18-911	1				
20-660		VALVE,IDLE AIR CONTROL			
B6BF-20-660	1				

1370 EMISSION CONTROL SYSTEM (INLET SIDE)

('96 MODEL)

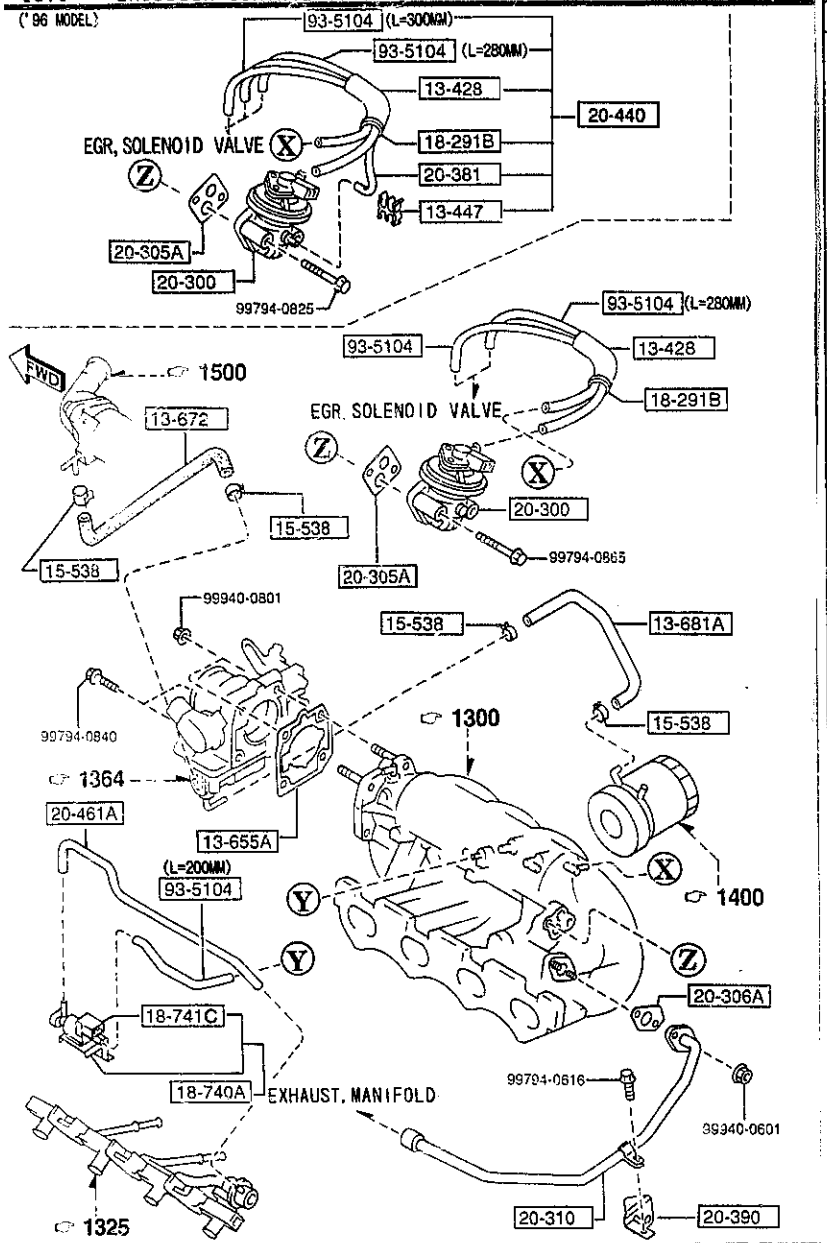

AUNA05

1370 -1 EMISSION CONTROL SYSTEM (INLET SIDE)

PART NO.	QTY	MODEL/RESTRICTION	MODEL/RESTRICTION	MODEL/RESTRICTION	FROM-TO
13-428		PROTECTOR			
BPS1-13-428A	1	('96 MODEL)			
B367-13-428	1	('95 MODEL)			
13-447		CLIP			
F801-13-447	1	('96 MODEL)			
13-655A		GASKET			
B6BF-13-655	1				
13-672		HOSE,WATER			
BPE8-13-682	1				
13-681A		HOSE,WATER			
BPE8-13-681	1				
15-538		CLAMP,WATER HOSE			
JF02-15-538	4				-5C01
B6BF-15-538	4				5C01-
18-291B		CLAMP,HOSE			
HE21-18-291	1				
18-740A		VALVE,SOLENOID			
B69N-18-740	1				
18-741C		VALVE,SOLENOID			
FS05-18-741	1				
20-300		VALVE,E.G.R.			
Z505-20-300	1				-5801
B6BF-20-300	1				5801-
20-305A		GASKET,E.G.R. VALVE			
JE27-20-305 A (JE27-20-305A)	1				-5907
JE27-20-305A	1				5907-
20-306A		GASKET			
JE06-20-306	1				

5801 NA3** -700842
5907 NA3** -703015
5C01 NA3** -706448

CAT. AUNA05-04

1997-07

1370 EMISSION CONTROL SYSTEM (INLET SIDE)

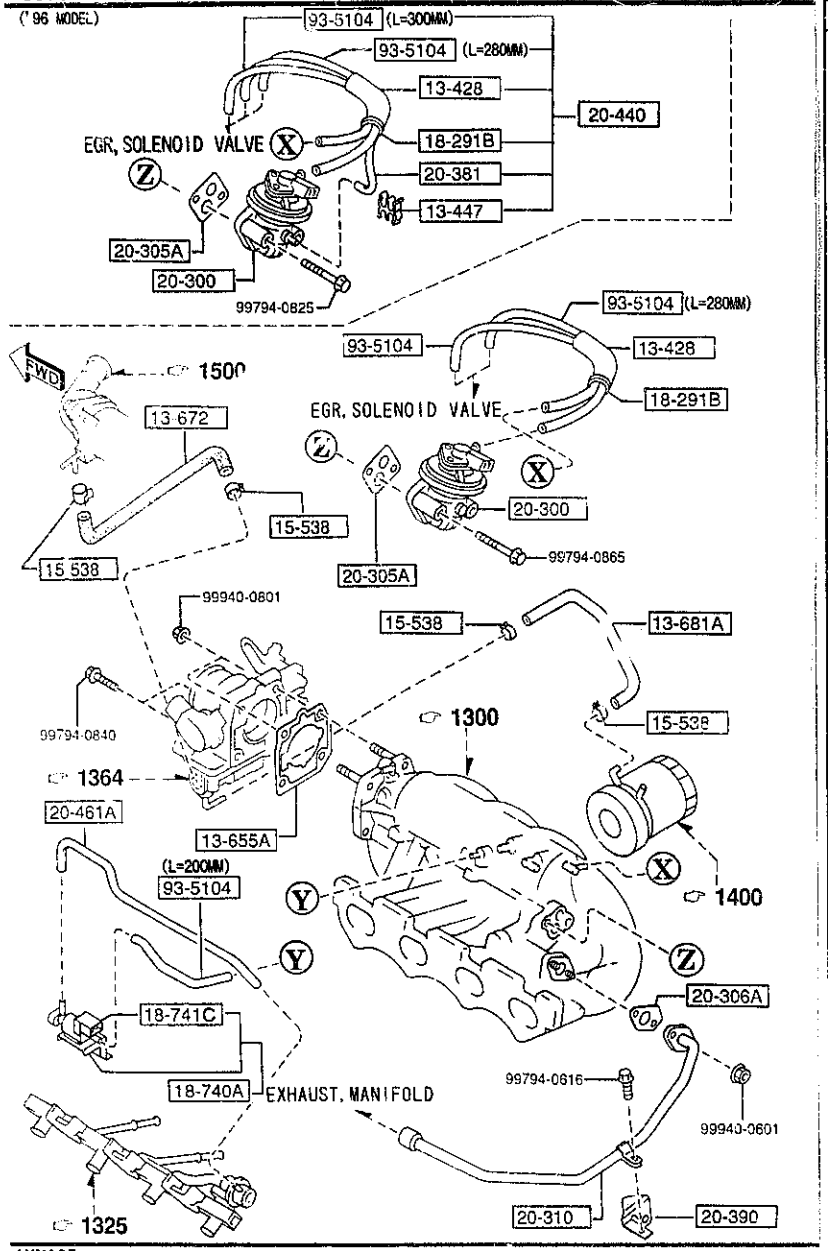

AUNA05

1370 -2 * EMISSION CONTROL SYSTEM (INLET SIDE)

PART NO	QTY	MODEL/RESTRICTION	MODEL/RESTRICTION	MODEL/RESTRICTION	ROW-TO
20-310		PIPE,E.G.R.			
BPE8-20-310	1				
20-381		TUBE,VACUUM			
BPS1-20-381	1	('96 MODEL)			
20-390		BRACKET,E.G.R.PIPE			
BPE8-20-390	1				
20-440		TUBE,VACUUM			
*BPS1-20-440A	1				
20-461A		TUBE,VACUUM			
BPE8-20-461	1				
93-5104		HOSE			
99351-04999	1	L=1M CUT IT TO USE			

CAT. AUNA05-04

1997-07

1400 OIL PUMP & FILTER

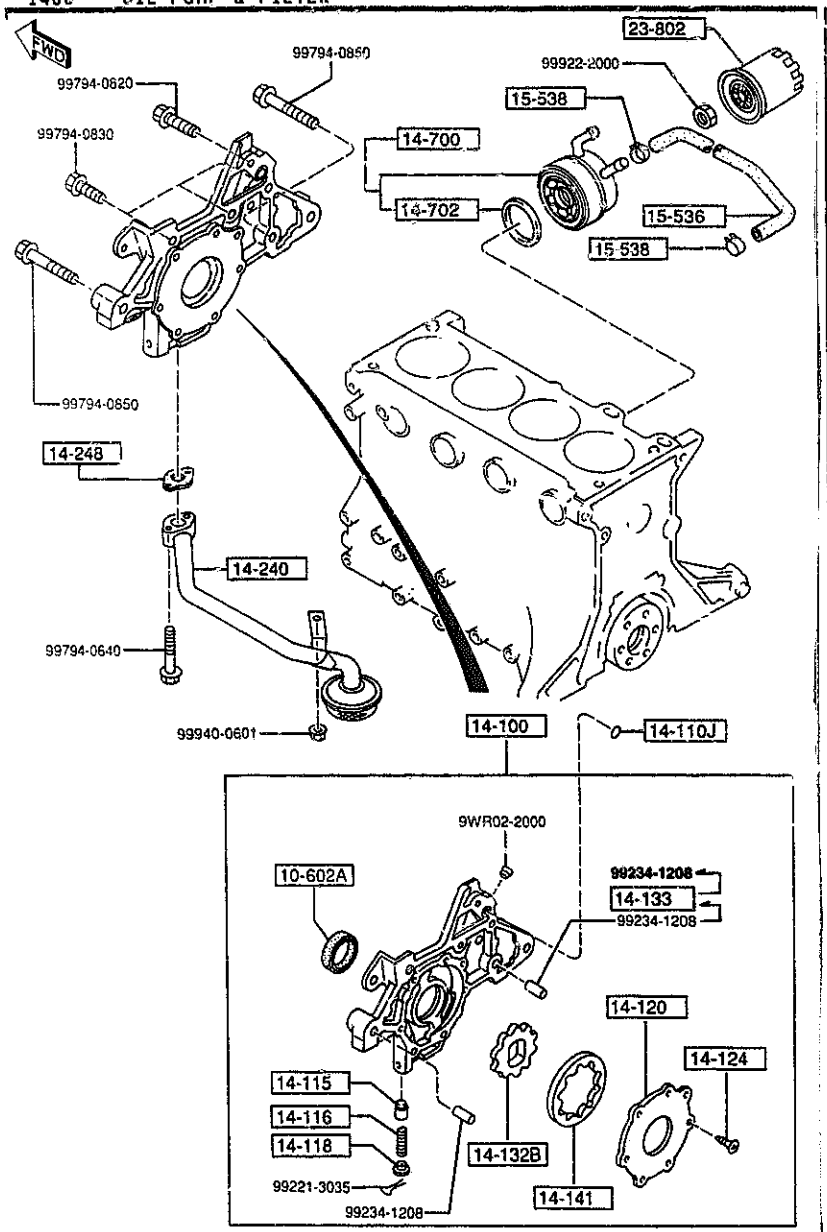

AUNA05

1400 -1 OIL PUMP & FILTER

PART NO.	QTY	MODEL/RESTRICTION	MODEL/RESTRICTION	MODEL/RESTRICTION	FROM-TO
10-602A		SEAL,OIL			
B3C7-10-602A	1	NON ASBESTOS			
14-100		PUMP,OIL			
B6S8-14-100G A (B6S8-14-100H)	1				-6305
*B6S8-14-100H	1				6305-
14-110J		RING,'O'			
FE1H-14-122A	1				
14-115		PLUNGER,CONTROL			
JF01-14-115	1				-6305
*FS01-14-115	1				6305-
14-116		SPRING,PRESSURE			
0324-14-116B	1				
14-118		SHEET,SPRING			
0222-14-118	1				
14-120		COVER,OIL PUMP			
B6BF-14-121	1				
14-124		SCREW,OIL PUMP COVER			
FE1H-14-124	7				
14-132B		GEAR,INNER			
B6S7-14-132	1				
14-133		PIN,GROOVED			
*B6S8-14-133	2				6305-6601
14-141		GEAR,OUTER			
B6S7-14-141	1				
14-240		STRAINER,OIL			
BPE8-14-240	1				
14-248		GASKET,OIL STRAINER			

6305 NA3** -714961
6601 NA3** -719621

CAT. AUNA05-04

1997-07

1400 OIL PUMP & FILTER

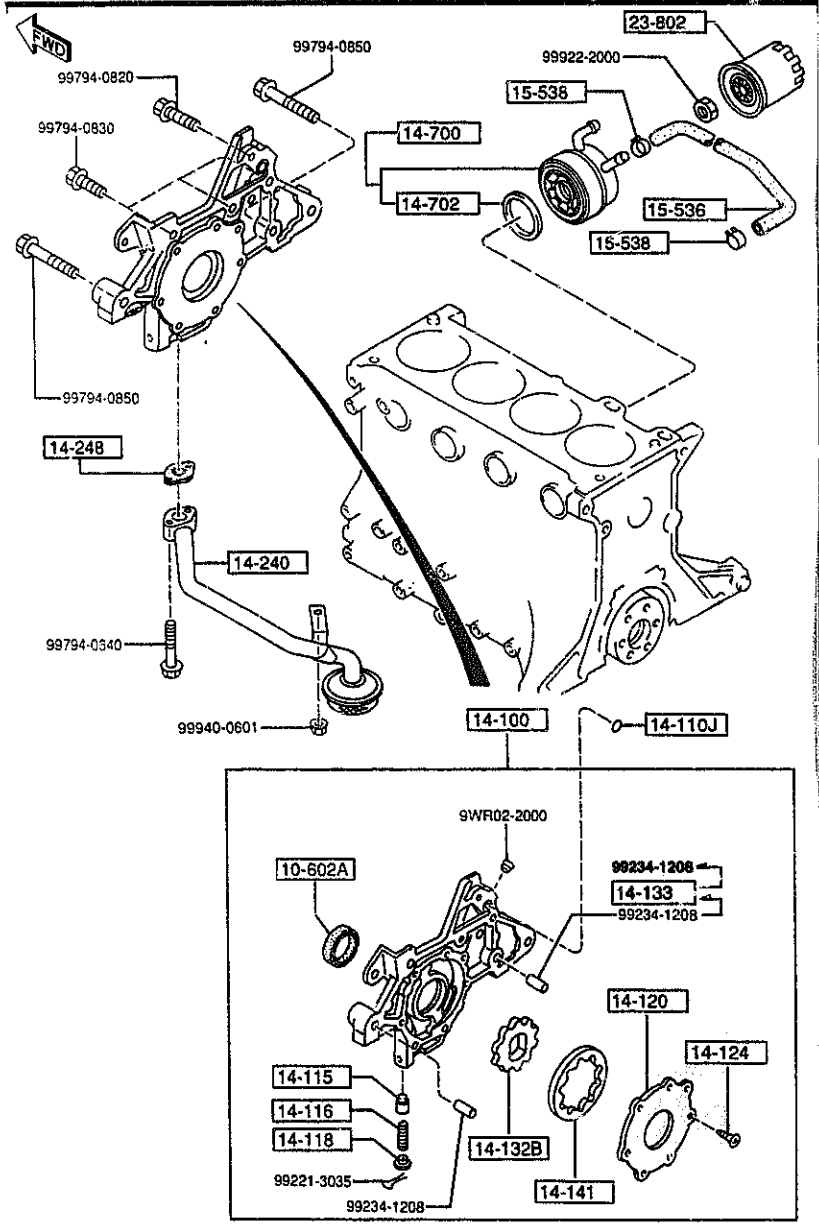

AUNA05

1400 -2 * OIL PUMP & FILTER

PART NO.	QTY	MODEL/RESTRICTION	MODEL/RESTRICTION	MODEL/RESTRICTION	FROM-TO
CONT'D					
B6BF-14-248	1				
+---------+					
| 14-700 |		COOLER,OIL			
+---------+					
BPE8-14-700	1				
+---------+					
| 14-702 |		GASKET			
+---------+					
KL01-14-702A	1				
+---------+					
| 15-536 |		HOSE,WATER-OIL COOLER IN.			
+---------+					
BPE8-15-536	1				
+---------+					
| 15-538 |		CLAMP,WATER HOSE			
+---------+					
JF02-15-538	2				-5C01
B6BF-15-538	2				5C01-
+---------+					
| 23-802 |		CARTRIDGE,OIL FILTER			
+---------+					
B6Y1-14-302		(MAZDA MARK,T. ROKI)			
AN(B6Y1-14-302A)	1				-5A01
B6Y1-14-302A	1	(MAZDA MARK T.ROKI)			5A01-

5A01 NA3** -703035
5C01 NA3** -706448

CAT. AUNA05-04

1997-07

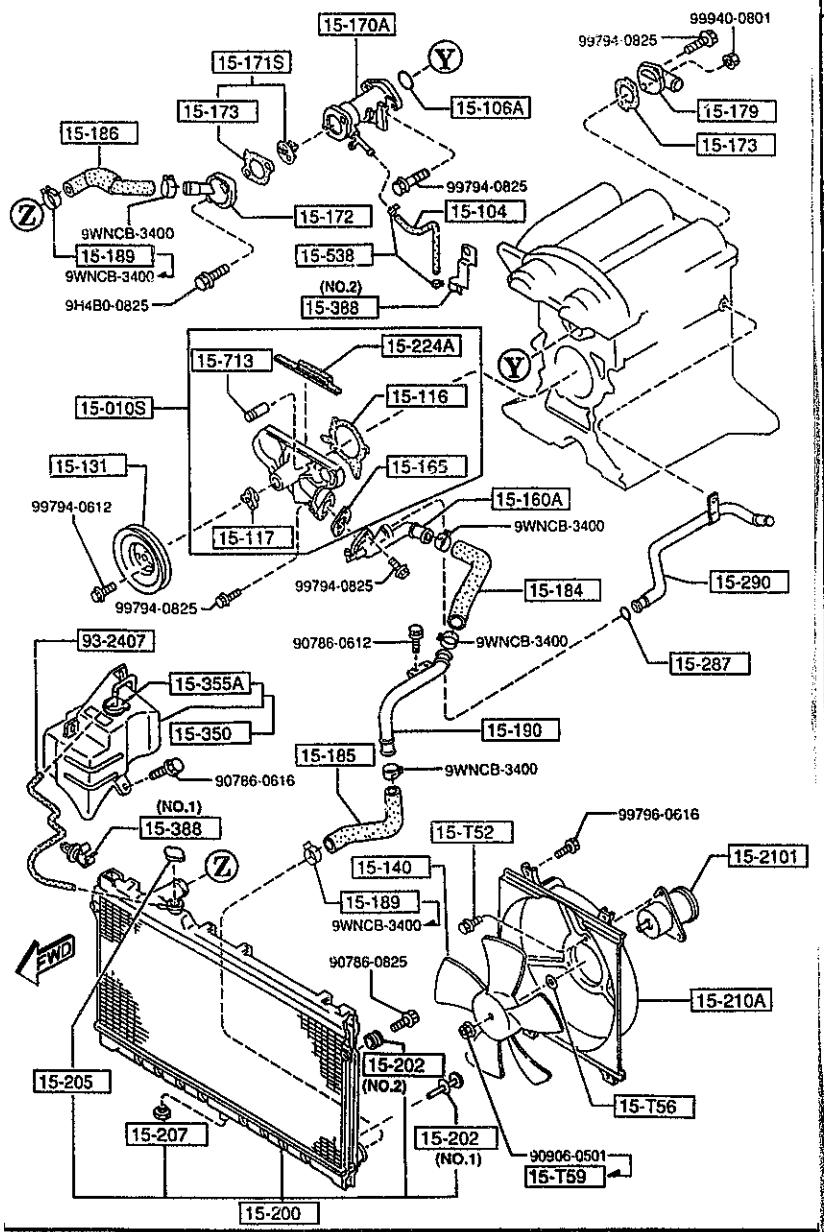

AUNA05

PART NO.	QTY	MODEL/RESTRICTION	MODEL/RESTRICTION	MODEL/RESTRICTION	FROM-TO
| 15-T52 |		SCREW,MOTOR-ELECTRIC FAN			
B6S8-15-T52	3				
| 15-T56 |		WASHER,MOUNT.-FAN			
B61P-15-T56	1				5508-
| 15-T59 |		NUT,COOLING FAN			
B595-15-T59	1				5C01-
| 15-010S |		PUMP SET,WATER			
8ABB-15-010	1				-4917
∧ (8ABB-15-010A)					
8ABB-15-010A	1				4917-
| 15-104 |		HOSE,WATER BY-PASS			
B61P-15-261A	1				
| 15-106A |		RING,'O'-WATER PUMP			
B61P-15-106	1				
| 15-116 |		GASKET,WATER PUMP			
B6BF-15-116	1				
| 15-117 |		BOSS,W.PUMP PULLEY			
E301-15-117	1				
| 15-131 |		PULLEY,WATER PUMP			
B3C7-15-131	1				
| 15-140 |		FAN,COOLING			
B61P-15-140A	1	(MT)			
B64J-15-140	1	CALSONIC (AT)			
| 15-160A |		INLET,WATER PUMP			
B61P-15-160	1				
| 15-165 |		GASKET,W.PUMP INLET			
B621-15-165	1	NON ASBESTOS			

4917 NA35* -603196
5508 NA35* -620210
5C01 NA3** -706448

CAT. AUNA05-04

1997-07

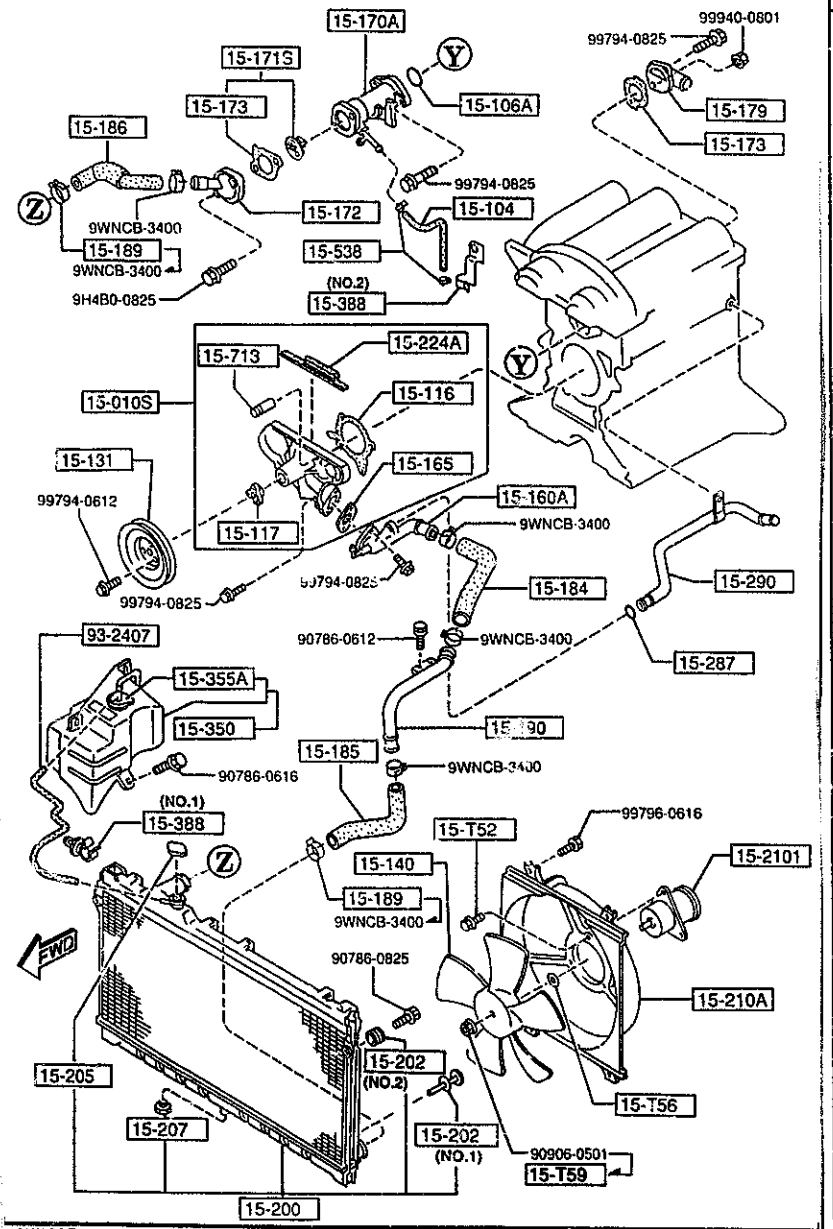

AUNA05

PART NO.	QTY	MODEL/RESTRICTION	MODEL/RESTRICTION	MODEL/RESTRICTION	FROM-TO
15-170A		COVER,THERMO			
BPE8-15-170A	1				
15-171S		THERMOSTAT SET			
8AB8-15-171	1				
15-172		COVER,THERMOSTAT			
BPE8-15-172	1				
15-173		GASKET,THERMOSTAT COVER			
B621-15-173	2	NON ASBESTOS			
15-179		OUTLET,WATER			
BPE8-15-179	1				
15-184		HOSE,WATER			
B61P-15-184	1				
15-185		HOSE,WATER			
BPE8-15-185	1				
15-186		HOSE,WATER			
BPE8-15-186	1				
15-189		CLAMP,HOSE			
B366-15-182	2				-5501
15-190		PIPE,WATER			
B61P-15-190	1				
15-200		RADIATOR			
BPE8-15-200	1	(MT)			
BPE9-15-200	1	(AT)			
15-202		RUBBER,MOUNT			
B61P-15-202	2	(ILLUST. NO.1)			
N326-15-202	2	(ILLUST. NO.2)			
15-205		CAP,RADIATOR			
D316-15-205		CALSONIC			

5501 NA35* -620210

1500 COOLING SYSTEM

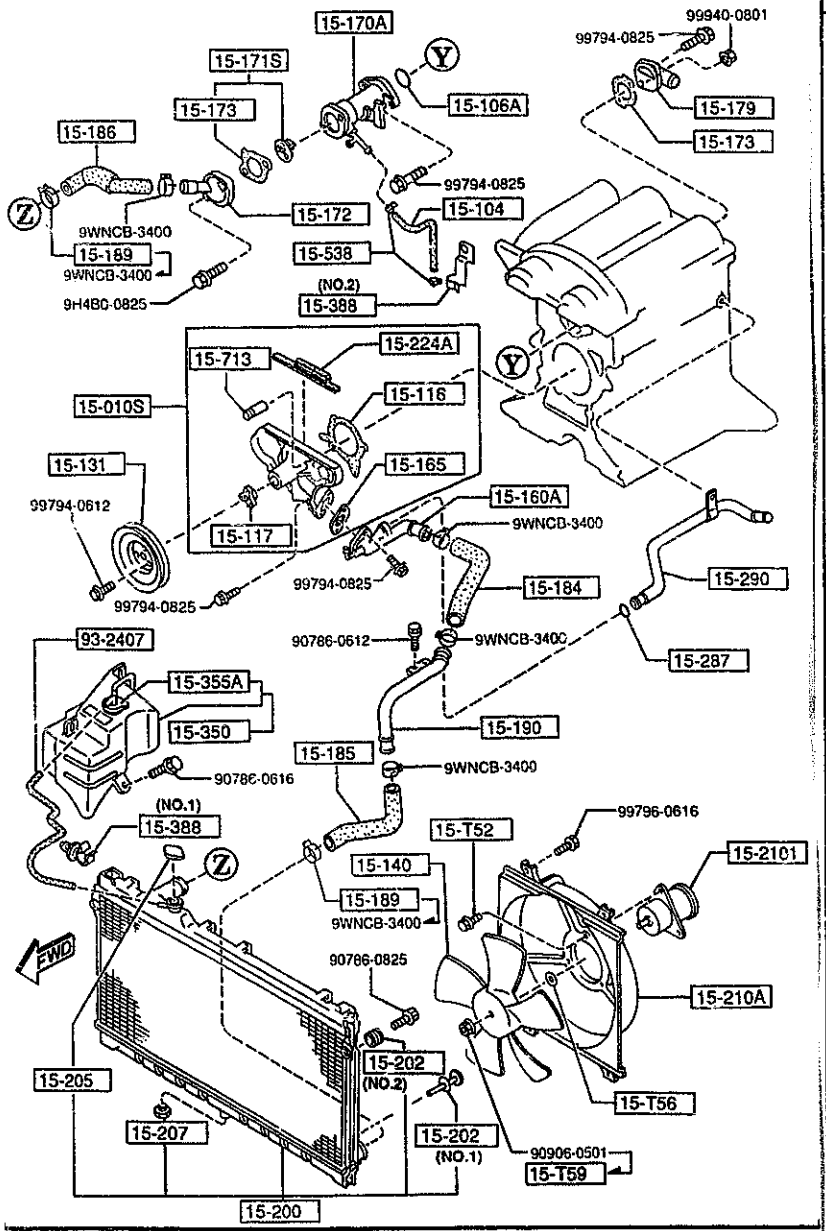

AUNA05

PART NO.	QTY	MODEL/RESTRICTION	MODEL/RESTRICTION	MODEL/RESTRICTION	FROM-TO
CONT'D					
	1				
+---------+					
| 15-207 |		COCK,DRAIN			
+---------+					
NF01-15-203	1	CALSONIC			
+---------+					
| 15-210A |		COWLING,RADIATOR			
+---------+					
B61P-15-210B	1				
+---------+					
| 15-2101 |		FAN DRIVE			
+---------+					
B61P-15-150B	1	(MT)			
B64J-15-150A	1	(AT)			
+---------+					
| 15-224A |		RUBBER,SEAL			
+---------+					
B660-10-543B	1				
+---------+					
| 15-287 |		RING,'O'-WATER BYPAS S			
+---------+					
E301-15-287	1				
+---------+					
| 15-290 |		PIPE,BYPASS			
+---------+					
BPEB-15-290	1				
+---------+					
| 15-350 |		TANK,SUB-RADIATOR			
+---------+					
B61P-15-350D	1				
+---------+					
| 15-355A |		CAP,SUB TANK			
+---------+					
B61P-15-355A	1				
+---------+					
| 15-388 |		CLIP,HOSE-SUB T.& WA TER H			
+---------+					
F201-15-388A	1	(ILLUST. NO.1)			
B61P-15-547	1	(ILLUST. NO.2)			
+---------+					
| 15-538 |		CLAMP,WATER HOSE			
+---------+					
JF02-15-538	2				-5C01
B6BF-15-538	2				5C01-
+---------+					
| 15-713 |		SET PIN,SPRING			
+---------+					
F801-15-713	1				
+---------+					
| 93-2407 |		HOSE,WATER			
+---------+					
99324-07610	1				
5C01 NA3** -706448					

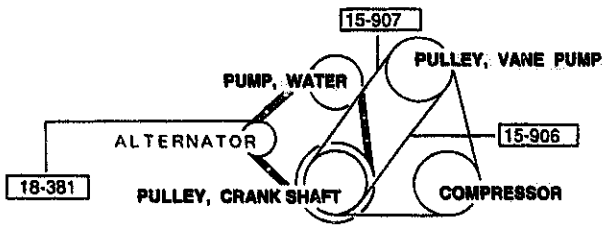

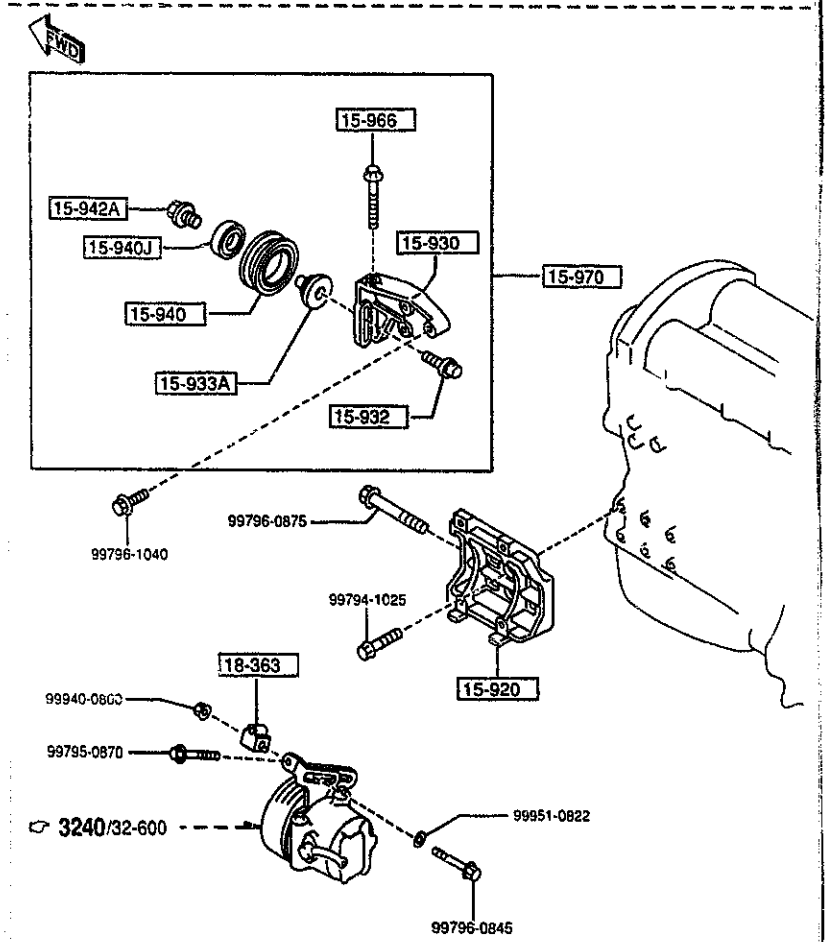

PART NO.	QTY	MODEL/RESTRICTION	MODEL/RESTRICTION	MODEL/RESTRICTION	FROM-TO
15-906		BELT'V'			
B61P-15-907A	1	4PK-855 MITSUBOSHI (W/O AIR CON.+W/POWER STEERING)			
15-907		BELT'V'			
B3C7-15-907C	1	4PK L=848MM (W/AIR CON.+W/O POWER STEERING)			
BPF3-15-909	1	(A) 4PK L=940MM BAND (W/AIR CON.+W/POWER STEERING)			
BPE8-15-908	1	(E) GOODYEAR 4PK848 (W/AIR CON.+W/O POWER STEERING)			4C01-
BPE8-15-909	1	(A) GOODYEAR 4PK940 (W/AIR CON.+W/POWER STEERING)			4C01-
15-920		BRACKET,COMPRESSOR			
BPE8-15-810A	1	(A) (W/AIR CON.)			
15-930		BRACKET,IDLE PULLEY			
BP01-15-951	1	(A) (W/AIR CON.+W/O POWER STEERING)			
15-932		SHAFT,PULLEY			
B631-15-932	1	(A) (W/AIR CON.+W/O POWER STEERING)			
15-933A		COLLAR			
BP01-15-933	1	(A) (W/AIR CON.+W/O POWER STEERING)			
15-940		PULLEY,IDLE			
BP01-15-940	1	(A) (W/AIR CON.+W/O POWER STEERING)			
15-940J		BEARING			
99606-83020	1	(W/AIR CON.+W/O POWER STEERING)			

4C01 NA35* -609691

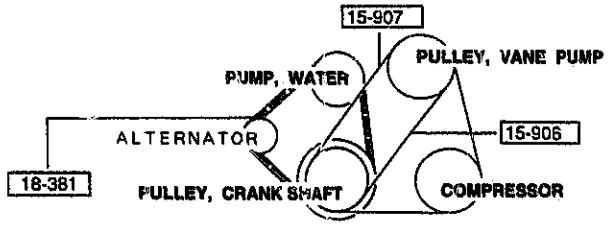

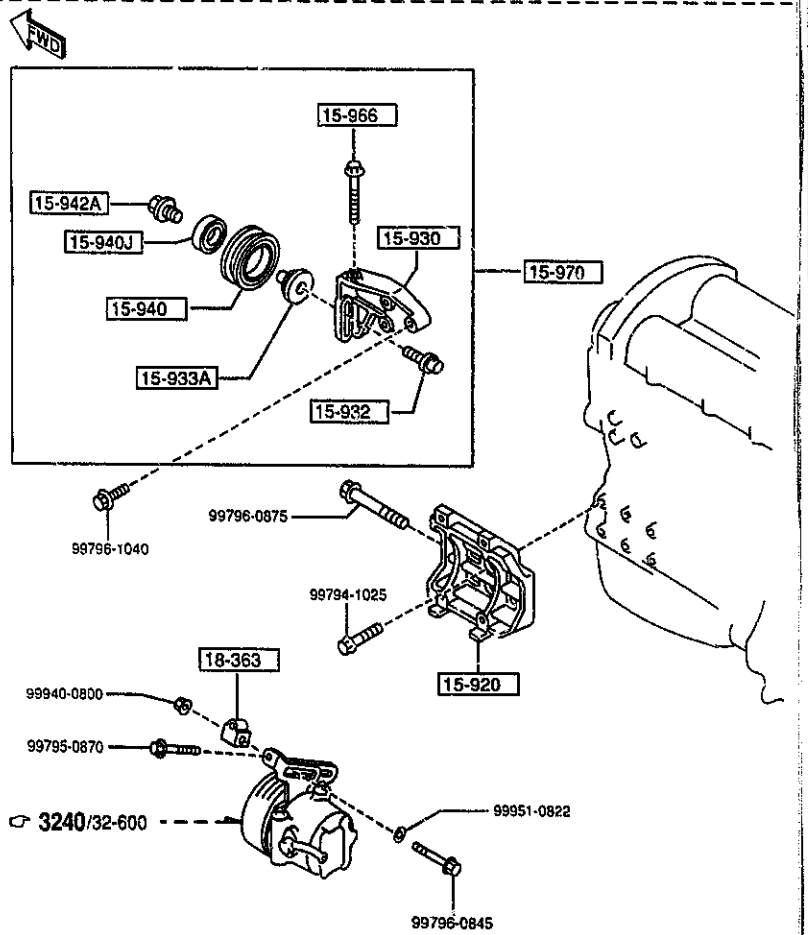

PART NO.	QTY	MODEL/RESTRICTION	MODEL/RESTRICTION	MODEL/RESTRICTION	FROM-TO
15-942A		COLLAR			
E564-15-942	1	(A) (W/AIR CON.+W/O POWER STEERING)			
15-966		BOLT,ADJUST			
E564-15-934	1	(A) (W/AIR CON.+W/O POWER STEERING)			
15-970		PULLEY,IDLE			
BP01-15-930	1	(A) (W/AIR CON.+W/O POWER STEERING)			
18-363		SPACER,STRAP			
FP02-18-363	1	(W/O AIR CON.+W/POWER STEERING)			
18-381		BELT'V'			
*8596-18-381	1	4PK L=885 GOOD YEAR			
*B6BF-18-381	1	4PK L=885 BANDO			

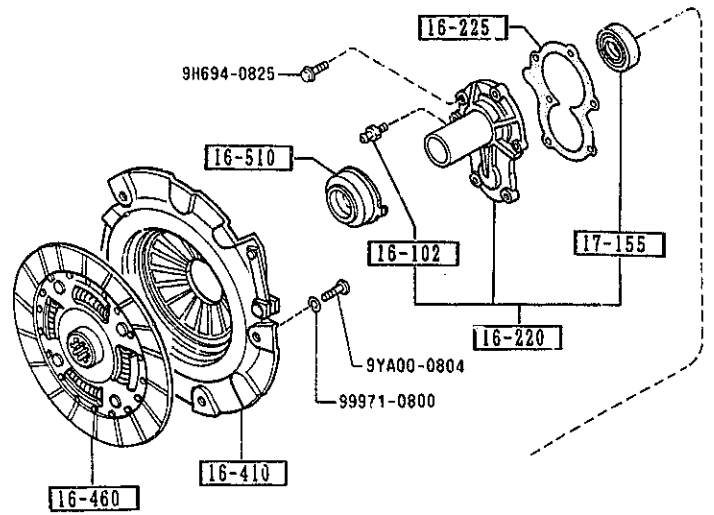

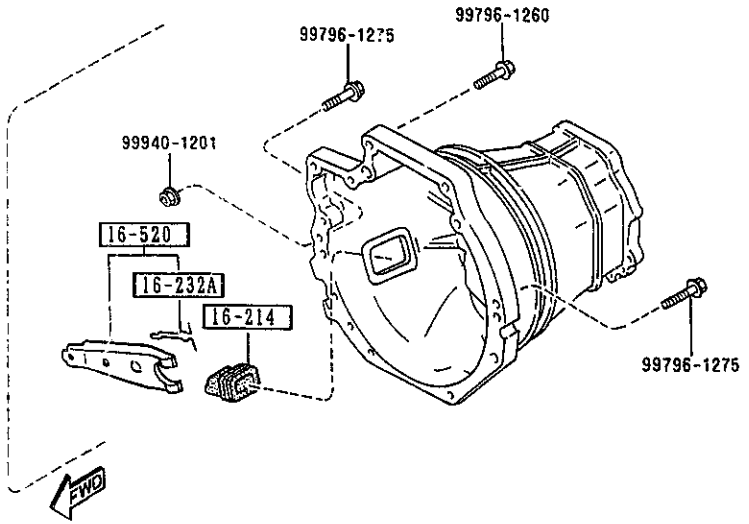

AUNA05

1600 -1 * CLUTCH DISC & COVER

PART NO.	QTY	MODEL/RESTRICTION	MODEL/RESTRICTION	MODEL/RESTRICTION	FROM-TO
16-102		PIN,PIVOT-CLUTCH REL .FORK			
0603-16-102B	1				
16-214		COVER,DUST-CLUTCH FORK			
FE51-16-214A (FE51-16-214A)	1				-5401
FE51-16-214A	1				5401-
16-220		COVER,FRONT CLUTCH			
B622-16-220AN(B622-16-220A)	1				-5801
B622-16-220A	1				5801-
16-225		GASKET,FRONT COVER			
FE50-16-225A	1				
16-232A		SUPPORTER,FORK			
1416-16-232A	1				
16-410		COVER,CLUTCH			
BP07-16-410	1				
16-460		DISC,CLUTCH			
BP07-16-460	1				
16-510		COLLAR,CLUTCH REL.			
B622-16-510	1				
16-520		FORK,CLUTCH RELEASE			
B622-16-520	1				
17-155		SEAL,OIL			
H501-17-103	1				

5401 NA35* -619598
5801 NA3** -700842

CAT. AUNA05-04 1997-07

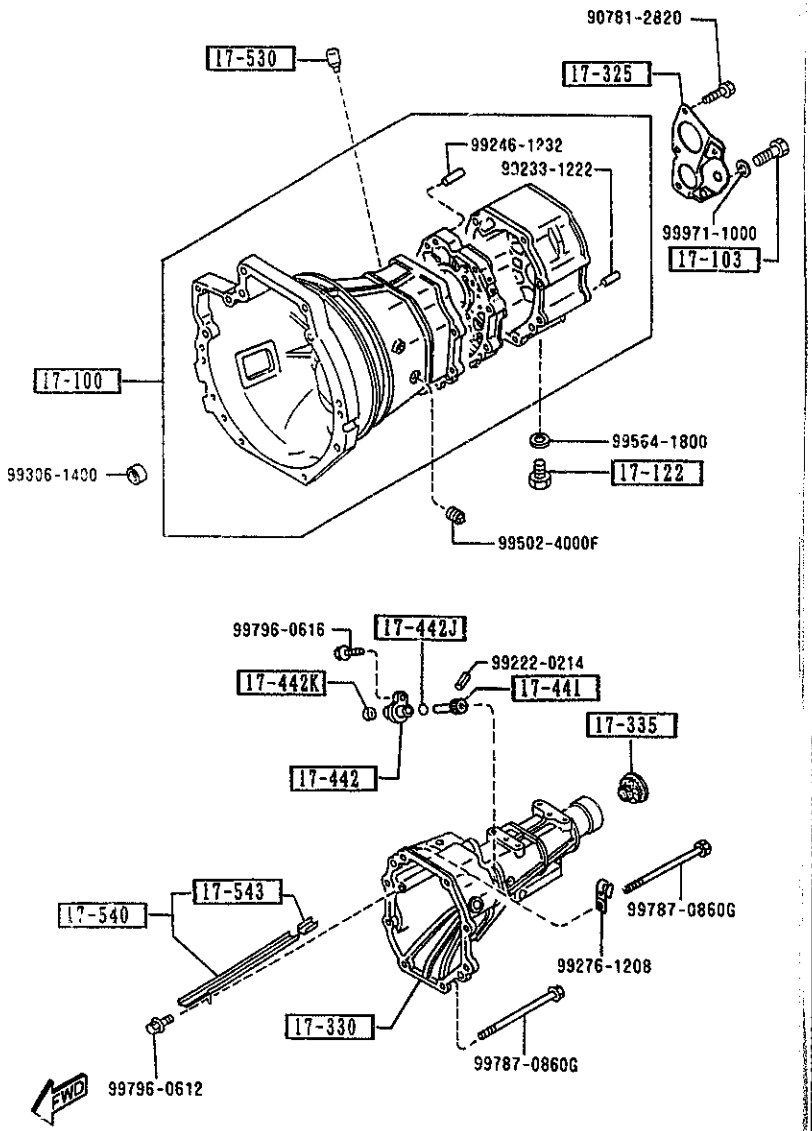

1700 -1 * MANUAL TRANSMISSION CASE

PART NO.	QTY	MODEL/RESTRICTION	MODEL/RESTRICTION	MODEL/RESTRICTION	FROM-TO
17-100		CASE,T/MISSION			
M526-17-100A	1				
17-103		BOLT			
M501-17-103	2				
17-122		PLUG,MAGNET			
0810-17-121	1				
17-325		COVER,BEARING			
M501-17-370A	1				
17-330		HOUSING,EXTENSION			
M519-17-330	1				
17-335		SEAL,OIL			
M507-17-335A	1				
17-441		GEAR,DRIVEN			
M510-17-441	1	N=22			
17-442		SLEEVE,SPEEDOMETER			
1669-17-442B	1				
17-442J		RING,'O'			
1011-17-443	1				
17-442K		SEAL,OIL			
99586-08166	1				
17-530		BREATHER,AIR-T/MISSION			
0884-17-530	1				
17-540		PASS,OIL			
M509-17-540	1				
17-543		RUBBER,SEAL			
M501-17-543A	1				

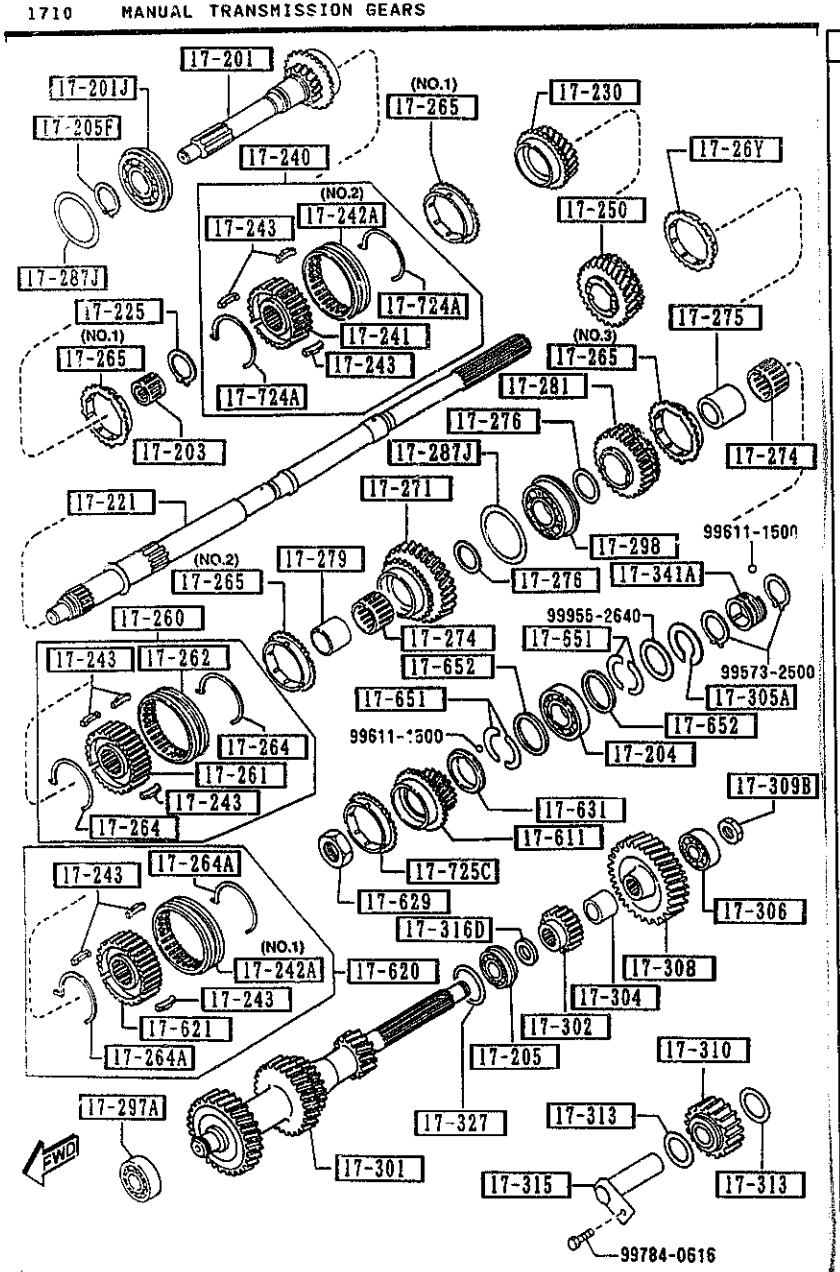

AUNA05

PART NO.	QTY	MODEL/RESTRICTION	MODEL/RESTRICTION	MODEL/RESTRICTION	FROM-TO
17-201		GEAR,MAIN DRIVE			
M516-17-201	1				
17-201J		BEARING,BALL-MAIN DRIVE GEAR			
M502-17-295C	1				
17-203		BEARING,NEEDLE			
M501-17-210A	1				
17-204		BEARING,BALL-MAIN SHAFT			
M503-17-204	1				-4C01
99606-63053	1				4C01-
17-205		BEARING,ROLLER			
R502-17-306A	1				-5501
M506-17-297	1				5501-
17-205F		RING,RETAINING			
M501-17-205	1				
17-221		SHAFT,MAIN			
M505-17-221B	1				
17-225		RING,SNAP			
0317-17-225	1				
17-230		GEAR,3RD			
M513-17-231B	1				
17-240		HUB SET,CLUTCH-3RD & 4TH			
M517-17-240	1				
17-241		HUB,CLUTCH			
M501-17-241C	1				
17-242A		SLEEVE,CLUTCH HUB			
F401-17-242A	1	(ILLUST. NO.1)			
M502-17-242	1	(ILLUST. NO.2)			
17-243		KEY,SYNCHRONIZER			

4C01 NA35* -609691
5501 NA35* -620210

CAT. AUNA05-04

1997-07

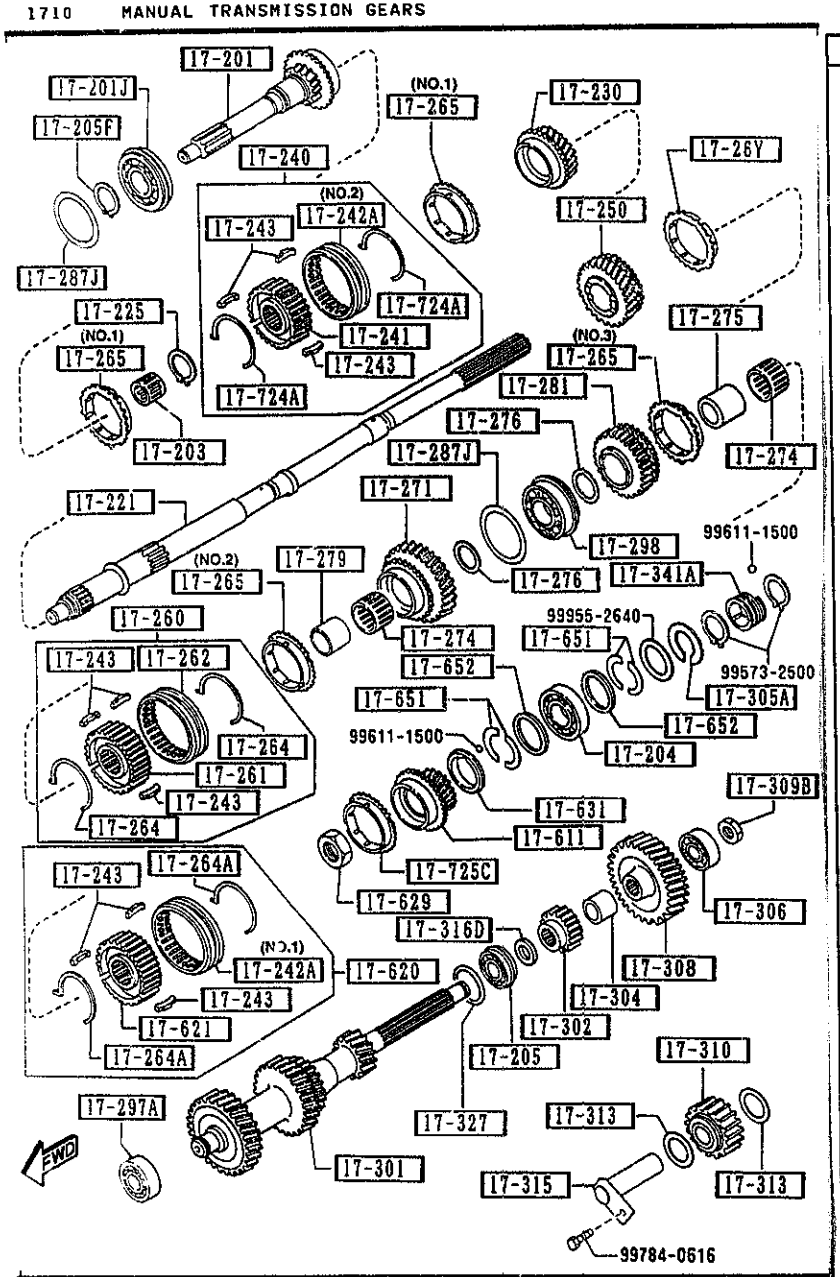

AUNA05

PART NO.	QTY	MODEL/RESTRICTION	MODEL/RESTRICTION	MODEL/RESTRICTION	FROM-TO
CONT'D					
F401-17-243A	9				
17-250		GEAR,2ND			
M520-17-251A	1				
17-26Y		RING,SYNCHRONIZER			
R504-17-26Y	1				
17-260		HUB SET,CLUTCH-1ST & 2ND			
M517-17-260	1				
17-261		HUB,CLUTCH			
M511-17-261	1				
17-262		SLEEVE,CLUTCH HUB			
M505-17-262	1				
17-264		SPRING,SYNCHRO. KEY			
G401-17-264	2				
17-264A		SPRING,SYNCHRONIZER			
F401-17-264A	2				
17-265		RING,SYNCHRONIZER			
G501-17-265A	2	(ILLUST. NO.1)			
M502-17-265C	1	(ILLUST. NO.2)			
M504-17-265A	1	(ILLUST. NO.3)			
17-271		GEAR,1ST			
M516-17-271A	1				
17-274		BEARING,NEEDLE			
4069-17-283A	2				
17-275		RACE,INNER			
4069-17-284E	1				
17-276		WASHER,THRUST			
0259-17-274A	2	T=3.0MM			
0259-17-276		T=2.2MM			

CAT. AUNA05-04

1997-07

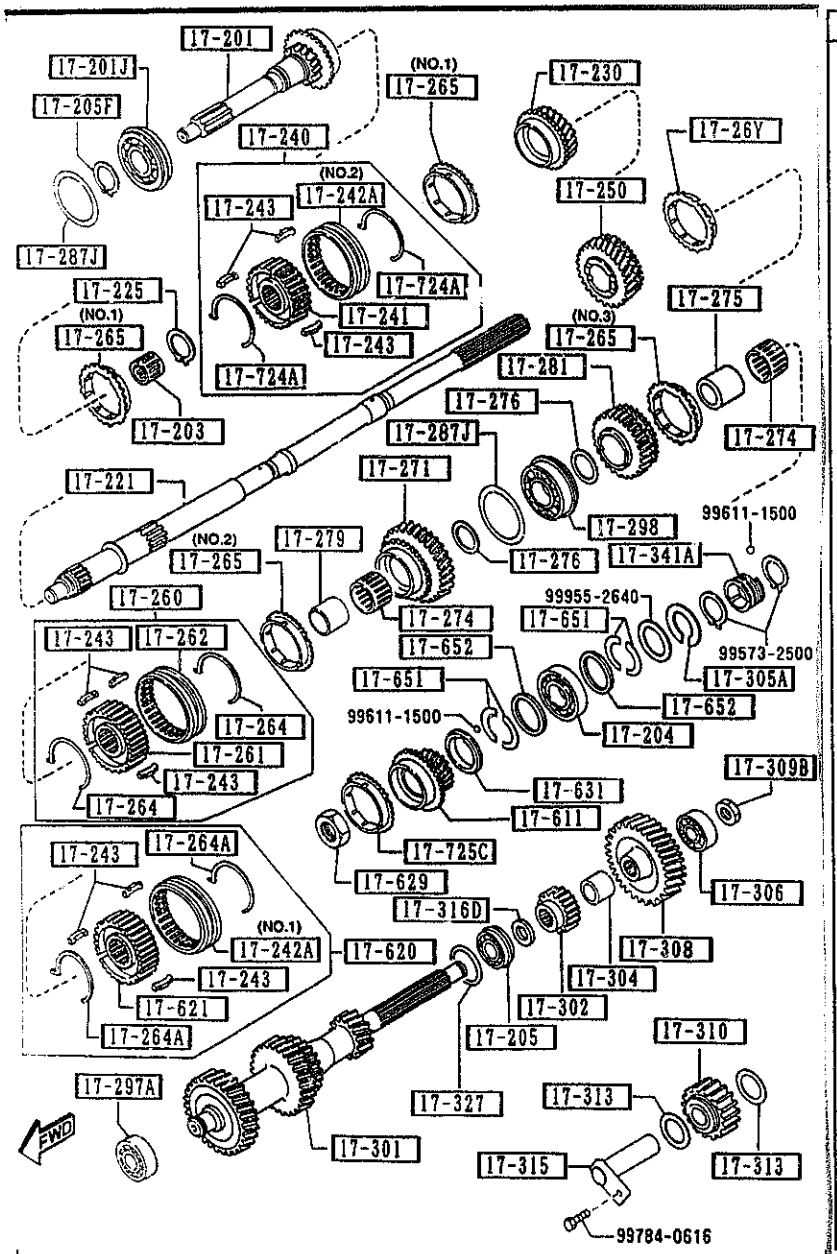

AUNA05

PART NO.	QTY	MODEL/RESTRICTION	MODEL/RESTRICTION	MODEL/RESTRICTION	FROM-TO
CONT'D					
	2				
0259-17-277		T=2.7MM			
	2				
0259-17-278		T=3.2MM			
	2				
0259-17-279		T=3.7MM			
	2				
+----------+					
| 17-279 |		SLEEVE,GEAR			
+----------+					
8540-17-275A	1				
+----------+					
| 17-281 |		GEAR,REVERSE			
+----------+					
M513-17-281	1				
+----------+					
| 17-287J |		SHIM,ADJUST			
+----------+					
99963-6310		T=0.1MM			
	2				
99963-6315		T=0.15MM			
	1				
99963-6330		T=0.3MM			
	2				
+----------+					
| 17-297A |		BEARING,BALL-COUNTER SHAFT G.			
+----------+					
M502-17-297A	1				
+----------+					
| 17-298 |		BEARING			
+----------+					
M502-17-298A	1				
+----------+					
| 17-301 |		GEAR,COUNTER SHAFT			
+----------+					
M528-17-301A	1				
+----------+					
| 17-302 |		GEAR,COUNTER REVERSE			
+----------+					
M516-17-302	1				
+----------+					
| 17-304 |		SPACER			
+----------+					
M504-17-304	1				
+----------+					
| 17-305A |		RING,RETAINING-BALL BEARING			
+----------+					
0839-17-305B	1				
+----------+					
| 17-306 |		BEARING,BALL			
+----------+					
M502-17-299B	1				-4C01

4C01 NA35* -609691

CAT. AUNA05-04

1997-07

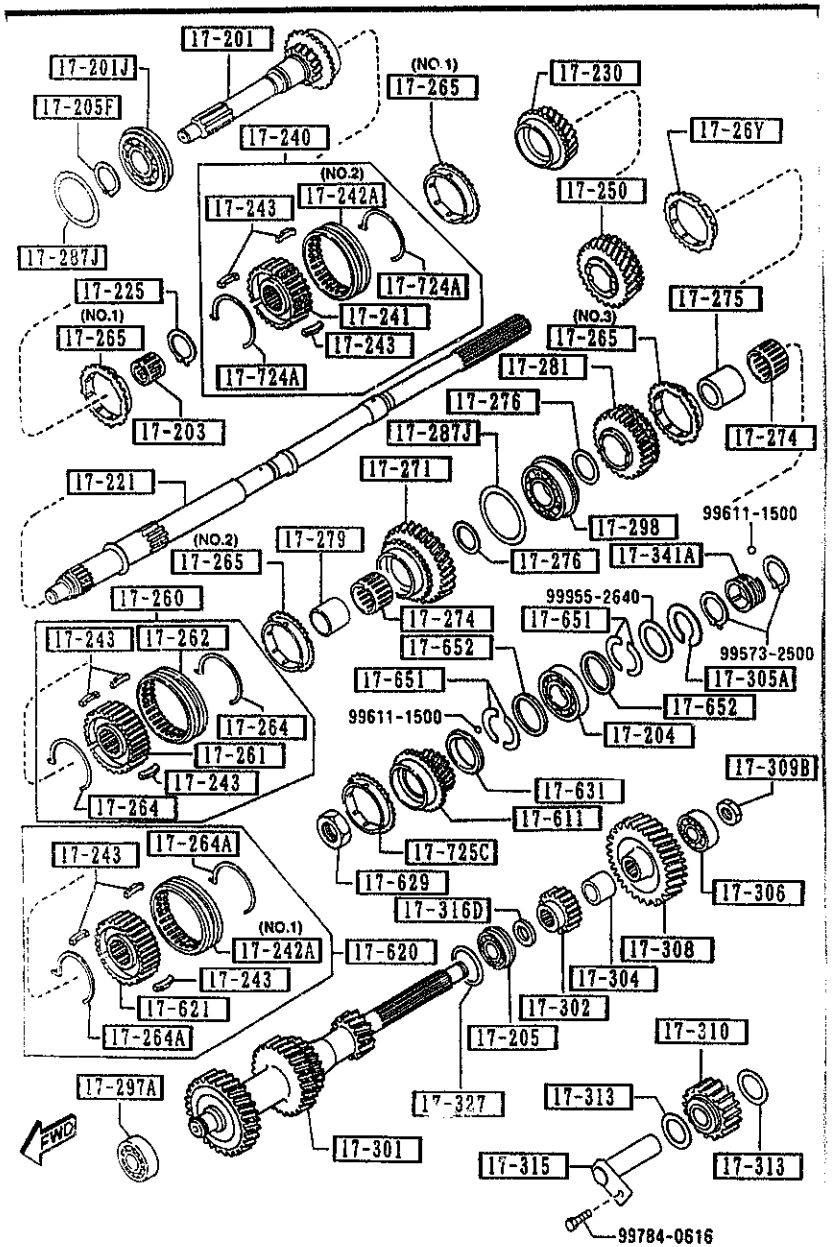

PART NO.	QTY	MODEL/RESTRICTION	MODEL/RESTRICTION	MODEL/RESTRICTION	FROM-TO
CONT'D					
P502-17-204	1				4C01-
17-308		GEAR,COUNTER			
M510-17-308	1				
17-309B		NUT,LOCK-COUNTER SHAFT BR			
M501-17-309	1				
17-310		GEAR,REVERSE IDLE			
M513-17-310	1				
17-313		WASHER,THRUST-REVERSE IDLE G. T=2.0MM			
M501-17-313	2				
17-315		SHAFT,REV. IDLE GEAR			
M501-17-140	1				
17-316D		SPACER			
R502-17-316	1				-5501
17-327		SHIM,ADJUST-COUNTER SHAFT GEAR T=0.1MM			
0305-17-327	2				
0305-17-328	1	T=0.3MM			
17-341A		GEAR,SPEEDO.DRIVE			
M503-17-341	1				
17-611		GEAR,OVER TOP			
M517-17-611	1				
17-620		HUB SET,CLUTCH-O.T. & REV			
M505-17-620	1				
17-621		HUB,CLUTCH			
M505-17-621	1				
17-629		NUT,LOCK-CLUTCH HUB			
8601-17-629	1				

4C01 NA35* -609691
5501 NA35* -620210

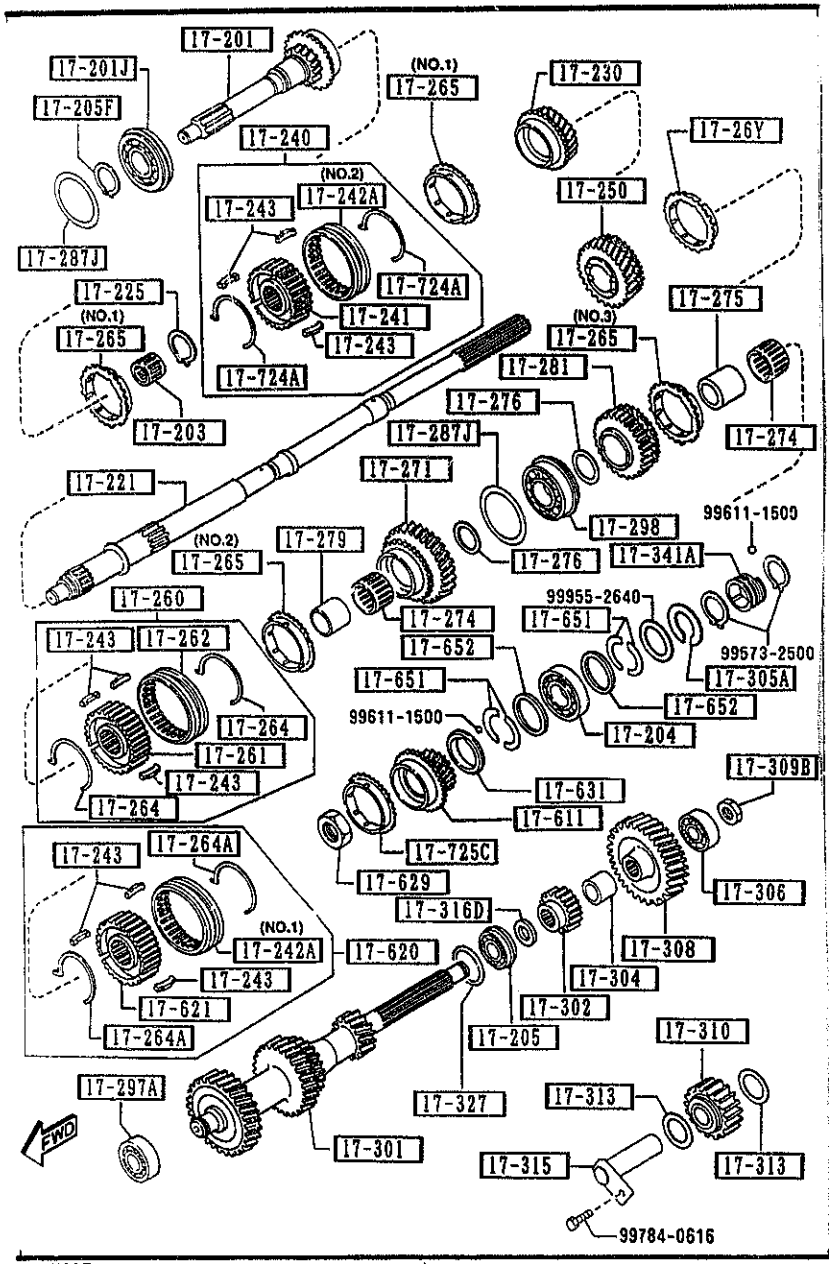

AUNA05

PART NO.	QTY	MODEL/RESTRICTION	MODEL/RESTRICTION	MODEL/RESTRICTION	FROM-TO
17-631		WASHER,THRUST LOCK-O VER TOP G.			
0884-17-632B	1	T=6.2MM			
0884-17-633B	1	T=6.4MM			
0884-17-634B	1	T=6.5MM			
0884-17-635B	1	T=6.6MM			
17-651		WASHER,THRUST			
M501-17-651	4	T=3.0MM			
M501-17-653	2	T=3.1MM			
M501-17-654	2	T=3.2MM			
M501-17-655	2	T=2.9MM			
17-652		RING,THRUST WASHER			
M501-17-652	2	T=2.0MM			
17-724A		SPRING,SYNCHRO.KEY			
W501-17-724	2				
17-725C		RING,SYNCHRONIZER			
V501-17-725	1				

CAT. AUNA05-04

1997-07

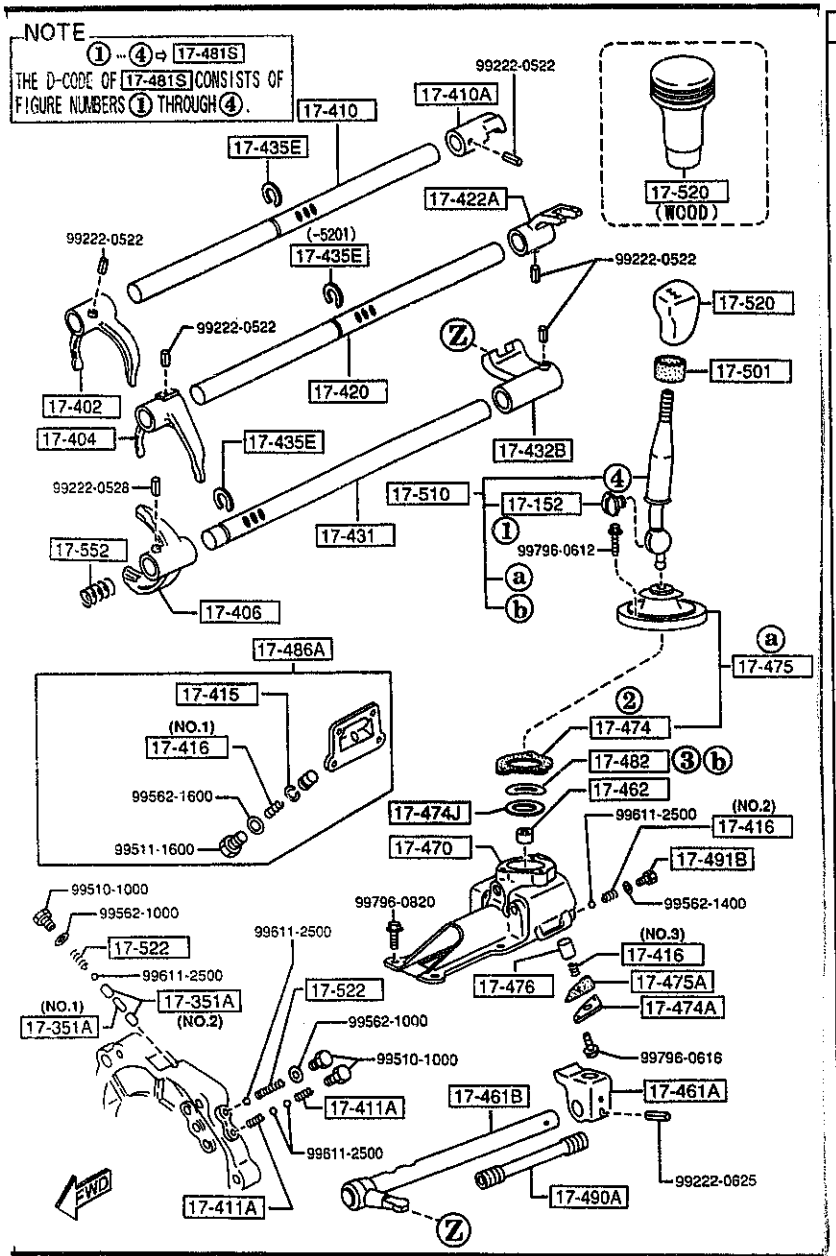

AUNA05

PART NO.	QTY	MODEL/RESTRICTION	MODEL/RESTRICTION	MODEL/RESTRICTION	FROM-TO
17-152		BUSH			
M501-17-515	1				
17-351A		PIN,INTER LOCK			
R501-17-351	1	(ILLUST. NO.1)			
0114-17-351	2	(ILLUST. NO.2)			
17-402		FORK,SHIFT (1ST & 2ND)			
M503-17-402	1				
17-404		FORK,SHIFT (3RD & 4TH)			
M501-17-404B	1				
17-406		FORK,SHIFT			
M504-17-406A	1				
17-410		ROD,SHIFT(1ST&2ND)			
M503-17-411	1				
17-410A		END,S/ROD(1ST&2ND)			
M507-17-412A (M507-17-412A)	1				-5201
M507-17-412A	1				5201-
17-411A		SPRING,SHIFT ROD-REVERSE			
0014-17-411	2				
17-415		RING,RETAINING-SHIFT ROD END			
3648-17-415	1				
17-416		SPRING,SHIFT ROD END			
M501-17-416	1	(ILLUST. NO.1)			
M504-17-416	1	(ILLUST. NO.2)			
M505-17-416	1	(ILLUST. NO.3)			
17-420		ROD,SHIFT(3RD&4TH)			
M504-17-421A (M504-17-421A)	1				-5201
M504-17-421A	1				5201-

5201 NA35* -614193

CAT. AUNA05-04

1997-07

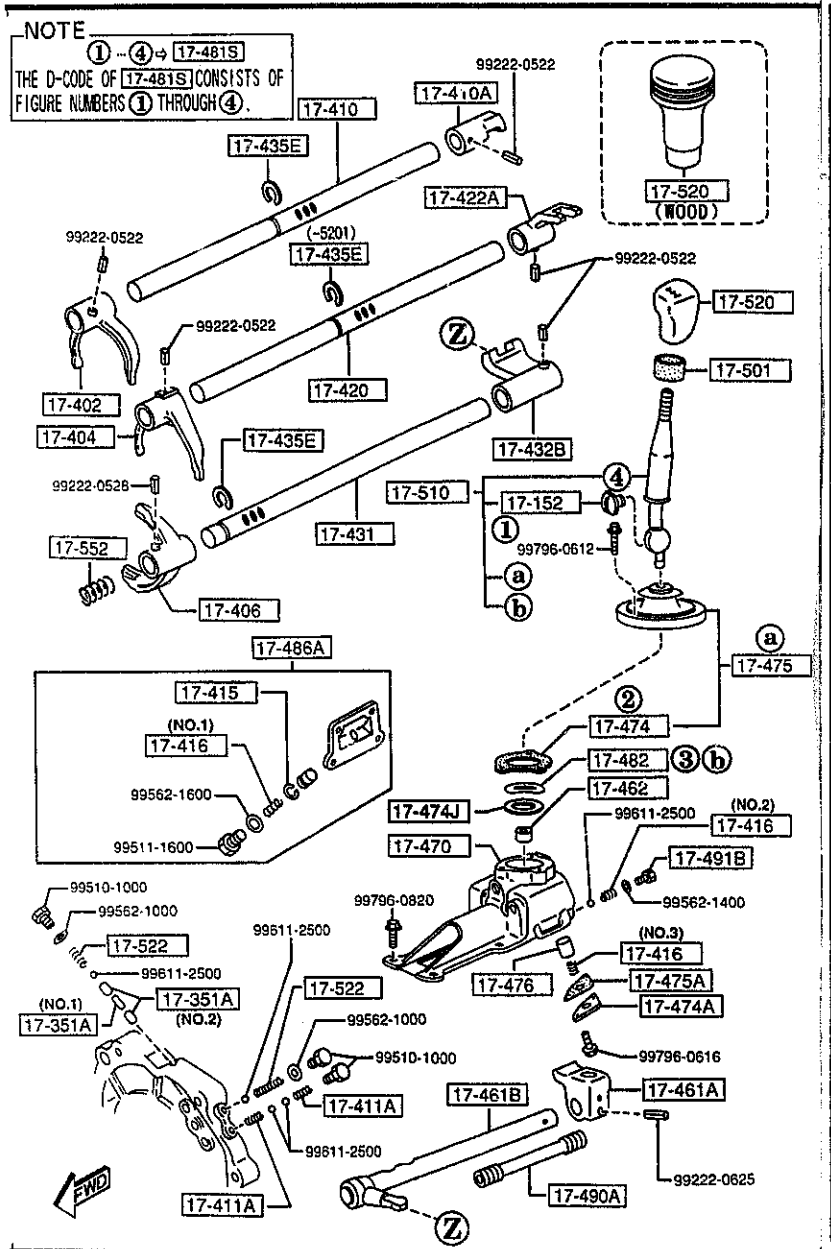

PART NO.	QTY	MODEL/RESTRICTION	MODEL/RESTRICTION	MODEL/RESTRICTION	FROM-TO
17-422A		END,S/ROD(3RD&4TH)			
M507-17-422 A (M507-17-422A)	1				-5201
M507-17-422A	1				5201-
17-431		ROD,SHIFT-OVER TOP & REVERSE			
M506-17-431A	1				
17-432B		END,SHIFT ROD(O/TOP& REV.)			
M508-17-432	1				
17-435E		RING,RETAINING			
R502-17-435	3				-5201
R502-17-435	2				5201-
17-461A		END,CONTROL LEVER			
M508-17-461A	1				
17-461B		ROD,CONTROL			
M516-17-450A	1				
17-462		SHEET,SPRING			
0398-17-462A	1				
17-470		CASE,CHANGE CONTROL			
M510-17-470C	1				
17-474		GASKET,COVER PLATE			
0303-17-474	1				
17-474A		CAP,SPRING			
M501-17-474	1				
17-474J		SHIM,ADJUST			
99963-3330	1	T=0.3MM ('95 MODEL)			
17-475		BOOT,DUST-CHANGE LEVER			
M513-17-480A	1				
17-475A		GASKET,SPRING CAP			

5201 NA35* -614193

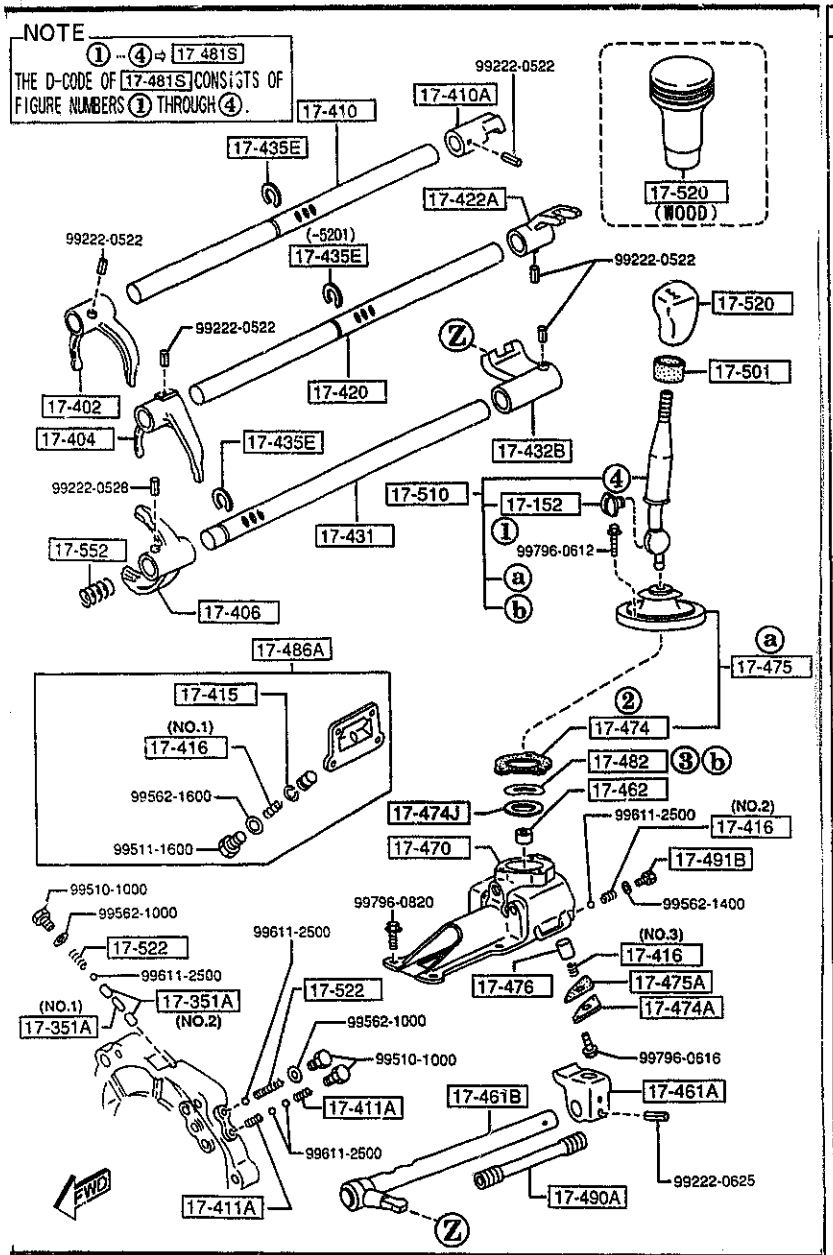

AUNA05

PART NO.	QTY	MODEL/RESTRICTION	MODEL/RESTRICTION	MODEL/RESTRICTION	FROM-TO
CONT'D					
M501-17-475	1				
17-476		SPINDLE,SELECT LOCK			
M502-17-476A	1				
17-481S		BUSH SET,CHANGE LEVER			
8AN1-17-481	1				
17-482		WASHER,WAVE-CHANGE CONT.CASE			
M505-17-482	1				
17-486A		COVER,BLIND			
R501-17-47X	1				
17-490A		COVER,ROD			
M504-17-490A	1				
17-491B		CAP,SPRING			
0183-17-491	1				
17-501		INSULATOR,CHG LEVER			
M501-17-501	1				
17-510		LEVER,CHANGE			
M524-17-510C	1				
17-520		KNOB,CHANGE LEVER			
M515-17-520	1	(URETHANE)			
00	INT-	NA3 NA4 NA5 NA6 NA7 NA8 BLACK			
M517-17-520	1	(WOOD)			
M518-17-520A	1	(LEATHER)			
17-522		SPRING			
0103-17-411	2				
17-552		SPRING			
M505-17-552	1				

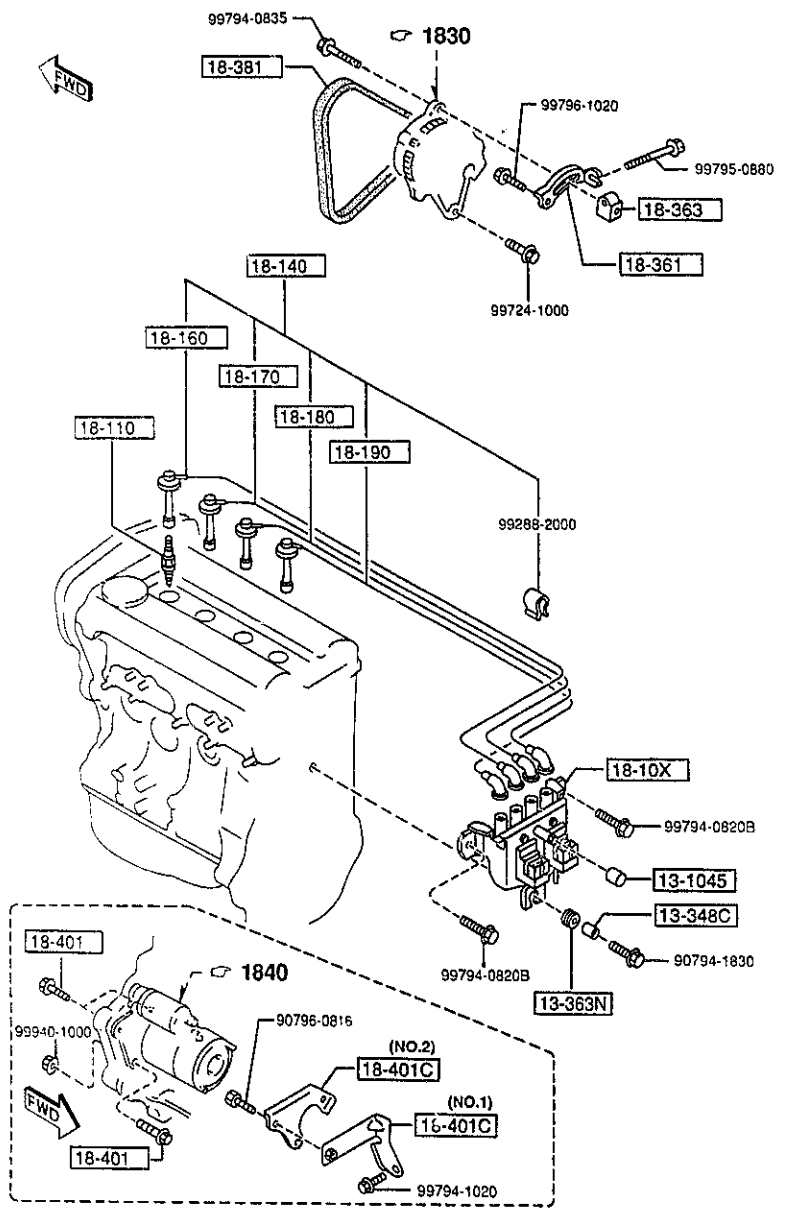

AUNA05

PART NO.	QTY	MODEL/RESTRICTION	MODEL/RESTRICTION	MODEL/RESTRICTION	FROM-TO
13-1045		CAP,BLIND			
JE08-13-104	1				-5403
13-348C		SPACER			
B61P-13-348	1				
13-363N		RUBBER,MOUNTING			
B61P-13-363A	1				
18-10X		COIL & IGNITER			
BPE8-18-10XA	1				-5403
BPE8-18-10XB	1				5403-
18-110		PLUG,SPARK			
BP01-18-110	4	BKR5E-11 NGK (STD.)			
BP02-18-110	4	K16PR-U11 ND (STD.)			
BP03-18-110	4	BKR6E-11 NGK (OPTION COLD TYPE)			
BP04-18-110	4	K20PR-U11 ND (OPTION COLD TYPE)			
18-140		CORD SET,HI.TENSION			
BPE8-18-140A	1				
18-160		CORD NO.1,HI.TENSION			
BPE8-18-T51	1				
18-170		CORD NO.2,HI.TENSION			
BPE8-18-T52	1				
18-180		CORD NO.3,HI.TENSION			
BPE8-18-T53	1				
18-190		CORD NO.4,HI.TENSION			
BPE8-18-T54A	1				
18-361		STRAP,ALTERNATOR			
B6BF-18-361C	1				

5403 NA35* -619601

CAT. AUNA05-04

1997-07

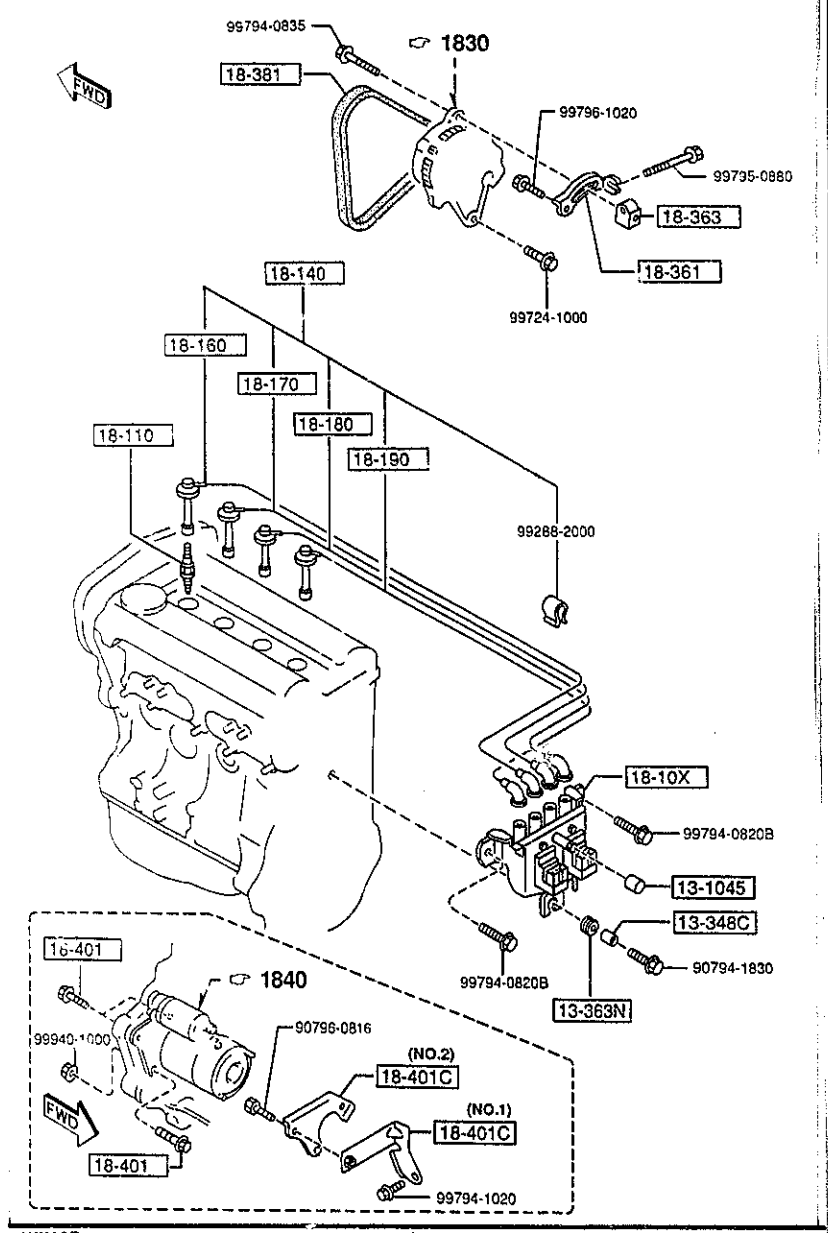

AUNA05

PART NO.	QTY	MODEL/RESTRICTION	MODEL/RESTRICTION	MODEL/RESTRICTION	FROM-TO
18-363		SPACER,STRAP			
FP01-18-363	1				
18-381		BELT'V'			
B596-18-381	1	4PK L=885 GOOD YEAR			
B6BF-18-381	1	4PK L=885 BANDO			
18-401		BOLT,STARTER			
B6BG-18-401 A (B6BG-18-401A)	3				-5C01
*B6BG-18-401A	3				5C01-
18-401C		BRACKET,STARTER			
BPE8-18-410	1	(ILLUST. NO.1) (MT)			
B660-18-411C	1	(ILLUST. NO.2) (MT)			

5C01 NA3** -706448

CAT. AUNA05-04 1997-07

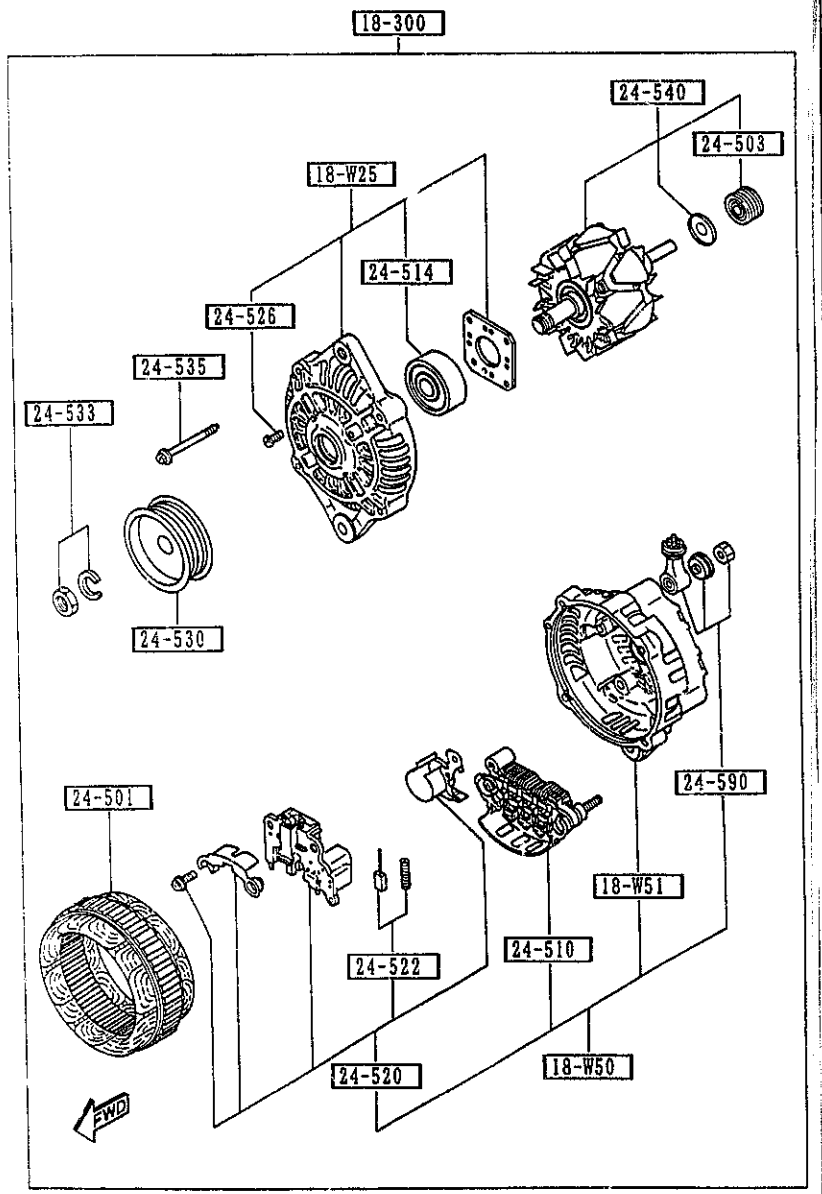

AUNA05

1830 -1 ALTERNATOR

PART NO.	QTY	MODEL/RESTRICTION	MODEL/RESTRICTION	MODEL/RESTRICTION	FROM-TO
18-W25		COVER,FRONT-ALTERNATOR			
FS05-18-W25	1				
18-W50		COVER,REAR-ALTERNATOR			
BPE8-18-W50	1				
18-W51		COVER,REAR-ALTERNATOR (G)			
FS05-18-W51	1				
18-300		ALTERNATOR			
BPE8-18-300	1	(MT)			
BPE9-18-300	1	(AT)			
24-501		STATOR			
JE15-18-W45	1				
24-503		BEARING,BALL-ALT. REAR			
N336-18-W36	1				
24-510		RECTIFIER			
BPE8-18-W60	1				
24-514		BEARING,BALL-ALT. FRONT			
PN16-18-W27	1				
24-520		REGULATOR,VOLTAGE			
B64J-18-W70A	1				
24-522		BRUSH			
B3C7-18-W77	2				
24-526		SCREW SET			
RF71-18-W26	1				
24-530		PULLEY			
B3C7-18-W10	1				
24-533		NUT SET			
B3C7-18-W05	1				

CAT. AUNA05-04

1997-07

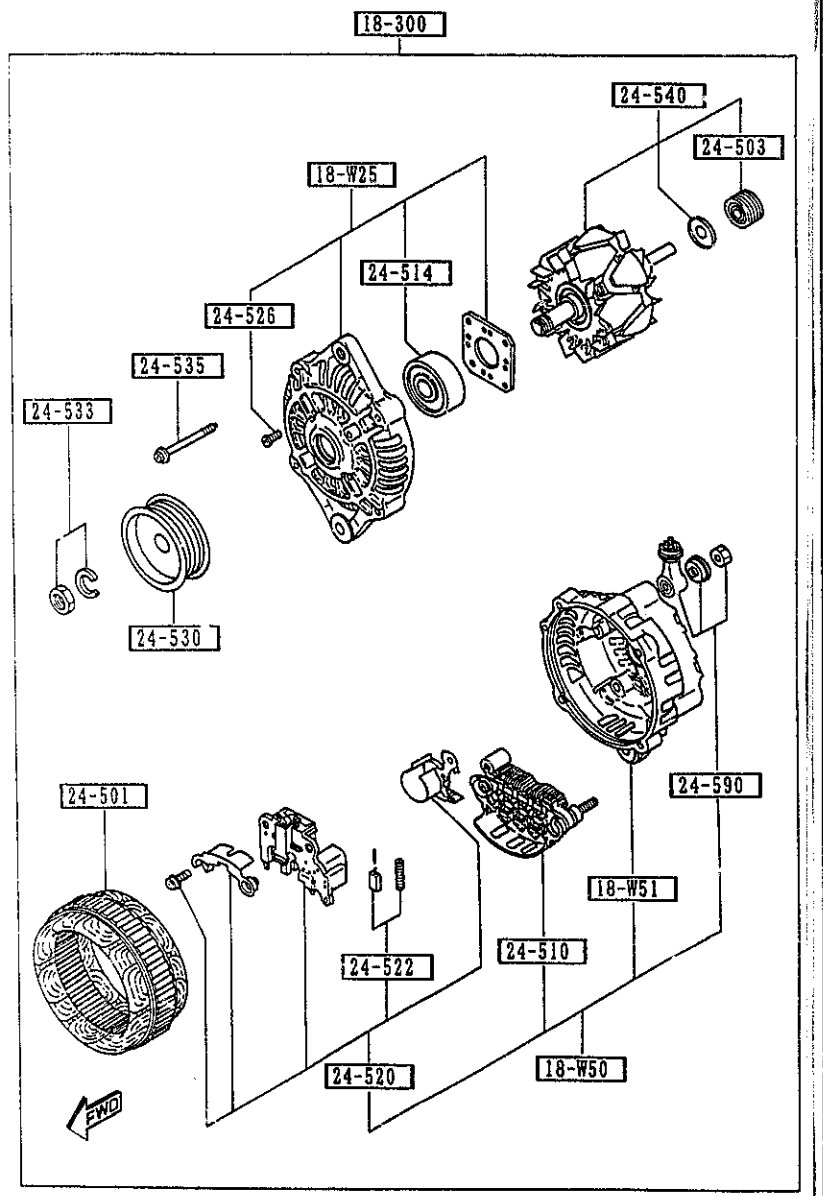

1830 -2 * ALTERNATOR

PART NO.	QTY	MODEL/RESTRICTION	MODEL/RESTRICTION	MODEL/RESTRICTION	FROM-TO
24-535		SCREW SET			
RF71-18-W20	1				
24-540		ROTOR			
B366-18-W35D	1	(MT)			
BPD3-18-W35	1	(AT)			-4912
F285-18-W35A	1	(AT)			4912-
24-590		TERMINAL SET			
BPD3-18-W80	1				

4912 NA35* -602970

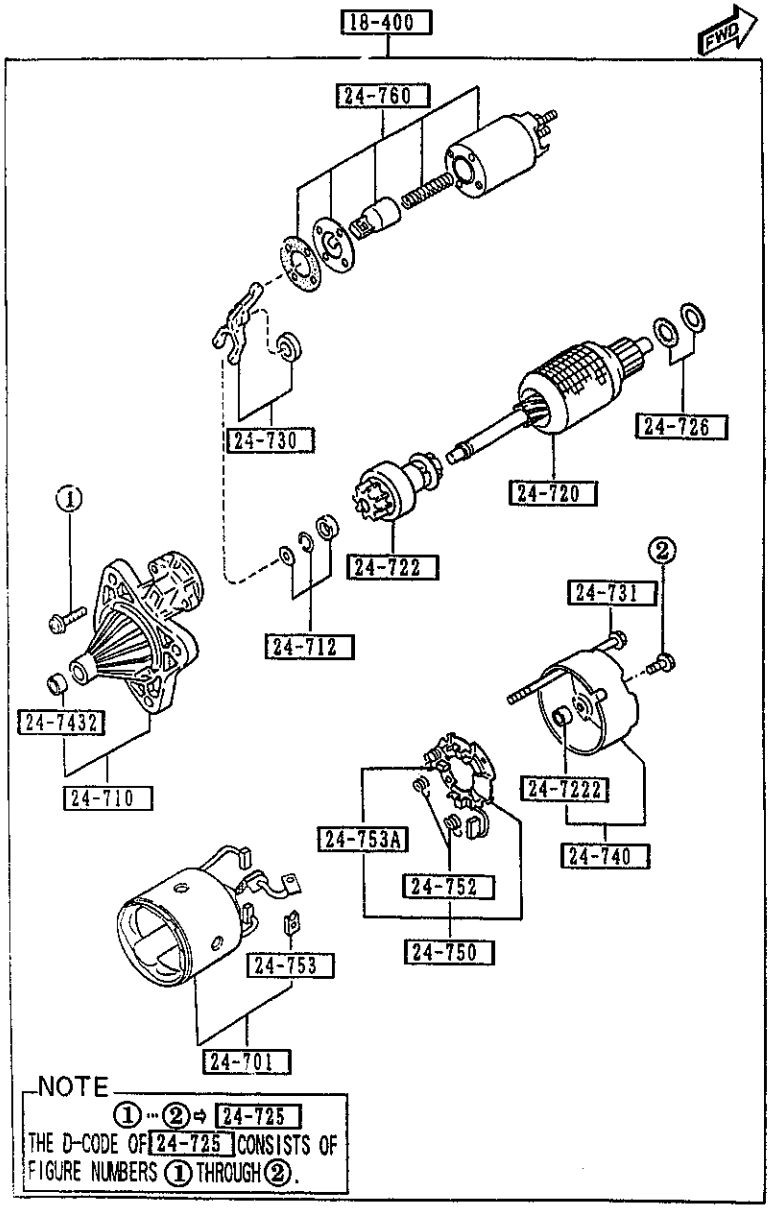

PART NO.	QTY	MODEL/RESTRICTION	MODEL/RESTRICTION	MODEL/RESTRICTION	FROM-TO
18-400		STARTER			
B61R-18-400A	1	NON ASBESTOS			
24-701		YOKE			
B61R-18-X65	1				
24-710		BRACKET,FRONT			
B61R-18-X00	1				
24-712		STOPPER SET			
E356-18-X30	1				
24-720		ARMATURE			
B6S8-18-X60	1	NON ASBESTOS			
24-722		CLUTCH,OVER RUNNING			
B630-18-X45	1				
24-7222		SLEEVE,BEARING-REAR			
E356-18-X81	1				
24-725		SCREW SET			
E356-18-X95	1	MITSUBISHI			
24-726		WASHER SET			
E356-18-X92	1				
24-730		LEVER			
E356-18-X05	1				
24-731		BOLT SET			
B630-18-X90	2				
24-740		BRACKET,REAR			
E356-18-X80	1				
24-7432		SLEEVE,BEARING-FRONT			
F210-18-X01	1				

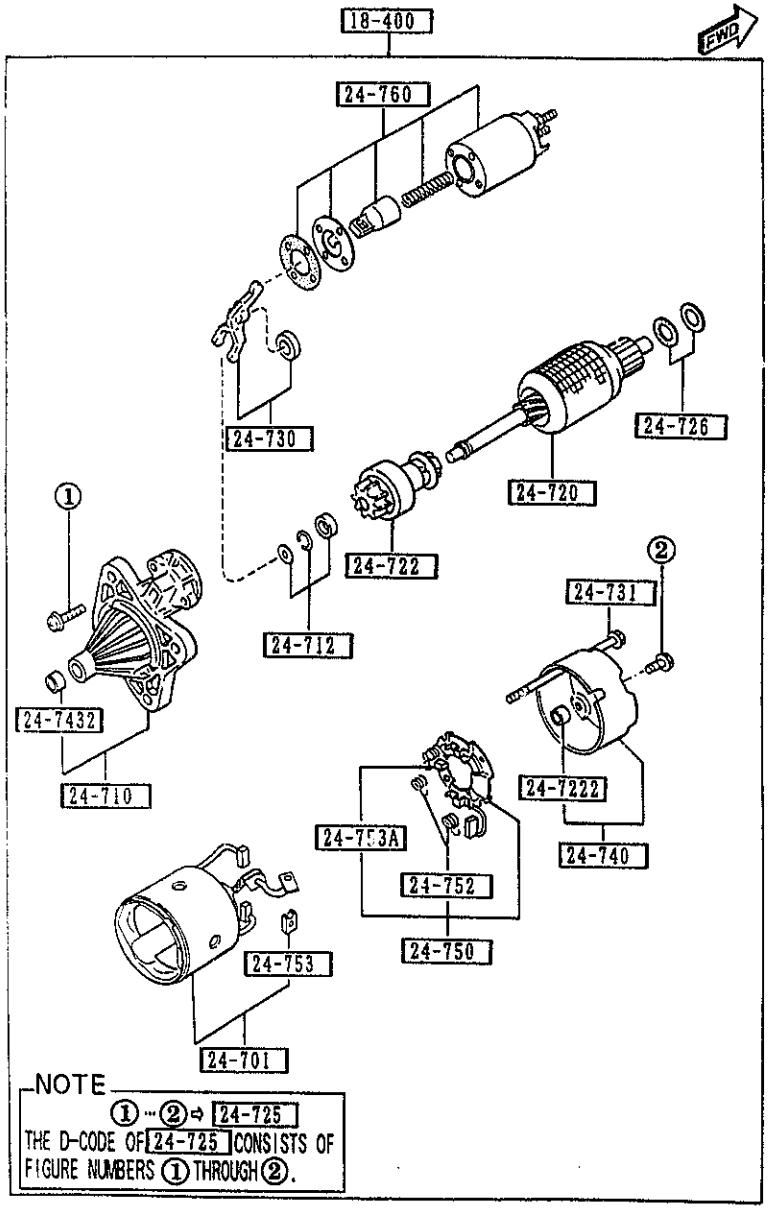

PART NO.	QTY	MODEL/RESTRICTION	MODEL/RESTRICTION	MODEL/RESTRICTION	FROM-TO
24-750		HOLDER,BRUSH			
B61R-18-X70	1				
24-752		SPRING,BRUSH			
0222-24-752A	4				
24-753		BRUSH,YOKE			
B63D-18-X66	2				
24-753A		BRUSH			
B660-18-X66	2				
24-760		SWITCH			
E356-18-X10	1				

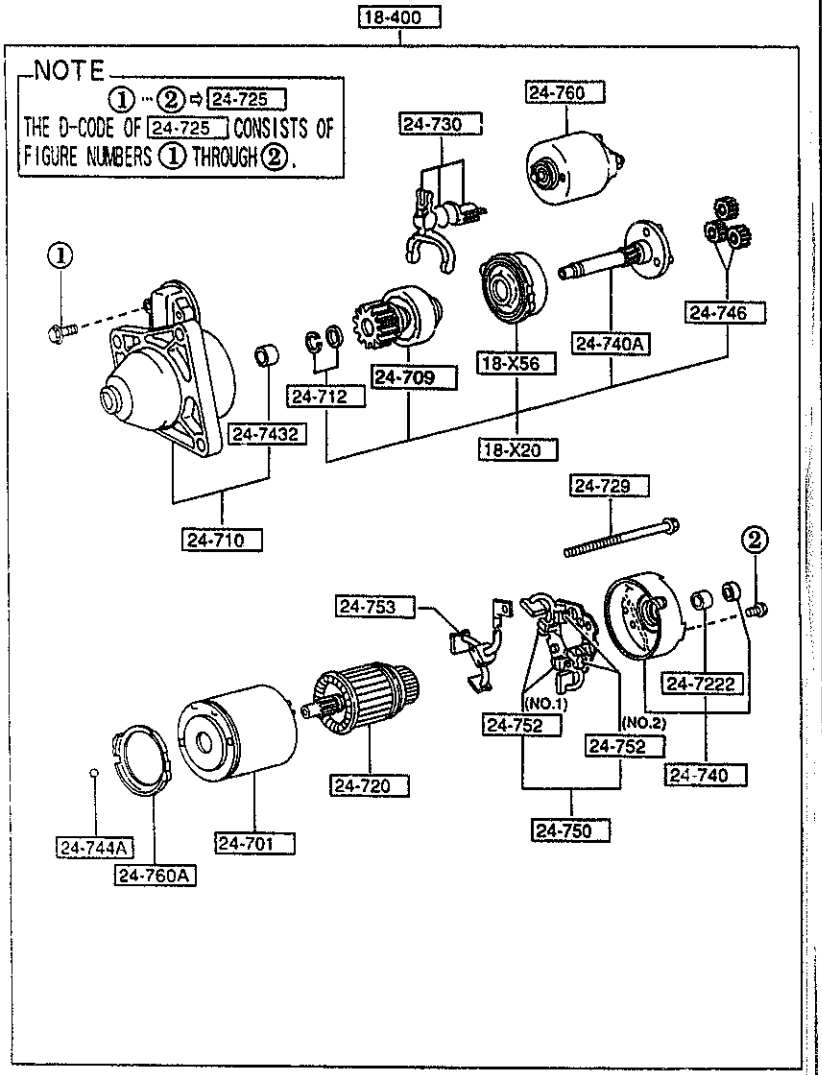

PART NO.	QTY	MODEL/RESTRICTION	MODEL/RESTRICTION	MODEL/RESTRICTION	FROM-TO
18-X20		SHAFT,PINION			
AM15-18-X20	1				
18-X56		GEAR,INTERNAL-STARTER			
F225-18-X56	1				
18-400		STARTER			
BPE9-18-400	1				
24-701		YOKE			
JF01-18-X65	1				
24-709		PINION			
*AM15-18-X25	1				
24-710		BRACKET,FRONT			
BPE9-18-X00	1				
24-712		STOPPER SET			
N326-18-X30	1	MITSUBISHI			
24-720		ARMATURE			
F214-18-X60A		NON ASBESTOS			
AN(AM15-18-X60)	1				-5C01
AM15-18-X60	1				5C01-
24-7222		SLEEVE,BEARING-REAR			
N326-18-X62A	1	MITSUBISHI			
24-725		SCREW SET			
E356-18-X95	1	MITSUBISHI			
24-729		BOLT			
N326-18-X91	2				
24-730		LEVER			
N326-18-X05	1				
24-740		BRACKET,REAR			

5C01 NA3** -706448

1840 A STARTER
(AT)

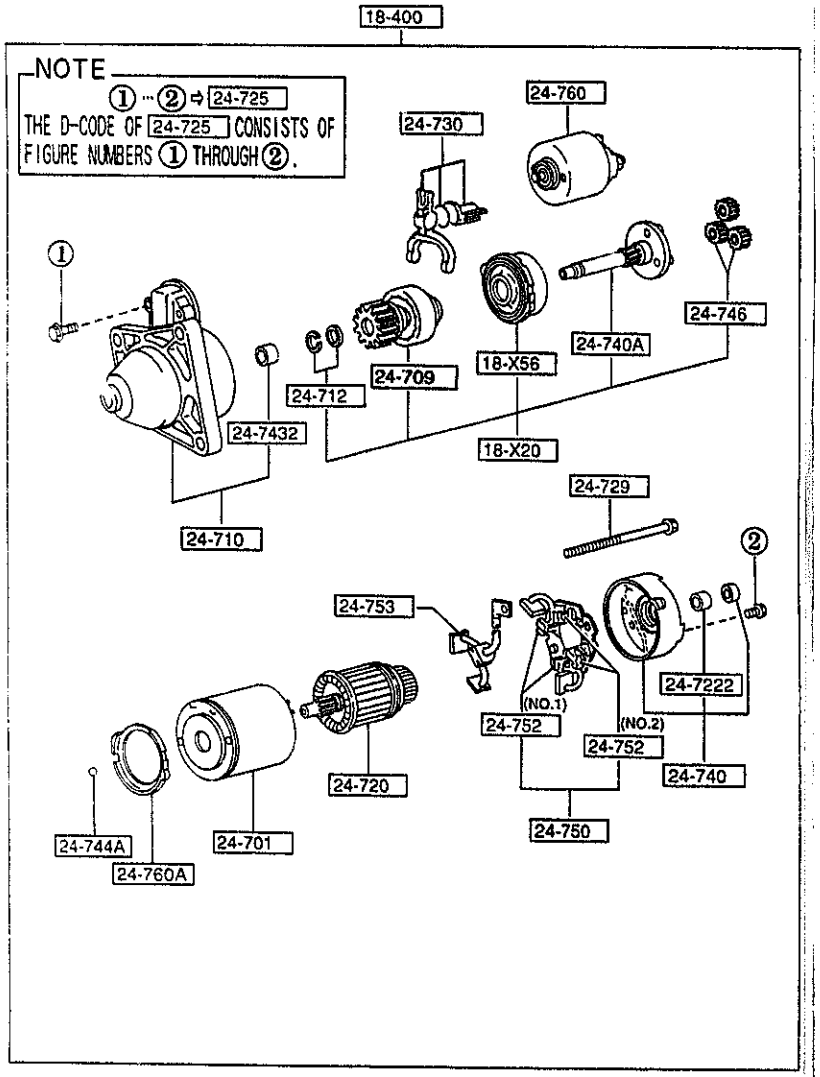

1840 A-2 * STARTER
(AT)

PART NO.	QTY	MODEL/RESTRICTION	MODEL/RESTRICTION	MODEL/RESTRICTION	FROM-TO
CONT'D					
JF01-18-X80A	1				
+---------+					
| 24-740A |		SHAFT			
+---------+					
F214-18-X40	1				
+---------+					
| 24-7432 |		SLEEVE,BEARING-FRONT			
+---------+					
E356-18-X01	1	MITSUBISHI			
+---------+					
| 24-744A |		BALL,STEEL			
+---------+					
N326-18-X93	1	MITSUBISHI			
+---------+					
| 24-746 |		GEAR			
+---------+					
N326-18-X57	3	MITSUBISHI			
+---------+					
| 24-750 |		HOLDER,BRUSH			
+---------+					
F214-18-X70	1				-6301
*F2D4-18-X70	1				6301-
+---------+					
| 24-752 |		SPRING,BRUSH			
+---------+					
N318-18-X71	2	(ILLUST. NO.1)			
N326-18-X71	2	(ILLUST. NO.2)			
+---------+					
| 24-753 |		BRUSH,YOKE			
+---------+					
F214-18-X66	1				-6301
*F2D4-18-X66	1				6301-
+---------+					
| 24-760 |		SWITCH			
+---------+					
E356-18-X10	1				-5C01
BPD4-18-X10	1				5C01-
+---------+					
| 24-760A |		GASKET			
+---------+					
N326-18-X87	1				

5C01 NA3** -706448
6301 NA3** -714662

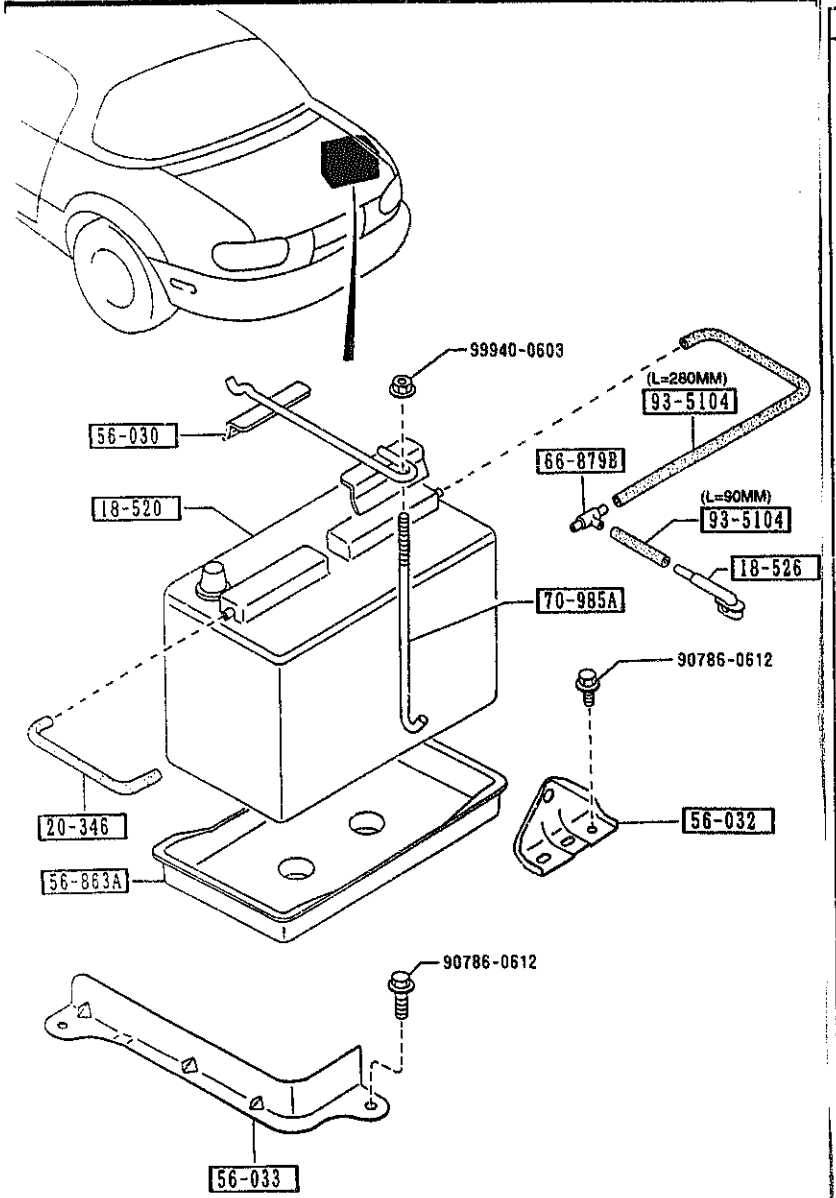

1850 -1 * BATTERY

PART NO.	QTY	MODEL/RESTRICTION	MODEL/RESTRICTION	MODEL/RESTRICTION	FROM-TO
18-520		BATTERY			
B6AC-18-520	1	S46A24L(S) PANASONIC			
18-526		CONNECTOR,TUBE-BATTERY			
B61P-18-526	1				
20-346		TUBE,VACUUM			
B61P-18-524	1				
56-030		CLAMP,BATTERY			
NA01-56-03XA	1				
56-032		BRACKET,BATTERY CLAMP			
NA01-56-032A	1				-4B01
AN(NA01-56-032B)					
NA01-56-032B	1				4B01-
56-033		BRACKET,STOPPER-BATTERY			
NA01-56-033A	1				-4B01
AN(NA01-56-033B)					
NA01-56-033B	1				4B01-
56-863A		TRAY,BATTERY			
B095-56-032	1				
66-879B		JOINT			
0813-66-879	1				
70-985A		BOLT,CLAMP			
0259-54-292A	1				
93-5104		HOSE			
99351-04999	1	L=1M CUT IT TO USE			

4B01 NA35* -606043

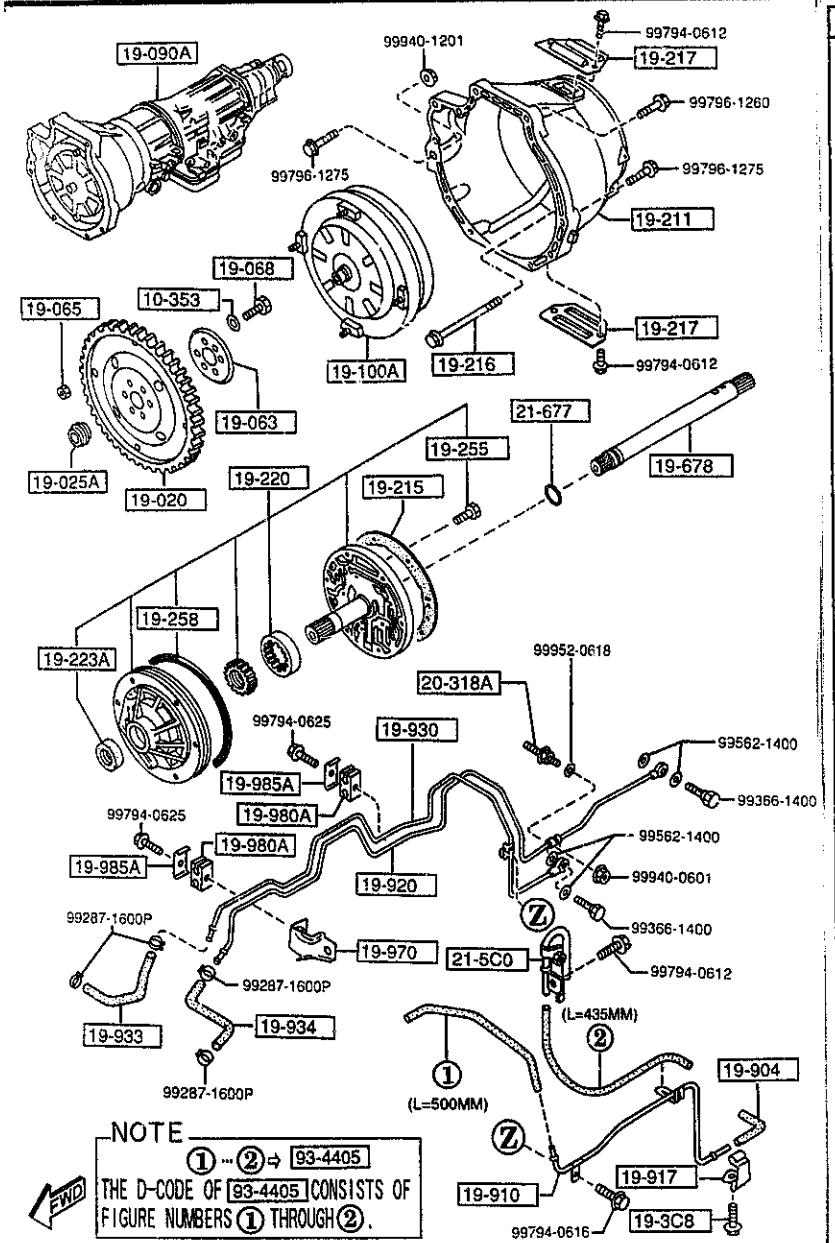

AUNA05

1910 -1 AUTOMATIC TRANSMISSION TORQUE CONVERTER, OIL PUMP & PIPINGS

PART NO.	QTY	MODEL/RESTRICTION	MODEL/RESTRICTION	MODEL/RESTRICTION	FROM-TO
10-353		WASHER,PLAIN			
0290-10-353	6				
19-020		PLATE,DRIVE			
BU55-19-020	1				
19-025A		ADAPTER,DRIVE PLATE			
FU60-19-025	1				
19-063		PLATE,BACKING			
FT31-19-063	1				
19-065		NUT			
FU51-19-065	4				
19-068		BOLT,LOCK			
FT31-19-064	6				
19-090A		T/MISSION CPT.			
N451-19-090C	1				
19-100A		CONVERTER,TORQUE			
BU55-19-100	1				
19-211		HOUSING,CONVERTER			
BU55-19-211	1				
19-215		GASKET,OIL PUMP			
BU46-19-215	1	NON ASBESTOS			
19-216		BOLT			
BU01-19-216	6				
19-217		COVER,BLIND			
BU55-19-217	2				
19-220		PUMP,OIL			
N451-19-220	1				
19-223A		SEAL,OIL			

1910 AUTOMATIC TRANSMISSION TORQUE CONVERTER, OIL PUMP & PIPINGS

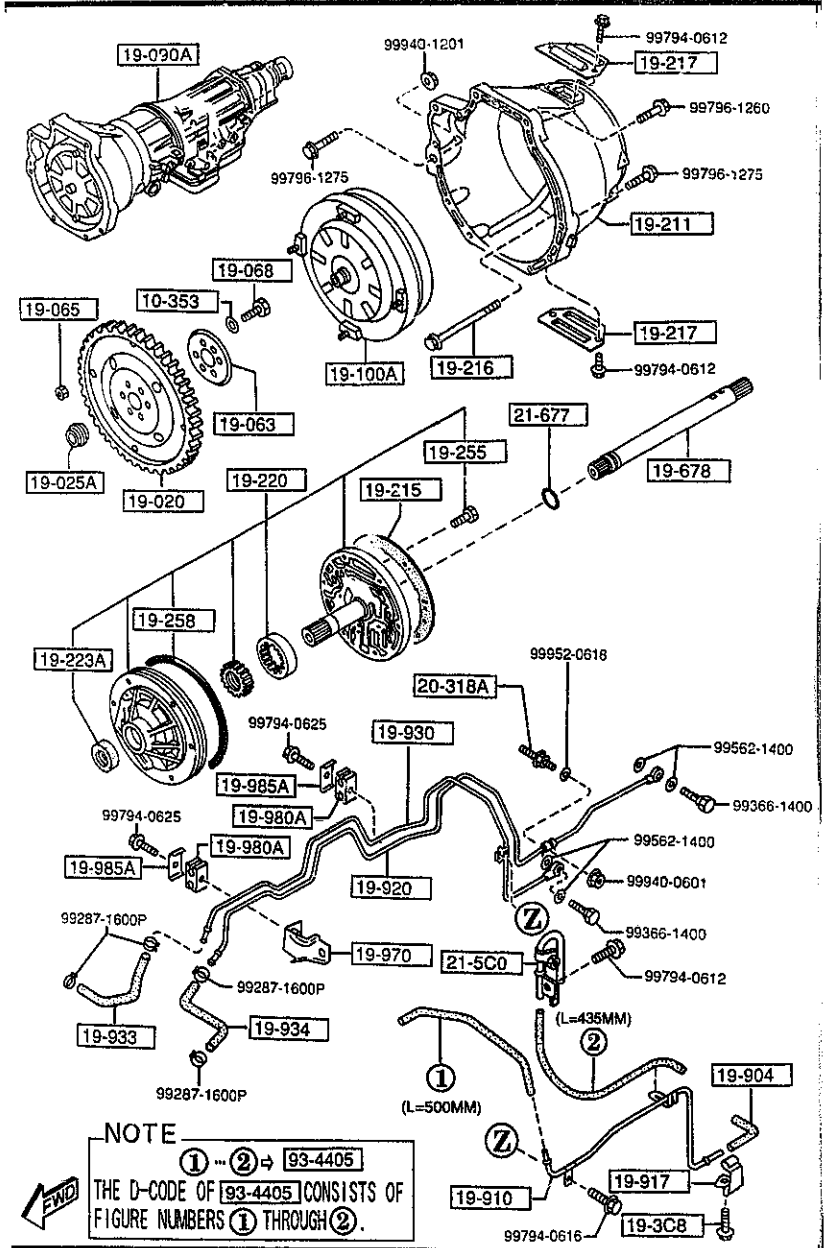

AUNA05

1910 -2 AUTOMATIC TRANSMISSION TORQUE CONVERTER, OIL PUMP & PIPINGS

PART NO.	QTY	MODEL/RESTRICTION	MODEL/RESTRICTION	MODEL/RESTRICTION	FROM-TO
CONT'D					
0338-19-223A	1	NOK			
19-255		BOLT			
0338-19-255	5				
19-258		SEAL,CUT RING			
0338-19-258	1				
19-3C8		BOLT,BAFFLE PLATE			
BU55-19-3C8	1	L=12MM			
19-678		SHAFT,INPUT			
N451-21-678	1				
19-904		HOSE,VACUUM			
0338-19-904A	1				
19-910		PIPE,VACUUM			
BU55-19-910A	1				
19-917		CLIP			
0436-19-917	1				
19-920		PIPE,OIL			
N451-19-920	1				
19-930		PIPE,OIL			
N452-19-930	1				
19-933		HOSE,OIL			
BU55-19-933A	1				
19-934		HOSE,OIL			
BU55-19-934A	1				
19-970		BRACKET			
BU55-19-970A	1				
19-980A		SUPPORT,OIL PIPE			
BU29-19-980	2				

1910 AUTOMATIC TRANSMISSION TORQUE CONVERTER, OIL PUMP & PIPINGS

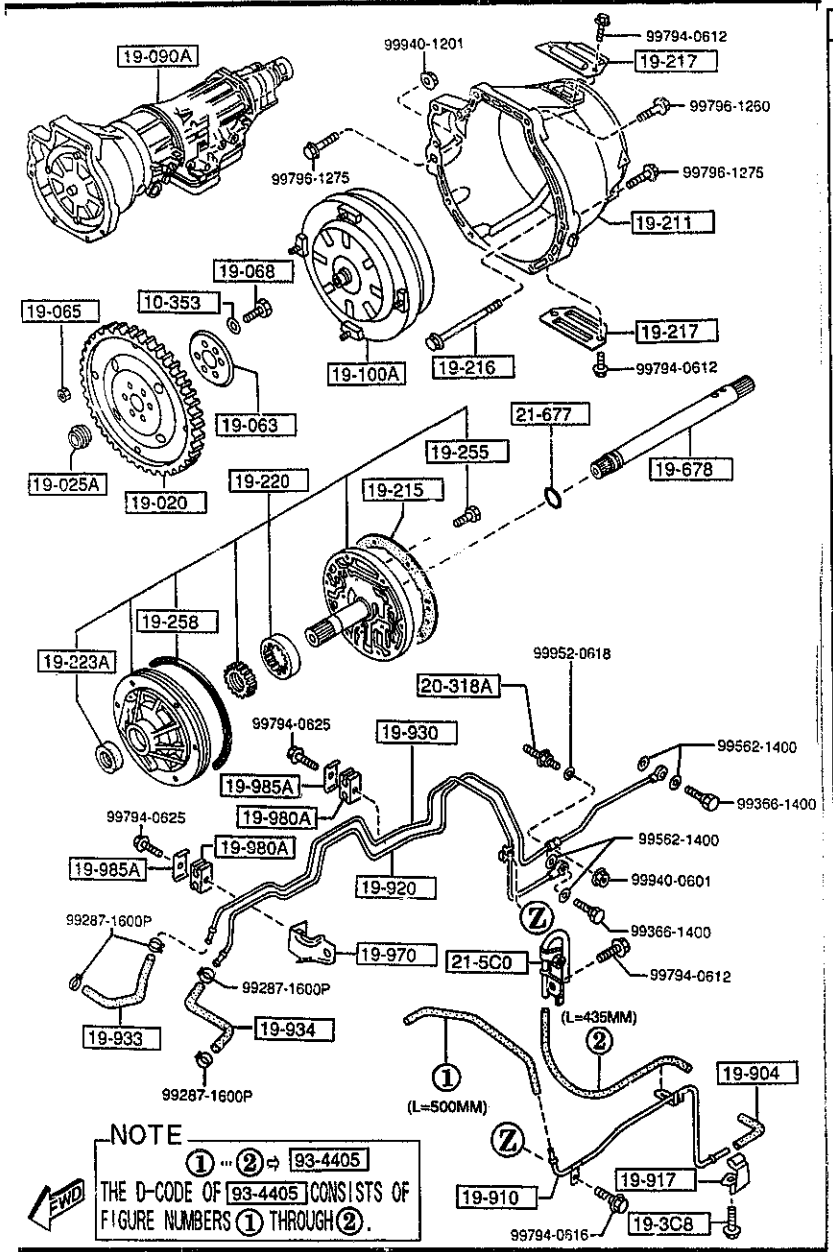

AUNA05

1910 -3 * AUTOMATIC TRANSMISSION TORQUE CONVERTER, OIL PUMP & PIPINGS

PART NO.	QTY	MODEL/RESTRICTION	MODEL/RESTRICTION	MODEL/RESTRICTION	FROM-TO
19-985A		CLIP,OIL PIPE			
BU29-19-985	2				
20-318A		BOLT			
BU27-19-838	1				
21-5C0		BREATHER			
N451-21-5C0	1				
21-677		RING,'O'			
BU01-21-677	1				
93-4405		HOSE			
99344-05150	1	L=15M CUT IT TO USE			

CAT. AUNA05-04 1997-07

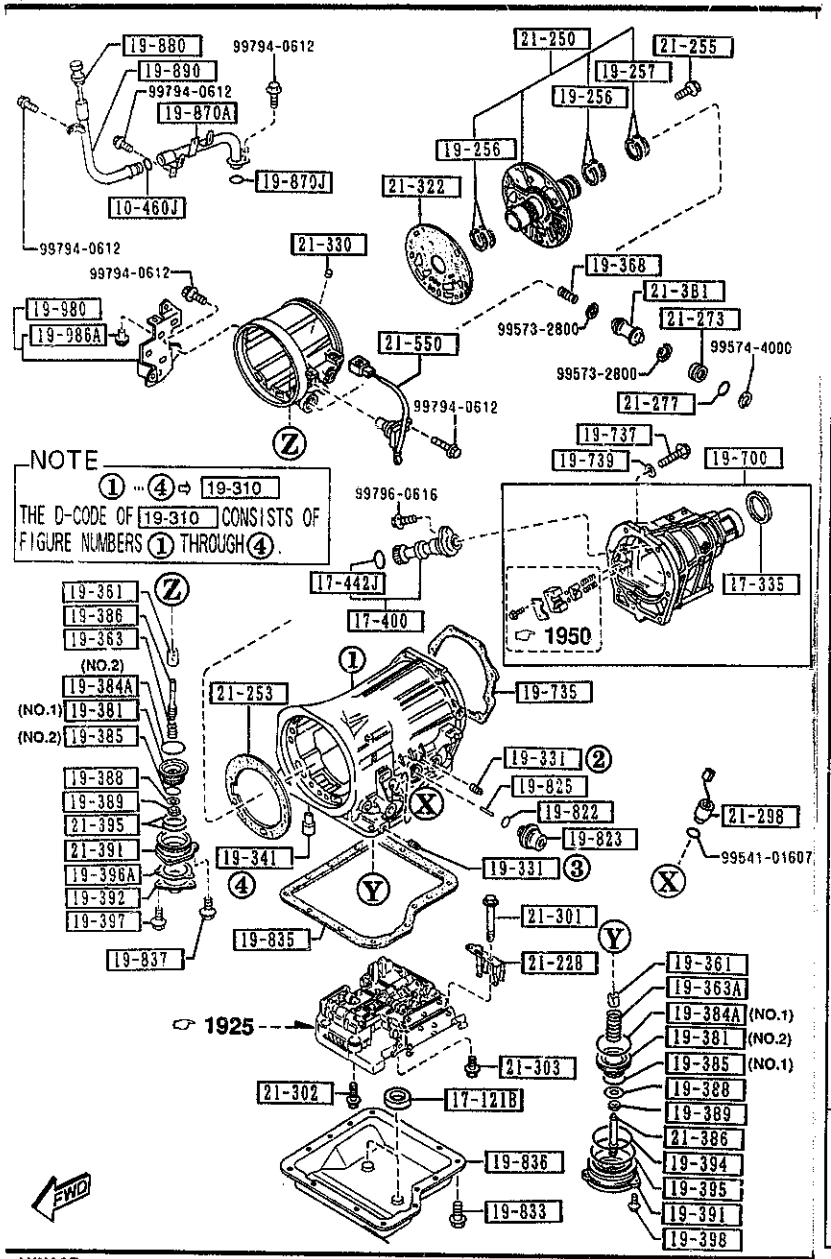

AUNA05

PART NO.	QTY	MODEL/RESTRICTION	MODEL/RESTRICTION	MODEL/RESTRICTION	FROM-TO
10-460J 99541-01201	1	RING,'O'			
17-121B F401-17-121	2	MAGNET			
17-335 M507-17-335A	1	SEAL,OIL			
17-400 N451-17-400	1	GEAR SET,DRIVEN-SPEED			
17-442J 1011-17-443	1	RING,'O'			
19-256 BU01-19-256	4	RING,SEAL			
19-257 BU01-19-257	2	RING,SEAL			
19-310 N451-19-310	1	CASE,T/MISSION			
19-331 0338-19-331A	2	PLUG,SQUARE HEAD			
19-341 0338-19-341	1	BOLT,ANCHOR END			
19-361 0338-19-361B	2	STRUT,BAND			
19-363 FT40-19-363	1	SPRING,PISTON RETURN			
19-363A BU10-19-363	1	SPRING,PISTON RETURN			
19-368 BU20-19-368	1	SPRING,CUSHION-PSTN. STEM			

CAT. AUNA05-04

1997-07

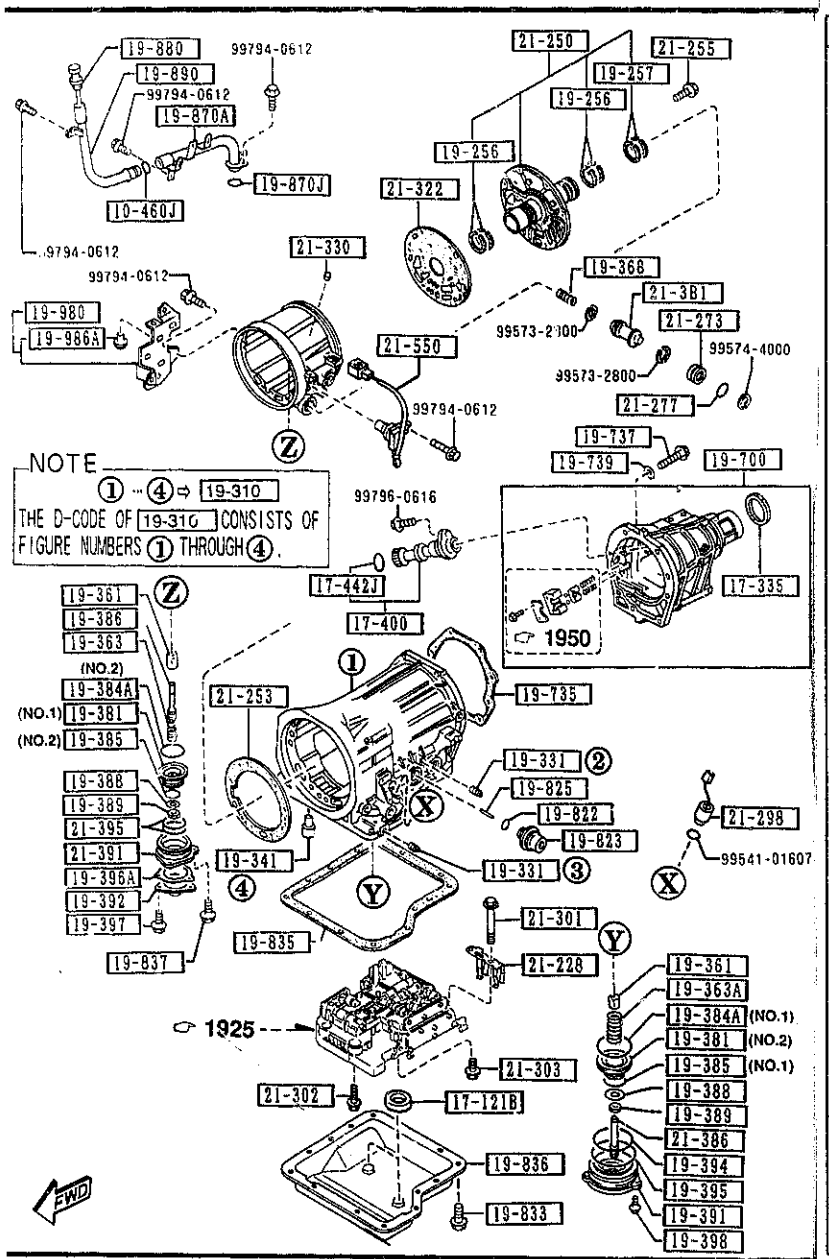

AUNA0J

PART NO.	QTY	MODEL/RESTRICTION	MODEL/RESTRICTION	MODEL/RESTRICTION	FROM-TO
19-381		PISTON,BAND SERVO			
BV03-19-381	1	(ILLUST. NO.1)			
N451-19-381	1	(ILLUST. NO.2)			
19-384A		SEAL,PISTON			
BU10-19-384	1	(ILLUST. NO.1)			
BU55-19-384	1	(ILLUST. NO.2)			
19-385		SEAL,PISTON			
BU05-19-385	1	D=49.4MM (ILLUST. NO.1)			
0842-19-385	1	D=36MM (ILLUST. NO.2)			
19-386		STEM,PISTON			
0338-19-386A	1				
19-388		WASHER,PLAIN			
0338-19-388A	2				
19-389		NUT			
0338-19-389	2				
19-391		RETAINER,SERVO			
N451-19-391	1				
19-392		COVER,SERVO			
1758-19-392A	1				
19-394		SEAL,LATHE CUT			
0842-19-394	1				
19-395		RING,'O'			
0338-19-395	1				
19-396A		GASKET			
BU46-19-3J4	1	NON ASBESTOS			
19-397		BOLT			
1758-19-397	3				

CAT. AUNA05-04

1997-07

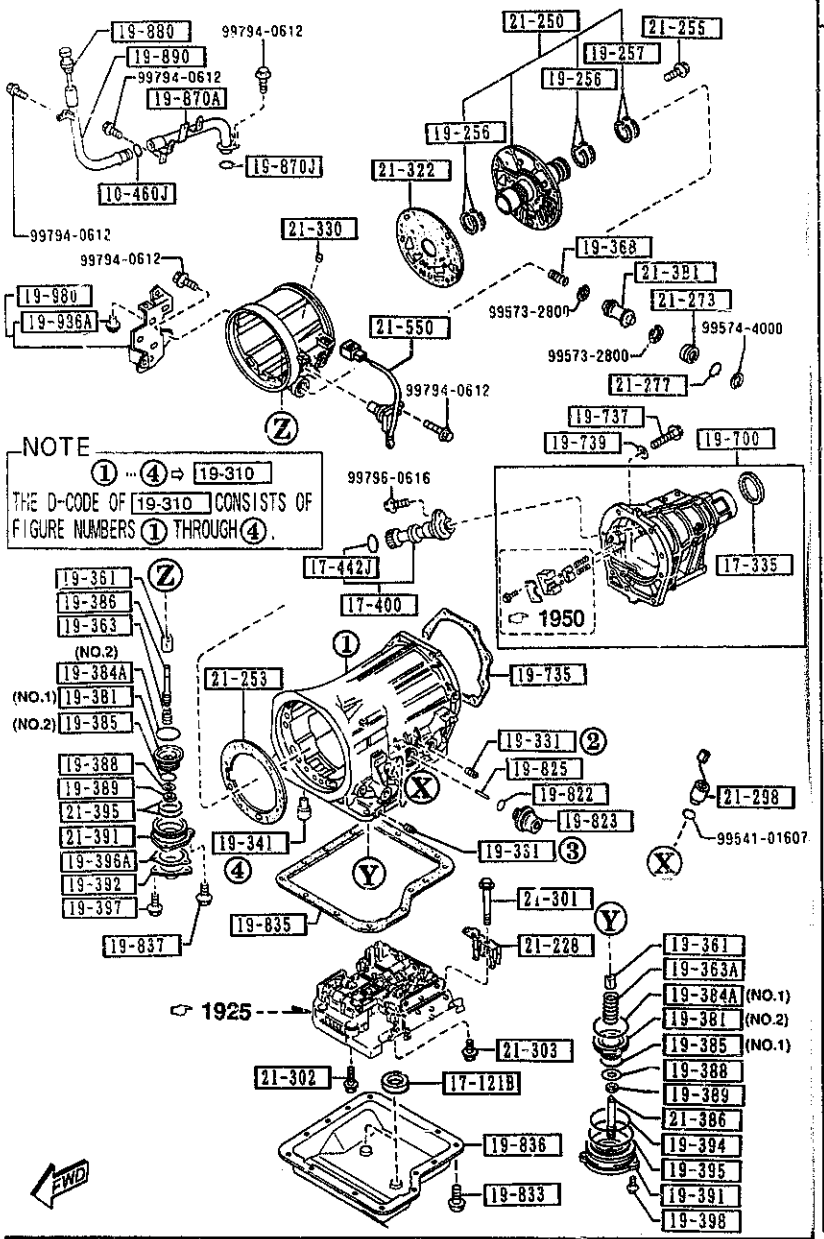

AUNA05

PART NO.	QTY	MODEL/RESTRICTION	MODEL/RESTRICTION	MODEL/RESTRICTION	FROM-TO
19-398		BOLT			
0338-19-398	3				
19-700		HOUSING,EXTENSION			
BUY2-19-7A0	1				
19-735		GASKET,EXTENSION			
BT28-19-735	1	NON ASBESTOS			
19-737		BOLT			
BV12-19-737	8				
19-739		WASHER,PLAIN			
BV40-19-739	8				
19-822		SEAL,'O'RING			
0338-19-822	1				
19-823		DIAPHRAGM,VACUUM			
BT07-19-823	1				
19-825		ROD,DIAPHRAGM			
BU55-19-825	1	L=29.75MM			
0338-19-825	1	L=30.0MM			
0338-19-826	1	L=31.0MM			
0338-19-827	1	L=30.5MM			
0338-19-828	1	L=29.0MM			
0338-19-829	1	L=29.5MM			
19-833		BOLT,CONTROL VALVE			
BU91-19-833	13	L=15MM			
19-835		GASKET,OIL PAN			
BT28-19-835	1	NON ASBESTOS			

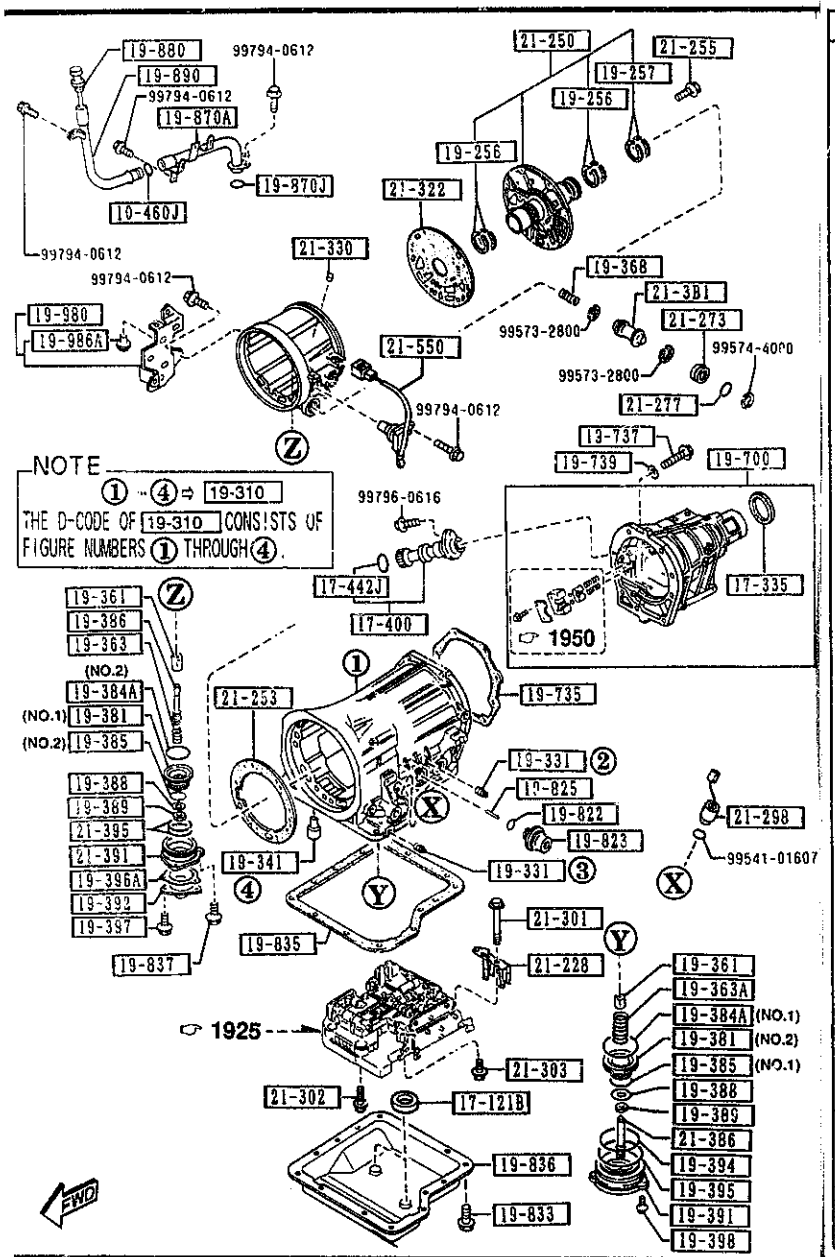

AUNA05

PART NO.	QTY	MODEL/RESTRICTION	MODEL/RESTRICTION	MODEL/RESTRICTION	FROM-TO
19-836 BV02-19-836	1	PAN,OIL			
19-837 0338-19-837	3	BOLT,OIL PAN			
19-870A BU55-19-870	1	TUBE,FILLER			
19-870J 99541-01601	1	RING,'O'			
19-880 BV55-19-880A	1	GAUGE,OIL LEVEL			
19-890 BU55-19-890	1	TUBE,OIL FILTER-UPPER			
19-980 BU55-19-980A	1	BRACKET			
19-986A BV01-19-986	1	BUSH,RUBBER			
21-228 BV01-21-228A	1	HOLDER,SOCKET			
21-250 BV01-21-250A	1	SUPPORT,DRUM			
21-253 BU46-21-2F3	1	GASKET,DRUM SUPPORT NON ASBESTOS			
21-255 BU01-21-255	5	BOLT			
21-273 BU01-21-273	1	PLUG,ACCUMULATOR			
21-277		RING,'O'			

CAT. AUNA05-04

1997-07

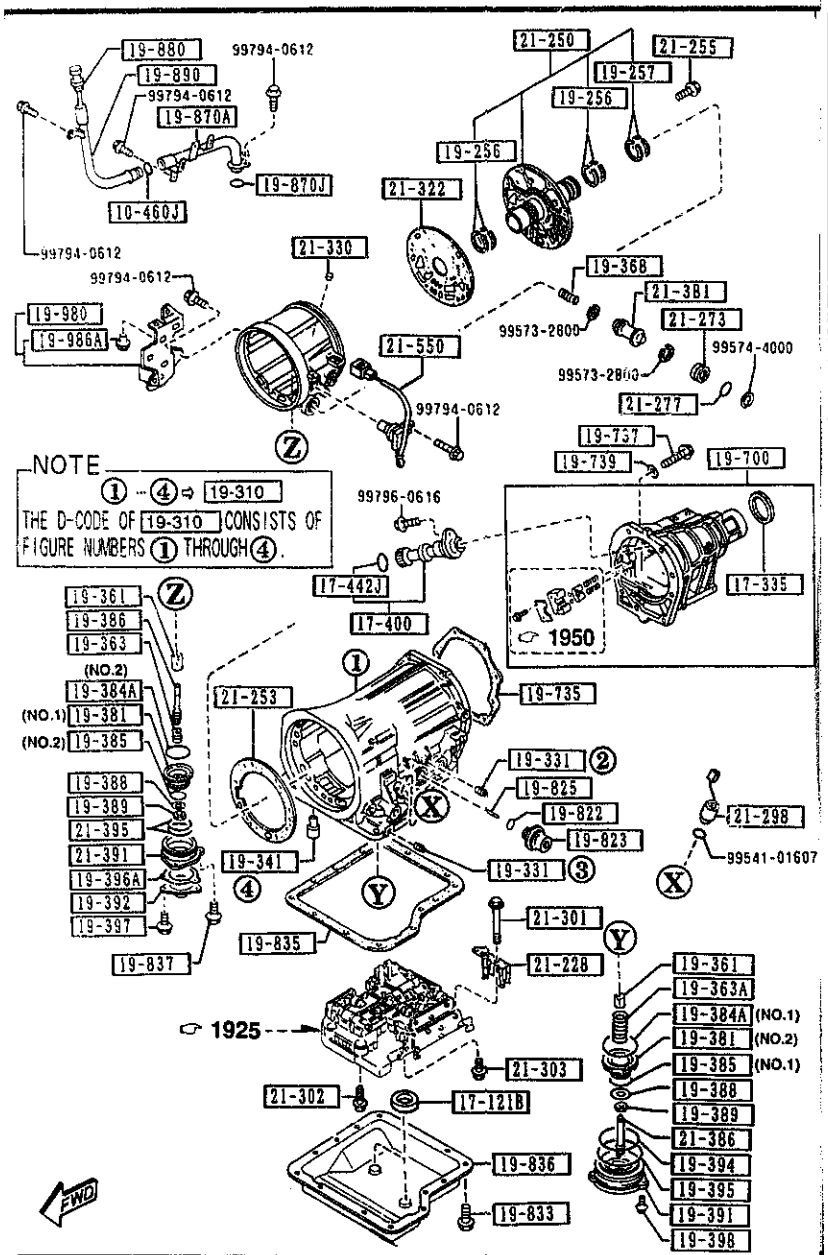

AUNA05

PART NO.	QTY	MODEL/RESTRICTION	MODEL/RESTRICTION	MODEL/RESTRICTION	FROM-TO
CONT'D					
BU01-21-277	1				
+----------+					
| 21-298 |		COUPLER,SOLENOID VALVE			
+----------+					
BV09-21-2K0	1				
+----------+					
| 21-381 |		PISTON,ACCUMULATOR			
+----------+					
N451-21-381	1				
+----------+					
| 21-301 |		BOLT,CONTROL VALVE			
+----------+					
BV01-21-301	2				
+----------+					
| 21-302 |		BOLT,CONTROL VALVE			
+----------+					
BV01-21-302	4				
+----------+					
| 21-303 |		BOLT,CONTROL VALVE			
+----------+					
BV01-21-303	1				
+----------+					
| 21-322 |		GASKET,O/DRIVE CASE			
+----------+					
BU46-21-3C2	1				
+----------+					
| 21-330 |		VALVE,ONE WAY			
+----------+					
BV01-21-330	1				
+----------+					
| 21-386 |		STEM,PISTON BAND			
+----------+					
BU01-21-386	1				
+----------+					
| 21-391 |		RETAINER,SERVO			
+----------+					
BV02-21-391	1				
+----------+					
| 21-395 |		RING,'O'			
+----------+					
BU01-21-395	2				
+----------+					
| 21-550 |		GENERATOR,PULSE			
+----------+					
N451-21-550A	1				

CAT. AUNA05-04

1997-07

NOTE
① ··· ② ⇨ 19-750
THE D-CODE OF 19-750 CONSISTS OF FIGURE NUMBERS ① THROUGH ②.

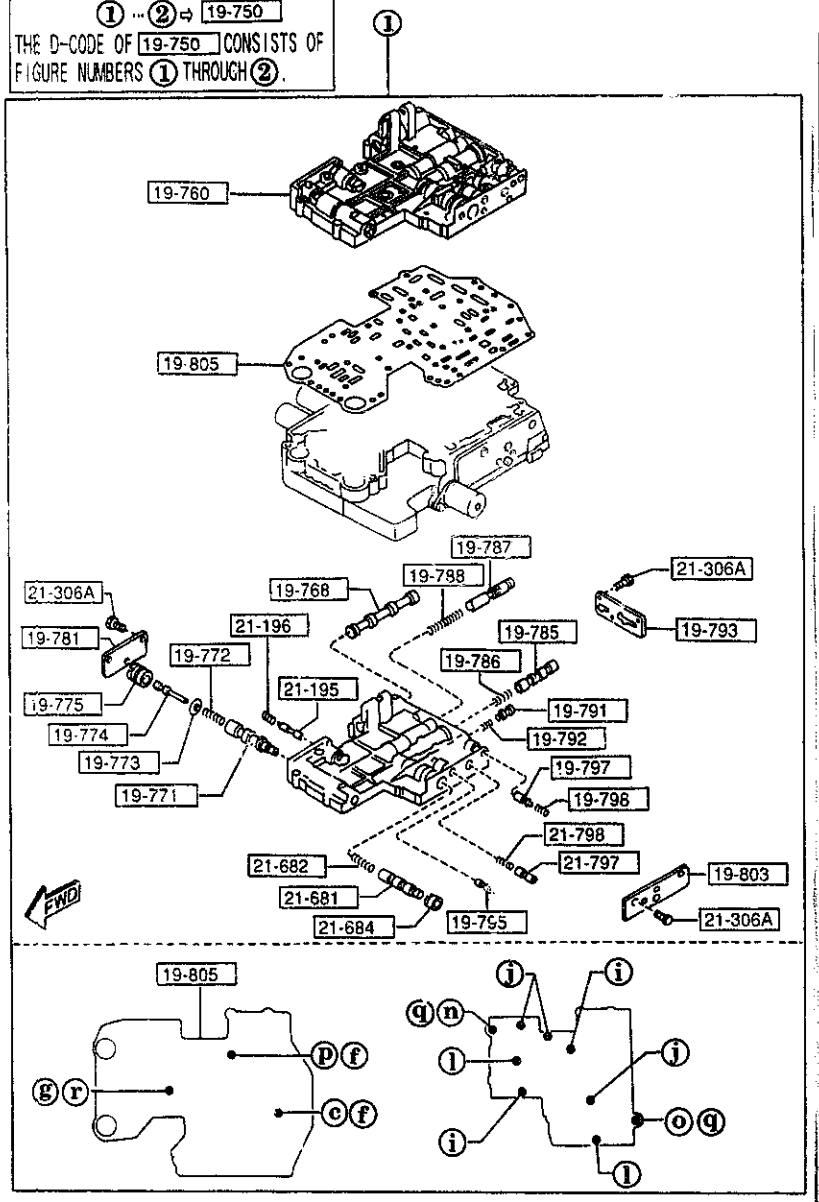

AUNA05

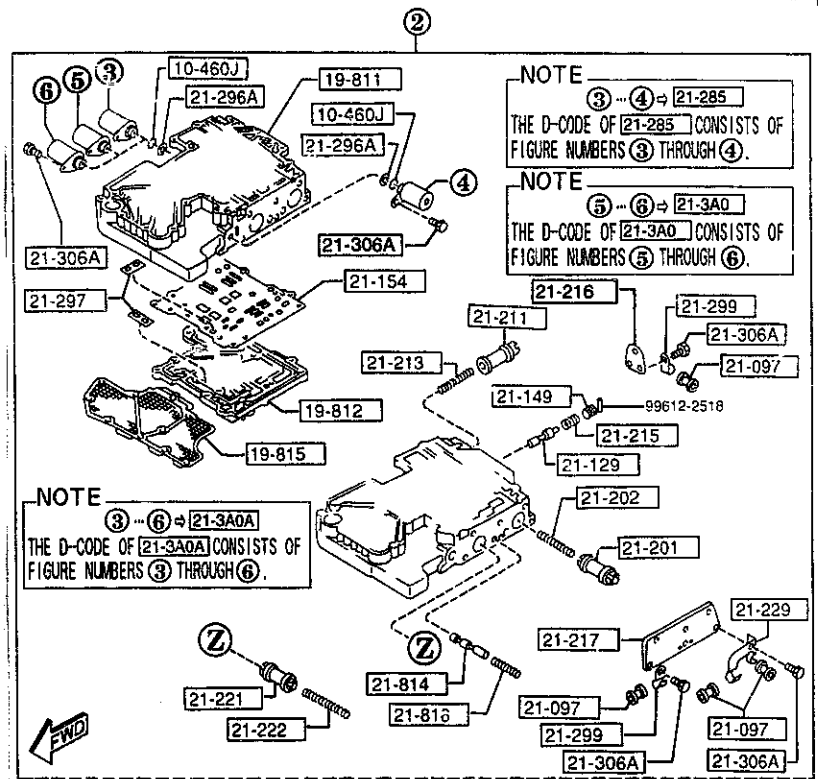

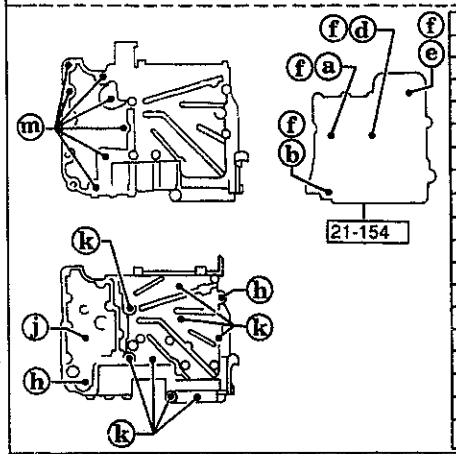

a	D	19-8A2	D=1.0MM
b	D	19-8A3	D=1.1MM
c	D	19-8A4	D=1.2MM
d	D	19-8B2	D=1.5MM
e	D	19-8B4	D=2.2MM
f	D, L	19-808	D=4.7MM,L=15.5MM
g	D, L	19-814	D=5.6MM,L=26.8MM
h		19-819	
i	L	21-261	L=30MM
j	L	21-262	L=35MM
k	L	21-263	L=25MM
l	L	21-264	L=40MM
m	L	21-265	L=12MM
n	L	21-302	L=59MM
o	L	21-305	L=82MM
p	L	21-333	
q	D, d	21-446	D=12.5MM,d=6.4MM
r		99611-2000	

AUNA05

NOTE
① ... ② ⇨ 19-750
THE D-CODE OF 19-750 CONSISTS OF FIGURE NUMBERS ① THROUGH ②.

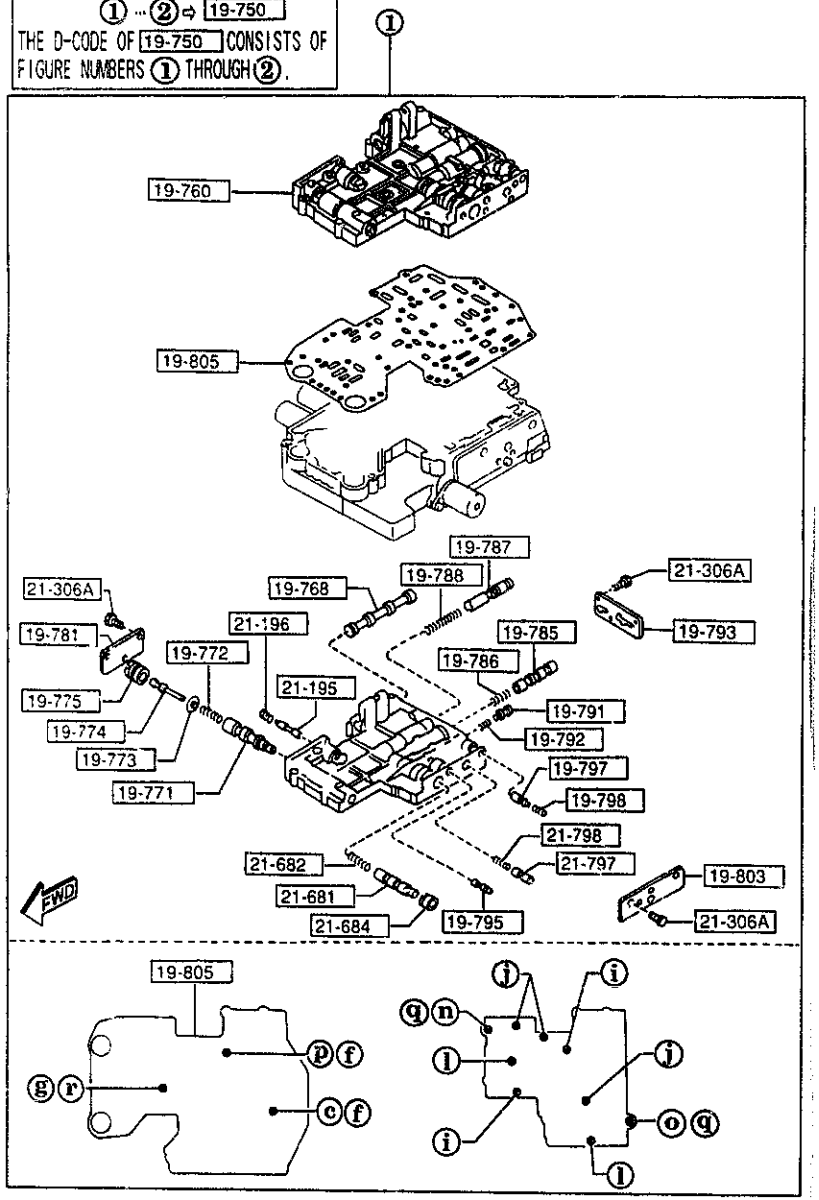

PART NO.	QTY	MODEL/RESTRICTION	MODEL/RESTRICTION	MODEL/RESTRICTION	FROM-TO
10-460J 99541-00707	4	RING,'O'			-6110
19-750 N451-19-750	1	VALVE,CONTROL			
19-760 BV01-19-760F	1	BODY,CONTROL VALVE-UP			
19-768 BU91-19-768	1	VALVE,MANUAL			
19-771 BV01-19-771	1	VALVE,REGULATOR			
19-772 0338-19-772	1	SPRING,REGULATOR			
19-773 0338-19-773	1	SEAT,REGULATOR SPRING			
19-774 N451-19-774	1	PLUG,REGULATOR			
19-775 N451-19-775	1	SLEEVE,REGULATOR PLUG			
19-781 1758-19-781	1	PLATE,SIDE'D'			
19-785 BV01-19-785	1	VALVE,1-2 SHIFT			
19-786 BV11-19-527	1	SPRING,1-2 SHIFT			
19-787 N451-19-787	1	VALVE,2-3 SHIFT			
19-788 N451-19-788	1	SPRING,2-3 SHIFT			

6110 NA3** -709212

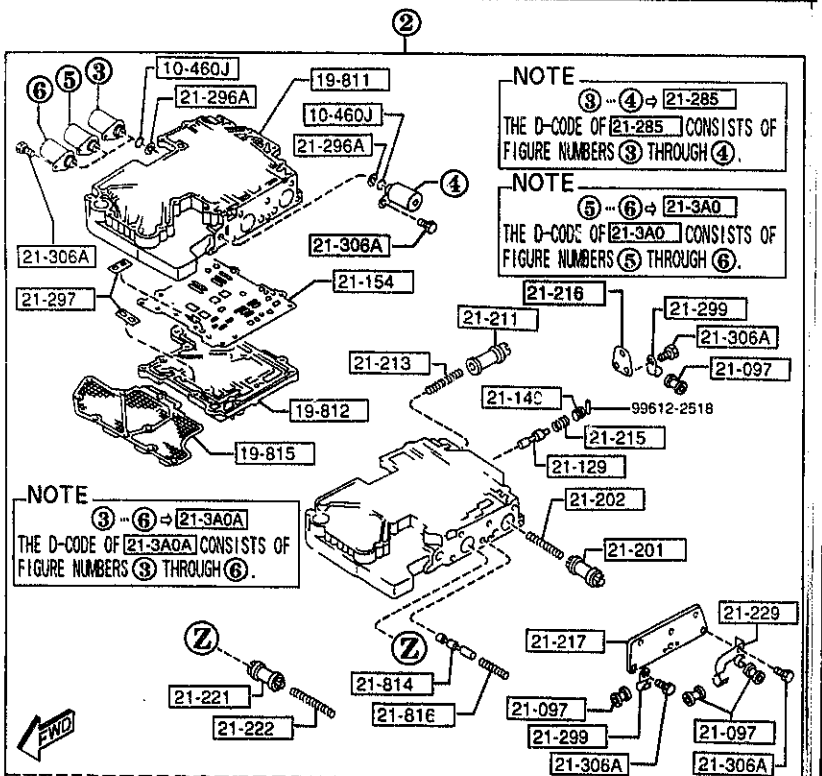

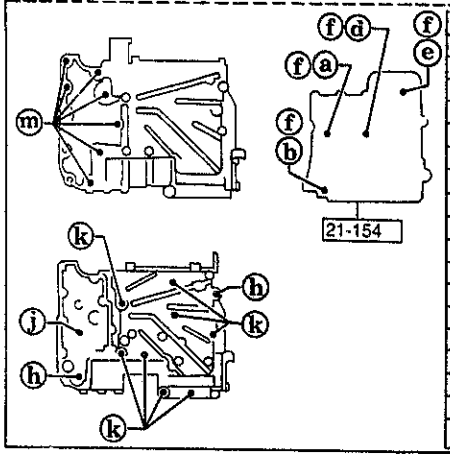

a	D	19-8A2	D=1.0MM
b	D	19-8A3	D=1.1MM
c	D	19-8A4	D=1.2MM
d	D	19-8B2	D=1.5MM
e	D	19-8B4	D=2.2MM
f	D L	19-808	D=4.7MM,L=15.5MM
g	D L	19-814	D=5.6MM,L=26.8MM
h		19-819	
i	L	21-261	L=30MM
j	L	21-262	L=35MM
k	L	21-263	L=25MM
l	L	21-264	L=40MM
m	L	21-265	L=12MM
n	L	21-302	L=59MM
o	L	21-305	L=82MM
p		21-333	
q	D d	21-446	D=12.5MM,d=6.4MM
r		99611-2000	

PART NO.	QTY	MODEL/RESTRICTION	MODEL/RESTRICTION	MODEL/RESTRICTION	FROM-TO
19-791 0338-19-791A	1	VALVE,MODIFIER			
19-792 BV01-19-792	1	SPRING,MODIFIER			
19-793 BV01-19-793	1	PLATE,SIDE'A'			
19-795 N451-19-795	1	VALVE,THROTTLE			
19-797 BV01-19-797A	1	VALVE,THROTTLE BACK-UP			
19-798 N451-19-798	1	SPRING,THROTTLE BACK-UP			
19-8A2 BV01-19-8A2	1	VALVE,ORIFICE CHECK			
19-8A3 BV01-19-8A3	1	VALVE,ORIFICE CHECK			
19-8A4 BV01-19-8A4	1	VALVE,ORIFICE CHECK			
19-8B2 BV01-19-8B2	1	VALVE,ORIFICE CHECK			
19-8B4 BV01-19-8B4	1	VALVE,ORIFICE CHECK			
19-803 BV01-19-803	1	PLATE,SIDE'B'			
19-805 BV17-19-805	1	PLATE,SEPARATOR			
19-808 0338-19-808	6	SPRING			

NOTE
① ⋯ ② ⇨ 19-750
THE D-CODE OF 19-750 CONSISTS OF FIGURE NUMBERS ① THROUGH ②.

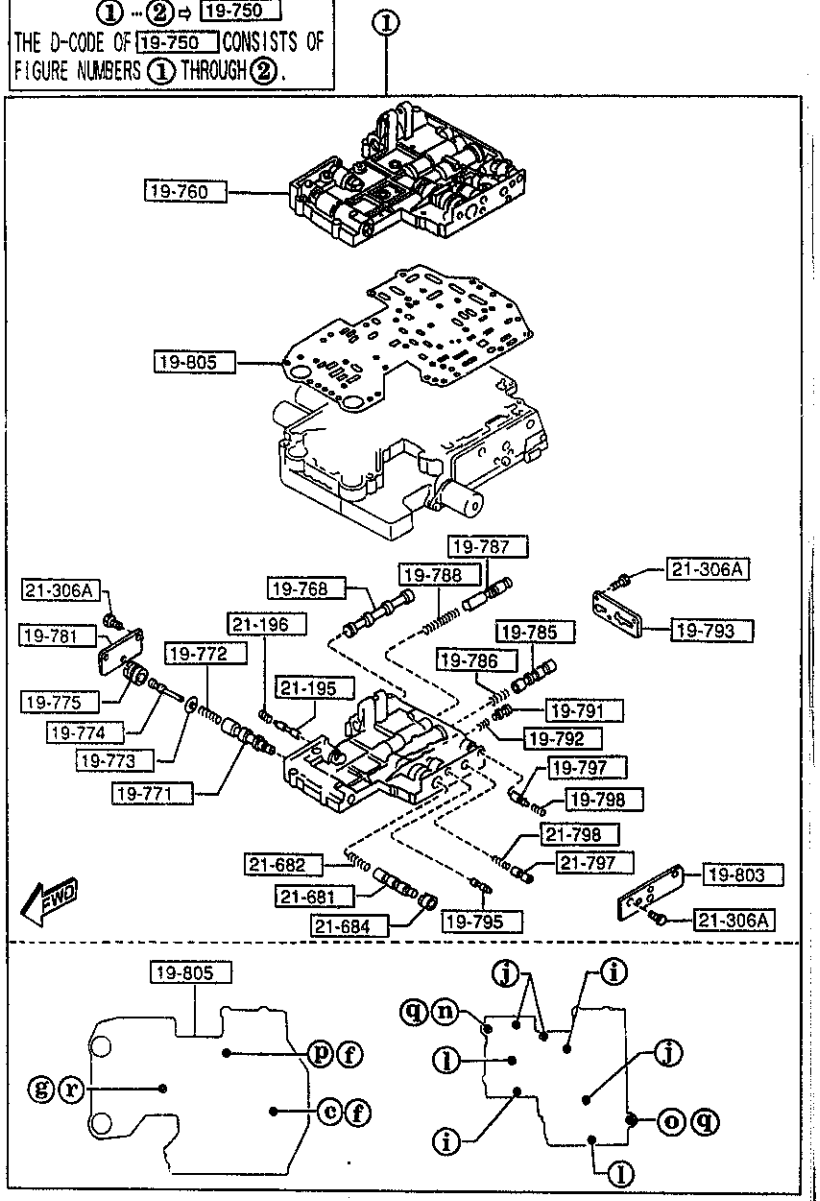

AUNA05

PART NO.	QTY	MODEL/RESTRICTION	MODEL/RESTRICTION	MODEL/RESTRICTION	FROM-TO
19-811 BV02-19-811C	1	BODY,VALVE LWR			
19-812 BV01-19-812A	1	COVER,VALVE BODY			
19-814 0338-19-814	1	SPRING			
19-815 BV01-19-815	1	STRAINER,OIL			
19-819 BV01-19-819	2	NUT			
21-097 FU01-21-097	4	PROTECTOR			
21-129 BV01-21-129	1	VALVE,1-2 REDUCING			
21-149 BV01-21-149A	1	PLUG,STOPPER			
21-154 N451-21-154	1	PLATE,SEPARATOR			
21-195 BV01-21-195	1	VALVE,REDUCING			
21-196 BV01-21-196	1	SPRING,REDUCING			
21-201 N451-21-201	1	PISTON,ACCUM			
21-202 BV06-21-202	1	SPRING,ACCUM N-R			
21-211 N451-21-211	1	PISTON,N/D ACCUM			

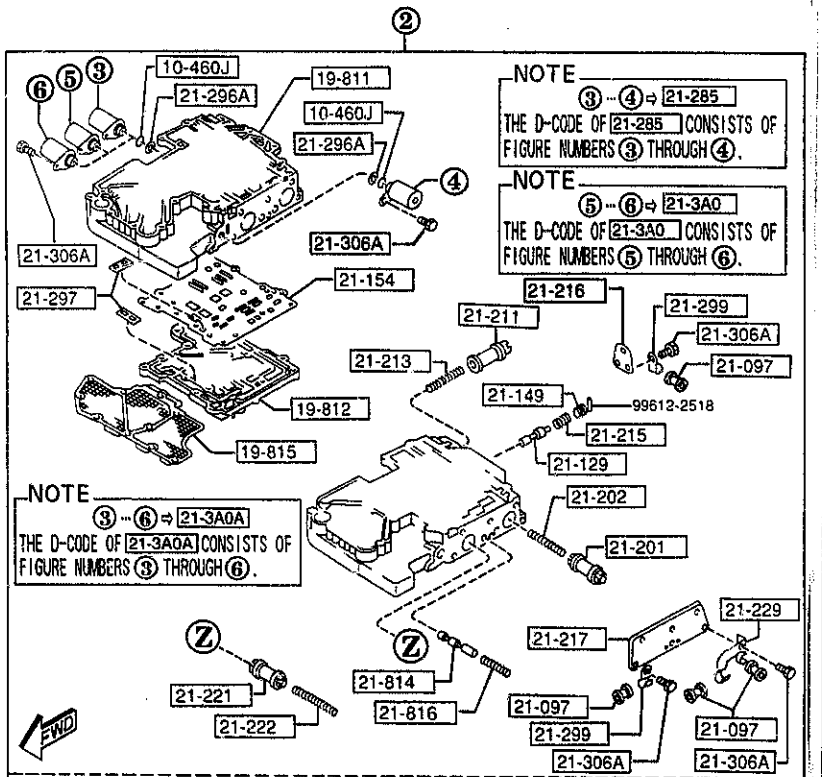

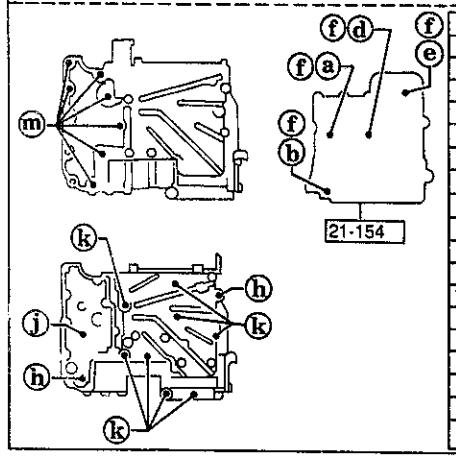

a		19-8A2	D=1.0MM
b		19-8A3	D=1.1MM
c		19-8A4	D=1.2MM
d		19-8B2	D=1.5MM
e		19-8B4	D=2.2MM
f		19-808	D=4.7MM,L=15.5MM
g		19-814	D=5.6MM,L=26.8MM
h		19-819	
i		21-261	L=30MM
j		21-262	L=35MM
k		21-263	L=25MM
l		21-264	L=40MM
m		21-265	L=12MM
n		21-302	L=59MM
o		21-305	L=82MM
p		21-333	
q		21-446	D=12.5MM,d=6.4MM
r		99611-2000	

AUNA05

PART NO.	QTY	MODEL/RESTRICTION	MODEL/RESTRICTION	MODEL/RESTRICTION	FROM-TO
21-213		SPRING,N/D ACCUM			
BV01-21-213	1				
21-215		SPRING,BY-PASS			
BV02-21-215	1				
21-216		PLATE'E',SIDE			
BV01-21-216	1				
21-217		PLATE'F',SIDE			
BV01-21-217	1				
21-221		PISTON,1/2 ACCUM			
N451-21-221	1				
21-222		SPRING,ACCUM 1-2			
BV02-21-222B	1				
21-229		CLIP			
BV01-21-229A	1				
21-261		BOLT			
N451-21-261	2				
21-262		BOLT			
N451-21-262	4				
21-263		BOLT			
N451-21-263	8				
21-264		BOLT			
N451-21-264	2				
21-265		BOLT			
FU01-21-265C	7				
21-285		VALVE,SOLENOID			
BV01-21-280A	1				5201-
21-296A		STRAINER,OIL			
BV01-21-296	4				

5201 NA35* -614193

CAT. AUNA05-04

1997-07

NOTE
① ··· ② ⇨ 19-750
THE D-CODE OF 19-750 CONSISTS OF FIGURE NUMBERS ① THROUGH ②.

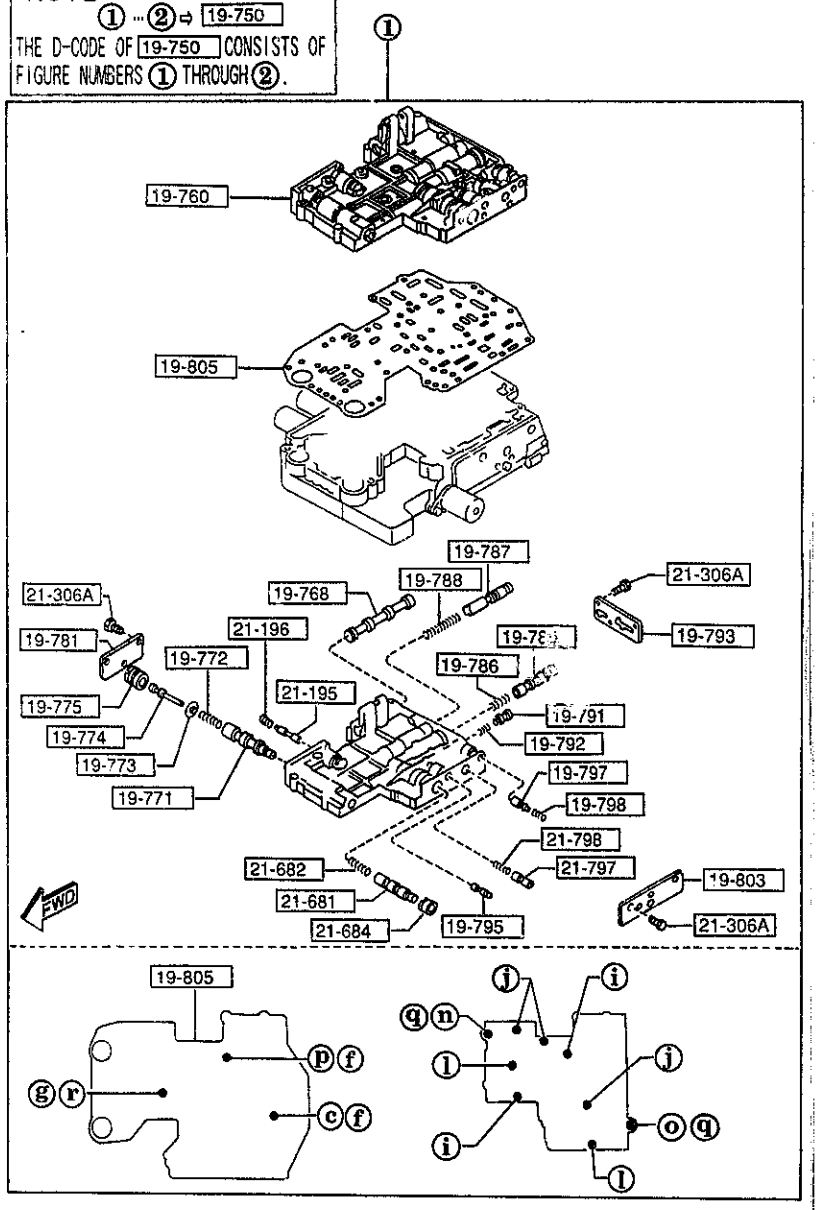

PART NO.	QTY	MODEL/RESTRICTION	MODEL/RESTRICTION	MODEL/RESTRICTION	FROM-TO
21-297		STRAINER,INNER			
BV01-21-297	2				
21-299		CLIP			
BV01-21-299	2				
21-3A0		SOLENOID			
BV02-21-3A0A	1				5201-
21-3A0A		VALVE,SOLENOID NO1			
BV01-21-3A0A	1				-5201
21-302		BOLT,CONTROL VALVE			
BV02-21-302	1				
21-305		BOLT			
BV01-21-305B	1				
21-306A		BOLT			
BV01-21-306	22				
21-333		VALVE,ONE WAY			
BV01-21-333	1				
21-446		WASHER,DISHED			
BV01-21-446	2				
21-681		VALVE,SHIFT 3-4			
BV01-21-681	1				
21-682		SPRING,3-4 SHIFT			
BV01-21-682	1				
21-684		VALVE,3-4 SHIFT-COAST			
BV01-21-684	1				
21-797		VALVE,CONTROL BACK UP			
BV01-21-797	1				
21-798		SPRING,BACK UP			
BV01-21-798	1				

5201 NA35* -614193

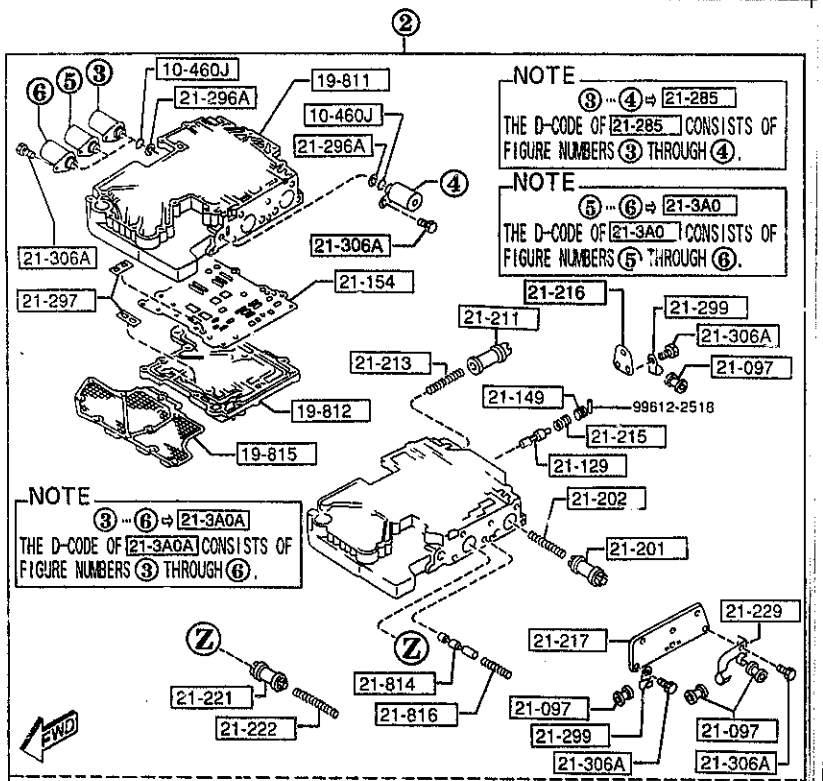

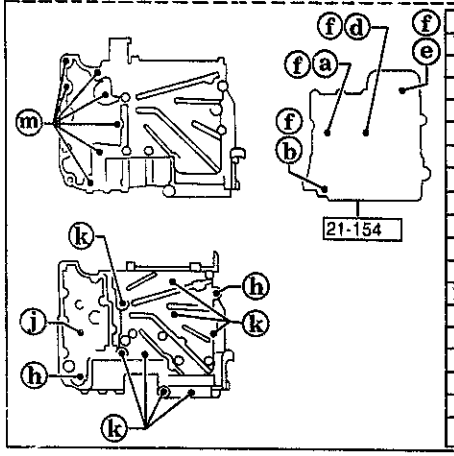

a		19-8A2	D=1.0MM
b		19-8A3	D=1.1MM
c		19-8A4	D=1.2MM
d		19-8B2	D=1.5MM
e		19-8B4	D=2.2MM
f		19-808	D=4.7MM,L=15.5MM
g		19-814	D=5.6MM,L=26.8MM
h		19-819	
i		21-261	L=30MM
j		21-262	L=35MM
k		21-263	L=25MM
l		21-264	L=40MM
m		21-265	L=12MM
n		21-302	L=59MM
o		21-305	L=82MM
p		21-333	
q		21-446	D=12.5MM,d=6.4MM
r		99611-2000	

1925 -6 * AUTOMATIC TRANSMISSION CONTROL VALVE

PART NO.	QTY	MODEL/RESTRICTION	MODEL/RESTRICTION	MODEL/RESTRICTION	FROM-TO
21-814		SPRING,3-2 TIMING			
BV01-21-814	1				
21-816		SPRING,3-2 TIMING			
BV01-21-816	1				

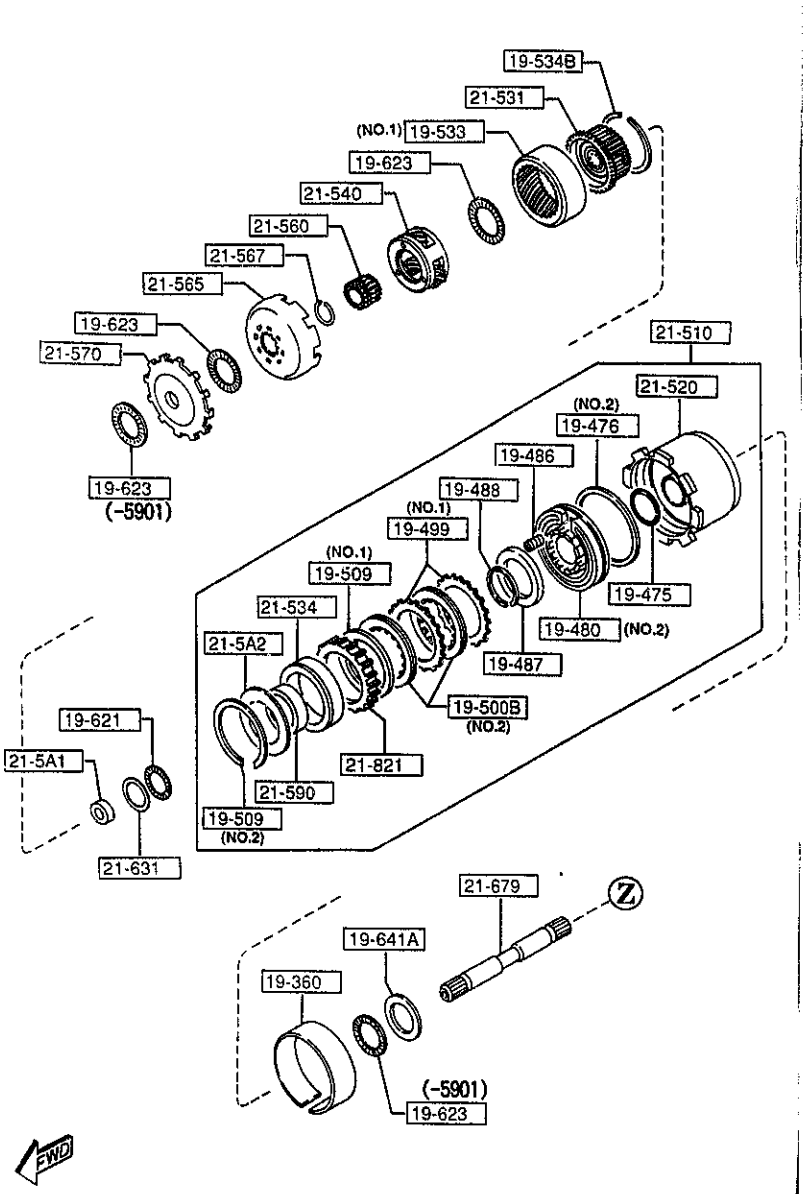
19-534B
21-531
(NO.1) 19-533
19-623
21-540
21-560
21-567
21-565
19-623
21-570
19-623
(-5901)
21-510
21-520
(NO.2) 19-476
19-486
19-488
(NO.1) 19-499
(NO.1) 19-509
21-534
21-5A2
19-475
19-480 (NO.2)
19-487
19-500B (NO.2)
21-821
21-590
19-509 (NO.2)
19-621
21-5A1
21-631
21-679
Ⓩ
19-641A
19-360
(-5901)
19-623
FWD
AUNA05

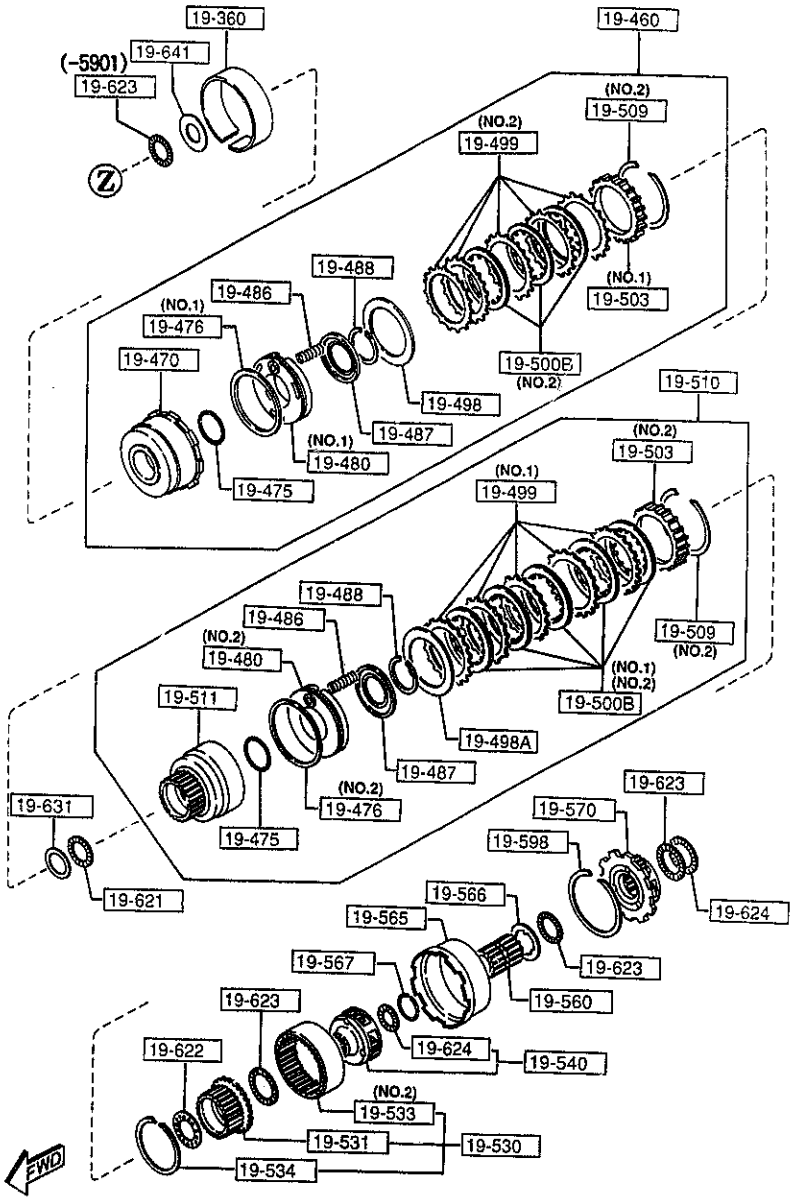
19-360
(-5901)
19-641
19-623
Ⓩ
19-460
(NO.2) 19-509
(NO.2) 19-499
(NO.1) 19-503
19-500B (NO.2)
19-488
19-486
(NO.1) 19-476
19-470
19-498
19-487
(NO.1) 19-480
19-475
19-510
(NO.2) 19-503
(NO.1) 19-499
19-488
19-486
(NO.2) 19-480
19-509 (NO.2)
(NO.1) (NO.2) 19-500B
19-511
19-498A
19-487
(NO.2) 19-476
19-475
19-631
19-621
19-623
19-570
19-598
19-624
19-566
19-565
19-623
19-567
19-560
19-623
19-624
19-540
19-622
(NO.2) 19-533
19-531
19-530
19-534
FWD
AUNA05

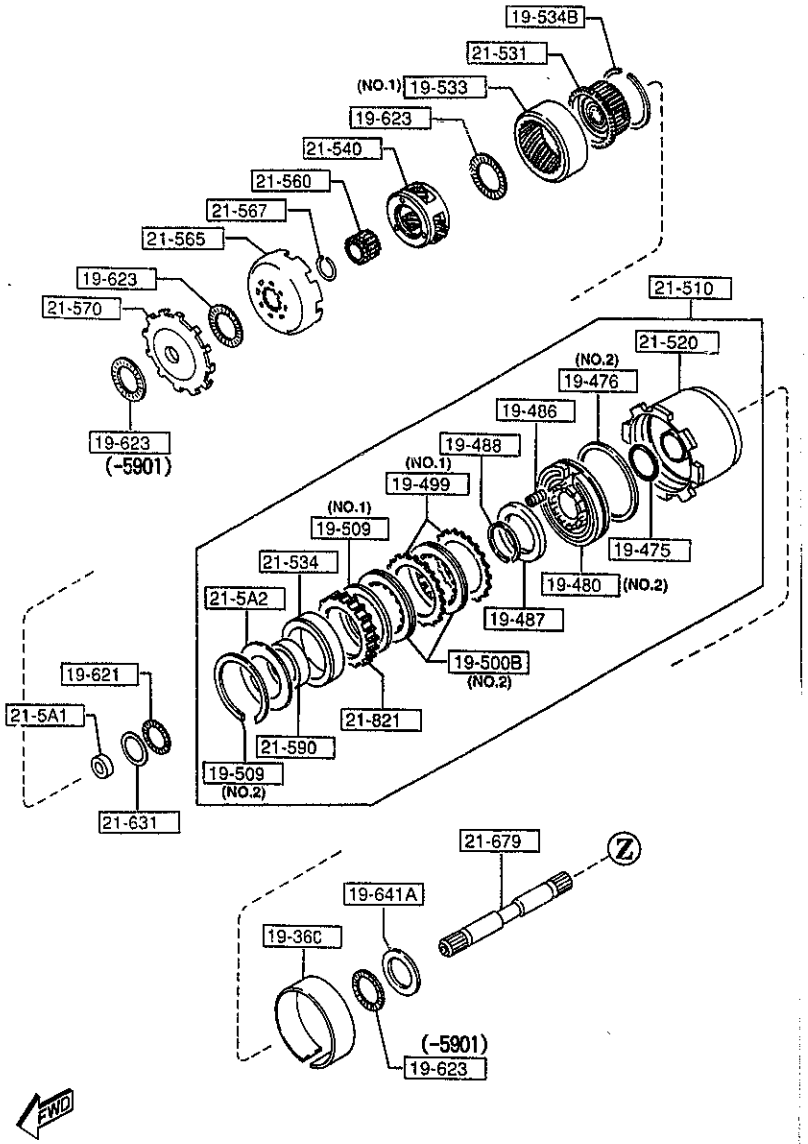

PART NO.	QTY	MODEL/RESTRICTION	MODEL/RESTRICTION	MODEL/RESTRICTION	FROM-TO
19-360		BAND,BRAKE			
0338-19-360B	2				
19-460		CLUTCH,FRONT			
N451-19-460	1				
19-470		DRUM,CLUTCH			
N451-19-470	1				
19-475		SEAL,'O'RING			
0338-19-475	3				
19-476		SEAL,LATHE CUT			
BV01-19-476	1	(ILLUST. NO.1)			
0338-19-476	2	(ILLUST. NO.2)			
19-480		PISTON,CLUTCH			
BV01-19-480	1	(ILLUST. NO.1)			
0338-19-480	2	(ILLUST. NO.2)			
19-486		SPRING,PISTON RETURN			
0338-19-486	25				
19-487		RETAINER SPRING			
0338-19-487	3				
19-488		RING,SNAP			
0338-19-488	3				
19-498		PLATE,DISHED			
0338-19-498	1				
19-498A		PLATE,DISHED			
BU17-19-498	1				
19-499		PLATE,DRIVEN			
FT01-19-499	7	(ILLUST. NO.1)			
0338-19-499	5	(ILLUST. NO.2)			
19-500B		PLATE,DRIVEN			

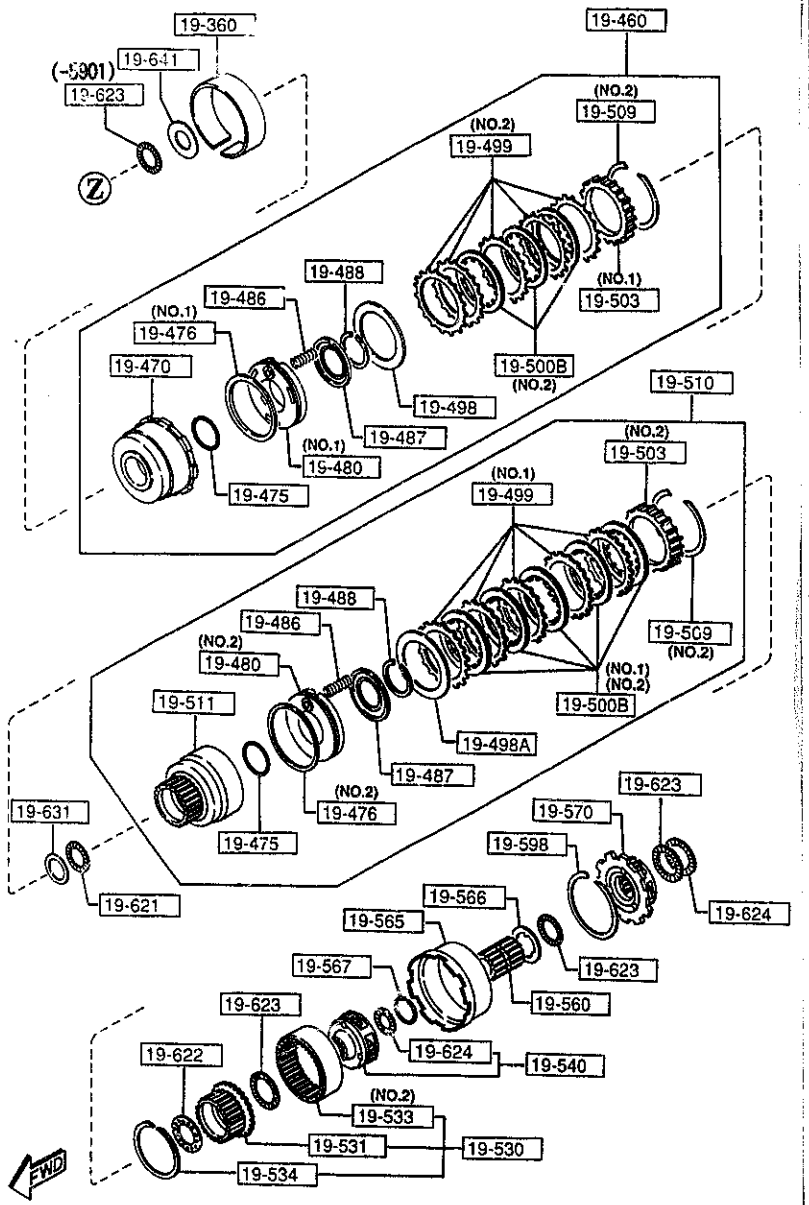

PART NO.	QTY	MODEL/RESTRICTION	MODEL/RESTRICTION	MODEL/RESTRICTION	FROM-TO
CONT'D					
BU55-19-5J0	5	SELECTIVE USE (ILLUST. NO.1)			
BU17-19-500A	10	SELECTIVE USE (ILLUST. NO.2)			
+---------+					
| 19-503 |		PLATE,RETAINING			
+---------+					
0338-19-503	1	T=10.2MM (ILLUST. NO.2)			
BU17-19-504	1	T=9.4MM (ILLUST. NO.2)			
BU17-19-505	1	T=9.6MM (ILLUST. NO.2)			
N451-19-505	1	T=6.4MM (ILLUST. NO.1)			
BU17-19-506	1	T=9.8MM (ILLUST. NO.2)			
BV02-19-506	1	T=6.6MM (ILLUST. NO.1)			
BU17-19-507	1	T=10MM (ILLUST. NO.2)			
BV02-19-507	1	T=6.8MM (ILLUST. NO.1)			
3959-19-507	1	T=5.8MM (ILLUST. NO.1)			
BU17-19-508	1	T=10.2MM (ILLUST. NO.2)			
BV02-19-508	1	T=7.0MM (ILLUST. NO.1)			
3959-19-508	1	T=6.0MM (ILLUST. NO.1)			
BU17-19-509	1	T=10.4MM (ILLUST. NO.2)			
3959-19-509	1	T=6.2MM (ILLUST. NO.1)			
+---------+					
| 19-509 |		RING,SNAP			
+---------+					
BV01-19-509	1	(ILLUST. NO.1)			
0338-19-509	3	T=2.0MM (ILLUST. NO.2)			
+---------+					
| 19-510 |		CLUTCH,REAR			
+---------+					
BU17-19-510A	1				
+---------+					
| 19-511 |		DRUM,REAR CLUTCH			
+---------+					
1758-[illegible]-511A	1				

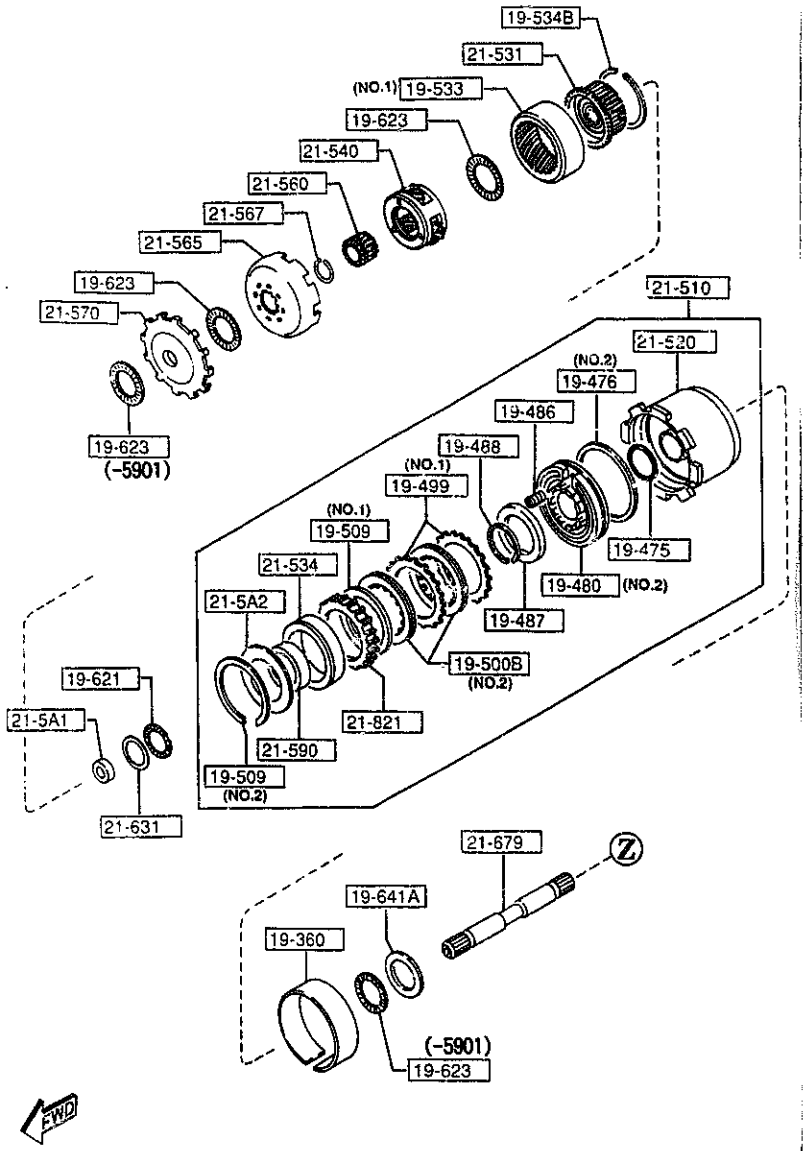

PART NO.	QTY	MODEL/RESTRICTION	MODEL/RESTRICTION	MODEL/RESTRICTION	FROM-TO
19-530		HUB,REAR CLUTCH			
0338-19-530	1				
19-531		HUB,REAR CLUTCH			
0338-19-531	1				
19-533		GEAR,INTERNAL			
BV01-19-533	1	(ILLUST. NO.1)			
0338-19-533A	1	(ILLUST. NO.2)			
19-534		RING,SNAP			
0338-19-534	1				
19-534B		RING,SNAP			
BU03-19-534	1				
19-540		CARRIER,FRONT			
0338-19-540	1				
19-560		GEAR,SUN			
0338-19-560	1				
19-565		SHELL,CONNECTING			
BU27-19-565	1				
19-566		RACE,SHELL BEARING			
0338-19-566	1	('95 MODEL)			
19-567		RING,SNAP			
0338-19-567	1				
19-570		CARRIER,REAR			
0338-19-570	1				
19-598		RING,SNAP			
0338-19-598	1				
19-621		BEARING,NEEDLE			
0338-19-621	2				

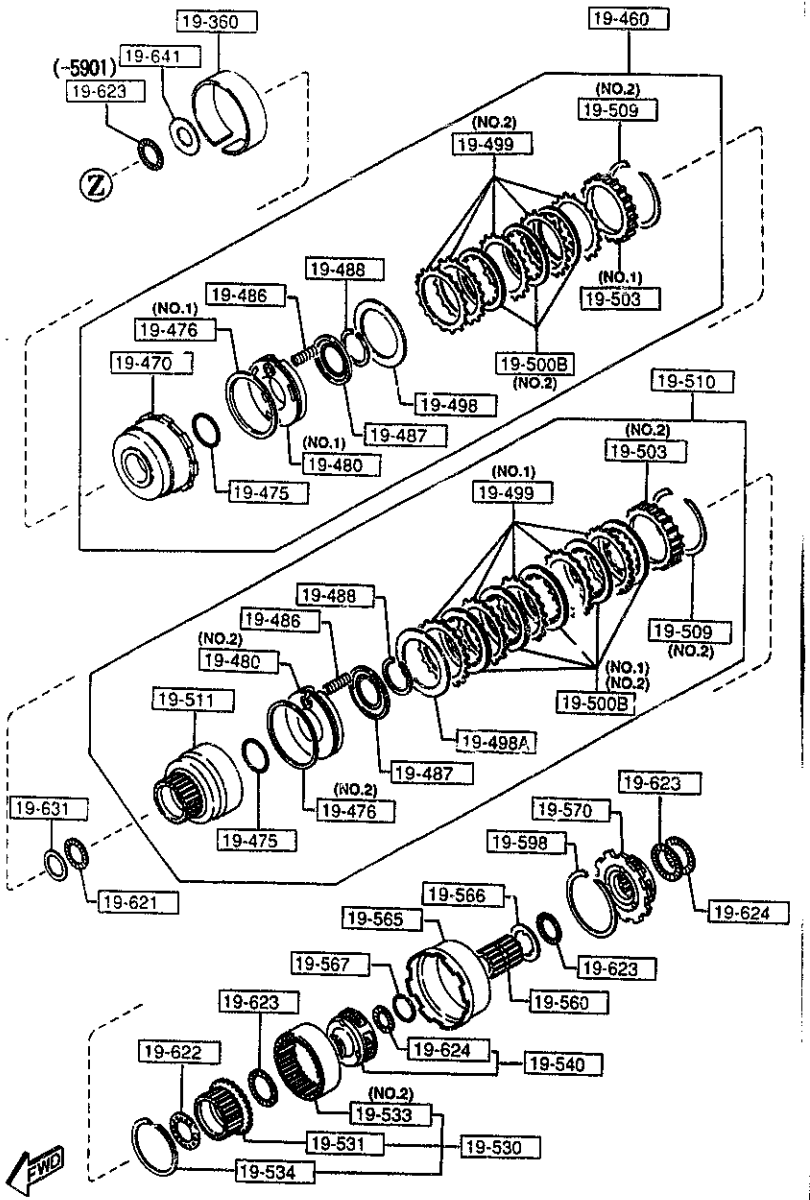

PART NO.	QTY	MODEL/RESTRICTION	MODEL/RESTRICTION	MODEL/RESTRICTION	FROM-TO
19-622		BEARING,NEEDLE			
BU91-19-622	1	D=34.7MM			
FT01-19-622	1	D=33.8MM			
19-623		BEARING,NEEDLE			
0338-19-623A	8				-5901
0338-19-623A	5				5901-
19-624		BEARING,NEEDLE			
0338-19-624	2				
19-631		RACE,BRG.PUMP COVER			
0338-19-631	1	T=1.2MM			
0338-19-632	1	T=1.4MM			
0338-19-633	1	T=1.6MM			
0338-19-634	1	T=1.8MM			
0338-19-635	1	T=2.0MM			
0338-19-636	1	T=2.2MM			
19-641		WASHER,FRONT CLUTCH			
BV01-19-6C1	1	T=0.8MM			
BV01-19-6C2	1	T=1MM			
BV01-19-6C3	1	T=1.2MM			
BV01-19-6C4	1	T=1.4MM			
BV01-19-6C5	1	T=1.6MM			
BV01-19-6C6	1	T=1.8MM			
BV01-19-6C7	1	T=2MM			
BV01-19-6C8	1	T=2.2MM			

5901 NA3** -702989

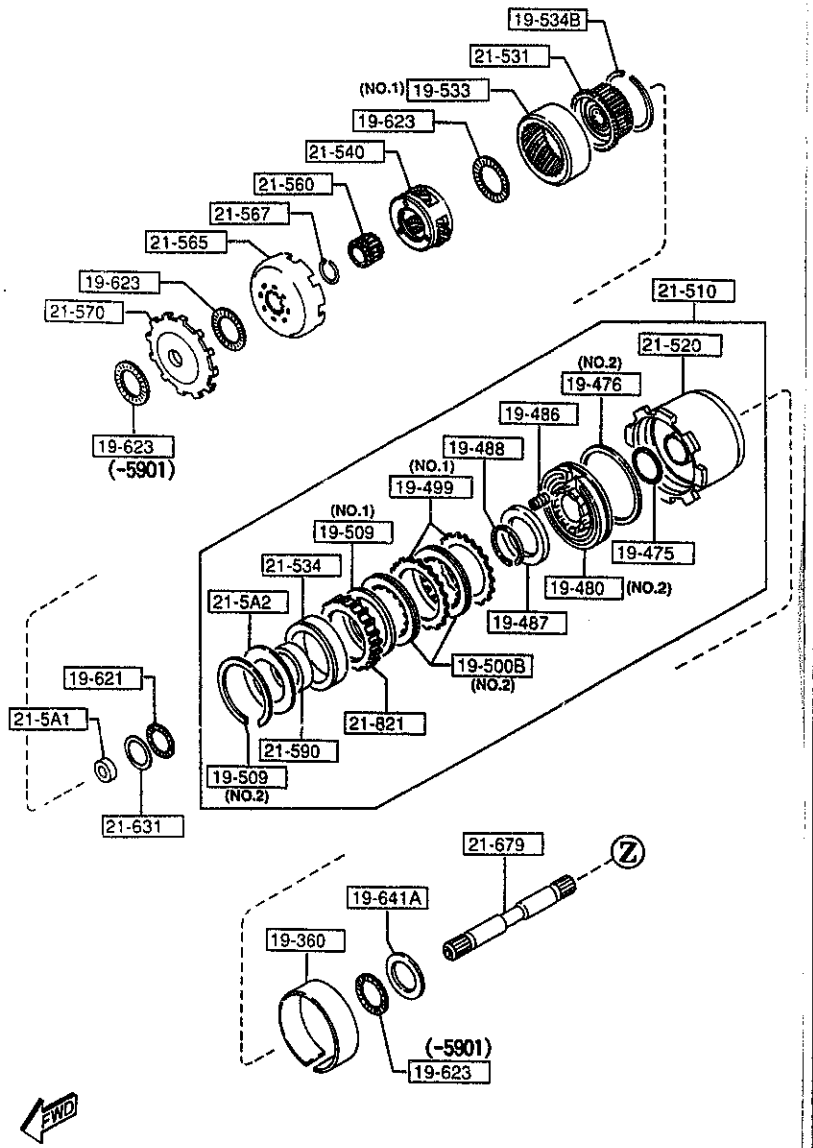

PART NO.	QTY	MODEL/RESTRICTION	MODEL/RESTRICTION	MODEL/RESTRICTION	FROM-TO
19-641A		WASHER			
BV03-19-6C1	1	T=0.8MM			
BV03-19-6C2	1	T=1MM			
BV03-19-6C3	1	T=1.2MM			
BV03-19-6C4	1	T=1.4MM			
BV03-19-6C5	1	T=1.6MM			
BV03-19-6C6	1	T=1.8MM			
BV03-19-6C7	1	T=2MM			
BV03-19-6C8	1	T=2.2MM			
21-5A1		SLEEVE,SEAL-O.D.CARRIER			
BV01-21-5A1	1				
21-5A2		RACE,SIDE-ONE WAY CLUTCH			
BV01-21-5A2	1	T=0.6MM			
BV01-21-5A3	1	T=0.8MM			
BV01-21-5A4	1	T=1MM			
BV01-21-5A5	1	T=1.2MM			
BV01-21-535	1	T=0.4MM			
21-510		CLUTCH,DIRECT			
BV01-21-510B	1				
21-520		DRUM,DIRECT			
BV01-21-530C	1				
21-531		HUB,O/DRIVE CLUTCH			
BV01-21-536	1				
21-534		RACE,OUTER-ONE WAY CLUTCH			
BV01-21-534	1				

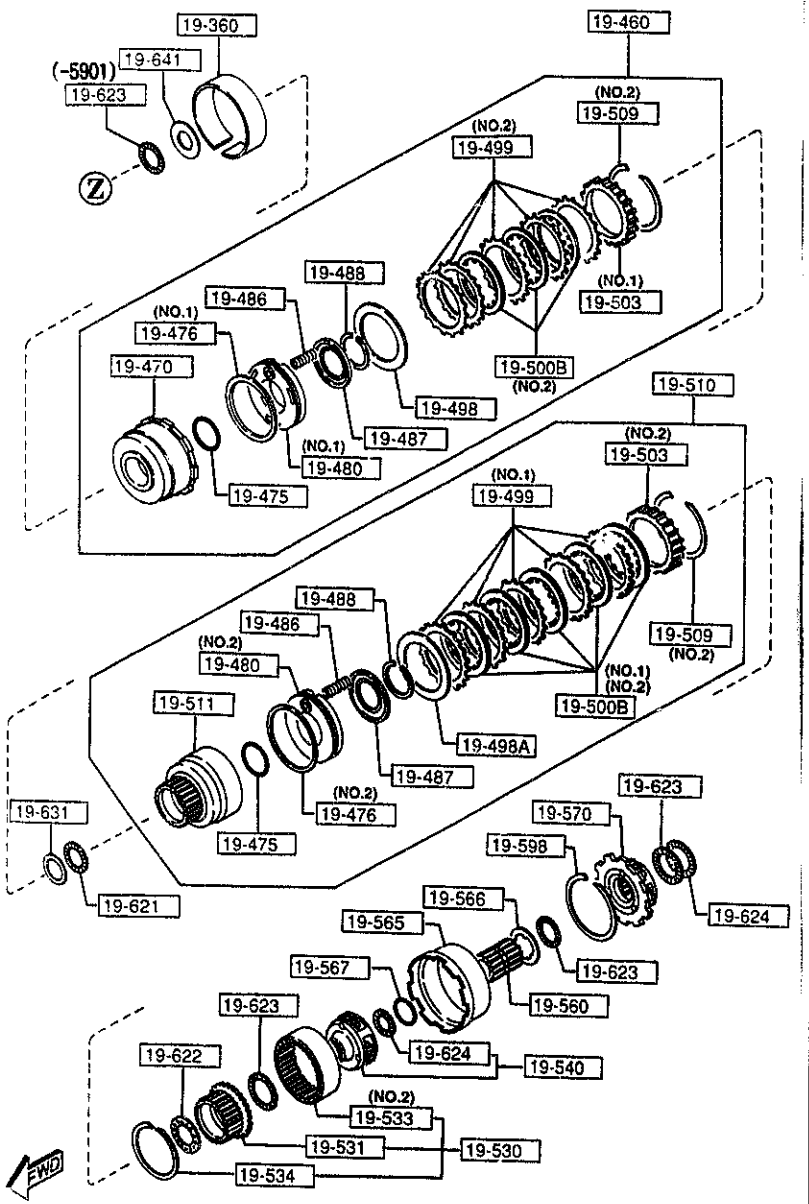

PART NO.	QTY	MODEL/RESTRICTION	MODEL/RESTRICTION	MODEL/RESTRICTION	FROM-TO
21-540		CARRIER,OVER DRIVE			
BV01-21-540B	1				
21-560		GEAR,OVER DRIVE			
BV01-21-560	1				
21-565		CONNECTING,SHELL			
BU03-21-565	1				
21-567		RING,SNAP			
BU03-21-567	1				
21-570		SUPPORT,CENTER			
BV01-21-570A	1				
21-590		CLUTCH,ONE WAY			
BV01-21-533	1				
21-631		RACE,BRG.HUB CLUTCH			
BU01-21-631	1	L=1.2MM			
BU01-21-632	1	L=1.4MM			
BU01-21-633	1	L=1.6MM			
BU01-21-634	1	L=1.8MM			
BU01-21-635	1	L=2.0MM			
BU01-21-636	1	L=2.2MM			
21-679		SHAFT,INTERMEDIATE			
BU01-21-679	1				
21-821		PLATE,RETAINING			
BV01-21-821A	1				

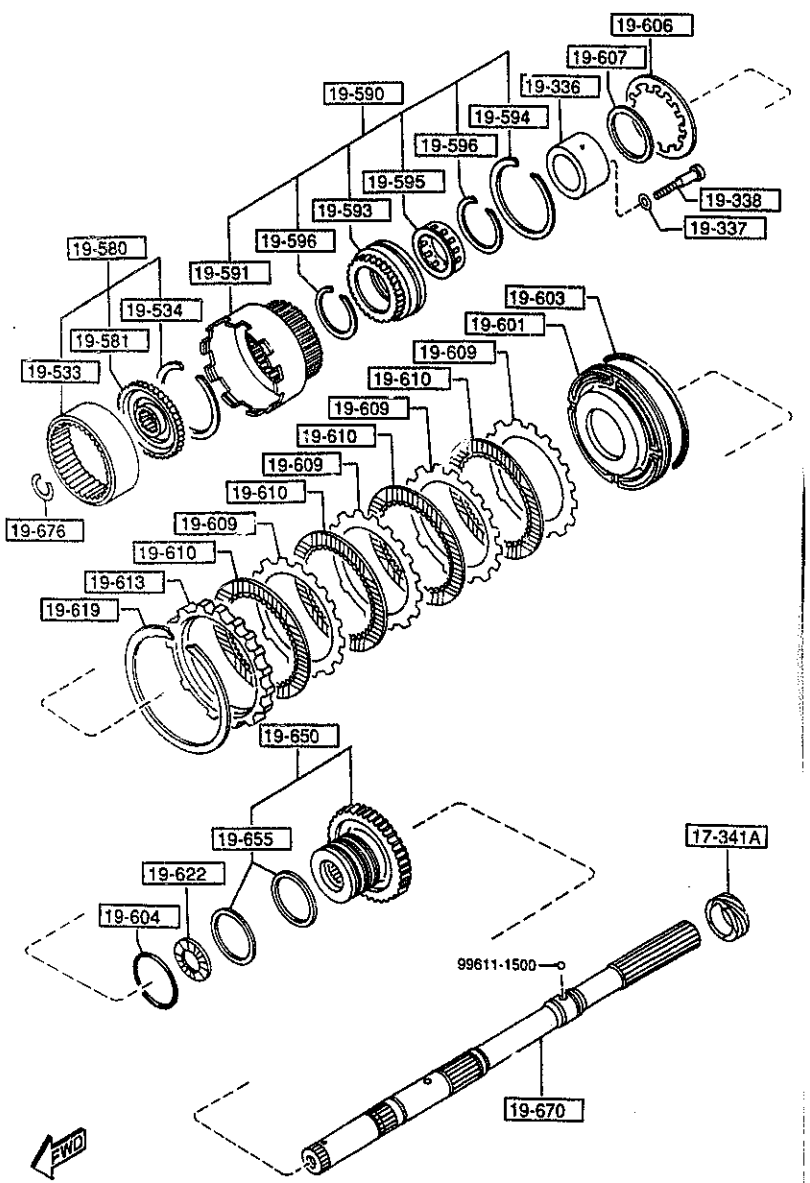

AUNA05

PART NO.	QTY	MODEL/RESTRICTION	MODEL/RESTRICTION	MODEL/RESTRICTION	FROM-TO
17-341A 1281-17-341	1	GEAR,SPEEDO.DRIVE			
19-336 0338-19-336	1	RACE,INNER			
19-337 0338-19-337	8	WASHER,PLAIN			
19-338 0338-19-338	8	BOLT			
19-533 0338-19-533A	1	GEAR,INTERNAL			
19-534 0338-19-534	1	RING,SNAP			
19-580 0338-19-580	1	FLANGE			
19-581 0338-19-581	1	FLANGE,DRIVE			
19-590 0338-19-590	1	DRUM,CONNECTING			
19-591 0338-19-591	1	DRUM,CONNECTING			
19-593 0338-19-593	1	RACE,OUTER			
19-594 0338-19-594	1	RING,SNAP			
19-595 0338-19-595	1	CLUTCH,ONE WAY			
19-596 0338-19-596	2	RING,SNAP			

CAT. AUNA05-04

1997-07

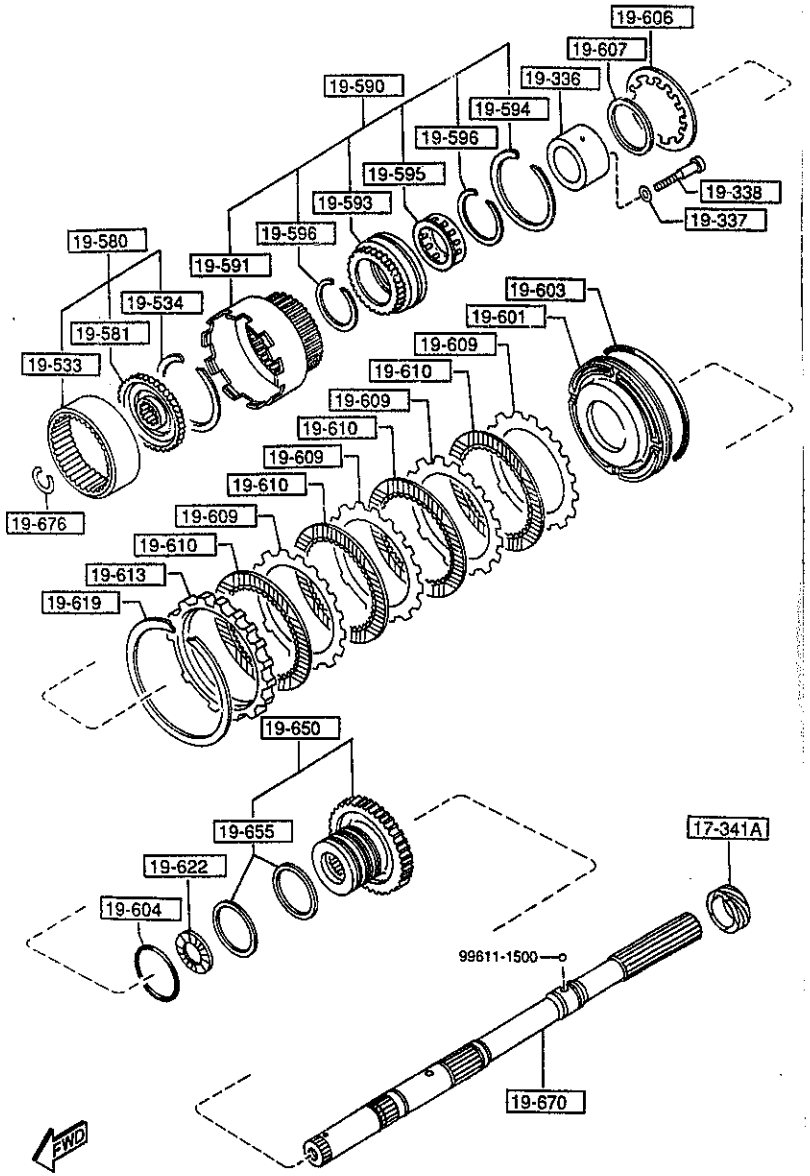

AUNA05

PART NO.	QTY	MODEL/RESTRICTION	MODEL/RESTRICTION	MODEL/RESTRICTION	FROM-TO
19-601		PISTON,LOW & REVERSE			
BT08-19-600	1				
19-603		SEAL,PISTON			
0338-19-603	1				
19-604		SEAL,'O'RING			
0338-19-604	1				
19-606		SPRING,PISTON			
0338-19-606	1				
19-607		RING,SNAP			
0338-19-607	1				
19-609		PLATE,DRIVEN			
0338-19-609	4				
19-610		PLATE,DRIVE			
BU17-19-610	4				
19-613		PLATE,RETAINING			
0338-19-613A	1	T=11.8MM			
0338-19-614A	1	T=12MM			
0338-19-615A	1	T=12.2MM			
0338-19-616A	1	T=12.4MM			
0338-19-617A	1	T=12.6MM			
0338-19-618A	1	T=12.8MM			
19-619		RING,SNAP			
0338-19-619	1				
19-622		BEARING,NEEDLE			
BU91-19-622	1	D=34.7MM			
FT01-19-622	1	D=33.8MM			

CAT. AUNA05-04

1997-07

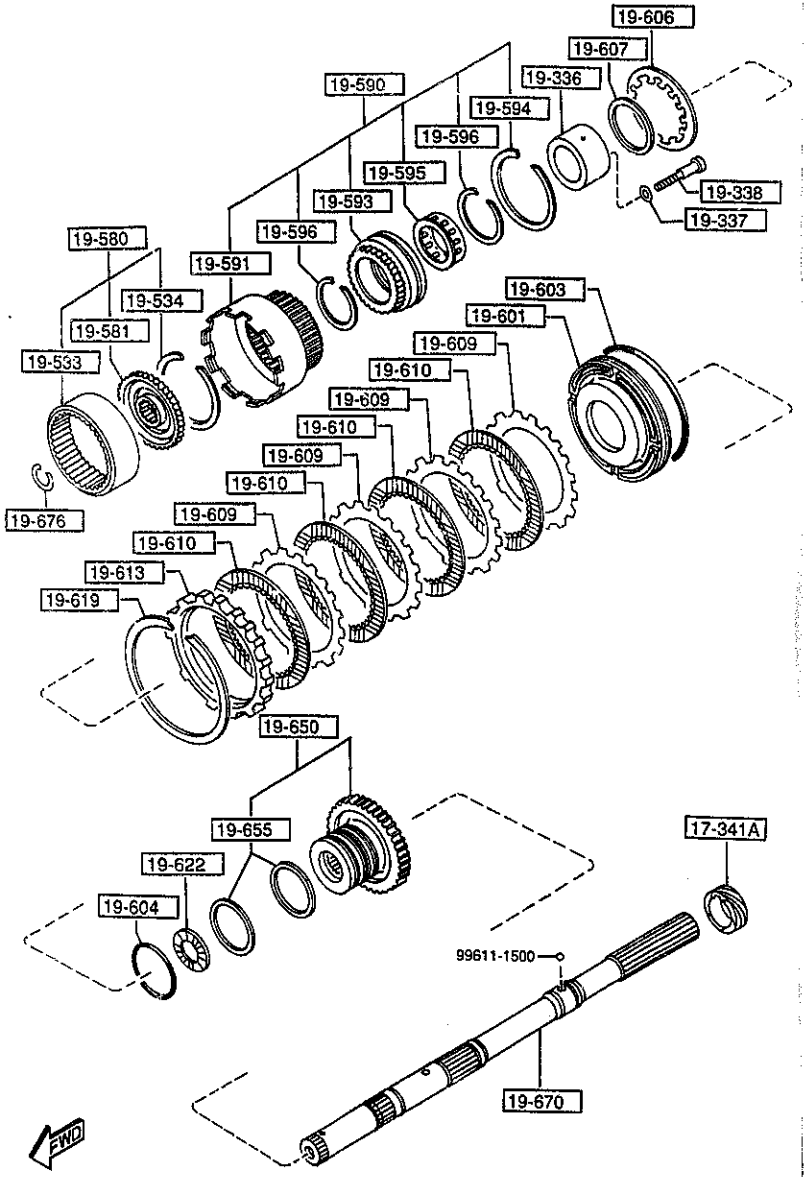

AUNA05

PART NO.	QTY	MODEL/RESTRICTION	MODEL/RESTRICTION	MODEL/RESTRICTION	FROM-TO
19-650 BV01-19-650	1	DISTRIBUTOR,OIL			
19-655 BV01-19-655	2	RING,SEAL			
19-670 BU55-19-670	1	SHAFT			
19-676 0338-19-676	1	RING			

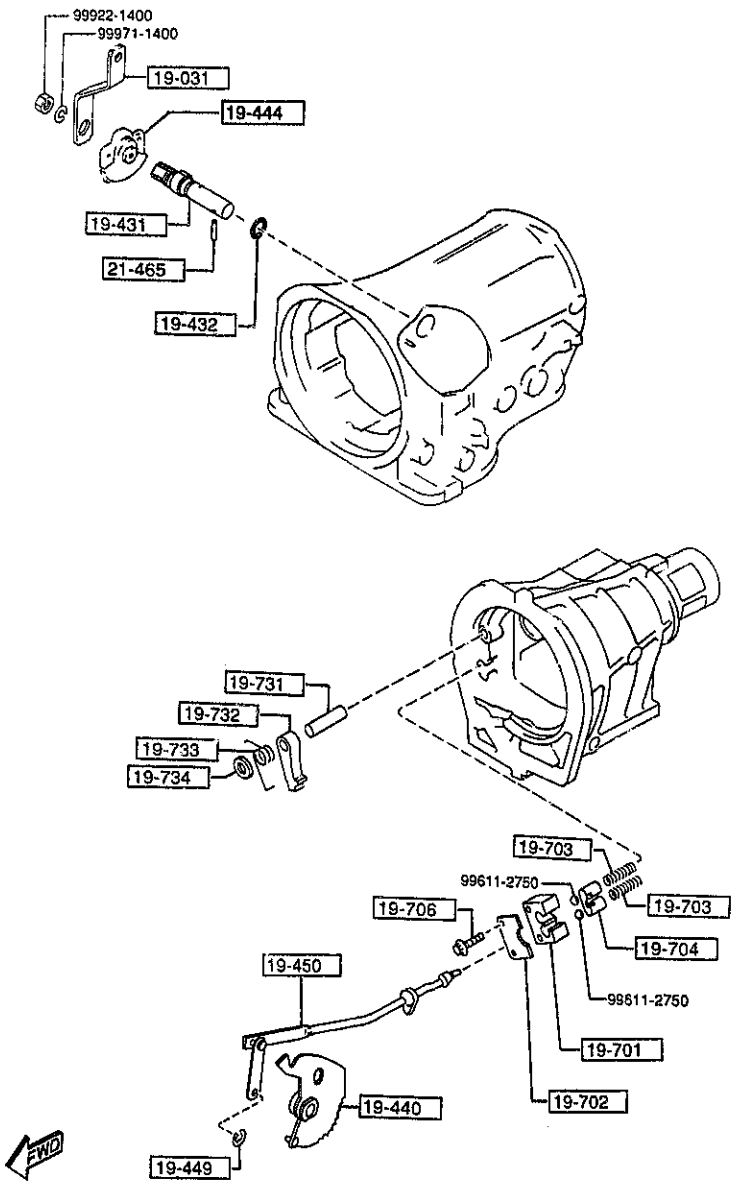

PART NO.	QTY	MODEL/RESTRICTION	MODEL/RESTRICTION	MODEL/RESTRICTION	FROM-TO
19-031 BU55-19-031	1	LEVER,SELECT			
19-431 BU67-19-431	1	SHAFT,MANUAL			
19-432 0338-19-432	1	RING,'O'			
19-440 BU56-19-440	1	PLATE,MANUAL			
19-444 N451-19-444	1	SWITCH,INHIBITOR			
19-449 0338-19-449	1	RING,SNAP			
19-450 BU17-19-450	1	ROD,PARKING			
19-701 BU17-19-701	1	SUPPORTER,ACTUATOR			
19-702 0338-19-702A	1	PLATE,RETAINING			
19-703 BU17-19-703	2	SPRING,BALL PARK			
19-704 BU17-19-704	1	RETAINER			
19-706 0338-19-706	1	BOLT			
19-731 0338-19-731	1	SHAFT,PARKING PAWL			
19-732 BU17-19-732	1	PAWL,PARKING			

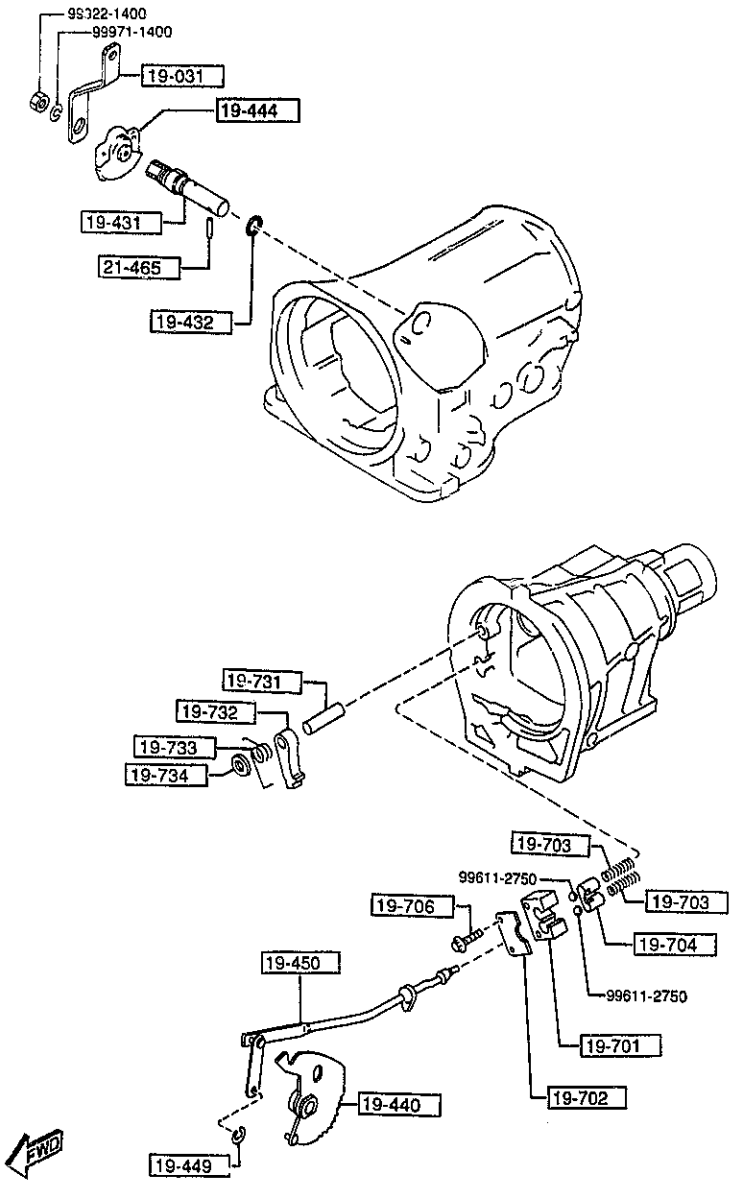

PART NO.	QTY	MODEL/RESTRICTION	MODEL/RESTRICTION	MODEL/RESTRICTION	FROM-TO
19-733 0338-19-733C	1	SPRING,PAWL RETURN			
19-734 0338-19-734A	1	SPACER,DOWEL			
21-465 BU67-21-465	1	PIN,SPRING-PARKING ROD			

1960 AUTOMATIC TRANSMISSION GASKET & SEAL KIT

22-900

1-SEAL, OIL	(1)	17-SEAL, LATHE CUT	(1)
2-GASKET, OIL PUMP	(1)	18-SEAL, PISTON	(1)
3-SEAL, OIL	(1)	19-SEAL, "O" RING	(1)
4-RING, SEAL	(4)	20-RING, SEAL	(2)
5-RING, SEAL	(2)	21-GASKET, EXTENTION	(1)
6-SEAL, CUT RING	(1)	22-SEAL, "O" RING	(1)
7-GASKET	(1)	23-GASKET, OIL PAN	(1)
8-SEAL, PISTON	(1)	24-GASKET, DRUM SUPPORT	(1)
9-SEAL, PISTON	(1)	25-RING, "O"	(1)
10-SEAL, PISTON	(1)	26-RING, "O"	(1)
11-SEAL, PISTON	(1)	27-RING, "O"	(1)
12-SEAL, LATHE CUT	(1)	28-GASKET, O/DRIVE CASE	(1)
13-RING, "O"	(1)	29-RING, "O"	(2)
14-RING, "O"	(1)	30-RING, "O"	(1)
15-RING, "O"	(1)	31-RING, "O"	(4)
16-SEAL, "O" RING	(3)		

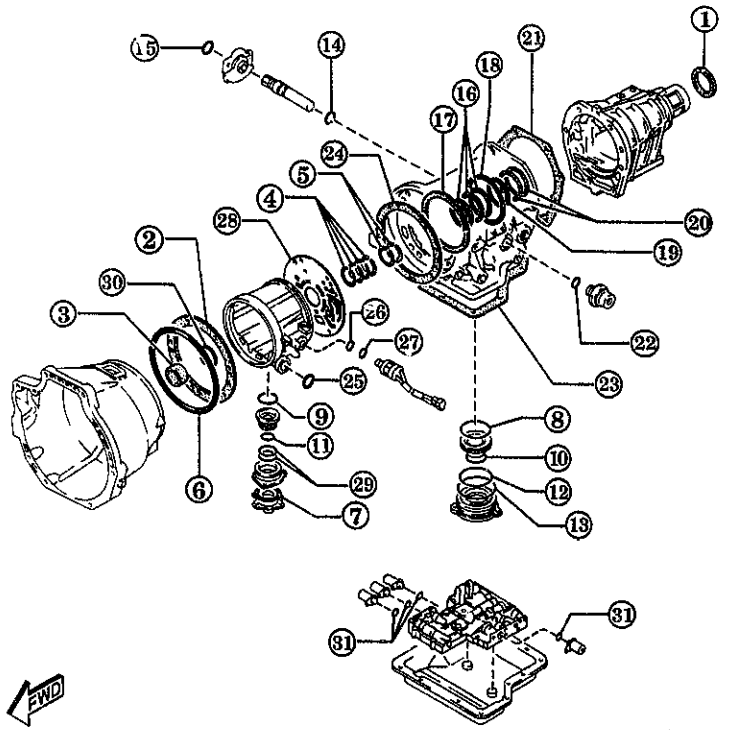

AUNA05

1960 -1 * AUTOMATIC TRANSMISSION GASKET & SEAL KIT

PART NO.	QTY	MODEL/RESTRICTION	MODEL/RESTRICTION	MODEL/RESTRICTION	FROM-TO
22-900		GASKET & SEAL KIT			
N451-22-900	1				

CAT. AUNA05-04

1997-07